12

1882.

NEW SOUTH WALES.

VOTES

AND

PROCEEDINGS

OF THE

LEGISLATIVE ASSEMBLY

DURING THE SESSION

OF

1882,

WITH THE VARIOUS DOCUMENTS CONNECTED THEREWITH.

IN FIVE VOLUMES.
VOL. V.

SYDNEY:
THOMAS RICHARDS, GOVERNMENT PRINTER, PHILLIP-STREET.

1882.

407—

1882.

LEGISLATIVE ASSEMBLY.

NEW SOUTH WALES.

VOTES AND PROCEEDINGS.

SESSION 1882.

(*IN FIVE VOLUMES.*)

TABLE OF CONTENTS.

VOL. V.

Title-page.

Table of Contents.

Index.

PAGE.

Letters of Registration of Inventions for 1879 1

Ditto ditto 1880 203

Exploration of the Caves and Rivers of New South Wales—Correspondence 551

1882.

LEGISLATIVE ASSEMBLY.

NEW SOUTH WALES.

INDEX

TO THE

VOTES AND PROCEEDINGS

AND

PAPERS LAID UPON THE TABLE

DURING THE SESSION

1882.

(FIVE VOLUMES.)

REFERENCES TO THE VOTES AND PROCEEDINGS, VOL. 1—SESSION 1882.	PAPERS. VOL.	PAGE.
A		
ABORIGINES:—		
Report of Protector, laid on Table, 18	4	1525
ACCOUNTS, PUBLIC (See "FINANCE.")		
ADDRESSES:—		
IN REPLY TO GOVERNOR'S OPENING SPEECH:—		
Motion made (*Mr. Sydney Smith*) for Select Committee to prepare, 3; brought up and read by Clerk, 4; Motion made (*Mr. Sydney Smith*), for adoption of, and amendment moved, 4; debate adjourned, 4; resumed, 5; adjourned, 6; resumed, 8; amendment on the amendment moved, 8; debate adjourned, 8; resumed, 10; amendment on the amendment negatived, 10; amendment negatived, 11; original motion passed, 11; presented to Governor and Governor's reply reported by Speaker, 13.		
THE EGYPTIAN WAR:—		
Motion made (*Sir John Robertson*), that joint Address be telegraphed to the Queen on the success of the British Arms, and that a Message be sent to the Council inviting its concurrence, 72; Motion made (*Sir John Robertson*), that a deputation accompany the Speaker to present the Address to the Governor, with a request that he would forward it to the Secretary of State for the Colonies for presentation to Her Majesty, 72; Message to Council, 75; Message from Council agreeing, 77; Speaker reports presentation of Address to Governor, 79; Governor's reply, 79.		
REGISTER OF:—		
Alphabetical	1	269
ADJOURNMENT:—		
OF THE HOUSE:—		
Motion made for and passed, 132, 190, 206.		
Motion made for and negatived, 31, 37, 43, 59, 73, 81, 86, 98, 101, 164, 199.		
For want of a quorum after commencement of business, 14.		
Special, 31, 82, 133, 171, 192.		
OF DEBATE:—		
Motion made for and passed, 4, 6, 8, 22, 27, 31, 47, 55, 88, 110, 185, 194, 198, 202.		
ADMINISTRATION OF JUSTICE:—		
THE PRISONER PLOMER:—		
Motion made (*Mr. Buchanan*) for copies of depositions and all other papers in the case of, who was convicted of rape; and negatived, 27.		
Report of His Honor Mr. Justice Windeyer on the case, laid on Table and not ordered to be printed, 71.		
MR. OLIVER SAUNDERS:—		
Motion made (*Mr. Joseph P. Abbott*) for copies of complaints made in reference to the conduct of, a Justice of the Peace at Cassilis, 72; Return to Address, laid on Table, 131	2	77
MR. RICHARD YETMAN HOLMES:—		
Motion made (*Mr. Joseph P. Abbott*) for copies of papers with respect to the stealing and illegally using of a bullock by, the property of Mr. George Dines, 72.		
THE QUEEN *v.* OWEN:—		
Motion made (*Dr. Ross*) for copies of complaints, depositions, &c., in case of, at Molong, 90; Return to Address, laid on Table, 139	2	85

REFERENCES TO THE VOTES AND PROCEEDINGS, VOL. I—SESSION 1882.	PAPERS. VOL.	PAGE.
A		
ADMINISTRATION OF JUSTICE (*continued*) :—		
STEPHEN MURPHY :—		
Motion made (*Mr. William Forster*) for copies of correspondence, minutes, &c., having reference to case of, in a matter of litigation, 117; Return to Address laid on Table, 197; ordered to be printed, 201	2	99
CHARLES WAUDBY :—		
Motion made (*Mr. William Forster*) for copies of correspondence, minutes, &c., having reference to the death of the infant child of, and negatived, 118; Correspondence laid on Table, 139 ...	2	93
THE REV. CHARLES CURRY :—		
Motion made (*Mr. McElhone*) for copies of correspondence in reference to an alleged miscarriage of justice, 181.		
ADULTERATION OF WINES, BEERS, AND SPIRITS :—		
Correspondence respecting alleged, laid on Table, 71	2	1327
AGENTS FOR CONDITIONAL PURCHASES, APPLICATIONS BY (See "CROWN LANDS.")		
AGRICULTURAL SOCIETIES :—		
Motion made (*Mr. Wilson*) in favour of Government Grant of £1 for £1 on the receipts of the Societies, and by leave withdrawn, 151.		
AGRICULTURAL SOCIETY, SYDNEY :—		
Letter from Town Clerk respecting the occupation of portion of Sydney Common by, laid on Table and not ordered to be printed, 101.		
ALBURY GAS COMPANY'S BILL.		
Petition presented (*Mr. Day*) for leave to bring in, 145; leave given, 150; read 1°, 151; referred to Select Committee, 155; Report brought up, 184	4	1483
ANIMALS PROTECTION BILL :—		
Motion made (*Mr. H. C. Dangar*) for leave to bring in, 21; read 1°, 21; Order of the Day postponed, 87, 132; Order of the Day discharged, and Bill withdrawn, 199.		
ANSWERS TO QUESTIONS :—		
Sessional Order passed, 20.		
APPLICATIONS BY AGENTS FOR CONDITIONAL PURCHASES (See "CROWN LANDS.")		
APPRAISEMENT OF RUNS (See "RUNS.")		
ARCHITECTURAL BRANCH OF THE DEPARTMENT OF PUBLIC INSTRUCTION :—		
Return respecting laid on Table, 96	2	799
ARDILL, MR. JOHN ROCHE :—		
Petition from, respecting removal of his name from the list of Licensed surveyors, presented, 164.	4	1597
ARMIDALE :—		
Motion made (*Mr. Copeland*) for copies of correspondence in connection with the appointments of Licensing Magistrates at, 9; Return to an Order laid on Table, 98	2	1317
ARMSTRONG, CAPTAIN (See "LORD HOWE ISLAND.")		
ART GALLERY (See also "LORD'S DAY, OBSERVANCE OF") :—		
Motion made (*Mr. Copeland*) in favour of opening on Sunday afternoons, and debate adjourned 22; resumed and adjourned, 27; Order of the Day postponed, 31; resumed and motion resolved in the affirmative, 87.		
Petition from Newcastle against opening of on Sunday, presented, 63	4	1609
Do. Revd. George Martin, President of the New South Wales and Queensland Wesleyan Conference, against opening of on Sunday, presented, 81	4	1607
Do. Residents of City of Newcastle in favor of opening on Sunday, presented, 86	2	925
Do. do. Armidale do. do. 86	2	925
Do. do. Sydney do. do. and read by Clerk, 86	2	925
Motion made (*Mr. Copeland*) for return showing cost of works of Art in, and in the Garden Palace, 63.		
Motion made (*Sir Henry Parkes*) in favour of the site lately occupied by the Garden Palace, as site for, 109; point of order, 110; amendment proposed and debate adjourned, 110; debate resumed, proposed amendment negatived by casting vote of Speaker, and original motion negatived, 124.		
Correspondence respecting presentation to the Government by T. Woolner, Esquire, of "Turner's London—Autumnal Morning," laid on Table, 131	2	927
ARTILLERY PERMANENT FORCES, VOLUNTEER AND :—		
Motion made (*Mr. Copeland*) respecting appointments and promotions in, and the absence on leave of Colonels Richardson and Roberts, 113.		
ASHBURNHAM, EXPENDITURE ON PUBLIC WORKS IN THE COUNTY OF :—		
Motion made (*Dr. Ross*) for return of, from 1861 to 30 June, 1882, 25.		
ASHFIELD, LAND TAKEN BY THE BOROUGH OF, FROM MR. HENRY HALLORAN :—		
Return to Order (*Session* 1881) laid on Table, 19	4	833
ASHFIELD, LAND AT, SOLD TO MR. JOHN S. JAMIESON :—		
Correspondence laid on Table, 19	4	1585
ASSEMBLY :—		
Clerk reads Proclamation of Governor on opening of Session, 1.		
Clerk reads Address in reply to Governor's Opening Speech, 4.		
Clerk reads Petition, 17, 25, 50, 86, 113, 123, 201.		
Clerk reads Deputy Speaker's Commission to administer the Oath, 13.		
Clerk swears Members of Elections and Qualifications Committee, 31, 50, 59, 77.		
Clerk reads Report of Committee of Elections and Qualifications, 96.		
Usher of Black Rod delivers Message from Governor, 2.		
Speaker reports attendance of House in Council Chamber to hear Opening Speech, 2.		
Speaker reports presentation of Address in reply to Governor's Opening Speech, and Governor's reply thereto, 13.		
Speaker lays on Table Warrant appointing Elections and Qualifications Committee, 7; withdrawn, 9; Warrant in substitution, 11; maturity reported, 31.		
Speaker lays on Table Minute authorizing application of Balances, 2, 192	4	589, 591
Speaker lays on Table Abstract of Public Accounts for 1881, 2	4	469
Speaker reports Deputy Speaker's Commission to administer the Oath, 13.		
Speaker appoints first Meeting of the Elections and Qualifications Committee, 50.		
Speaker gives casting vote, 124.		
Speaker's rulings, 96, 98, 110, 114, 199.		
Points of Order, 96, 110, 199.		
Election of Angus Cameron, Esq., as Chairman of Committees, 5.		
Governor's Opening Speech, 2.		
Address in reply to Governor's Opening Speech, 3, 4, 5, 8, 10, 11, 13.		
Chairman reports Point of Order on Bill, 96.		

REFERENCES TO THE VOTES AND PROCEEDINGS, VOL. I—SESSION 1882.	PAPERS. VOL.	PAGE.
A		
ASSEMBLY (*continued*) :—		
Sessional Orders passed, 19, 20, 21.		
Sittings after midnight, 38, 82, 87, 124, 139.		
Orders of the Day discharged, 50, 114, 132, 151, 199.		
Bills withdrawn, 50, 114, 151, 199.		
Bills recommitted, 139, 145, 165, 185.		
Bill reported with an amendment in the Title, 50.		
No Report from Committee of the Whole on Bill, 31, 98.		
Progress reported from Committee of the Whole on Bill, 98.		
No Quorum, 14.		
No Tellers on Division, 151, 169.		
Pro formâ Bill presented and read 1°, 2.		
Special adjournment, 31, 82, 133, 171, 192.		
Special adjournment on death of Member, 133, 171.		
Previous Question, 73.		
Contingent amendment, 66.		
Ministerial statement, 159.		
J. S. Farnell, Esq., as Chairman for the day only, 31, 81.		
Motion made to postpone notice of motion, 51.		
Vacant Seats, 83, 153, 176.		
Issue and Return of Writs, 1, 153.		
Death of Alfred John Pechey, Esq., reported, 1.		
Members sworn, 2, 15, 171.		
Privilege : Seat of John Mitchell Purves, Esquire, 9 ; Report brought up, 96	1	279
Bar of the House : Petition presented for leave to be heard by Counsel, 17 ; leave given, 31 ; Counsel admitted, 55.		
Bills of last Session proceeded with in terms of the 65th Standing Order, 2, 17 (2).		
Address to the Queen on the success of the British Arms in Egypt, 72, 75, 77, 79.		
Member of Council, witness before Select Committee of Assembly, 101, 105.		
New Houses of Parliament, 117.		
Member's name substituted for that of another on Select Committee, 199.		
Mr. Baker's Petition, 201	1	297
Business undisposed of at the close of the Session		211
Attendances of Members in Divisions and Counts-out during the Session		215
Business of the Session		217
Weekly Reports of Divisions in Committee of the Whole, Nos. 1 to 8		219
Weekly Abstracts of Petitions received, Nos. 1 to 12		243
Alphabetical Registers of Bills		267
Alphabetical Registers of Addresses and Orders		269
Standing and Select Committees appointed during the Session		275
Proclamation proroguing		207
Proclamation dissolving		209
ASYLUMS, GOVERNMENT (See "GOVERNMENT ASYLUMS" ; also "LUNATIC ASYLUMS.")		
AUSTRALIAN AGRICULTURAL COMPANY :—		
Petition from residents of Liverpool Plains and Northern Districts, in favour of the Report of Select Committee on roads through lands granted to, presented, 7	2	1337
Do. do. do. do. 9	2	1337
Do. from Jesse Gregson, praying for leave to be heard at Bar of the House, in opposition to the Report of the Select Committee, presented, 17 ; motion made (*Mr. Burns*) that the prayer of the Petition be granted, 31 ; motion made (*Mr. Burns*) that Charles James Manning, Esq., Counsel, learned in the law, be heard at the Bar, 55 ; Charles James Manning, Esq., addressed the House at the Bar, 55 ; motion made (*Mr. Joseph P. Abbott*) for adoption of Report of Select Committee on Roads through lands granted to, of last session, and debate adjourned, 55 ; Order of the Day postponed, 98, 132, 169, 199	2	1339
Correspondence respecting roads through the Company's Estate at Warrah, laid on Table, 131	2	1345
B		
BAKER, MR. EZEKIEL ALEXANDER :—		
Petition from, praying the House to rescind the resolution passed on the 8th November, 1881, declaring that he had been guilty of conduct unworthy of a Member of the House, and praying to be heard by Counsel at the bar, presented, and read by Clerk, 201	1	297
BALLOTING FOR SELECT COMMITTEES :—		
Sessional order passed, 20.		
BANK LIABILITIES AND ASSETS :—		
For quarter ended 31 December, 1881, laid on Table, 18	4	601
Do. 31 March, 1882, do. 18		603
Do. 30 June, 1882, do. 18		605
Do. 30 September, 1882, do. 192		607
BARDWELL, MRS. (See "EDUCATION.")		
BAR OF THE HOUSE :—		
Petition from Jesse Gregson, General Superintendent of the A. A. Company, praying to be heard by Counsel at, in opposition to the adoption of the Report of the Select Committee on "Lands granted to the Australian Agricultural Company," presented, 17 ; motion made (*Mr. Burns*) that the prayer of the Petition be granted, 31 ; Counsel heard, 55	2	1339
BARRISTERS ADMISSION BILL :—		
Motion made (*Mr. Slattery*) for leave to bring in 21, read 1°, 21, read 2°, and committed 31, further considered in Committee, reported with amendments and report adopted, 51 ; read 3°, and sent to Council, 55 ; returned without amendment, 90 ; assent reported, 109.		
BATAVIA :—		
Despatch respecting proposed Postal Convention with New South Wales, laid on Table, 18	4	1085
BATHURST :—		
Notification of land resumed for site for gaol, laid on Table, 123	4	1395
Notification of land resumed for water supply, laid on Table, 150	2	1421
BATHURST PRESBYTERIAN CHURCH GRANT RESUMPTION BILL :—		
Motion made (*Mr. Suttor*) for Committee of the Whole, 165 ; House in Committee and Resolution agreed to, 170 ; Message from Governor, 176 ; presented and read 1°, 177	4	1619

REFERENCES TO THE VOTES AND PROCEEDINGS, VOL. 1—SESSION 1882.	PAPERS. VOL.	PAGE.
B		
BEERS, WINES, AND SPIRITS (See "WINES, BEERS, AND SPIRITS.")		
BENEVOLENT ASYLUM :—		
Paper respecting recommendation by the Hon. John Sutherland of site of, for railway purposes laid on Table, 150	4	1359
BENNETT, MRS. (See "O'MALLEY *v.* ABLE AND HILLS.")		
BERMAGUI ("See YOUNG, MR. LAMONT.")		
BILLS :—		
Withdrawn, 50, 114, 151, 199.		
Recommitted, 139, 145, 165, 185.		
Registers of	1	267
BINGERA :—		
Motion made (*Mr. W. R. Campbell*) for Return showing business transacted at Land Office during 1881, and the first eight months of the present year, 7.		
BLACK ROD :—		
Usher of delivers Message from Governor, 2.		
BLANDFORD PROPRIETARY SCHOOL BILL :—		
Petition presented (*Mr. Burns*), for leave to bring in, 113 ; leave given, and read 1°, 117 ; referred to Select Committee, 123 ; Report brought up, 164	2	857
BLUE BOOK FOR 1881 :—		
Laid on Table, 18	3	1
BONDI (See "TRAMWAYS.")		
BOTANIC GARDENS (See "SEEDS AND PLANTS DISTRIBUTED")		
BRANDS AND STOCK BRANCH OF THE DEPARTMENT OF MINES :—		
Report for 1881 laid on Table, 19	2	1373
BRIDGES :—		
LAND RESUMED FOR AT CONCORD :—		
Notification of, laid on Table, 18	2	1371
PYRMONT :—		
Motion made (*Mr. Abigail*) for copies of minutes, letters, &c., having reference to the resumption of, by the Government, 30.		
TO CONNECT SYDNEY WITH NORTH SHORE :—		
Motion made (*Mr. Byrnes*) for copies of correspondence, &c., having reference to the erection of, 145.		
BROWN, H. H. & CO. (See "CROWN LANDS.")		
BROWN, THE HONORABLE STEPHEN CAMPBELL, M.L.C. :—		
Special adjournment of House on death of, 133.		
BROWN, MESSRS. J. AND A. (See "MINING.")		
BUSINESS DAYS :—		
Sessional order passed, 19.		
BUSINESS OF THE SESSION :—		
Paper showing	1	217
BY-LAWS :—		
LAID ON TABLE :—		
Public Vehicles Regulation Act, 17	4	1017
Sydney Hospital, 18	2	1141
Wallsend, 18		913
Do. amended, 18		919
Waratah, 18		887
Do. amended, 18		893
Lambton, 18		901
Do. amended, 18		907
Plattsburg, 18		869
Do. amended, 18		877
Parramatta, 18		965
Glen Innes, 18 (2)		931, 933
Leichhardt, 18		963
Windsor, 18		971
Yass, 18		929
Nowra, 18		955
Victoria, 18		969
Manly, 18	4	925
Burwood, 18		927
Bourke, 18.		957
Molong, 18.		935
Campbelltown, 59		941
Petersham, 63		967
Tenterfield, 128		885
Newcastle (Nuisances Prevention Act), 18		1009
Waverley (do.), 18		1011
Goulburn (Municipalities, Nuisances Prevention, and Goulburn Cattle Sale-yards Acts), 18		999
The Glebe (Municipalities, and Nuisances Prevention Acts), 18		989
Liverpool Free Public Library, 19.		1013
Glebe Free Library, 19.		1015
Redfern (Municipalities, and Nuisances Prevention Acts), 77		977
Bourke (Nuisances Prevention Act), 106		961
Dubbo (do) 106		975
University of Sydney, 19, 86.	2	829, 841
C		
CAMERON, ANGUS, ESQUIRE :—		
Election of, as Chairman of Committees, 5.		
Commission to, as Deputy Speaker, 13.		
"CAMPERDOWN" (See "IMMIGRATION.")		
CASTNER, MR. :—		
Copy of contracts and agreements entered into with, and other persons, for supply of gas for railway purposes, laid on Table, 123	4	1353
CASTING VOTE OF SPEAKER :—124.		
CAVES AND RIVERS OF NEW SOUTH WALES :—		
Correspondence, &c., relating to exploration of, laid on Table, 19	5	

REFERENCES TO THE VOTES AND PROCEEDINGS, VOL. 1—SESSION 1882.	PAPERS. VOL.	PAGE.
C		
CEMETERY :—		
COLLEY BLUE :—		
Notification of land resumed for, laid on Table, 18 (2)	4	1401, 1403
COOLAC :—		
Return to Order (*Session* 1881), laid on Table, 19	4	1367
CENSUS, 1881 :—		
Summary Tables, laid on Table, 17	3	227
CHAIRMAN OF COMMITTEES :—		
Election of Angus Cameron, Esq., 5 ; Commission to, as Deputy-Speaker, 13.		
Deputy (*James Squire Farnell, Esq.*), 31, 81.		
Reports Point of Order from Committee of the Whole, 96.		
Reports progress from Committee of the Whole, 98.		
CHALLENGE OF JURORS IN FELONY AND MISDEMEANOUR AMENDMENT BILL (See "RIGHT OF CHALLENGE OF JURORS IN FELONY AND MISDEMEANOUR AMENDMENT BILL.")		
CHAPLAINS, GAOL (See "GAOLS.")		
CHARITIES :—		
Sixth Annual Report of Inspector, laid on Table, 43	2	1015
CHIEF INSPECTOR OF STOCK :—		
Motion made (*Mr. Farnell*) for copies of Correspondence, &c., relative to any complaint of the Chairman of the Board of Sheep Directors in the Young District against, 155.		
CHRISTIE *v.* HOSKINS :—		
Return to Address (*Session* 1881), laid on Table, 18	2	427
CIRCULAR QUAY :—		
WHARFAGE AND TONNAGE DUES :—		
Return showing amount received for, from 1877 to 1882, laid on Table, 55	4	1407
RAILWAY EXTENSION TO :—		
Motion made (*Mr. Pigott*) in favour of, and negatived, 118.		
MANAGEMENT OF, BY COLONIAL TREASURER :—		
Motion made (*Mr. Garvan*) for Select Committee to inquire into and report upon charges made by Mr. Garvan against, 199 ; Amendment moved (*Sir Henry Parkes*), that the motion should state the charges specifically, 199 ; Speaker ruled that the motion was not in order, on the ground that it referred in direct terms to a speech delivered during a previous debate of the present Session, and in its discussion necessitated a reference to such debate, 199.		
CIVIL SERVICE :—		
H. V. HARRIS :—		
Report of Board, on frauds committed by, in the Lands Department, laid on Table, 164	2	429
LEAVE OF ABSENCE TO PUBLIC OFFICERS :—		
Return (*in part*) to Order, Session 1880-81, laid on Table, 206	2	143
CLARENDON (See "POLICE.")		
CLERK OF ASSEMBLY :—		
Reads Proclamation of Governor on opening Session, 1.		
Reads Address in reply to Governor's opening Speech, 4.		
Reads Deputy Speaker's Commission to administer the Oath, 13.		
Reads Petition, 17, 25, 50, 86, 113, 123, 201.		
Swears Members of Elections and Qualifications Committee, 31, 50, 59, 77.		
Reads Report of Committee of Elections and Qualifications, 96.		
CLYNE, MRS., CONDITIONAL PURCHASE OF (See "CROWN LANDS.")		
CODLIN MOTH :—		
Correspondence laid on Table, 18	4	1529
COLLEY BLUE :—		
Notification of land resumed for Public Cemetery, laid on Table, 18	4	1401
Abstract of land resumed for Public Purposes, laid on Table, 18	4	1403
COLLINS'S LAND, ROAD THROUGH (See "ROADS.")		
COLONISTS, TITLES CONFERRED ON :—		
Motion made (*Mr. Buchanan*) in favour of discontinuance of conferring Titles on Colonists by the British Government, 73 ; previous question moved and resolved in the affirmative, 73 ; motion negatived, 73.		
COMMISSION :—		
To Deputy-Speaker, 13.		
Report of Royal, on management of the Quarantine Station at North Head, and the Hulk "Faraway," laid on Table, 18	2	1157
Second report, laid on table, 18	2	1289
COMMITTEES (See also "SELECT COMMITTEES") :—		
Election of Angus Cameron, Esq., as Chairman of, 5.		
Commission to Chairman of, as Deputy-Speaker, 13.		
Deputy-Chairman (*James Squire Farnell, Esq.*), 31, 81.		
Appointed during the Session	1	275
CONDITIONAL PURCHASES (See "CROWN LANDS.")		
CONDITIONAL PURCHASES VALIDATION BILL :—		
Motion made (*Sir John Robertson*) for leave to bring in, 201 ; read 1°, 202.		
CONDOBOLIN (See "LICENSING DISTRICTS.")		
CONGREGATIONAL UNION INCORPORATION BILL :—		
Received from Council and read 1°, 145 ; read 2°, committed, reported without amendment, and report adopted, 169 ; recommitted, reported 2° with an amendment, and report adopted, 185 ; read 3°, and returned to Council, 189.		
CONSOLIDATED REVENUE FUND BILL :—		
Message from Governor, 47 ; brought in and read 1°, 47 ; read 2°, committed, reported without amendment, and report adopted, 51 ; read 3° and sent to Council, 55 ; returned without amendment, 63 ; assent reported, 71	4	599
CONSOLIDATED STOCK BILL :—		
Motion made (*Mr. James Watson*) for Committee of the Whole, 81 ; House in Committee, and resolution agreed to, 129.		
CONTAGIOUS DISEASES PREVENTION BILL :—		
Motion made (*Mr. Farnell*) for Committee of the Whole, 56 ; House in Committee and resolution agreed to, 66 ; read 1°, 66 ; Order of the Day postponed, 98 ; motion made for 2°, and Bill referred to Select Committee, 151.		
CONTINGENT AMENDMENT :—		
Employers Liability Bill, 66.		

REFERENCES TO THE VOTES AND PROCEEDINGS, VOL. I—SESSION 1882.	PAPERS. VOL.	PAGE.
C		
COOK'S RIVER (See "TRAMWAYS.")		
COOLAC, PUBLIC CEMETERY, AT :—		
Return to Order (*Session* 1881), laid on Table, 19	4	1367
COOTAMUNDRA :—		
WATER SUPPLY :—		
Motion made (*Mr. William Forster*), for correspondence, minutes, &c., having reference to providing for, 38.		
RAILWAY PREMISES :—		
Motion made (*Mr. William Forster*) for correspondence, minutes, &c., having reference to, 38 ; Return to Order laid on Table, 150, and not ordered to be printed.		
COUNCIL (See "LEGISLATIVE COUNCIL, THE.")		
COUNSEL AT BAR OF THE HOUSE :—		
Admittance of Charles James Manning, Esquire, 55.		
CRIMINAL LAW AMENDMENT BILL :—		
Motion made (*Mr. Wisdom*) for leave to bring in, 25 ; read 1°, 42 ; Order of the Day postponed, 47 ; read 2° and committed, 60 ; further considered in Committee, 63, 77, 82, 90, 96 ; Speaker took Chair to decide point of Order, and Committee resumed, 96 ; further considered in Committee, 105 ; further considered in Committee, reported with amendments, and report adopted, 128 ; recommitted, 139 ; recommittal further considered ; Bill reported 2° with further amendments and again recommitted, 145 ; Bill reported 3° with further amendments and report adopted, 146 ; read 3°, 155 ; sent to Council, 156.		
Petition from Social Purity Society praying that it be enacted that every one who carnally knows any girl under the age of fifteen, shall be guilty of felony, presented, 72	2	139
CROWN LANDS (See also "RESERVES") :—		
LAND OFFICES AT WARIALDA, BINGERA, AND MOREE :—		
Motion made (*Mr. W. R. Campbell*) for Return showing business transacted at, during 1881, and the first eight months of the present year, 7.		
RELIGIOUS AND PUBLIC PURPOSES :—		
Abstract of, laid on Table, 18, 39, 105, 181	2	599–607
PRESERVATION OF WATER SUPPLY :—		
Abstract of, laid on Table, 18, 39, 105, 181	2	571–591
SITES FOR CITIES, TOWNS, AND VILLAGES :—		
Abstract of, laid on Table, 18, 39, 105	2	593–597
PASTORAL AND AGRICULTURAL ASSOCIATIONS :—		
Abstract of, laid on Table, 18, 181	2	609, 611
ALTERATIONS IN DESIGNS FOR TOWNS AND VILLAGES :—		
Abstract of, laid on Table, 18, 105	2	613, 615
LAND RESUMED FOR PUBLIC PURPOSES AT COLLEY BLUE :—		
Abstract of, laid on Table, 18 (2)	4	1401, 1403
MR. SAMUEL WILSON'S CONDITIONAL PURCHASE AT YASS :—		
Return to Order (*Session* 1881), laid on Table, 19	2	325
GOODWIN *v.* FUTTER :—		
Return to Order (*Session* 1881), laid on Table, 19	2	383
JAMES MORRISON'S CONDITIONAL PURCHASE AT RYLSTONE :—		
Return to Order (*Session* 1881), laid on Table and not ordered to be printed, 19.		
OCCUPATION OF LANDS :—		
Third Annual Report, laid on Table, 19		289
COUNTRY LANDS OFFERED FOR SALE BY AUCTION :—		
Motion made (*Mr. Fletcher*) for Return showing particulars of, from 1862 to 1881, 21.		
CONDITIONAL PURCHASE MADE BY GEORGE DAY AT THE URANA LAND OFFICE :—		
Motion made (*Mr. Day*) for correspondence, minutes, reports, petitions, &c., having reference to, 22 ; Return to Address laid on Table, 123 ; ordered to be printed, 190		353
THE LAND LAWS :—		
Petition from Freeholders, Selectors, &c., of Corowa, Carnsdale, and Collendina, praying for a Royal Commission to inquire into working of, presented, and read by Clerk, 25		561
Petition from Freeholders, Selectors, &c., of Moama, praying for a Royal Commission to inquire into working of, presented, 113		563
Petition from Freeholders, Selectors, &c., of Kindra and Berry Jerry, praying for a Royal Commission to inquire into working of, presented, 150		565
MRS. CLYNE'S CONDITIONAL PURCHASE :—		
Motion made (*Dr. Ross*) to place sum on Estimates as compensation for losses sustained, and amendment agreed to, to refer question to Select Committee, 55 ; Papers referred to Committee, 72 ; Message to Council, requesting attendance of the Hon. Francis Lord, as a witness, 101 ; Message from Council, in reply, 105 ; report brought up, 181 ; motion made for adoption of report and debate adjourned, 198	2	403
MR. COLIN SIMSON :—		
Motion made (*Mr. McElhone*) for Return showing the particulars of the taking up of Reserves on Mungadel or other runs near Hay, 56 ; Return to Order, laid on Table, 164		621
HEAD'S CONDITIONAL PURCHASE ON KEOGH'S RUN :—		
Motion made (*Mr. McElhone*) for particulars of Conditional Purchases on reserves on the Warrina Run, near Coonamble, 56.		
SALE OF BY AUCTION :—		
Petition from R. C. Luscombe, on behalf of Public Meeting at the Temperance Hall, in favour of immediate stoppage of, presented, 86		567
APPLICATIONS BY AGENTS FOR CONDITIONAL PURCHASES :—		
Motion made (*Mr. Reid*) for copy of letter to the Crown Lands Agent, Newcastle, respecting, 90 ; Return to Order laid on Table, 164		557
JAMES RICE'S CONDITIONAL PURCHASE AT MOLONG :—		
Motion made (*Dr. Ross*) for copies of papers, correspondence, &c., in reference to, claimed by Mr. Francis Lord, 181.		
CONDITIONAL PURCHASES HELD BY THE MESSRS. RYRIE :—		
Motion made (*Mr. McElhone*) for return showing number of, and withdrawn, 190.		
BENJAMIN WALLACE'S CONDITIONAL PURCHASE ON BANDO STATION :—		
Motion made (*Mr. McElhone*) for particulars and correspondence respecting, 197.		
THOMAS JAMES ROGERS'S CONDITIONAL PURCHASE AT TUMUT :—		
Motion made (*Mr. McElhone*) for copies of correspondence, &c., having reference to, 197.		
MESSRS. H. H. BROWN & CO. :—		
Motion made (*Mr. McElhone*) for copies of correspondence with Mr. Keogh in reference to the sale by auction of the pre-lease of Mr. Frater, 197.		

REFERENCES TO THE VOTES AND PROCEEDINGS, VOL. I—SESSION 1882.	PAPERS. VOL.	PAGE.
C		
CROWN LANDS BILL :—		
Message from Governor, 117 ; Motion made (*Sir John Robertson*) for Committee of the Whole, 123 ; House in Committee, and Resolution agreed to, 129 ; read 1°, 139 ; Order of the Day postponed, 177 ; motion made for 2°, and debate adjourned, 194 ; debate resumed and adjourned, 202 ; debate resumed, and motion for 2° negatived, 206	2	569
CRUISERS, GUN-BOATS AND GUNS :—		
Papers relating to, with Tracings and Photographs, laid on Table, 139	4	1
CUDGEGONG TOWN HALL BILL :—		
Petition presented (*Mr. Buchanan*) praying for leave to proceed with Bill of last Session in terms of the 65th Standing Order 2 ; leave given to re-introduce, read 1° and 2°, 2 ; read 3° and sent to Council, 5 ; returned with an amendment, 59 ; amendment agreed to, and Message to Council, 67 ; assent reported, 99.		
CURRY, THE REV. CHARLES :—		
Motion made (*McElhone*) for copies of correspondence in reference to an alleged miscarriage of justice, 181.		
CUSTOMS :—		
Return showing Annual Value of Imports and Exports at Moama and Revenue at Deniliquin for last five years laid on Table, 176	2	625
CUSTOMS REGULATION ACT OF 1879 :—		
Regulations laid on Table, 145	2	623
CZERWONKA, MR. H :—		
Motion made (*Mr. Poole*), for copies of correspondence respecting the dismissal of, from the Sewerage Branch, 101 ; return to Order laid on Table, 192	2	153
D		
DAY, GEORGE, CONDITIONAL PURCHASE MADE BY, AT THE URANA LAND OFFICE :—		
Motion made (*Mr. Day*) for correspondence, minutes, reports, petitions, &c., having reference to, 22 ; Return to Address laid on Table, 123 ; ordered to be printed, 190	2	353
DEBATE (See "ADJOURNMENT.")		
DENILIQUIN (See "CUSTOMS.")		
DEPUTATION TO THE GOVERNOR (See "GOVERNOR.")		
DEPUTY CHAIRMAN OF COMMITTEES :—		
James Squire Farnell, Esquire, 31, 81.		
DEPUTY SPEAKER (See "CHAIRMAN OF COMMITTEES.")		
DESPATCHES :—		
LAID ON TABLE :—		
Labour Trade in the Western Pacific, 17	4	1547
Sydney Branch Royal Mint, 18		1539
Merchant Seamen Deserters, 18		1543
Tonnage Measurement, 18		1405
Proposed Postal Convention with Batavia, 18		1085
Outrages in the Western Pacific, 63		1583
Fugitive Offenders Act, 131		1517
DISEASES IN SHEEP ACTS AMENDMENT ACT :—		
Regulations for District of Cobar, laid on Table, 19	2	1401
DISEASES IN SHEEP ACTS AMENDMENT BILL :—		
Motion made (*Dr. Renwick*) for Committee of the Whole, 19 ; House in Committee and Resolution agreed to, 26 ; read 1°, 26 ; Message from Governor, 41 ; read, 2°, committed, reported with Amendments, and Report adopted, 43 ; read 3° and sent to Council, 46 ; returned with Amendments, 160 ; Amendments agreed to, and Message to Council, 166	2	1403
DISTRICT COURTS ACTS :—		
Annual Returns under, laid on Table, 63	2	1
DISTRICT COURTS—PLAINTS FOR TRESPASS TO LAND FILED IN :—		
Motion made (*Mr. Gannon*) for Return showing number of, during the three years ending March, 1882, 43 ; Return to Order laid on Table, 139	2	137
DISTRICTS COURTS ACT AMENDMENT BILL :—		
Motion made (*Mr. Joseph P. Abbott*), for leave to bring in, 132 ; read 1°, 189.		
DIVISIONS :—		
Attendances of Members in	1	215
No Tellers for, 151, 169.		
Adjournment of Debate, 27, 198.		
Special Adjournment, 31, 171, 193 (3).		
Previous Question, 73.		
The Governor's Opening Speech, 10, 11.		
The Prisoner Plomer, 27.		
Art Gallery, 27, 87, 124 (2).		
Watering places and Reserves Bill, 43.		
Dower Act Amendment Bill, 50.		
Railway from Redfern to Circular Quay (postponement of notice of motion), 51, 118.		
Employers Liability Bill, 66, 67.		
Gaol Chaplains, 73.		
Titles conferred on Colonists, 73 (2).		
Duty on Tea and Wheat, 102.		
New Houses of Parliament, 117, 118.		
Charles Waudby, 118.		
National Gallery of Art, 124 (2).		
Free Public Library, 125.		
Mining Act further Amendment Bill, 146.		
Management of the Quarantine Station and Hulk "Faraway," 156.		
Forests Bill, 166.		
Compensation to Henry Halloran, Esq., C.M.G., 190.		
Mrs. Clyne's Conditional Purchase, 198.		
Crown Lands Bill, 206.		
IN COMMITTEE :—		
Weekly Reports of	1	219

REFERENCES TO THE VOTES AND PROCEEDINGS, VOL. I—SESSION 1882.	PAPERS. VOL.	PAGE.
D		
DOWER ACT AMENDMENT BILL:—		
Motion made (*Mr. Pigott*) for leave to bring in, 21; read 1°, 21; motion for 2°, negatived, 50; Order of the Day discharged and Bill withdrawn, 50.		
DREDGING OPERATIONS IN SYDNEY HARBOUR:—		
Return respecting, laid on Table, 192	4	1593
DUBBO GAS COMPANY'S INCORPORATION BILL:—		
Petition presented (*Mr. Cass*) for leave to bring in, 123; leave given, 128; read 1°, 131; referred to Select Committee, 150; Report brought up, 198	4	1477
DUTY ON TEA AND WHEAT (See "TEA AND WHEAT, DUTY ON.")		
E		
EAST MACQUARIE (See "ELECTORAL.")		
EAST MAITLAND (See "MINING.")		
EDUCATION:—		
NOTIFICATION OF LANDS RESUMED FOR PURPOSES OF:—		
Laid on Table, 19, 55, 86	2	929-943
REPORT FOR 1881:—		
Laid on Table, 46		629
ARCHITECTURAL BRANCH OF THE DEPARTMENT OF PUBLIC INSTRUCTION:—		
Return respecting laid on Table, 96		799
EXAMINATION OF SCHOOL TEACHERS:—		
Motion made (*Mr. Teece*) for return showing particulars of, at the December examination in 1881 and the June examination in 1882, 102.		
FEMALE TRAINING SCHOOL, HURLSTONE:—		
Correspondence respecting engagement of Lady Principal, laid on Table, 145		853
MESSRS. THORNTON, & FRIEND, AND MRS. BARDWELL:—		
Return showing results of examination of, laid on Table, 155		795
MR. ELLIOTT, PUBLIC SCHOOL TEACHER AT QUIPOLLY:—		
Motion made (*Mr. Levien*) for copies of correspondence respecting charges made against, 155; Return to Order laid on Table, 189		791
SCHOOL ATTENDANCE OFFICERS:—		
Return respecting, laid on Table, 176		797
EGYPTIAN WAR, THE:—		
Motion made (*Sir John Robertson*) that a Joint Address be telegraphed to the Queen on the success of the British Arms, and that a Message be sent to the Council inviting its concurrence, 72; Motion made (*Sir John Robertson*) that a Deputation accompany the Speaker to present the Address to the Governor with a request that he would forward it to the Secretary of State for the Colonies for presentation to Her Majesty, 72; Message to Council, 75; Message from Council concurring in Address, 77; Speaker reports presentation to Governor, 79; and Governor's reply, 79.		
ELECTIONS AND QUALIFICATIONS COMMITTEE (See "ELECTORAL.")		
ELECTORAL:—		
ISSUE AND RETURN OF WRITS:—		
Yass Plains; Election of Louis Francis Heydon, Esquire, in room of Michael Fitzpatrick, Esq., 1; sworn, 2.		
Northumberland; Election of Thomas Hungerford, Esquire, in room of William Turner, Esquire, 1; sworn, 2.		
Redfern; Election of Francis Augustus Wright, Esquire, in room of John Sutherland, Esquire, 1; sworn, 2.		
Mudgee; Election of Sir John Robertson in room of Samuel Henry Terry, Esquire, 1; sworn, 2.		
Wentworth, Election of Edward Quin, Esquire, in room of William Adams Brodribb, Esquire, 1; sworn, 2.		
Tenterfield; Election of Augustus Ryan Fraser, Esq., in room of John Dillon, Esquire, 1 sworn, 15.		
East Macquarie; Election of Alfred John Pechey, Esq., who died, in room of Edmund Webb Esquire, 1; Election of Sydney Smith, Esquire, in room of Alfred John Pechey, Esquire, deceased, 1; sworn, 2.		
Tumut; Election of Thomas Chrysostom O'Mara, Esquire, in room of James Hoskins, Esquire, 153; sworn, 171.		
VACANT SEATS:—		
Tumut, 83.		
Gundagai, 176.		
ELECTIONS AND QUALIFICATIONS COMMITTEE:—		
Speaker's Warrant appointing laid on Table, 7; withdrawn, 9.		
Warrant laid on in substitution, 11; maturity reported, 31.		
Members of sworn by the Clerk, 31, 50, 59, 77.		
Speaker appoints first meeting of the Committee, 50.		
PRIVILEGE—SEAT OF JOHN MITCHELL PURVES, ESQUIRE:—		
Motion made (*Mr. Joseph P. Abbott*) to refer to Elections and Qualifications Committee the question as to whether the seat of John Mitchell Purves, Esquire, the Member for the Clarence, is liable to be declared vacant by reason of his holding a contract on account of the Public Service, 9; Report brought up, 96	1	279
ELECTORAL ACT AMENDMENT BILL:—		
Motion made (*Mr. R. B. Smith*) for leave to bring in, 198.		
ELECTORATE OF THE MURRUMBIDGEE, EXPENDITURE IN:—		
Return to Order (*Session* 1881) laid on Table, 181	4	1419
ELECTRIC TELEGRAPHS (See "TELEGRAPHS.")		
ELLIOTT, MR. (See "EDUCATION.")		

REFERENCES TO THE VOTES AND PROCEEDINGS, VOL. I.—SESSION 1882.	PAPERS. VOL.	PAGE.
E		
EMPLOYERS LIABILITY BILL:—		
Motion made (*Mr. Garrard*) for leave to bring in, 5; read 1°, 5; read 2°; committed, reported with amendments and report adopted, 50; Order of the Day postponed, 56; Motion made for, 3°; and proposed contingent amendment to re-commit the Bill negatived, 66; read 3°, and sent to Council, 67; returned with amendments, 160; amendments agreed to and message to Council, 169.		
Petition from Delegates of the Trades and Labour Council of New South Wales, in favour of the Bill, presented, and read by Clerk, 50	4	1629
ESTIMATES (See "FINANCE.")		
EVIDENCE IN SUMMARY CONVICTIONS BILL:—		
Motion made (*Mr. Pigott*) for leave to bring in, 21; read 1°, 21; read 2°, committed, reported, with amendments and with an amended title, and report adopted, 50; read 3°, and sent to Council, 54; returned without amendment, 90; assent reported, 109.		
EXAMINATION OF SCHOOL TEACHERS (See "EDUCATION.")		
EXHIBITS:—		
Tracings and Photographs relating to unarmoured Gunboats, Cruisers, and Guns, laid on Table as, 139.		
EXPENDITURE IN THE ELECTORATE OF THE MURRUMBIDGEE:—		
Return to Order (*Session* 1881) laid on Table, 181	4	1419
EXPENDITURE ON PUBLIC WORKS IN THE COUNTY OF ASHBURNHAM:—		
Motion made (*Dr. Ross*) for return of, from 1861, to 30 June, 1882, 25.		
EXPLORATION OF CAVES AND RIVERS OF NEW SOUTH WALES:—		
Correspondence, &c., relating to, laid on Table, 19	5	
F		
"FARAWAY":—		
Report of Royal Commission, laid on Table, 18	2	1157
Second do do 18	2	1289
Motion made (*Mr. Tarrant*) disapproving of the management of, and the Quarantine Station during the late outbreak of small-pox, and negatived, 156.		
FARNELL, JAMES SQUIRE, ESQUIRE:—		
Appointed Deputy Chairman of Committees, 31, 81.		
FEMALE TRAINING SCHOOL AT HURLSTONE (See "EDUCATION.")		
FINANCE:—		
APPLICATION OF BALANCES:—		
Minute respecting, laid on Table by Speaker, 2, 192		589-591
PUBLIC ACCOUNTS FOR 1881:—		
Laid on Table by Speaker, 2		469
TRUSTS MONEYS DEPOSIT ACCOUNTS:—		
From 1st April, 1881, to 31st March, 1882, on Table, 18		597
BANK LIABILITIES AND ASSETS:—		
For the quarter ended 31st December, 1881, laid on Table, 18		601
Do 31st March, 1882, do 18		603
Do 30th June, 1882, do 18		605
Do 30th September, 1882, do 192		607
GOVERNMENT SAVINGS BANK:—		
Statement of Accounts from 1st January to 31st December, 1881, laid on Table, 18	4	593
NEW SOUTH WALES SAVINGS BANK:—		
Return respecting Trustees, laid on Table, 159		595
ESTIMATES FOR 1883, AND SUPPLEMENTARY ESTIMATES FOR 1882 AND PREVIOUS YEARS:—		
Message No. 17 transmitting, laid on Table, 171		49
Estimates for 1883, do 171		51
Do Supplementary for 1882, and previous years, do., 171		189
ESTIMATES OF WAYS AND MEANS FOR 1883:—		
Laid on Table, 177		295
Appendix to, laid on Table, 177		443
Explanatory Statement of Public Accounts as embodied in, laid on Table, 177		433
SCHEDULE TO THE ESTIMATES-IN-CHIEF FOR 1883:—		
Laid on Table, 182		207
SUPPLY:—		
Sessional Order passed, 20.		
House to resolve itself into Committee, 43.		
House in Committee, 47, 177.		
Resolutions Reported, 47, 177.		
Resolutions agreed to, 47, 177.		
Order of the Day postponed, 182.		
WAYS AND MEANS,—		
Sessional Order passed, 20.		
House to resolve itself into Committee, 43.		
House in Committee, 47, 177.		
Resolutions reported, 47.		
Resolutions agreed to, 47.		
Order of the Day postponed, 182.		
FIRE BRIGADES BILL:—		
Motion made (*Sir Henry Parkes*) for Committee of the Whole, 43; House in Committee and resolution agreed, to, 47; read 1°, 159; Message from Governor, 164; order of the day postponed, 166; read 2°, committed, and reported with amendments, 178	4	1615
FISHERIES ACT OF 1881:—		
Amended Regulations, laid on Table, 59	4	1365
Motion made (*Mr. Fremlin*) for Select Committee to inquire into working of, 185; Member's name substituted for that of another on the Committee, 199.		
FORBES (See "LICENSING DISTRICTS.")		
FOREST LODGE, NEAR TARLO, ESTATE BILL:—		
Petition presented (*Mr. Teece*) for leave to bring in, 105; leave given and read 1°, 109; referred to Select Committee, 114; Report brought up, 150; Order of the Day postponed, 185	4	1493

REFERENCES TO THE VOTES AND PROCEEDINGS, VOL. I—SESSION 1882.	PAPERS. VOL.	PAGE.
F		
FORESTS BILL:—		
Motion made (*Dr. Renwick*) for Committee of the Whole, 19; House in Committee and resolution agreed to, 26; read 1°, 26; Message from Governor, 41; Motion made for 2° and debate adjourned, 47; Debate resumed, read 2°, and committed, 166	4	1611
"FORFARSHIRE" (See "IMMIGRATION.")		
FORMAL BUSINESS:—		
Sessional Order passed, 20.		
FORSTER, WILLIAM, ESQUIRE, M.P.:—		
Special adjournment of House on death of, 171.		
Seat of, as Member for Gundagai, declared vacant, 176.		
FRASER, AUGUSTUS RYAN, ESQUIRE:—		
Return of, as Member for Tenterfield in room of John Dillon, Esquire, 1; sworn, 15.		
FRASER & CO., MESSRS. A. (See "MINING.")		
FRASER, MR. (See "CROWN LANDS.")		
FREEHOLDS IN THE COLONY EXCEEDING 100,000 ACRES IN AREA:—		
Motion made (*Mr. Heydon*) for Return showing, and names of holders, 26; Return to Order, laid on Table, 176	2	559
FREE PUBLIC LIBRARY (See "PUBLIC LIBRARY.")		
FRIEND, MR. (See "EDUCATION.")		
FUGITIVE OFFENDERS ACT:—		
Despatches, laid on Table, 131	4	1517
G		
GAOLS:—		
CHAPLAINS:—		
Motion made (*Mr. Buchanan*) for discontinuance of State Aid to, and negatived, 73.		
BATHURST:—		
Notification of land resumed for site for, laid on Table, 123	4	1395
GARDEN PALACE (See "ART GALLERY.")		
GAS (See also "SALE AND SUPPLY OF GAS BILL"):—		
Motion made (*Mr. Poole*) for Committee of the Whole, 72; Motion made for House to resolve itself into Committee to consider resolution, and Debate adjourned, 88; order of the day discharged, 132.		
Copy of Contracts and agreements with Mr. Castner for supply of, for Railway purposes, laid on Table, 123	4	1353
GENERAL BUSINESS:—		
Sessional Order, passed, 20.		
GENERAL SAVINGS BANK BILL:—		
Motion made (*Mr. James Watson*) for Committee of the Whole, 81; House in Committee, and Resolution agreed to, 129.		
GOLD FIELDS (See "MINING.")		
GOODWIN *v.* FUTTER:—		
Return to Order (*Session* 1881) laid on Table, 19	2	383
GORDON, COUNTY OF (See "ROADS.")		
GOULBURN CATTLE SALE YARDS ACT:—		
By-laws under, laid on Table, 18	4	999
GOVERNMENT ASYLUMS:—		
Report on, for the Infirm and Destitute for 1881, laid on Table, 17	2	1135
GOVERNMENT BUSINESS:—		
Sessional Order, passed, 19.		
GOVERNMENT SAVINGS BANK (See "SAVINGS BANK, GOVERNMENT.")		
GOVERNOR (See also "MESSAGES"):—		
Proclamation of, on Opening Session, read by Clerk, 1.		
Message from, summoning Assembly to Council, 2.		
Delivers opening speech, 2; Motion made (Mr. Sydney Smith) for Select Committee to prepare Address in reply, 3; brought up and read by Clerk, 4; Motion made (*Mr. Sydney Smith*) for adoption of, and amendment moved, 4; Debate adjourned, 4; resumed, 5; adjourned, 6; resumed, 8; amendment on the amendment moved, 8; debate adjourned, 8; resumed, 10; amendment on the amendment negatived, 10; amendment negatived, 11; original motion passed, 11; presented to Governor, and his reply reported by Speaker, 13.		
Deputation to, to present joint Address to the Queen on the success of the British Arms in Egypt, 72; reply of, to Deputation of Members of both Houses on presenting joint Address, 79.		
GRAMMAR SCHOOL, SYDNEY:—		
Report for 1881, laid on Table, 19	2	849
GREGSON, JESSE:—		
Petition from, praying for leave to be heard by Counsel at Bar of the House in opposition to the Report of the Select Committee on "Lands granted to the Australian Agricultural Company," presented, 17; Motion made (*Mr. Burns*) that the prayer of the Petition be granted, 31; Counsel appeared at the Bar, 55	2	1339
Correspondence between, and Sir John Robertson, respecting roads through the A. A. Company's Estate at Warrah, laid on Table, 131	2	1345
GRENFELL WATER SUPPLY:—		
Report on, laid on Table, 18	2	1429
GUARANTEES LAW AMENDMENT BILL:—		
Motion made (*Mr. Trickett*) for leave to bring in, 9; read 1°, 9; read 2°, committed, reported without amendment, and report adopted, 66; read 3°, and sent to Council, 72; returned without amendment, 145.		
GUNBOATS, CRUISERS, AND GUNS:—		
Papers relating to, with tracings and photographs, laid on Table, 139	4	1
GUNDAGAI (See "ELECTORAL.")		
"GUNGA":—		
Motion made (*Mr. Young*) for copies of correspondence, reports, &c., having reference to the keeping of in quarantine, and copies of opinions, decisions, &c., in the case of the Fijian removed to the Little Bay Hospital, 96.		
GUNPOWDER AND EXPLOSIVES:—		
Notification of land resumed for, laid on Table, 30	4	1417
Return showing quantity of, stored at the several powder magazines, laid on Table, 37	4	1409
Motion made (*Mr. Fletcher*) for particulars of the purchase of Hulk for storage of, 101; Return to Order, laid on Table, 159	4	1411

REFERENCES TO THE VOTES AND PROCEEDINGS, VOL. I—SESSION 1882.	PAPERS. VOL.	PAGE.
H		
HALLORAN, MR. HENRY, LAND TAKEN FROM, BY BOROUGH OF ASHFIELD :—		
Return to Order (*Session* 1881) laid on Table, 19	4	833
Motion made (*Mr. Combes*) for Committee of the Whole to consider Address to place sum on Estimates as compensation to, and negatived, 190.		
HARBOUR IMPROVEMENTS, NEWCASTLE AND LAKE MACQUARIE :—		
Notification of land resumed for, laid on Table, 18	4	1391
HARRIS, H. V. :—		
Report of Board, on frauds committed by, in the Lands Department, laid on Table, 164	2	1429
HAYES, MRS. (See "IMMIGRATION.")		
HEAD'S CONDITIONAL PURCHASE ON KEOGH'S RUN (See "CROWN LANDS.")		
HEYDON, LOUIS FRANCIS, ESQUIRE :—		
Return of, as Member for Yass Plains, in room of Michael Fitzpatrick, Esquire, 1; sworn 2.		
HOLDINGS, FREEHOLD, IN THE COLONY, EXCEEDING 100,000 ACRES IN AREA :—		
Motion made (*Mr. Heydon*) for Return showing, and names of holders, 26; Return to Order laid on Table, 176	2	559
HOLIDAYS, PUBLIC, WEST MAITLAND :—		
Letter to Colonial Secretary from merchants, storekeepers, and others, laid on Table, 43	4	1541
HOLMES, MR. RICHARD YETMAN :—		
Motion made (*Mr. Joseph P. Abbott*) for copies of papers with respect to charges of stealing and illegally using a bullock by, the property of Mr. George Dines, 72.		
HOSKINS, JAMES, ESQUIRE :—		
Resignation of Seat as Member for Tumut, reported, 83.		
HOSPITAL, SYDNEY :—		
By-laws, laid on Table, 18	2	1141
HOUSES OF PARLIAMENT (See "PARLIAMENT.")		
HOWE ISLAND (See "LORD HOWE ISLAND.")		
HUGHES, MR. JOSHUA :—		
Motion made (*Mr. Byrnes*) for copies of papers, minutes, &c., having reference to the claim made by, to a piece of land situated in Macquarie-street, Parramatta, 72.		
Motion made (*Mr. Byrnes*) for Select Committee, 102.		
HUNGERFORD, THOMAS, ESQUIRE :—		
Return of, as Member for Northumberland, in room of William Turner, Esquire, 1; sworn, 2.		
HURLSTONE FEMALE TRAINING SCHOOL :—		
Correspondence respecting engagement of lady principal, laid on Table, 145	2	853
I		
IMMIGRATION :—		
Further Return to Address (*Session* 1876-7) ship "Forfarshire," laid on Table, 17		957
Do. (do.) do. "Samuel Plimsoll," do. 17		957
Do. (do.) do. "Orontes," do. 59		963
Do. (do.) do. "Northern Monarch," do. 106		967
Return of particulars of immigrants by "Northampton," laid on Table, 177		989
"ORONTES" :—		
Motion made (*Mr. Tarrant*) for copies of correspondence between the Agent for Immigration and the Surgeon of the ship "Orontes," on the occasion of her recent visit to this port, 74; Return to Order, laid on Table, 139		981
"SMYRNA" AND "CAMPERDOWN" :—		
Motion made (*Mr. Tarrant*) for copies of correspondence between the Surgeons-Superintendent and the Agent for Immigration, on the occasion of the visit of these ships in 1878 and 1880, 46; Return to Order, laid on Table, 128	2	971
REGULATIONS :—		
Laid on Table, 106		953
REPORT FOR 1881 :—		
Laid on Table, 139		945
CASE OF MRS. HAYES :—		
Report of Agent, laid on Table, 189		955
INFIRM AND DESTITUTE :—		
Report on Government Asylums for, for 1881, laid on Table, 17		1135
INSANE :—		
Report on, for 1881, laid on Table, 17		1061
INSOLVENT ESTATES (See "SEMPILL, MR. R. H.")		
INSPECTOR OF STOCK (See "STOCK.")		
INSTITUTE OF SURVEYORS INCORPORATION BILL :—		
Petition presented (*Mr. Farnell*) praying for leave to proceed with Bill of last Session, in terms of 65th Standing Order, 17; read 1°, 17; Order of the Day postponed, 50, 87; Order of the Day discharged and Bill withdrawn—Bill not properly before the House, 114.		
Petition from Surveyors in favour of obtaining the opinion of the Surveyor-General before proceeding with Bill, presented, 50		1621
Petition from Surveyors for favourable consideration of, presented, 81	4	1623
Do. do. do. 81		1625
Do. Citizens of N.S. Wales, do. do. 81		1627
INVENTIONS :—		
Motion made (*Mr. Garrard*) for Return showing particulars of applications for Letters of Registration of, 37.		
Letters of Registration of, for 1879, laid on Table, 65	5	
Do. 1880, do. 65	5	
J		
JAMIESON, MR. JOHN S. :—		
Correspondence relating to the sale of land at Ashfield to, laid on Table, 19	4	1585
JUDGES SALARIES AND PENSIONS BILL :—		
Message from Governor, 165; Motion made (*Mr. W. J. Foster*), for Committee of the Whole, 165; House in Committee and Resolution agreed to, 182; read 1°, 184	2	141

REFERENCES TO THE VOTES AND PROCEEDINGS, VOL. I—SESSION 1882.	PAPERS. VOL.	PAGE.
K		
KEOGH, MR. (See "CROWN LANDS.")		
L		
LABOUR TRADE IN THE WESTERN PACIFIC:—		
Despatch, laid on Table, 17	4	1547
LAKE MACQUARIE (See "NEWCASTLE HARBOUR AND LAKE MACQUARIE.")		
LAND ACQUIRED BY MR. ALEXANDER RYRIE AT MICHELAGO:—		
Motion made (*Mr. Levin*) for return showing position and area of, and debate adjourned, 185; debate resumed and motion negatived, 199.		
LAND LAWS, THE (See "CROWN LANDS.")		
LAND MACHINERY REGULATION BILL:—		
Motion made (*Mr. James Watson*), for Committee of the Whole, 25; House in Committee and resolution agreed to, 44; read 1°, 44; Message from Governor, 71; Order of the Day postponed, 166, 182	4	1613
LAND IN MACQUARIE STREET, PARRAMATTA (See "PARRAMATTA.")		
LAND OFFICES (See "CROWN LANDS.")		
LANDS DEPARTMENT:—		
Report for 1881 laid on Table, 18	2	173
Report of Board on frauds committed by H. V. Harris in, laid on Table, 164	2	429
LANDS GRANTED TO THE AUSTRALIAN AGRICULTURAL COMPANY (See "AUSTRALIAN AGRICULTURAL COMPANY.")		
LANDS OFFERED FOR SALE BY AUCTION (See "CROWN LANDS.")		
LANDS RESUMED FOR PUBLIC PURPOSES:—		
NOTIFICATIONS OF, LAID ON TABLE:—		
For Water Supply, Sydney and Suburbs, 18, 150, 192	2	1415–1423
For Harbour Improvements at Newcastle and Lake Macquarie, 18	4	1391
For Sewerage Works for Sydney, 18	4	1397
For Roads and Bridges, 18	2	1371
For Public Cemetery at Colley Blue, 18 (2)	4	1401, 1403
For Public School Purposes, 19, 55, 86	2	929–943
For Storage of Gunpowder and Explosives, 30	4	1417
Site of Gaol at Bathurst, 123.	4	1395
For Water Supply, Bathurst, 150	2	1421
Motion made (*Mr. Reid*), for Return showing particulars of, under the provisions of the Lands for Public Purposes Acquisition Act, 37; Return to Order laid on Table, 192	4	1379
LANE, MRS. (See "MINING.")		
LAW OF SEDUCTION AMENDMENT BILL:—		
Motion made (*Mr. Buchanan*), for leave to bring in, 25; read 1°, 26; Order of the Day postponed 31, 51, 87, 132, 151.		
LEAVE OF ABSENCE TO PUBLIC OFFICERS:—		
Return (*in part*) to Order (Session 1880-81), laid on Table, 206	2	143
LEGISLATIVE COUNCIL, THE:—		
Motion made (*Mr. Farnell*), for Return showing particulars of appointments to, 119; Return to Address laid on Table, 150	1	295
LETTERS OF REGISTRATION OF INVENTIONS:—		
Motion made (*Mr. Garrard*), for Return showing particulars of applications for, 37.		
For 1879, laid on Table, 65	5	
For 1880, laid on Table, 65	5	
LIBRARIES (See "PUBLIC LIBRARY.")		
LIBRARY COMMITTEE:—		
Sessional order passed, 20.		
LICENSING ACT OF 1882:—		
Petition from hotelkeepers, South Deniliquin, respecting accommodation in public-houses, presented, 189	2	1307
LICENSING BENCH, QUEANBEYAN:—		
Motion made (*Mr. W. R. Campbell*) for correspondence between the Chairman of the Board and the Department of Justice in regard to the Licensing Court business, 38; Return to Order laid on Table, 86	2	1323
LICENSING BENCHES:—		
Motion made (*Mr. William Forster*) for return of nominations, recommendations, and appointments to, 38.		
LICENSING DISTRICTS OF FORBES, PARKES, AND CONDOBOLIN:—		
Motion made (*Mr. Cooke*), for copies of correspondence, minutes, &c., having reference to forming of and to the appointment of Licensing Magistrates, 150; Return to Order laid on Table, 159.	2	1309
LICENSING MAGISTRATES, ARMIDALE:—		
Motion made (*Mr. Copeland*) for copies of correspondence in connection with appointment of, 9; Return to Order laid on Table, 98	2	1317
LIMITATION OF OATHS BILL:—		
Motion made (*Mr. Joseph P. Abbott*) for leave to bring in, 7; read 1°, 7; read 2° and committed 66; further considered in Committee, and Chairman reported progress (no report), 98.		
LOCAL GOVERNMENT BILL:—		
Motion made (*Sir Henry Parkes*) for Committee of the Whole, 19; House in Committee and resolution agreed to, 26; Message from Governor, 165	4	1617
LORD'S DAY, OBSERVANCE OF THE (See also "ART GALLERY"):—		
Petition from male inhabitants of New South Wales in favour of maintenance of, presented and read by Clerk, 17	4	1603
Do female do. do. 25.		1601
Do. do. do. do. 86.		1605
Do. male do. do. 86.		1599
Do. inhabitants of Bathurst do. do. 86.		1599

REFERENCES TO THE VOTES AND PROCEEDINGS, VOL. I—SESSION 1882.	PAPERS. VOL.	PAGE.
L		
LORD HOWE ISLAND :—		
Report on present state and future prospects of, laid on Table, 25	4	1463
Correspondence respecting removal of Captain Armstrong, resident Magistrate of, laid on Table, 106.	2	105
Information respecting palm seeds and plants received by the Director of the Botanical Gardens, laid on Table, 189	4	1475
LORD, THE HONORABLE FRANCIS, M.L.C. :—		
Attendance of as witness before Select Committee on Mrs. Clyne's conditional purchase, 101, 105.		
LUNATIC ASYLUMS :—		
Statement respecting public and private, laid on Table, 71	2	1101
M		
MACHINERY REGULATION BILL (See "LAND MACHINERY REGULATION BILL.")		
MANAGEMENT OF THE CIRCULAR QUAY (See "CIRCULAR QUAY.")		
MANNING, CHARLES JAMES, ESQUIRE :—		
Attendance of, at Bar of House as Counsel, 55.		
MEETING OF THE HOUSE :—		
Sessional Order, passed, 21.		
MEMBERS :—		
Sworn, 2, 15, 171.		
Attendance of, in divisions and counts-out during the Session	1	215
MERCHANT SEAMEN DESERTERS :—		
Despatch laid on Table, 18	4	1543
MESSAGES :—		
TRANSMISSION OF BETWEEN THE TWO HOUSES :—		
Sessional Order, passed, 20.		
FROM THE GOVERNOR :—		
Summoning Assembly to Council, 2.		
No. 1. Diseases in Sheep Acts Amendment Bill, 41	2	1403
2. Forests Bill, 41	4	1611
3. Watering Places and Reserves Bill, 41	4	831
4. Consolidated Revenue Fund Bill, 47	4	599
5. Assenting to Consolidated Revenue Fund Bill, 71.		
6. Land Machinery Regulation Bill. 71	4	1613
7. Assenting to Cudgegong Town Hall Bill, 99.		
8. Do. Evidence in Summary Convictions Bill, 109.		
9. Do. Barristers Admission Bill, 109.		
10. Crown Lands Bill, 117	2	569
11. Fire Brigades Bill, 164	4	1615
12. Local Government Bill, 165	4	1617
13. Sale and Supply of Gas Bill, 165	4	1491
14. Judges Salaries and Pensions Bill, 165	2	141
15. Pastures and Stock Protection Bill, 165	2	1399
16. Estimates for 1883, and Supplementary Estimates for 1882 and previous years, 171	4	49
17. Bathurst Presbyterian Church Grant Resumption Bill, 176	4	1619
FROM ASSEMBLY TO COUNCIL :—		
Transmitting Cudgegong Town Hall Bill, 5.		
Tamworth Gas and Coke Company's Bill, 38.		
Diseases in Sheep Acts Amendment Bill, 46.		
Evidence in Summary Convictions Bill, 55.		
Barristers Admission Bill, 55.		
Consolidated Revenue Fund Bill, 55.		
Employers Liability Bill, 67.		
Guarantees Law Amendment Bill, 73.		
Mining Act further Amendment Bill, 150.		
Criminal Law Amendment Bill, 156.		
Wharfage and Tonnage Rates Act Amendment Bill, 166.		
Watering-places and Reserves Bill, 170.		
Agreeing to amendment in Cudgegong Town Hall Bill, 67.		
Agreeing to amendments, with an amendment in the Tamworth Gas and Coke Company's Bill, 98.		
Agreeing to amendments in Diseases in Sheep Acts Amendment Bill, 166.		
Do. do. Employers Liability Bill, 169.		
Returning Congregational Union Incorporation Bill, without amendments, 189.		
Inviting concurrence in Joint Congratulatory Address to the Queen on the success of the British Arms in Egypt, 75.		
Requesting attendance of the Honorable Francis Lord as a witness before Select Committee, 101.		
FROM COUNCIL TO ASSEMBLY :—		
Returning Cudgegong Town Hall Bill, with an amendment, 59.		
Do. Consolidated Revenue Fund Bill, without amendment, 63.		
Do. Evidence in Summary Convictions Bill, without amendment, 90.		
Do. Barristers Admission Bill, without amendment, 90.		
Do. Tamworth Gas and Coke Company's Bill, with amendments, 91.		
Do. Guarantees Law Amendment Bill, without amendment, 145.		
Do. Diseases in Sheep Acts Amendment Bill, with amendments, 160.		
Do. Employers Liability Bill, with amendments, 160.		
Do. Mining Act Further Amendment Bill, without amendment, 194.		
Do. Wharfage and Tonnage Rates Act Amendment Bill, without amendment, 202.		
Agreeing to Joint Congratulatory Address to the Queen on the success of the British Arms in Egypt, 77.		
Agreeing to Assembly's amendment on Council's amendments in Tamworth Gas and Coke Company's Bill, 106.		
Granting leave to the Hon. Francis Lord to attend as witness before Select Committee, 105.		
Transmitting Congregational Union Incorporation Bill, 145.		

REFERENCES TO THE VOTES AND PROCEEDINGS, VOL. 1—SESSION 1882.	PAPERS. VOL.	PAGE.
M		
MIDNIGHT :—		
Sittings after, 38, 82, 87, 124, 139.		
MINERALS (See "MINING.")		
MINES DEPARTMENT :—		
Report for 1881, laid on Table, 19		609
MINING :—		
GOLD-MINING LEASES :—		
Additional Regulations, laid on Table, 19		769
MINES DEPARTMENT :—		
Report for 1881, laid on Table, 19		609
APPLICATIONS TO MINE UNDER RESERVES :—		
Return (in part) to Order (Session 1880—81), laid on Table, 19		757
MINERAL LEASES AT VEGETABLE CREEK :—		
Motion made (*Mr. Joseph P. Abbott*) for Select Committee to inquire into and report upon, which was refused to Fraser and party, 56.		
Petition from William J. Weston, praying for permission to appear before the Committee in person or by Counsel on behalf of the Great Britain Tin-mining Company, presented, 72; referred to Select Committee, 129	4	771
Petition from A. Fraser & Co. praying for permission to appear before the Committee in person, or by Counsel, with respect to, presented, 81; referred to Select Committee, 129		771
Motion made (*Mr. Joseph P. Abbott*) for copies of various applications for, by different persons, 177; Return (*in part*) to order, laid on Table, 197; Return (*in part*) to order, laid on Table, 197.		773, 799
MINERAL CONDITIONAL PURCHASES MADE BY THE MESSRS. WHITE :—		
Motion made (*Mr. McElhone*) for copy of correspondence, minutes, &c., and copies of plans with reference to, at Liverpool Plains and the Upper Hunter Electorate, 90.		
APPLICATION FOR GOLD-MINING LEASE AT COPELAND :—		
Motion made (*Mr. Copeland*) for copies of all papers, &c., in connection with, of Carl Scott and others, 177; Return to Order, laid on Table, 197		817
APPLICATIONS FOR A MINERAL CONDITIONAL PURCHASE AT EAST MAITLAND :—		
Motion made (*Mr. McElhone*) for copies of correspondence, &c., with Mrs. Lane and Messrs. J. and A. Brown, in reference to, 197.		
APPLICATIONS FOR GOLD LEASES :—		
Motion made (*Mr. Copeland*) for return showing particulars of those granted, refused, and withdrawn, 105.		
MINING ACT FURTHER AMENDMENT BILL :—		
Motion made (*Dr. Renwick*) for leave to bring in, 128; read, 1°, 128; read 2°, committed, reported without amendment, and report adopted, 146; read 3°, and sent to Council, 150; returned without amendment, 194.		
MINISTERIAL STATEMENT :—		
159.		
MINT :—		
Despatch, laid on Table, 18	4	1539
MOAMA (See "CUSTOMS.")		
MONEY ORDERS :—		
Convention between New South Wales and the United States, on the exchange of, laid on Table, 18.	4	1089
MOORE PARK (See "AGRICULTURAL SOCIETY, SYDNEY.")		
MOREE :—		
Motion made (*Mr. W. R. Campbell*) for Return showing business transacted at Land Office during 1881, and the first eight months of the present year, 7.		
MORRISON, JAMES, CONDITIONAL PURCHASE OF, AT RYLSTONE :—		
Return to Order (*Session* 1881), laid on Table, and not ordered to be printed, 19.		
MORT'S BAY IMPROVEMENT BILL :—		
Petition presented (*Mr. Cameron*) for leave to bring in, 197; leave given, and read 1°, 201; referred to Select Committee, 206.		
MUDGEE (See "ELECTORAL.")		
MUNICIPALITIES (See BY-LAWS.")		
MURPHY, STEPHEN :—		
Motion made (*Mr. William Forster*) for copies of correspondence, minutes, &c., having reference to the case of, in a matter of litigation, 117; Return to Address, laid on Table, 197; ordered to be printed, 201	2	99
MURRUMBIDGEE ELECTORATE :—		
Return to Order (Session 1881), laid on Table, 181	4	1419
MUSEUM :—		
Report for 1881, laid on Table, 19	2	871
N		
NATIONAL GALLERY OF ART (See "ART GALLERY.")		
NAVAL BRIGADE (See "VOLUNTEERS.")		
NEWCASTLE HARBOUR AND LAKE MACQUARIE :—		
Notification of land resumed for improvements to, laid on Table, 18	4	1391
NO QUORUM :—		
After commencement of business, 14.		
NO REPORT :—		
From Committee on Bill, 31, 98.		
"NORTHERN MONARCH" (See "IMMIGRATION.")		
"NORTHAMPTON" (See "IMMIGRATION.")		
NORTH SHORE BRIDGE (See "BRIDGES.")		
NO TELLERS ON DIVISIONS :—		
151, 169.		
NORTHUMBERLAND (See "ELECTORAL.")		
NOTIFICATIONS OF LANDS RESUMED (See "LANDS RESUMED FOR PUBLIC PURPOSES.")		
NOXIOUS TRADES :—		
Motion made (*Mr. Fremlin*) in favour of carrying on, beyond the City, and amendment agreed to to refer question to a Royal Commission, 198.		

REFERENCES TO THE VOTES AND PROCEEDINGS, VOL. I—SESSION 1882.	PAPERS. VOL.	PAGE.
N		
NUISANCES PREVENTION ACT:—		
By-laws, Newcastle, laid on Table, 18	4	1009
Do. Waverley, do. 18		1011
Do. The Glebe, do. 18		989
Do. Goulburn, do. 18		999
Do. Redfern, do. 77		977
Do. Bourke, do. 106		961
Do. Dubbo, do. 106		975
O		
OATHS BILL (See "LIMITATION OF OATHS BILL.")		
OBSERVANCE OF THE LORD'S DAY:—		
Petition from Male Inhabitants of New South Wales in favour of maintenance of, presented, and read by Clerk, 17	4	1599
Do. Female do. do. do. 25...		1601
Do. do. do. do. do. 86...		1605
Do. Male do. do. do. 86...		1603
Do. Inhabitants of Bathurst and neighbourhood do. do. 86...		1599
OCCUPATION OF CROWN LANDS BRANCH OF THE DEPARTMENT OF MINES:—		
Third Annual Report, laid on Table, 19	2	289
"OCEAN":—		
Petition from George Richard Stevens, of the firm of George R. Stevens & Co., respecting alleged pecuniary loss to them by placing the ship in quarantine, presented, 81	2	1303
O'MALLEY *v.* ABEL & HILLS:—		
Motion made (*Mr. Levien*) for copies of all evidence and papers in cases of, respecting allotment 8 of section 5, Hoskin-street, Temora, 155.		
O'MARA, THOMAS CHRYSOSTOM, ESQUIRE:—		
Election of, in room of James Hoskins, Esquire, resigned, 153; sworn, 171.		
OPENING OF THE SESSION (See "PARLIAMENT.")		
OPENING SPEECH (See "GOVERNOR.")		
ORDERS:—		
Alphabetical Register of, and Addresses	1	269
ORDERS OF THE DAY:—		
Discharged, 50, 114, 132, 151, 199.		
ORDNANCE LANDS TRANSFER BILL:—		
Read 1° *pro forma*, 2.		
OREEL RUN (See "RESERVES.")		
"ORONTES" (See "IMMIGRATION.")		
OWEN (See "QUEEN, THE, *v.* OWEN.")		
P		
PACIFIC (See "WESTERN PACIFIC.")		
PARKES (See "LICENSING DISTRICTS.")		
PARLIAMENT:—		
Proclamation on opening of, read by Clerk, 1.		
Proclamation proroguing Council and Assembly	1	207
Proclamation dissolving Assembly	1	209
HOUSES OF:—		
Motion made (*Mr. R. B. Smith*) in favour of construction of New, and amended motion agreed to, 117.		
PARRAMATTA, LAND IN MACQUARIE-STREET:—		
Motion made (*Mr. Byrnes*) for copies of all papers having reference to the claim made by Joshua Hughes to, 72.		
Motion made (*Mr. Byrnes*) for Select Committee, 102.		
PARROT, SURVEYOR (See "WAVERLEY STREETS, ALIGNMENT OF.")		
PASTURES AND STOCK PROTECTION ACT:—		
Regulations under, laid on Table, 65	2	1391
PASTURES AND STOCK PROTECTION BILL:—		
Message from Governor, 165; motion made (*Dr. Renwick*) for Committee of the Whole 165; House in Committee and Resolution agreed to, 177	2	1399
PATENTS (See "INVENTIONS.")		
PECHEY, ALFRED JOHN, ESQUIRE:—		
Return of, as a Member for East Macquarie, and death of, 1.		
PERICOOTA RESERVES (See "RESERVES.")		
PETITIONS:—		
Sessional Order for printing of, passed, 21.		
Weekly Abstracts of	1	243
PHOTOGRAPHS:—		
Relating to unarmoured Gunboats, Cruisers, and Guns, laid on Table, *as Exhibits*, 139.		
PLAINTS FOR TRESPASS (See "DISTRICT COURTS.")		
PLANS OF SUBDIVISION OF LAND REGISTRATION BILL:—		
Motion made (*Mr. Murray*) for leave to bring in, 9.		
PLANTS AND SEEDS DISTRIBUTED AND RECEIVED:—		
Return to Order (*Session* 1881), laid on Table, 17	4	1423
Information respecting palm seeds and plants received from Lord Howe Island by the Director of the Botanical Gardens, laid on table, 189	4	1475
PLOMER, THE PRISONER:—		
Motion made (*Mr. Buchanan*) for copies of depositions and all other papers in the case of, who was convicted of rape, sentenced to death, and reprieved, and negatived, 27.		
Report of His Honor Mr. Justice Windeyer on case of, laid on Table, and not ordered to be printed, 71.		
POCKATAROO RUN (See "RESERVES.")		
POINT OF ORDER:—		
Reported from Committee of the Whole, 96.		
Arising in the House, 110, 199.		

REFERENCES TO THE VOTES AND PROCEEDINGS, VOL. I—SESSION 1882.	PAPERS. VOL.	PAGE.
P		
POLICE :—		
REPORT OF THE DEPARTMENT :—		
For 1881, laid on Table, 17	2	995
CLARENDON :—		
Motion made (*Mr. William Forster*) for copies of correspondence, &c., since the date of the last laid on Table, having reference to the removal of, 87 ; Return to Order, laid on Table, 131 ...	2	1009
STRENGTH AND DISTRIBUTION OF FORCE :—		
Return showing, laid on Table, 150	2	1003
POSTAL :—		
Report on Department, laid on Table, 18	4	1019
Convention between New South Wales and the United States of America on the Exchange of Money Orders, laid on Table, 18	4	1089
Despatch respecting proposed Convention with Batavia, laid on Table, 18	4	1085
POWDER MAGAZINES (See "GUNPOWDER AND EXPLOSIVES.")		
PRESS MESSAGES :—		
Regulations regarding reduction of charges, laid on Table, 43	4	1087
PREVIOUS QUESTION :—		
Titles conferred on Colonists, 73.		
PRICKLY PEAR DESTRUCTION BILL :—		
Motion made (*Mr. Joseph P. Abbott*) for Committee of the Whole, 7 ; Order of the Day postponed, 9 ; House in Committee, and resolution agreed to, 66 ; read 1°, 66 ; Speaker ruled that Bill was not regularly before the House, not having received the recommendation of the Crown, 98.		
PRIVATE LUNATIC ASYLUMS (See "LUNATIC ASYLUMS.")		
PRIVILEGE :—		
Motion made (*Mr. Joseph P. Abbott*) to refer to Committee of Elections and Qualifications the question as to whether the seat of John Mitchell Purves, Esquire, the Member for the Clarence, is liable to be declared vacant, by reason of his holding a contract on account of the Public Service, 9 ; Report brought up, 96.	1	279
PROCLAMATION :—		
Opening of Parliament, read by Clerk, 1.		
Prohibiting introduction of Stock into the Colony, laid on Table, 19	2	1397
Proroguing Council and Assembly	1	207
Dissolving Assembly	1	209
PROSPECT WATER WORKS (See "WATER SUPPLY.")		
PUBLIC ACCOUNTS (See "FINANCE.")		
PUBLIC HOLIDAYS (See "HOLIDAYS, PUBLIC, WEST MAITLAND.")		
PUBLIC AND PRIVATE LUNATIC ASYLUMS :—		
Statement respecting, in the Colony, laid on Table, 71	2	1101
PUBLIC LIBRARY :—		
SYDNEY :—		
Report for 1881, laid on Table, 19	2	901
Motion made (*Sir Henry Parkes*) in favour of site occupied by the Benevolent Asylum as site for, 109 ; point of order, 110 ; Amendment proposed and Debate adjourned, 110 ; Debate resumed and motion negatived, 125.		
Petition from Sydney, in favour of the Benevolent Asylum site, presented, and read by Clerk, 123.	2	923
LIVERPOOL :—		
By-law, laid on Table, 19	4	1013
THE GLEBE :—		
By-law, laid on Table, 19	4	1015
PUBLIC SCHOOLS (See "EDUCATION.")		
PUBLIC VEHICLES REGULATION ACT :—		
By-laws under, laid on Table, 17	4	1017
PUBLIC WORKS IN THE COUNTY OF ASHBURNHAM, EXPENDITURE ON :—		
Motion made (*Dr. Ross*) for Return of, from 1861, to 30th June, 1882, 25.		
PURVES, JOHN MITCHELL, ESQUIRE :—		
Motion made (*Mr. Joseph P. Abbott*) to refer to Committee of Elections and Qualifications question as to whether Seat of, is liable to be declared vacant by reason of holding a contract on account of the Public Service, 9 ; Report brought up, 96	1	279
PYRMONT BRIDGE :—		
Motion made (*Mr. Abigail*) for copies of minutes, letters, &c., having reference to the resumption of, by the Government, 30.		
Q		
QUARANTINE :—		
STATION, NORTH HEAD :—		
Report of Royal Commission, laid on Table, 18	2	1157
Second do., do. 18	2	1289
Motion made (*Mr. Tarrant*) disapproving of the management of, and the hulk "Faraway," during the late outbreak of small-pox and negatived, 156.		
STEAMSHIP "OCEAN" :—		
Petition from George Richard Stevens, of the firm of George R. Stevens & Co., respecting alleged pecuniary loss to them by placing of, in quarantine, presented, 81	2	1303
STEAMSHIP "GUNGA" :—		
Motion made (*Mr. Young*) for copies of correspondence, reports, &c., having reference to the keeping of in, and copies of opinions, decisions, &c., in the case of the Fijian removed to the Little Bay Hospital, 96.		
QUEANBEYAN LICENSING BENCH :—		
Motion made (*Mr. W. R. Campbell*) for correspondence between the Chairman of the Board and the Department of Justice in regard to the Licensing Court Business, 38 ; Return to Order laid on Table, 86	2	1323
QUEEN, THE *v.* OWEN :—		
Motion made (*Dr. Ross*) for copies of complaints, depositions, &c., in case of, at Molong, 90 ; Return to Address, laid upon the Table, 139	2	85
QUESTIONS AND ANSWERS :—		
Sessional Order passed, 20.		

QUESTIONS (*continued*) :—
ABATTOIRS :—Glebe Island, 192.
A'BECKETT MRS. EMMA LOUISA :—Claim of, 169, 204.
ABORIGINALS :—
Blankets for, at Gosford, 75.
Farm for, Forbes, 111.
ACCIDENTS :—On Tramways, 30, 46, 181.
ACHESON, MR. R. H. :—Appointment of to Civil Service, 42.
ADAMSTOWN :—Mechanics Institute, 58.
ADMINISTRATION OF JUSTICE :—
Special Jury Lists, 35.
The prisoner Plomer, 36, 62, 98.
Alexander Lindsay, 42.
The prisoner Bechet, 89, 188.
Case of Stephen Murphy, 112.
Sentence passed by Mr. District-Court Judge Forbes, 113.
Case of Eliza O'Brien, 127.
Appointment of Mr. E J. Coman to the Commission of the Peace, 149.
Prisoners for trial at Tamworth, 154.
Prisoners for trial at Parramatta, 154.
Mr. Oliver Saunders, 180.
Mr. Yetman Holmes, 180.
Petition of Mrs. A'Beckett, 169, 204.
Prisoner Joseph Bell, 201.
Case of Edward Russell Daunt, 205.
ADULTERATION :—Of Food and Drink, 181.
ADVERTISEMENTS :—Government, 89.
ADVERTISING :—On Railway Stations, 112.
AGENTS FOR CONDITIONAL PURCHASERS :—
Applications by, 100, 154.
AGRICULTURAL SOCIETY'S GROUND :—In Moore Park, 83.
ALBURY :—
Water Supply, 58.
Railway Extension, 81.
ALDERSON & SONS :—Contract of, with Post-office, 33.
ALEXANDRIA :—Recreation Ground for, 173.
AMERICAN DUTY :—On Australian Wool, 143.
ANDERSON, MR. :—Land occupied by at Middle Harbour for Training School, 142.
ANIMALS :—Case of cruelty to a bullock at the Jewish slaughter-house, 62.
ANNANDALE :—Tolls, 35.
ARCHITECTURAL BRANCH OF THE DEPARTMENT OF PUBLIC INSTRUCTION :—Work and pay of Officers, 46.
ARMIDALE :—
Great Northern Road at, 159.
Railway Platform and Siding at junction of Nundle Road, 206.
ARMSTRONG, CAPTAIN :—Dismissal of, from Lord Howe Island, 24, 103, 136, 158.
ART GALLERY :—
Erection of new, 101.
Works of Art in, 201.
ARTILLERY :—
George's Head Battery, 49.
Volunteer and Permanent Forces, 201.
ATTENDANCE OFFICERS :—Appointment of, 155.
AUCTION SALE :—Crown Lands surveyed for, 195.
BAKER, MR. :—Search for by the Police, 159.
"BALLINA" :—Removal of, at the entrance to Port Macquarie, 65, 189.
BALMAIN :—
New School, 45.
Tramway, 167.
BANK HOLIDAY :—In Northern Districts, 145.
BANKSTOWN :—Tramway, 24, 100.
BARRABA :—Tank at Court-house, 189.
BATHURST :—Meeting of Irish Land League in School of Arts, 108, 173.
BECHET, ALPHONSE :—Fresh evidence in case of, 89, 188
BELL, JOSEPH, PRISONER :—Petition for remission of sentence, 201.
BENEVOLENT ASYLUM SITE :—For Railway Purposes, 116, 137
BILLABONG CREEK :—Bridge, 25.
BINGERA :—Business of Land Office at, 138.
BLACK CREEK :—Bridge over, 153.
BLACKTOWN :—New Station, 46.
BLANKETS FOR ABORIGINALS :—At Gosford, 75.
BLUE MOUNTAINS :—
Telegrams for, 116.
Planting Reserves on, 77.
BOARD :—To inquire into Railway Goods Rates, 116.
BOGGABRI :—Railway from, to Narrabri, 53.
BOHEMIA CREEK :—Bridge over, 54.
BOILING DOWN ESTABLISHMENT :—Glebe Island, 138.
BONDI :—Tramway, 77.
BORAH CREEK :—
Road, 36.
Road between, and Quirindi, 206.
BORDER DUTIES :—Conference with Victoria, 16.
BOTANICAL GARDENS :—Opening of Gates on Sundays, 147.
BOTANY :—
Schools at, 33.
Light on South Head at, 163.

Q

QUESTIONS (*continued*) :—
BOURKE :—
Road to Wanaaring, 121.
Salaries of Civil Servants in Electorate of, 144.
BOURKE-STREET SURRY HILLS :—Post Office, 58.
BREAKWATER, Coonamble, 128.
BRICKS :—
Government Contract for, with Junction Brick Company, 54.
Registration of Junction Brick Company, 71.
BRIDGES :—
Pyrmont, 16, 57.
Over the Billabong Creek, at Clarendon, 25.
North Shore, 29, 53, 147, 183, 203.
Oakey Creek, 29.
Peel River, 29, 36.
Manilla River, 29, 154.
Iron Cove, 45, 80, 138, 141, 184.
Narrabeen Lagoon, 49.
Bohemia Creek, 54.
Railway, Petersham, 61.
Railway, William-Henry-street, 61.
On Western Road, South Creek, 80.
Railway, Newtown, 81.
Buckley's Crossing, 167.
Toll-bar, Broken Back, 116.
Sandy Creek, 144.
Black Creek, 153.
Tumberumba, 155.
In Substitution of Ferries, 184, 189.
Williams River, 184, 191.
Paterson River, 184, 191.
Shoalhaven River, 184.
BRIDGEWATER :—Public School, 80.
BROKEN BACK BRIDGE :—Toll-bar, 116.
BROWN, J. & A. :—Mineral Conditional Purchases made by, 24.
BUCKLEY'S CROSSING :—Bridge, 167.
CABMEN :—
Licenses and fines, 138.
Weather-sheds for, 127.
CADETS :—Articled in Roads Department, 62.
CAMPBELL-STREET :—Widening of, 138.
CAMPBELLTOWN :—Additional Train to, 175.
CANTERBURY :—Tramway, 24, 100.
CASSILIS :—
District Court, 62.
Mr. Collier, Telegraph Assistant, 175.
CASTLE MOUNTAIN :—School at, 57.
CATTLE TRUCKS :—Supply of, by Railway Department, 30.
CEMETERY :—Rookwood, 16.
CENSUS FOR 1881 :—Summary Tables, 25.
CHEQUES :—Received in Payment for Crown Lands, 122.
CHIEF COMMISSIONER OF INSOLVENT ESTATES :—Salary of, 139.
CIRCUIT COURTS :—
Narrabri, 98.
Business of, 142.
Young, 195.
CIRCULAR QUAY :—Wharfage rates and rebates, 53, 145.
CIVIL SERVICE :—
William and John Sims, 34.
Business in Registrar-General's Department, 35.
Mr. R. H. Acheson, 42.
Alleged Arrear of Work in Lands Titles Department, 69.
Salaries of Clerks in Department of Lands, 70.
Mr. Charles De Boos, 84, 111, 122.
Introduction of Bill, 107.
Salaries in Electorate of Bourke, 144.
CLARENCE, THE :—Railway from, to New England, 204.
CLARENDON :—Mails between Sydney and, 90.
CLEANING PUBLIC SCHOOLS :—Allowance for, 122.
CLERKS OF PETTY SESSIONS :—
Salaries and duties of, 135.
Eden, 184.
CLIFFORD, JAMES :—The Case of, injured at Iron Cove Bridge, 184.
COBAR :—Water Supply, 144.
COBBORA :—Police Station, 37.
COBCROFT, SURVEYOR :—Work done by, 174.
COLLIER, Mr. :—Telegraph Assistant, Cassilis, 175
COMAN, Mr. E. J. :—Appointment of to the Commission of the Peace, 149.
COMMISSIONS :—
On Friendly Societies, 23, 168.
On Theatres, 159.
COMMONS :—
Gundagai, 70.
Happy Valley, 180.
COMPENSATION TO SCHOOL TEACHERS :—For loss of income, 128.
CONARGO :—Road to Hartwood, 121.
CONDITIONAL PURCHASES (See "CROWN LANDS"; also "MINERALS AND MINING.")
CONDOBOLIN :—Public School, 105.

Q

QUESTIONS (*continued*) :—
CONDUCT LIST :—Railway Locomotive Branch, 58.
CONSERVATION OF WATER :—In Country Districts, 122.
CONTRACT :—
With the Government, 54, 71.
For Government works without competition, 143.
COOK'S RIVER :—
Tolls on Road, 147, 163.
Tramway, 149, 173.
COOLAC :—Road between, and Gobarralong, 94.
COONAMBLE :—Breakwater, 128.
COPELAND :—Post Office, 61.
CORONERS INQUESTS :—In Gaols, 123.
COUNTRY DISTRICTS :—Conservation of Water, 122.
COUNTY MAP :—Laying upon Table of, 25.
COURT-HOUSE :—
Manilla, 36, 154.
Quirindi, 54.
Emmaville, 86.
Uralla, 107.
Tingha, 137.
Newtown, 148.
Parramatta, 154.
Tank for, Barraba, 180.
Eastern Suburbs, 204.
COURT OF PETTY SESSIONS :—Girilambone, 85.
CROWN LANDS :—
Sale of, by auction, 16.
William Howell's conditional purchase, 90.
Warren and Son's conditional purchase at Moree, 99.
Applications by agents for conditional purchases, 100, 154
Mr. George Day's conditional purchase, 100.
Sale of town lots, Nyngen, 108.
Cheques received in payment for, 122.
T. F. Mackenzie's conditional purchase, 142.
Measurement of conditional purchase, Molong, 149.
Auction sales at Moree and Narrabri, 155.
Unsurveyed conditional purchases and survey of swamp land in Electorate of The Macleay, 169.
Land Sale at Junee Junction, 175.
William Keys's conditional purchase at Gunnedah, 179.
Benjamin William Roberts's conditional purchase at Penrith, 183.
Parish Maps showing alienated, 25, 183, 191, 203.
Sold and offered for sale, 187.
Sold as country lots, 187.
Forfeited conditional purchases, 188.
Surveyed for auction sale, 195.
Henry Horne's conditional purchase at Molong, 195.
CRUELTY TO ANIMALS :—Slaughtering of, by the Jewish method, 62.
CUDAL :—Recreation Ground, 159.
CURATOR :—Public School, 37.
CURBAN :—Public School, 37.
CUSTOMS :—
Border Duties, 16.
Alleged disagreements in Department, 62.
Imports and exports at Moama, 173.
Officer at Port Stephens, 191.
DALTON, MR. JAMES, J.P. :—Connection of, with Irish Land League at Orange, 85, 108, 173.
DAM ON THE BILLABONG :—At Jerilderie, 49.
DARLING HARBOUR :—Amount paid to witnesses in resumption cases, 157.
DAUNT, EDWARD RUSSELL :—Admitted to bail, 205.
DAVIES, JOHN, ESQUIRE :—Entertainment of children at the Laying of the Foundation Stone of the Statue to the Queen, 34.
DAVIS, JAMES :—Claim of, as the discoverer of tin, 36.
DAW, JAMES :—Claim of, as the discoverer of tin, 36.
DAY, GEORGE :—Conditional purchase of, 100.
DE BOOS, MR. CHARLES :—Complaints against, 84, 111, 122.
DENILIQUIN :—
Road to Urana, 104.
Revenue collected at, 173.
DENMAN :—Road to Coolah, 59.
DIAMOND DRILLS :—Applications for, 93.
DISTRICT COURTS :—
Merriwa and Cassilis, 62.
Salaries of Judges, 139, 188.
DISTRICT SURVEY OFFICE :—Narrabri, 101.
DOUGHBOY HOLLOW RUN :—Lease of, 157.
DRAWBRIDGE :—Lismore, 137.
DREDGES :—Eight-hour system of labour on, 115.
DREDGING AND DISCHARGING SILT :—Amount and cost of, 79
DUBBO :—Police Magistrate, 163.
DUMMYING :—Prosecutions for, 85.
DUTY, AMERICAN :—On Australian wool, 143.
EASTERN SUBURBS :—Court-house, 204.
EDEN :—Clerk of Petty Sessions, 184.
EDUCATION :—
Local School Boards, 16.
History in Public Schools, 23.
Number of Superior Schools, 23.
Schools at Botany, 33.
Planting School-grounds with trees, 36.

QUESTIONS (*continued*) :—
EDUCATION (*continued*) :—
Public School, Curban, 37.
Public School, Golspie, 45.
Schools at Balmain East, and West Leichhardt, 45.
School Attendance Officers, 45, 54.
Officers employed in the Architectural Branch, 46.
School Teachers classification, 46, 83.
Public School Teacher at Pokolbin, 49.
School at Castle Mountain, 57.
Public Schools at Pyrmont, 58.
Public School at Stroud, 58.
Public School, Glenmore Road, 71.
Records of punishments in Public Schools, 77.
School Buildings, Jugiong, 80.
Public School at Bridgewater, 80.
Qualifications of Teachers, 83.
Industrial, 85.
Public School at Kangaroo Valley, 85.
Public School, Kiama, 99.
Public School, Forest Lodge, 104.
Public School, Condobolin, 105.
Regulation as to female teachers sitting during school hours, 111.
Vote for technical education, 111, 116.
Training Masters for Public Schools, 111.
School accommodation, Two-mile Creek, 122.
Cleaning Public Schools, 122.
Half-time Schools, 128.
Compensation to Teachers for loss of income, 128.
Public School, Molly, 128.
Public School, Stanmore, 128.
School Buildings, Little Plain, 137.
Public School, Gilgai, 137.
Holiday at Wagga Wagga School, 142.
Evening School, Tamworth West, 154.
Public School, Manilla, 154.
School Attendance Officers, 155.
Public School, Narrabri, 175.
Grammar Schools, 176.
EIGHT-HOUR SYSTEM OF LABOUR :—
Adoption of, in the Public Works Department, 23.
Public Holiday, 80.
On Dredges, 115.
At Hudson Brothers, 168.
ELECTORAL :—
Additional Member for St. Leonards, 94.
Electorates entitled to additional representatives, 94.
ELECTRIC LIGHT :—
Redfern Railway Station, 127.
South Head, 143.
EMMAVILLE :—
Water Supply, 16.
Court-house, 86.
Post and Telegraph Office, 86.
EMU PLAINS :—Station Buildings, 34.
ENDOWMENT OF MUNICIPALITIES :—Sum for, 123.
ENGINE DRIVERS :—Hours of work of, 34, 79, 108.
ERYSIPELAS HOSPITAL :—Parramatta, 127, 149.
EUGOWRIE :—Recreation Ground, 159.
EXHIBITION (See "GARDEN PALACE.")
EXPLOSIVES :—Storage of, &c., 33, 141.
FEMALE TEACHERS :—Sitting of during school hours, 111.
FERRIES (See "BRIDGES.")
FINANCE :—Payments from Treasurer's advance account, 196.
FIRE BRIGADES BILL :—
Introduction of, 131.
Recommittal of, 192.
FISHERIES :—Conduct of Mr. Oliver, Assistant Inspector, 100
FOOD AND DRINK :—Adulteration of, 181.
FORBES, MR. DISTRICT COURT JUDGE :—Sentence passed by on prisoner, 113.
FORBES :—
Gaol, 84.
Free Public Library, 104.
Farm for Aborigines, 111.
FORESTS BILL :—Procedure with, 143.
FOREST LODGE :—
Public School, 104.
Tramway, 137.
FRIENDLY SOCIETIES COMMISSION :—Cost of, &c., 23, 168.
FUMIGATING APPARATUS :—At the Quarantine Station, 188.
GAOLS :—
Forbes, 84.
Coroners Inquests in, 123.
GARDEN PALACE :—
Loss occasioned by destruction of, 89, 98, 122.
Supervision and care of, 93.
Reward for clue to origin of fire, 159.
Plans destroyed in, 100, 101, 189.
Safes used in, 105, 131.
Watchmen, 142.
Removal of ruins, 143.
Works of Art in, 201.

Q

QUESTIONS (*continued*) :—
- GARRETT, MR. THOMAS :—Application of, to mine under roads, rivers, &c., 30.
- GAS :—
  - For Railway purposes, 35.
  - On Peel River Bridge, 36.
- GEORGE'S HEAD BATTERY :—Tenders for construction of, 49.
- GILGAI :—Public School, 137.
- GIRILAMBONE :—
  - Court of Petty Sessions, 85.
  - Railway Station, 85.
  - Tank, 85.
- GLEBE ISLAND :—
  - Boiling-down Establishment, 138.
  - Abattoirs, 192.
- GLEBE POINT :—Tramway, 137.
- GLEN INNES :—
  - Railway to Inverell, 148.
  - Police Magistrate, 179.
- GLENMORE ROAD :—Public School, 71.
- GOLD (See "MINERALS AND MINING.")
- GOLSPIE :—Public School, 45.
- GOOLAGONG :—Police protection, 45.
- GORDON :—Roads in county of, 65.
- GOSFORD :—Blankets for aboriginals, 75.
- GOULBURN STREET :—Widening of 138.
- GOVERNMENT :—
  - Water service to buildings, 57.
  - Advertisements, 89.
  - Insurance of property against fire, 89, 107.
  - Contracts for works without competition, 143.
  - Wages of workmen in workshops, 138.
- GOVERNOR'S AIDE-DE-CAMP :—Railway accommodation for, 192.
- GRAFTON :—Plans of survey from, to Tenterfield and Glen Innes, 100.
- GRAMMAR SCHOOLS :—Establishment of, 176.
- GRETA :—Water supply, 163.
- GUARDS, RAILWAY :—Hours of work of, 79, 108.
- GUNDAGAI :—
  - Depasturing sheep on Common, 70.
  - Railway to Cootamundra, 104.
  - Hospital, 142.
- "GUNGA" :—Quarantining of, 37.
- GUNNEDAH :—Return in reference to Railway, 58.
- GUNPOWDER AND OTHER EXPLOSIVES :—Storage of, &c., 33, 141.
- HALF-TIME SCHOOLS (See "EDUCATION.")
- HAPPY VALLEY :—Common at, 180.
- HARBOUR :—Port Macquarie, 189.
- HARRIS PARK, PARRAMATTA :—Streets in, 168.
- HARRIS-STREET TRAMWAY :—Completion of, 71.
- HASTINGS RIVER, THE :—Re-Survey of, 189.
- HAWKESBURY :—Railway Bridge, 149.
- HAYES, MRS :—Case of; money collected in aid of, 188.
- HOLIDAY :—
  - In connection with the Northern Agricultural Association, 42.
  - Bank, in Northern Districts, 145.
- HOLMES, MR. YETMAN :—Papers referring to, 180.
- HOMEBUSH :—
  - Railway to Waratah and Newcastle, 16, 98, 122.
  - Burning of Railway Plans in Garden Palace, 98.
  - Railway to the Hawkesbury, 168.
- HORNE, HENRY :—Conditional Purchase of, at Molong, 195.
- HORSES :—For Telegraph Department, 158, 174.
- HOSPITAL :—
  - Prince Alfred, 17.
  - Gundagai, 142.
  - Erysipelas, Parramatta, 127, 149.
- HOWELL, WILLIAM :—Conditional Purchase of, 90.
- HOWE ISLAND (See "LORD HOWE ISLAND.")
- HUDSON BROTHERS :—
  - Tram-cars supplied by, 168.
  - Eight-hour system of labour, 168.
  - Railway Carriages built by, 175.
- HUGHES, JOSHUA :—Claim of, to land at Parramatta, 157.
- HULONG :—Railway Station, 104.
- HUNTER RIVER STEAMERS :—
  - Carrying Capacity of, 196.
  - Sale of Liquor on, 196.
- HUNTER'S HILL :—Recreation Reserve, 62.
- ILLAWARRA :—Railway, 175.
- IMMIGRATION :—
  - Miss Kate Raby's Scheme, 135.
  - Emigration of labourers, 157.
  - Immigrants by the "Northampton," 167.
  - Mr. Wise, agent for, 174.
  - Case of Mrs. Hayes, 188.
- INDUSTRIAL EDUCATION :—Under the Department of Public Instruction, 85.
- INFIRMARY :—Case of Janet M'Aughy, 148.
- INQUESTS :—In Gaols, 123.

QUESTIONS (*continued*) :—
- INSOLVENT COURT :—
  - Salary of Chief Commissioner of, 139.
  - Lease of a house for, built by Mr. District Court Judge Josephson, 187.
- INSPECTOR OF WEIGHTS AND MEASURES :—Duties, &c., 86.
- INSURANCE OF GOVERNMENT PROPERTY :—Against Fire, 89, 107.
- INVENTIONS :—Letters of Registration of, 174.
- INVERELL :—Police Magistrate at, 179.
- IRISH LAND LEAGUE AT ORANGE :—Presided over by Mr. James Dalton, J.P., 85, 108.
- IRON COVE BRIDGE :—
  - Compensation to men injured in construction of, 45, 138, 184.
  - Completion of, and making Road, 80.
  - Opening of, 141.
- JERILDERIE :—Dam on the Billabong at, 49.
- JUDGES :—Salaries of, 80, 84, 139, 148.
- JUGIONG :—
  - Public School Buildings, 80.
  - Recreation Reserve, 94.
- JUNCTION BRICK COMPANY :—
  - Contract of with the Government, 54.
  - Registration of, 71.
- JUNEE :—
  - Railway Crossing at Junction, 76.
  - Station Buildings, 121.
  - Land Sale at Junction, 175.
- JURY LISTS :—Special, 35.
- KANGAROO VALLEY :—Public School, 85.
- KEYS, WILLIAM :—Conditional Purchase of, at Gunnedah, 179.
- KIAMA :—Public School, 99.
- KING'S SCHOOL CADET CORPS :—Ammunition for, 136.
- LACHLAN RIVER :—Weir across, 62.
- LAND DUMMYING :—Prosecutions for, 85.
- LAND RESUMED :—
  - Sydney Water Supply, 35.
  - For Public Purposes, 148.
- LAND AT RANDWICK :—Sale of, for Building, 153.
- LAND IN THE ELECTORATE OF THE NAMOI :—Dedication of, 136.
- LAND FOR RAILWAY PURPOSES :—On Benevolent Asylum site, 116, 137.
- LAND SALE :—
  - At Junee Junction, 175.
  - At Railway Station, Narrabri, 180.
- LANDS DEPARTMENT :—Salaries of Clerks in, 70.
- LANDS TITLES DEPARTMENT :—Alleged arrear of work in, 69, 139.
- LARNACH, MR. :—Applications of to mine under roads, rivers, &c., 30.
- LARRIKINISM :—Bill for Suppression of, 42.
- LAWSON :—Pipes lying near main road, 115.
- LEICHHARDT :—New School, 45.
- LETTER CARRIERS :—Pay of, 98, 204.
- LETTER SORTERS :—Pay of, 204.
- LETTERS OF REGISTRATION OF INVENTIONS :—Return to Order, 174.
- LIBRARY :—
  - Loan of Books from Free Public, to Country Libraries, 34.
  - Free Public, Forbes, 104.
  - Building of new, Sydney, 116.
- LICENSES AND FINES :—Cabmens, 138.
- LICENSING BENCHES :—Particulars of Appointments to, 76.
- LICENSING ACT :—Amendment of, 111.
- LIGHT :—On South Head of Botany Bay, 163.
- LINDSAY, ALEXANDER :—Liberation of from Prison, 42.
- LISMORE :—Drawbridge at, 137.
- LITTLE BAY :—Stores at Sanatarium, 167.
- LITTLE PLAIN :—School Buildings, 137.
- LIVINGSTONE FALLS :—Road to, 115.
- LOCAL GOVERNMENT BILL :—Procedure with, 143.
- LORD HOWE ISLAND :—Proceedings of Honorable John Bowie Wilson with regard to Captain Armstrong, 24, 103, 136, 158.
  - Plants and Seeds received from, 188.
- LUNATIC ASYLUMS :—
  - Parramatta, 42, 123.
  - Visits of Dr. Roberts, 69.
- MACKENZIE, T. F. :—Conditional Purchase of, 142.
- MACLEAY ELECTORATE :—Unsurveyed Conditional Purchases in, 169.
- M'AUGHY, JANET :—Case of, 148.
- M'GLEDE, EDMUND :—Compensation to, 24, 141.
- MAGAZINE, POWDER :—Mud Island, 94.
- MAIL GUARDS :—Salaries of, 204
- MANILLA :—
  - Bridge, 29, 154.
  - Police Quarters and Court-house, 36, 154.
  - Public School, 154.
- MAP :—Showing Crown Lands alienated in each County, 25, 183, 191, 203.
- MECHANICS INSTITUTE :—Adamstown, 58.

Q

QUESTIONS (*continued*) :—
MERRIWA :—District Court, 62.
MEYER, MR. OSCAR :—Remuneration to, as representative of this Colony at Venice, 158.
MIDDLE HARBOUR :—Land occupied by Mr. Anderson for Training School, 142.
MILLER'S POINT :—Tramway, 104.
MINERALS AND MINING :—
Mineral Conditional Purchase made by J. and A. Brown, 24.
Applications of Messrs. Garrett and Larnach to mine under roads, rivers, &c., 30.
Claims of James Daw and James Davis as the discoverers of Tin, 36.
Applications for Mineral Conditional Purchases, 69, 187.
Mineral Leases, Vegetable Creek, 84.
Mode of taking up Conditional Purchases, 104.
Provisions dealings with evasions of Acts, 112.
Applications for Gold-mining Leases, 179.
Chief Mining Surveyor, 203.
MINING BILL :—Amending, 184.
MITTAGONG :—Railway Station, 95.
MOAMA :—Imports and Exports at, 173.
MOLLY :—Public School, 128.
MOLONG :—
Measurement of Conditional Purchases in District of, 149.
Recreation Ground, 159.
Police Magistrate, 192.
Henry Horne's Conditional Purchase, 195.
MOONBI :—Stock Road to Tamworth, 53, 180.
MOORE PARK :—
Agricultural Society's Ground, 83.
Waiting-room for Tramway Passengers, 204.
MOORE-STREET :—
Extension of, 122.
Alignment of, 164.
MOREE :—
Conditional Purchase of Warne & Sons, 99.
Business of Land Office at, 138.
Auction Sales, 155.
MUDGEE :—Police Buildings, 113.
MUD ISLAND :—Powder Magazine, 94.
MUNFORD AND BLOMFIELD :—Case of, 94.
MUNICIPALITIES :—Endowment of, 123.
MURPHY, STEPHEN :—Case of, 112.
MURRUMBURRAH :—Railway to Blayney, 15, 101, 163.
MURRURUNDI :—
Police Paddock, 80, 100.
Telegraph Office, 84.
Refreshment-room at Station, 95, 153.
MUSWELLBROOK :—Recreation Ground, 174.
NAMOI, THE :—
Dedication of Land in Electorate of, 136.
Tanks on Roads in Electorate of, 168.
NARRABEEN LAGOON :—Bridge, 49.
NARRABRI :—
Tanks on road, 15.
Police Barracks, 36.
Station at Terminus, 54.
Stock road to Railway terminus, 70.
Road to Bingera, 94.
Circuit Courts, 98.
Building on Railway Terminus, 100.
District Survey Office, 101.
Auction Land Sales, 155.
Post and Telegraph Office, 175.
Public School, 175.
Approaches to Railway Station, 176.
Sale of Land at Railway Station, 180.
NEWCASTLE :—
Government Railways used by Coal Companies, 41.
Tramway to Wallsend, 83.
NEW ENGLAND :—Railway from the Clarence to, 204.
NEWTOWN :—
Tolls, 35, 147, 163.
Resumption of land for Railway purposes, 80.
Railway bridge, 81.
Road, 81.
Recreation ground, 97.
Railway Station, 148.
Court-house, 148.
Tramway to Cook's River, 149, 173.
"NORTHAMPTON" :—Immigrants by, 167.
NORTHERN AGRICULTURAL ASSOCIATION :—Holiday in connection with, 42.
NORTHERN DISTRICTS :—Bank holiday in, 145.
NORTH RICHMOND :—Telegraphic communication, 95.
NORTH SHORE :—
Tramway, 50.
Bridge to connect with Sydney, 29, 53, 147, 183, 203.
NUNDLE :—
Police Reserve, 36, 180.
Railway Platform and Siding at Junction of Armidale Road, 206.

QUESTIONS (*continued*) :—
NYMAGEE :—Road to Nyngen, 97.
NYNGEN :—Sale of town lots, 108.
OAKEY CREEK :—Bridge, 29.
O'BRIEN, ELIZA :—Case against for fortune-telling, 127.
OFFICIAL ASSIGNEE :—Investigation into Mr. R. H. Sempill's accounts, 179.
OLIVER, MR. :—Conduct of, as Assistant Inspector of Fisheries, 100.
ORANGE :—
Railway to Wilcannia, 90.
Meeting of Irish Land League in School of Arts, 85, 108, 173.
Railway to Molong, 144.
Police Magistrate, 163.
PAMPHLETS, RESERVE :—
Preparation of, 70.
PARISH MAPS :—Showing Crown Lands alienated, 183, 191, 203.
PARKES :—Police Buildings, 84.
PARLIAMENT :—Site for New Houses of, 158.
PARLIAMENTARY REFRESHMENT ROOM :—Meetings of Committee, 149.
PARRAMATTA :—
Railway passenger traffic, 34.
Lunatic Asylum, 42, 123.
Erysipelas Hospital, 127, 149.
Vehicles for prisoners for trial, 154.
Court-house, 154.
Claim of Joshua Hughes to land at, 157.
Streets in Harris Park, 168.
PATERSON RIVER :—Bridge over, 184, 191.
PEEL RIVER :—Bridge, 29, 36.
PETERSHAM :—High level Bridge, 61.
PIGEON GROVE :—Road through, Manning River, 189.
PLANTS AND SEEDS :—Received from Lord Howe Island, 188.
PLATTSBURG :—Recreation Reserve, 121.
PLOMER, THE PRISONER :—
Former convictions against, 36.
Judge's report, 62, 98.
POKOLBIN :—Public School Teacher at, 49.
POLICE :—
Quarters, Manilla, 36.
Barracks, Narrabri, 36.
Reserve, Nundle, 36.
Station, Cobbora, 37.
Goolagong, 45.
Increase of Pay to, 79.
Paddock, Murrurundi, 80, 100.
Buildings, Parkes, 84.
Buildings, Mudgee, 113.
Search by, for the missing Mr. Baker, 159.
Reserve at Nundle, 180.
POLICE MAGISTRATE :—
At Orange and Dubbo, 163.
At Inverell, Tenterfield, and Glen Innes, 179.
Molong, 192.
PORT MACQUARIE HARBOUR :—Removal of the wreck of the "Ballina," 65, 189.
PORT STEPHENS :—Customs Officer at, 191.
POSTAL :—
Contract of Messrs. Alderson and Sons, 33.
Pay of Mail Guards, 46, 62.
Post Office, Quirindi, 54.
Post Office, Bourke-street, Surry Hills, 58.
Post Office, Copeland, 61.
Post and Telegraph Office, Wingham, 65.
Do Stroud, 70.
Do Tamworth, 77.
Do South Creek, 79.
Do Emmaville, 86.
Do St. Leonards, 89.
Do Uralla, 138.
Do Narrabri, 175.
Mails between Sydney and Clarendon, 90.
Pay of Letter Carriers, 98.
Salaries of Mail Guards, Sorters, and Letter Carriers, 204.
POTTS'S POINT :—Tramway to, 153.
POUND AT STROUD :—Erection of, 58.
POWDER MAGAZINE :—Mud Island, 94.
PRISON :—Trial Bay, 122.
PRISONER JOSEPH BELL :—Petition for Remission of sentence, 201.
PUBLIC BUILDINGS (See "GOVERNMENT.")
PUBLIC LIBRARY (See "LIBRARY.")
PUBLIC RECREATION (See "RESERVES.")
PUBLIC SCHOOLS (See "EDUCATION.")
PUNISHMENT IN PUBLIC SCHOOLS (See "EDUCATION.")
PYRMONT :—
Bridge, 16, 57.
Public Schools, 58.
Bridge road, 196.
Bridge Company, 196.

Q

QUESTIONS (*continued*):
QUARANTINE:—
Report of Commission, 65.
Fumigating Apparatus at Station, 188.
QUEEN'S STATUE:—Pedestal for, 147.
QUEEN-STREET:—Tramway to, 169.
QUIRINDI:—
Post Office, 54.
Court-house, 54.
Road between Borah Creek and, 206.
RABBIT PEST:—Spread of, 144.
RABY, MISS KATE:—Immigration Scheme of, 135.
RAILWAYS:—
Locomotive steel crank axles, 15.
Murrumburrah to Blayney, 15, 101, 163.
Homebush to Waratah, 16, 98, 122, 168.
Redfern to Circular Quay, 17.
Between Orange and Molong to Forbes, 24.
From Wagga Wagga to Tumberumbah, 24.
From Port Jackson to line from Homebush to Waratah, 24.
Supply of Cattle trucks, 30.
Wages of Employés, 33, 95, 108, 109, 148, 167.
Working hours of drivers, firemen, and guards, 34, 79, 108.
Station buildings at Emu Plains, 34.
Passenger traffic, Parramatta, 34.
Gas on, 35.
Passengers luggage, 36.
Lines used by Coal Companies at Newcastle, 41.
Mail Guards, 46, 62.
Blacktown Station, 46 (2.)
Singleton Station, 46, 76, 95, 153.
Boggabri to Narrabri, 53.
Station at Narrabri Terminus, 54, 176, 180.
Traffic on Sunday, 57.
Gunnedah, 58.
Conduct list, Locomotive Branch, 58.
High-level Bridge at Petersham, 61.
Bridge, William Henry-street, 61.
Buildings at Turrawan, 70.
Traffic to Singleton, 76.
Crossing at Junee Junction, 76.
Hours of work of Drivers and Guards on Western Line, 79.
Resumption of Land for, at Newtown, 80.
Bridge, Newtown, 81.
Contract for the Albury extension, 81.
Station near Girilambone, 85.
Orange to Wilcannia, 90.
Mittagong Station, 95.
Catering for Refreshment rooms at Singleton and Murrurundi, 95, 153.
Buildings at Windsor, 95.
Building on terminus, Narrabri, 100.
Plans, Grafton to Glen Innes and Grafton to Tenterfield, 100.
Removal of Employes from Wagga Wagga to Junee, 103.
Station Hulong, 104.
Between Gundagai and Cootamundra, 104.
Advertising on Stations, 112.
Passenger Rates, 115.
Tourist trains, 115.
Station, Springwood, 116.
Resumption of land for, at Redfern, 116.
Board to inquire into goods rates, 116.
Buildings at Junee Junction, 121.
Trucking yards at South Wagga, 121.
Plans, Homebush to Newcastle, 122.
Electric Light, Redfern Station, 127.
Holiday on opening Line to Warren, 128.
Accident at Woodford, 137.
Resumption of Benevolent Asylum Site, 137.
Orange to Molong, 144.
Planting wattles on Southern Line, 144.
Newtown Station, 148.
Surveys Glen Innes to Inverell, 148.
Bridge over the Hawkesbury, 149.
To Wilcannia, 153.
Tanks on reserves, 158.
Sleeping cars, 159.
To the Hawkesbury, 168.
Robbery at Darling Harbour Station, 174, 181.
Additional Train to Campbelltown, 175.
Illawarra, 175.
Carriages built by Hudson Brothers, 175.
Carriage Door-fasteners, 180.
Accommodation for the Governor's Aide-de-camp, 192.
From The Clarence to New England, 204.
Rails for Northern Extension, 204.
Platform and Siding at Junction of Armidale and Nundle Roads, 206.

QUESTIONS (*continued*):—
RANDWICK:—Sale of land at, 153.
REAL PROPERTY ACT:—Working of clause 4 of the Further Amendment Act of 1877, 97.
REBATES:—Circular Quay, 145.
RECREATION GROUND:—
Alexandria, 173.
Muswellbrook, 174.
Additional Grant for, 189.
REDFERN:—
Extension of Railway Station, 116.
Electric Light at Station, 127.
REFRESHMENT ROOM:—
Singleton and Murrurundi Stations, 95, 153.
Parliamentary, 149.
REGISTRAR GENERAL'S DEPARTMENT:—Business of, 35.
RENWICK *ats.* SMITH:—New trial, 192.
REPORT OF COMMISSION:—On Quarantine, 65.
RESERVES:—
Hunter's Hill, 62.
Blue Mountains, 77.
Jugiong, 94.
Newtown, 97.
Money on Estimates to purchase, 103.
Wallsend and Plattsburg, 121.
Tanks on Railway, 158.
Molong, Cudal, and Eugowrie, 159.
Police at Nundle, 36, 180.
RESERVE PAMPHLETS:—Preparation of, 70.
RESUMPTION OF LAND:—
For Railway Purposes at Newtown, 80.
For extension of Redfern Station, 116.
For Sydney Water Supply, 35.
For Public Purposes, 148.
At Darling Harbour, 157.
RICHMOND:—Water Supply, 148.
ROADS:—
Newtown and Annandale, 35.
Borah Creek to Quirindi, 36, 206.
Stock, Moonbi to Tamworth, 53, 180.
Denman to Coolah, 59.
Number of Cadets articled in Department, 62.
In the County of Gordon, 65.
Stock, to Narrabri Railway Terminus, 70.
Tolls on South Head and other roads, 71.
Newtown, 81.
Narrabri to Bingera, 94.
Messrs. Munford & Blomfield, 94.
Between Coolac and Gobarralong, 94.
Nymagee to Nyngen, 97.
Deniliquin to Urana, 104.
Warren to Coonamble, 108.
Lawson, 115.
To Livingstone Falls, 115.
Conargo to Hartwood, 121.
Bourke to Wanaaring, 121.
Extension of Moore-street, 122, 164.
Widening of Campbell-street, 138.
Widening of Goulburn-street, 138.
Tolls on Newtown and Cook's River Roads, 147, 163.
Great Northern at Armidale, 159.
Streets in the City, 164.
Tanks on in Namoi Electorate, 168.
Streets in Harris Park, Parramatta, 168.
Through Pigeon Grove, Manning River, 189.
Pyrmont Bridge, 196.
South Head, 204.
ROBBERY:—At Darling Harbour Railway Station, 174, 181.
ROBERTS, BENJAMIN WILLIAM:—C.P. at Penrith, 183.
ROBERTS, DR.:—Official position of, 17, 69.
ROMAN CATHOLIC CHURCH:—Walgett, 61.
ROOKWOOD CEMETERY:—Accommodation at, 16.
RYDE:—Tramway, 167.
SAFES:—
Used in the Garden Palace, 105, 131.
Used in the Public Offices, 131.
SALARIES:—
Increase of, of the Supreme Court Judges, 80, 84, 139, 148.
Of District Courts Judges, 139, 188.
SALE OF LIQUOR:—On Hunter River Steamers, 196.
SAMUEL, SIR SAUL:—Recommendation of, for K.C.M.G., 103.
SANDY CREEK:—Bridge, 144.
SAUNDERS, MR. OLIVER:—Appointment of, to Commission of the Peace, 180.
SAVINGS BANK, NEW SOUTH WALES:—Particulars of Meetings and names of Trustees, 144.
SCHOOLS (See "EDUCATION.")
SCHOOLS OF ARTS, BATHURST AND ORANGE:—Meeting of Irish Land League in, 85, 168, 173.

Q

QUESTIONS (*continued*) :—
SEEDS :—Plants and, received from Lord Howe Island, 188.
SEMPILL, MR. R. H. :—Late Official Assignee, 179.
SEWERAGE OF SYDNEY :—Scheme for, 148.
SHOALHAVEN RIVER :—Bridge over, 184.
SILT :—Dredging and discharging, 79.
SIMS, WILLIAM AND JOHN :—Employment of, in the Sheriff's Department, 34.
SINGLETON :—
Classification of Station, 46, 95.
Railway passenger traffic, 76.
Water Supply, 148.
Refreshment-room at station, 95, 153.
SITE FOR NEW HOUSES OF PARLIAMENT :—Lately occupied by Garden Palace, 158.
SLEEPING CARS :—Particulars of running, 159.
SMALL-POX :—Quarantining of the "Gunga," 37.
SMITH *v.* RENWICK :—New Trial, 192.
SOUTH CREEK :—
Post and Telegraph Office, 79.
Bridge on, Western Road, 80.
SOUTH HEAD ROADS :—
Tolls on, 71.
Bill to deal with, 204.
SOUTH HEAD :—Electric Light, 143.
SOUTH WAGGA :—Trucking yards, 121.
SPECIAL JURY LISTS :—Compilation of, 35.
SPRINGWOOD :—Railway Station, 116.
ST. LEONARDS :—
Post and Telegraph Office, 89.
Additional Member, 94.
STANMORE :—Public School, 128.
STEAMERS :—
Carrying Capacity and boat carried by Hunter River, 196.
Sale of Liquor on Hunter River, 196.
STOCK RETURNS :—Collection of, 61.
STOCK ROAD :—
From Moonbi to Tamworth, 53, 180.
To Narrabri Railway Terminus, 70.
STOCKS, MR. J., J.P. :—Papers in case of, 164.
STORES :—At Little Bay Sanitarium, 167.
STREETS :—
Alignment of, in the City, Moore-street, 164.
In Harris Park, Parramatta, 168.
STROUD :—
Public School, 58.
Pound, 58.
Post and Telegraph Office, 70.
SUPREME COURT :—
Business of, 142.
Salaries of Judges, 148.
SYDNEY :—
Water Supply, 15, 35.
Sewerage scheme, 148.
TAMWORTH :—
Stock Road from Moonbi, 53, 180.
Post and Telegraph Office, 77.
Evening School, 153.
Vehicles for prisoners for trial at, 154.
TANKS :—
On Narrabri and Moree Road, 15.
Giralambone, 85.
On railway reserves, 158.
On roads in Electorate of the Namoi, 168.
At Court-house, Barraba, 180.
TEACHERS (See "EDUCATION.")
TECHNICAL EDUCATION :—Vote for, 111, 116.
TECHNICAL COLLEGE :—Particulars of, 97.
TELEGRAPHS :—
Delivery of Messages, 36.
Transmission of Government Messages to London, 75.
Office, Murrurundi, 84.
Delivery of Telegrams within the City, 85.
Communication with North Richmond, 95.
Telegrams for Blue Mountains, 116.
Horses for Department, 159, 174.
Mr. Collier, Assistant, Cassilis, 175.
TENTERFIELD :—Police Magistrate, 179.
THEATRES :—Commission on, 159.
TINGHA :—Court House, 137.
TOLLBAR :—Broken Back Bridge, 116.
TOLLS :—
Newtown, Cook's River, and Annandale roads, 35, 147, 153.
South Head and other roads, 71.
TOURIST TRAINS :—Rates for, 115.
TRAINING MASTERS FOR PUBLIC SCHOOLS :—Examination of, 111.
TRAMWAYS :—
Flapboards on cars, 16.
Darlinghurst to St. Matthias's Church, 23.

QUESTIONS (*continued*) :—
TRAMWAYS (*continued*) :—
Marrickville to Canterbury and Bankstown, 24, 100.
Engagement and pay of Conductors, 29, 107.
Accidents, 30, 46, 181.
North Shore, 50.
Accounts, 54.
Running of trams on race days, 54.
Traffic on Sunday, 57.
Through Camperdown, Leichhardt, and Elswick Estates, 58.
Newtown, 65.
Camperdown, 65.
Harris-street, 71.
Bondi, 77.
Newcastle to Wallsend, 83.
Miller's Point, 104.
Safety guards for motors, 104.
Distances and fares, 107.
Glebe Point and Forest Lodge, 137.
Newtown to Cook's River, 149, 173.
Potts's Point, 153.
Balmain and Ryde, 167.
Cars supplied by Hudson Brothers, 168.
Conductors clothing, 168.
Queen-street, 169.
Waiting-room for Passengers at Moore Park, 204.
TREASURER'S ADVANCE ACCOUNT :—Payments from under various headings, 196.
TREES :—Planting of, on School grounds, 36.
TRIAL BAY :—Prison, 122.
TRUCKING YARDS :—South Wagga, 121.
TUMBERUMBA :—Bridge, 155.
TURRAWAN :—Railway buildings, 70.
TWO-MILE CREEK :—School accommodation, 122.
UNIVERSITY :—Particulars of, 97.
URALLA :—
Court-house, 107.
Post and Telegraph Office, 138.
VEGETABLE CREEK :—Mineral Leases, 84.
VENICE GEOGRAPHICAL CONGRESS :—Mr. Oscar Meyer, 158.
"VERNON" :—Drafting of boys to the "Wolverene," 69.
VOLUNTEERS :—
Ammunition for King's School Cadet Corps, 136.
And Artillery Forces, 201.
WAGES :—
Of Railway employés, 33, 95, 108, 109, 148.
Of workmen in Government Workshops, 138.
Of coach and waggon builders on railway works, 167.
WAGGA WAGGA :—School holiday, 142.
WALGETT :—Site for Roman Catholic Church purposes, 61.
WALLSEND :—Recreation reserve, 121.
WARIALDA :—Business of Land Office at, 138.
WARNER & SONS :—Conditional purchase of, at Moree, 99.
WARREN :—
Holiday on opening line to, 128.
Road to Coonamble, 108.
WATERPROOF CLOTHING :—For tram conductors, 168.
WATER SUPPLY :—
Sydney, 15, 35.
Emmaville, 16.
To Government buildings, 57.
Albury, 58.
Conservation of, in country districts, 122.
Cobar, 144.
Singleton, 148.
Richmond and Windsor, 148.
Greta, 163.
WATERLOO GRANT :—Reserve for Recreation on, 173.
WATTLES :—Planting of, on Southern line of Railway, 144.
WEATHER-SHEDS :—For cabmen, 127.
WEARNE :—Safes made by, 105, 131.
WEIGHTS AND MEASURES :—Inspecter of, 86.
WEIR :—Across the Lachlan River, 62.
WHARFAGE RATES AND REBATES :—Circular Quay, 53, 145.
WILCANNIA :—Railway to, 153.
WILLIAM HENRY-STREET :—Railway Bridge, 61.
WILLIAMS RIVER :—Bridge over, 191.
WINDSOR :—
Railway Buildings, 95.
Water supply, 148.
WINGHAM :—Post and Telegraph Office, 65.
WISE, MR. :—Agent for Immigration, 174.
"WOLVERENE" :—
Cost and maintenance of, 35.
Drafting of "Vernon" boys to, 69.
Payment of passages of officers and crew to England, 184.
WOODFORD :—Railway accident at, 137.
WOOL, AUSTRALIAN :—American duty on, 143.
YOUNG :—Circuit Court, 195.

REFERENCES TO THE VOTES AND PROCEEDINGS, VOL. I—SESSION 1882.	PAPERS. VOL.	PAGE.
Q		
QUIN, EDWARD, ESQUIRE :—		
Return of, as Member for Wentworth, in room of William Adams Brodribb, Esquire, 1 ; sworn, 2.		
QUORUM (See "NO QUORUM.")		
R		
RABBIT PEST :—		
Reports of Inspectors, laid on Table, 155.	4	1509
RAILWAYS :—		
STATION SIDINGS AND BUILDINGS :—		
Return showing expenditure on, laid on Table, 18	4	1303
PREMISES AT COOTAMUNDRA :—		
Motion made (*Mr. William Forster*) for correspondence, minutes, &c., having reference to, 38 ; Return to Order laid on Table, and not ordered to be printed, 150		
REPORTS OF TRIAL SURVEYORS :—		
Return to Order (*Session* 1881) laid on Table, and not ordered to be printed, 42.		
FROM REDFERN TO THE CIRCULAR QUAY :—		
Motion made (*Mr. Pigott*) to postpone notice in reference to, 51.		
Motion made (*Mr. Pigott*) in favour of and negatived, 118.		
SLEEPING CARS :—		
Motion made (*Mr. McElhone*) for copies of correspondence, showing price of those manufactured in America, and those manufactured by Hudson Brothers, 86.		
TICKETS ISSUED FOR THE SINGLETON SHOW :—		
Return showing number of, in August, 1882, and the amount received for the same, laid on Table, 96		1331
CONNECTION OF SOUTHERN AND WESTERN LINES :—		
Petition from Grenfell and district in favour of, presented, 113		1349
MR. CASTNER'S CONTRACT FOR GAS :—		
Copy of contracts and agreements entered into, laid on Table, 123		1353
EXTENSION FROM NARRABRI TO WALGETT :—		
Petition from residents of Walgett in favour of, presented, 150	4	1351
RESUMPTION OF BENEVOLENT ASYLUM SITE FOR RAILWAY PURPOSES :—		
Paper respecting recommendation of the Hon. John Sutherland for, laid on Table, 150		1359
FREE PASSES :—		
Return to Order (*Session* 1881) laid on Table, 169		1335
REPORT OF COMMISSIONER FOR 1881 :—		
Laid on Table, 181		1095
SITE FOR STATION AT RYLSTONE :—		
Motion made (*Mr. Buchanan*), for copies of papers, letters, &c., in reference to, 189.		
REAL PROPERTY ACT :—		
Returns under, for 1881, laid on Table, 17	4	1545
RECOMMITTAL OF BILLS :—		
139, 145, 165, 185.		
RECREATION GROUNDS (See "RESERVES.")		
REDFERN (See "ELECTORAL.")		
REFRESHMENT COMMITTEE :—		
Sessional Order passed, 21.		
REGISTRATION, PLANS OF SUBDIVISION OF LAND BILL :—		
Motion made (*Mr. Murray*) for leave to bring in, 9.		
REGULATIONS :—		
LAID ON TABLE :—		
Additional, Gold-mining Leases, 19	4	769
Diseases in Sheep Acts Amendment Act, for district of Cobar, 19	2	1401
Press Messages and reduction of charges, 43	4	1087
H.M.C.S. "Wolverene," 46	4	11
Volunteer Naval Brigade, 46	4	47
Fisheries Act, 59	4	1365
Pastures and Stock Protection Act, 65	2	1391
Immigration, 106	2	953
Customs Regulation Act, 1879, 145	2	623
REPORTS :—		
LAID ON TABLE :—		
Insane, for 1881, 17	2	1061
Police, for 1881, 17	2	995
Infirm and Destitute Asylums, for 1881, 17	2	1135
Aborigines, 18	4	1525
Royal Commission of Quarantine Station, and Hulk "Faraway," 18	2	1157
Second do. do. 18	2	1289
Post Office, 18	4	1019
Grenfell Water Supply, 18	2	1429
Department of Lands for 1881, 18	2	173
Occupation of Crown Lands Branch of Department of Mines, 19	2	289
Department of Mines, for 1881, 19	4	609
Stock and Brands Branch of Department of Mines, for 1881, 19	2	1373
University, for 1881, 19	2	801
Grammar School, for 1881, 19	2	849
Museum, for 1881, 19	2	871
Free Public Library, for 1881, 19	2	901
Lord Howe Island, 25	4	1463
Charities, 43	2	1015
Public Instruction, for 1881, 46	2	629
State Children's Relief Department, 63	2	1103
His Honor Mr. Justice Windeyer on the case, Regina *v.* John Plomer—Rape—laid on Table, and not ordered to be printed, 71.		
Vaccination, for 1881, 98	2	1145

REFERENCES TO THE VOTES AND PROCEEDINGS, VOL. 1—SESSION 1882.	PAPERS. VOL.	PAGE.
R		
REPORTS (*continued*) :—		
LAID ON TABLE—(*continued*) :—		
Vital Statistics (Twenty-sixth), 98	3	663
Immigration for 1881, 139	2	945
Rabbit Pest, 155	4	1509
On frauds committed by H. V. Harris in the Lands Department, 164	2	429
Railways and Tramways, for 1881, 181	4	1095
Agent for Immigration on case of Mrs. Hayes, 189	2	955
"Vernon," 202	2	1149
ELECTIONS AND QUALIFICATIONS COMMITTEE :—		
Seat of John Mitchell Purves, Esquire,—The Clarence, 96	1	279
FROM SELECT COMMITTEES :—		
Forest Lodge, near Tarlo, Estate Bill, 150	4	1493
Blandford Proprietary School Bill, 164	2	857
Mrs. Clyne's conditional purchase, 181	2	403
Rotton's Estate Bill, 181	4	1503
Albury Gas Company's Bill, 184	4	1483
Dubbo Gas Company's Incorporation Bill, 198	4	1477
RESERVES :—		
APPLICATIONS TO MINE UNDER:—		
Return (in part) to Order (*Session* 1880-81), laid on Table, 19	4	757
PERICOOTA :—		
Petition from residents of Moama and district, praying that they may be again proclaimed open for selection, presented, 113	4	829
RECREATION GROUNDS :—		
Statement respecting, laid on Table, 131	4	1591
ON POCKATAROO AND OREEL RUNS :—		
Motion made (*Mr. Joseph P. Abbott*), for return showing particulars of, 177.		
RESERVES BILL (See "WATERING PLACES AND RESERVES BILL.")		
RESOLUTIONS :—		
FROM COMMITTEE OF THE WHOLE :—		
Reported, 26(1), 44(2), 47, 66(2), 129(3), 170, 177, 182(2).		
Agreed to, 26(1), 44(2), 47, 66(2), 129(3), 170, 177, 182(2).		
FROM COMMITTEE OF SUPPLY :—		
Reported, 47, 177.		
Agreed to, 47, 177.		
FROM COMMITTEE OF WAYS AND MEANS :—		
Reported, 47.		
Agreed to, 47.		
RESUMPTION OF LAND (See "LANDS RESUMED FOR PUBLIC PURPOSES.")		
RICE, JAMES, CONDITIONAL PURCHASE OF (See "CROWN LANDS.")		
RIGHT OF CHALLENGE OF JURORS IN FELONY AND MISDEMEANOUR AMENDMENT BILL :—		
Motion made (*Mr. Buchanan*) for leave to bring in, 5 ; read, 1°, 5 ; Order of the Day postponed, 7, 9 ; read 2°, committed, and no report from Committee, 31.		
RIVERS AND CAVES OF NEW SOUTH WALES :—		
Correspondence, &c., relating to exploration of, laid on Table, 19	5	
ROADS :—		
THROUGH LANDS GRANTED TO THE AUSTRALIAN AGRICULTURAL COMPANY :—		
Petition from residents of Liverpool Plains and Northern Districts in favour of the Report of Select Committee, presented, 7		1337
Do. do. do. 9		1337
Do. from Jesse Gregson, praying for leave to be heard by Counsel at Bar of the House in opposition to the Report of Select Committee, presented, 17 ; Motion made (*Mr. Burns*) that prayer of Petition be granted, 31 ; and Charles James Manning, Esquire, Counsel learned in the law, addressed the House, 55		1339
Motion made (*Mr. Joseph P. Abbott*) for adoption of Report of Select Committee, and Debate adjourned, 55 ; order of the day postponed, 98, 132, 169, 199.		
Correspondence between Jesse Gregson and Sir John Robertson, laid on Table, 131	2	1345
LAND RESUMED FOR, AT CONCORD :—		
Notification of, laid on Table, 18		1371
TRUST ACCOUNTS :—		
For the half-years ended 30th June and 31st December, 1881, laid on Table, 63		1347
IN THE COUNTY OF GORDON :—		
Motion made (*Dr. Ross*) for copies of correspondence, petitions, &c., having reference to the various roads now in dispute, 81 ; Return to Order, laid on Table, 164		1367
THROUGH MR. COLLINS'S LAND AND THROUGH THE SEGENHOE ESTATE :—		
Motion made (*Mr. McElhone*)) for copies of correspondence, &c., respecting, and copy of plan, 87 ; Return (*in part*) to Order, laid on Table, 164		1353
ROBERTSON, SIR JOHN, K.C.M.G. :—		
Return of, as Member for Mudgee, in room of Samuel Henry Terry, Esquire, 1 ; sworn, 2.		
ROGERS, THOMAS JAMES, CONDITIONAL PURCHASE OF (See "CROWN LANDS.")		
ROTTON'S ESTATE BILL :—		
Petition presented (*Mr. Combes*) for leave to bring in, 145 ; leave given, read 1°, 150 ; referred to Select Committee, 155 ; Report brought up, 181	4	1503
ROYAL COMMISSION (See "COMMISSION.")		
RULINGS OF SPEAKER (See "SPEAKER.")		
RUNS, APPRAISEMENT OF, IN THE NEW ENGLAND AND CLARENCE AND MACLEAY DISTRICTS :—		
Return to Order (*Session* 1881), laid on Table, 19	2	617
RYLSTONE (See "RAILWAYS.")		
RYRIE, MR. ALEXANDER :—		
LAND ACQUIRED BY, AT MICHELAGO :—		
Motion made (*Mr. Levin*), for return showing position and area of, and debate adjourned, 185 ; debate resumed and motion negatived, 199.		
CONDITIONAL PURCHASES HELD BY THE MESSRS. RYRIE :—		
Motion made (*Mr. McElhone*), for return showing number of, and withdrawn, 190.		

REFERENCES TO THE VOTES AND PROCEEDINGS, VOL. I—SESSION 1882.	PAPERS. VOL.	PAGE.
S		
SALE AND SUPPLY OF GAS BILL (See also "GAS"):—		
Message from Governor, 165; Motion made (*Sir Henry Parkes*) for Committee of the whole, 169; House in Committee and resolution agreed to, 182	4	1491
SALE OF LANDS BY AUCTION (See "CROWN LANDS.")		
"SAMUEL PLIMSOLL" (See "IMMIGRATION.")		
SAUNDERS, MR. OLIVER:—		
Motion made (*Mr. Joseph P. Abbott*) for copies of complaints made in reference to the conduct of, a Justice of the Peace at Cassilis, 72; Return to Address, laid on Table, 131	2	77
SAVINGS BANK, GOVERNMENT:—		
Statement of Accounts from 1st January to 31st December, 1881, laid on Table, 18	4	593
SAVINGS BANK BILL (See "GENERAL SAVINGS BANK BILL.")		
SAVINGS BANK, NEW SOUTH WALES:—		
Return respecting Trustees, laid on Table, 159	4	595
SCHEDULE TO THE ESTIMATES IN CHIEF FOR 1883:—		
Laid on Table, 182	4	207
SCHOOLS (See "EDUCATION.")		
SCOTT, CARL (See "MINING.")		
SCOTT, MRS. MARIA ANNIE:—		
Petition from respecting the claim of her late husband, the introducer of the sugar industry, presented, 101	4	1595
SEAMEN, DESERTERS:—		
Despatch laid on Table, 18	4	1543
SEDUCTION LAW AMENDMENT BILL (See "LAW OF SEDUCTION AMENDMENT BILL.")		
SEEDS AND PLANTS DISTRIBUTED AND RECEIVED:—		
Return to Order (*Session* 1881), laid on Table 17.	4	1423
SEGENHOE ESTATE (See "ROADS.")		
SELECT COMMITTEES (See also "REPORTS"):—		
BALLOTING FOR:—		
Sessional Order passed, 20.		
VOTE OF CHAIRMAN:—		
Sessional Order passed, 20.		
STANDING AND SELECT:—		
Appointed during the Session	1	275
SEMPILL, MR. R. H.:—		
Motion made (*Mr. Pilcher*) for copy of report to the Government with reference to state of Trust accounts under administration of, 198.		
SESSIONAL ORDERS:—		
Passed, 19, 20, 21.		
SEWERAGE:—		
WORKS, SYDNEY:—		
Notification of land resumed for, laid on Table, 18	4	1397
BRANCH:—		
Motion made (*Mr. Poole*) for copies of correspondence respecting the dismissal of Mr. H. Czerwonka from, 101; return to order laid on Table, 192	2	153
SHEEP ACTS AMENDMENT BILL (See "DISEASES IN SHEEP ACTS AMENDMENT BILL.")		
SIMSON, MR. COLIN (See "CROWN LANDS.")		
SINGLETON SHOW:—		
Return showing number of Railway tickets issued for, in August, 1882, and the amount received for the same, laid on Table, 96	4	1331
SLEEPING CARS (See "RAILWAYS.")		
SMALL POX (See "QUARANTINE.")		
SMITH, SYDNEY, ESQUIRE:—		
Return of, as a Member for East Macquarie, in room of Alfred John Pechey, Esquire, deceased, 1; sworn, 2.		
"SMYRNA" (See "IMMIGRATION.")		
SPEAKER:—		
Informs House of issue and return of Writs, 1.		
Lays minute authorizing application of balance, on Table, 2, 192	4	589, 591
Lays Abstracts of Public Accounts for 1881, on Table, 2	4	439
Reads Governor's Opening Speech, 2.		
Lays on Table Warrant appointing Committee of Elections and Qualifications, 7; withdrawn, 9; lays on Table warrant in substitution, 11; reports maturity of warrant, 31.		
Reports Governor's reply to Address in reply to Governor's Opening Speech, 13.		
Appoints first meeting of the Elections and Qualifications Committee, 50.		
Reports Governor's reply to joint Address to the Queen on the success of the British Arms in Egypt, 79.		
Gives Casting Vote, 124.		
RULINGS OF:—		
Criminal Law Amendment Bill: That it was in order to propose an amendment to words proposed to be inserted before taking a division, 96.		
Prickly Pear Destruction Bill.: That the Bill was not regularly before the House, not having received the recommendation of the Crown, 98.		
National Gallery of Art—Free Public Library: As to Resolutions involving a charge on the Public Revenue, and being properly before the House, 110.		
Institute of Surveyors Incorporation Bill: That the Bill contained provisions not authorized by the order of leave, and was therefore not properly before the House, 114.		
Management of the Circular Quay: That a Motion was not in order if it referred in direct terms to a speech delivered during a previous Debate of the present Session, and in its discussion necessitated a reference to such Debate, 199.		
SPECIAL ADJOURNMENT:—		
31, 82, 133, 171, 192.		
SPEECH, OPENING (See "GOVERNOR"; also "ADDRESS IN REPLY.")		
SPIRITS, WINES, AND BEERS (See "WINES, BEERS, AND SPIRITS.")		
STANDING ORDERS COMMITTEE:—		
Sessional Order passed, 21.		
STATE CHILDRENS RELIEF DEPARTMENT:—		
Report, laid on Table, 63	2	1103

REFERENCES TO THE VOTES AND PROCEEDINGS, VOL. I—SESSION 1882.	PAPERS. VOL.	PAGE.
S		
STATISTICAL REGISTER FOR 1881:—		
Part III, Trade and Commerce, laid on Table, 77	3	301
Parts 1, 2, 4, 5, 6, 7 laid on Table, 139	3	301
STEVENS, GEORGE RICHARD (See "OCEAN.")		
STOCK:—		
Proclamation prohibiting introduction of, laid on Table, 19	2	1397
Report of Stock and Brands Branch of Department of Mines, for 1881, laid on Table, 19	2	1373
THE CHIEF INSPECTOR OF:—		
Motion made (*Mr. Farnell*) for copies of correspondence, &c., relative to any complaints by the Chairman of the Board of Sheep Directors of the Young District against, 155.		
STOCK PROTECTION BILL (See "PASTURES AND STOCK PROTECTION BILL.")		
STREETS AT WAVERLEY, ALIGNMENT OF:—		
Return to Order (Session, 1881) laid on Table, and not ordered to be printed, 19.		
SUBDIVISION OF LAND REGISTRATION BILL:—		
Motion made (*Mr. Murray*) for leave to bring in, 9.		
SUMMARY CONVICTIONS BILL (See "EVIDENCE IN SUMMARY CONVICTIONS BILL.")		
SUPREME COURT PROCEDURE BILL:—		
Motion made (*Mr. Pilcher*) for leave to bring in, 185, read 1°, 185.		
SUPPLEMENTARY ESTIMATES (See "FINANCE.")		
SUPPLY:—		
Sessional Order passed, 20.		
House to resolve itself into Committee, 43.		
House in Committee, 47, 177.		
Resolutions reported, 47, 177.		
Resolutions agreed to, 47, 177.		
Order of the Day postponed, 182.		
SUPPLY AND SALE OF GAS (See "GAS.")		
SURVEYORS INCORPORATION BILL (See "INSTITUTE OF SURVEYORS INCORPORATION BILL.")		
SYDNEY COMMON (See "AGRICULTURAL SOCIETY, SYDNEY.")		
SYDNEY HARBOUR (See "DREDGING OPERATIONS IN SYDNEY HARBOUR.")		
SYDNEY SEWERAGE (See "SEWERAGE.")		
SYDNEY WATER SUPPLY (See "WATER SUPPLY.")		
T		
TAMWORTH GAS AND COKE COMPANY'S BILL:—		
Petition presented (*Mr. Burdekin*) for leave to proceed with Bill of last Session in terms of 65th Standing Order, 17; read 1°, read 2°, 17; considered in Committee, reported with amendments, and report adopted, 31; read 3°, and sent to Council, 38; returned with amendments, 91; amendments agreed to, with an amendment and Message to Council, 98; message from Council agreeing to the Assembly's amendment upon the Council's amendments, 106; assent reported, 131.		
TEA AND WHEAT, DUTY ON—		
Motion made (*Mr. Heydon*) in favour of taking the duty off tea and putting a duty on wheat, and negatived, 101.		
TELEGRAPHS:—		
Regulations regarding Press messages, and reduction of charges, laid on Table, 43	4	1087
TEMORA, ALLOTMENT IN HOSKINS-STREET:—		
Motion made (*Mr. Levien*) for copies of all papers and evidence in the cases O'Malley v. Hill, and O'Malley v. Able and Hills, 155.		
TENTERFIELD (See "ELECTORAL.")		
THORNTON, MR. (See "EDUCATION.")		
TITLES CONFERRED ON COLONISTS:—		
Motion made (*Mr. Buchanan*) in favour of discontinuance of conferring Titles on colonists by the British Government, 73; previous question moved and resolved in the affirmative, 73; motion negatived, 73.		
TONNAGE AND WHARFAGE DUES AT THE CIRCULAR QUAY:—		
Return showing amounts received for, from 1877 to 1882, laid on Table, 55	4	1407
TONNAGE MEASUREMENT:—		
Despatch, laid on Table, 18	4	1405
TONNAGE RATES ACT AMENDMENT BILL (See "WHARFAGE AND TONNAGE RATES ACT AMENDMENT BILL.")		
TRACINGS:—		
Relating to unarmoured gunboats, cruisers, and guns, laid on Table as exhibits, 139	4	1
TRADES, NOXIOUS (See "NOXIOUS TRADES.")		
TRAMWAYS:—		
NEWTOWN TO COOK'S RIVER:—		
Petition from St. Peters and Cook's River in favour of, presented and read by Clerk, 113	4	1361
BONDI:—		
Petition from Bondi and Sydney in favour of, presented, 164	4	1363
REPORT FOR 1881:—		
Laid on Table, 181	4	1095
TRUST MONEYS DEPOSIT ACCOUNTS:—		
From 1st April, 1881, to 31st March, 1882, laid on Table, 18	4	597
TUMUT (See "ELECTORAL.")		
TURNER, J. M. W., R.A.:—		
Correspondence respecting presentation of his "London—Autumnal Morning," to the Government, by T. Woolner, Esquire, laid on Table, 131	2	927

REFERENCES TO THE VOTES AND PROCEEDINGS, VOL. 1—SESSION 1882.	PAPERS. VOL.	PAGE.
U		
UNARMOURED GUNBOATS, CRUISERS, AND GUNS:—		
Papers relating to, with tracings and photographs, laid on Table, 139	4	1
UNITED STATES OF AMERICA:—		
Convention between New South Wales and, on the exchange of Money Orders, laid on Table, 18	4	1089
UNIVERSITY OF SYDNEY:—		
Report for 1881, laid on Table, 19	2	801
By-laws, laid on Table, 19, 86	2	829, 841
USHER OF BLACK ROD:—		
Delivers Message from Governor, 2.		
V		
VACANT SEATS (See "ELECTORAL.")		
VACCINATION:—		
Report for 1881, laid on Table, 98	2	1145
VEGETABLE CREEK (See "MINING.")		
"VERNON":—		
Report for year ended 30th June, 1882, laid on Table, 202	2	1149
VIOLATION OF CHILDREN BILL:—		
Motion made (*Mr. Buchanan*) for leave to bring in, 25; read 1°, 26; motion made for 2°, and debate adjourned, 31; Order of the Day postponed, 51, 87, 132; Order of the Day discharged and Bill withdrawn, 151.		
VITAL STATISTICS:—		
Twenty-sixth Annual Report, laid on Table, 98	3	663
VOLUNTEER FORCE REGULATION ACT:—		
Statement of moneys expended under, during 1881, laid on Table, 17	4	45
VOLUNTEERS:—		
CAPTAIN P. B. WALKER, TORPEDO AND SIGNALLING CORPS:—		
Return to Address (*Session* 1881), laid on Table, 43	4	25
NAVAL BRIGADE:—		
Regulations laid on Table, 46	4	47
VOLUNTEER AND PERMANENT ARTILLERY FORCES:—		
Motion made (*Mr. Copeland*) respecting appointments and promotions in and the absence on leave of Colonels Richardson and Roberts, 113.		
W		
WALKER, CAPTAIN P. B., TORPEDO AND SIGNALLING CORPS:—		
Return to Address (*Session* 1881), laid on Table, 43	4	25
WALLACE, BENJAMIN, CONDITIONAL PURCHASE OF (See "CROWN LANDS.")		
WARIALDA:—		
Motion made (*Mr. W. R. Campbell*) for Return showing business transacted at Land Office, during 1881, and the first eight months of the present year, 7.		
WATER SUPPLY:—		
SYDNEY:—		
Notification of lands resumed for, laid on Table, 18, 150	2	1415, 1423
Information respecting contracts for, laid on Table, 42		1413
Motion made (*Mr. Poole*) for progress report showing particulars of work already done, 182.		
Return respecting lands resumed for, laid on Table, 192		1405
WORKS AT PROSPECT:—		
Motion made (*Mr. Withers*) for statement of quantities and cost of excavations for, &c., at Prospect, 21; Return to Order laid on Table, 42		1427
COOTAMUNDRA:—		
Motion made (*Mr. William Forster*) for correspondence, minutes, &c., having reference to, 38.		
GREENFELL:—		
Report on, laid on Table, 18		1429
BATHURST:—		
Notification of land resumed for, laid on Table, 150		1421
WATERING PLACES AND RESERVES BILL:—		
Motion made (*Dr. Renwick*) for Committee of the Whole, 19; House in Committee, and Resolution agreed to, 26; read 1°, 26; Message from Governor, 41; read 2° and committed, 43; further considered in Committee, 129, reported with amendments, and report adopted, 161; Bill recommitted, 165; reported 2° with further amendments, and report adopted, 166; read 3°, and sent to Council, 170	4	831

REFERENCES TO THE VOTES AND PROCEEDINGS, VOL. 1—SESSION 1882.	PAPERS. VOL.	PAGE.
W		
WAUDBY, CHARLES :—		
Motion made (*Mr. William Forster*) for copies of correspondence, minutes, &c., having reference to the death of the infant child of, and negatived, 118.		
Correspondence laid on table, 139	2	93
WAVERLEY STREETS, ALIGNMENT OF :—		
Return to Order (*Session* 1881) laid on Table, and not ordered to be printed, 19.		
WAYS AND MEANS :—		
Sessional Order passed, 20.		
House to resolve itself into Committee, 43.		
House in Committee, 47, 177.		
Resolutions reported, 47.		
Resolutions agreed to, 47.		
Order of the Day postponed, 182.		
Estimates of, for 1883, laid on Table, 177	4	295
Appendix to, laid on Table, 177	4	443
Explanatory statement of Public Accounts as embodied in, laid on Table, 177	4	433
WENTWORTH (See "ELECTORAL.")		
WESTERN PACIFIC :—		
Despatch on Labour Trade in the, laid on Table, 17	4	1547
Do. Outrages do. 63	4	1583
WEST MAITLAND :—		
Letter to Colonial Secretary from merchants, storekeepers, and others, respecting public holidays laid on Table, 43	4	1541
WESTON, WILLIAM J. (See "MINING.")		
WHARFAGE AND TONNAGE RATES ACT AMENDMENT BILL :—		
Motion made (*Mr. James Watson*) for Committee of the Whole, 25; House in Committee, and Resolution agreed to, 43; read 1°, 44; Order of the Day postponed, 47; read 2°, committed, and reported without amendment, 161; read 3°, and sent to Council, 166; returned without amendment, 202.		
WHARFAGE AND TONNAGE DUES AT THE CIRCULAR QUAY :—		
Return showing amounts received for, from 1877 to 1882, laid on Table, 55	4	1407
WHEAT AND TEA, DUTY ON :—		
Motion made (*Mr. Heydon*) in favour of taking the duty off tea and putting a duty on wheat, and negatived, 101.		
WHITE, MESSRS., MINERAL CONDITIONAL PURCHASES MADE BY :—		
Motion made (*Mr. McElhone*) for copy of correspondence, minutes, &c., and copies of plans with reference to, at Liverpool Plains and the Upper Hunter Electorate, 90.		
WILSON, MR. SAMUEL, CONDITIONAL PURCHASE OF, AT YASS :—		
Return to Order (*Session* 1881), laid on Table, 19	2	325
WINDEYER, HIS HONOR MR. JUSTICE :—		
Report of, on the case of Regina *v.* Plomer—Rape—laid on Table, and not ordered to be printed, 71.		
WINE DUTIES :—		
Correspondence, laid on Table, 18	2	627
WINES, BEERS, AND SPIRITS, ALLEGED ADULTERATION OF :—		
Correspondence respecting, laid on Table, 71	2	1327
"WOLVERENE," H.M.C.S. :—		
Statement respecting transfer and maintenance of, laid on Table, 37	4	13
Correspondence respecting the presentation of, to the Colony, laid on Table, 46	4	15
Regulations laid on Table, 46	4	11
WOOLNER, T., ESQUIRE :—		
Correspondence respecting presentation by, to the Government, of Turner's "London—Autumna' Morning," laid on Table, 131	2	927
WORKS OF ART (See "ART GALLERY.")		
WRIGHT, FRANCIS AUGUSTUS, ESQUIRE :—		
Return of, as a Member for Redfern in room of John Sutherland, Esq., 1; sworn, 2.		
WRITS OF ELECTION (See also "ELECTORAL") :—		
Yass Plains, 1.		
Northumberland, 1.		
Redfern, 1.		
Mudgee, 1.		
Wentworth, 1.		
Tenterfield, 1.		
East Macquarie, 1.		
Tumut, 153.		
Y		
YASS PLAINS (See "ELECTORAL.")		
YOUNG, MR. LAMONT :—		
Motion made (*Mr. William Forster*) for copies of correspondence, &c., having reference to mysterious loss or disappearance of, at Bermagui, 87.		

1882.

LEGISLATIVE ASSEMBLY.

NEW SOUTH WALES.

LETTERS OF REGISTRATION OF INVENTIONS

UNDER

16 VICTORIA, No. 24;

FOR

1879.

Printed in accordance with Resolution of Legislative Assembly.

SYDNEY: THOMAS RICHARDS, GOVERNMENT PRINTER.

1882.

[5*s.*] 198—*a*

1882.

LEGISLATIVE ASSEMBLY.

NEW SOUTH WALES.

LETTERS OF REGISTRATION OF INVENTIONS.

(DESCRIPTIONS, SPECIFICATIONS, &c., ACCOMPANYING APPLICATIONS FOR.)

Printed in accordance with Resolution of Legislative Assembly.

RETURN (in part) to an *Address* of the Honorable the Legislative Assembly of New South Wales, dated 10 May, 1861, A.M., praying that His Excellency the Administrator of the Government would be pleased to cause to be laid upon the Table of this House (in addition to the Return already upon the Table),—

"(1.) A copy of the Descriptions and Specifications accompanying any "applications for Letters of Registration of Inventions under the Act of "Council 16 Victoria, No. 24, together with the date of application for such "Letters of Registration, and when granted; also, copies of the Plans or "Sections annexed, and of the Report, in each case.

"(2.) That His Excellency will cause similar Returns to be laid before "Parliament annually."

(*Mr. Hart.*)

INDEX.

No.	Name of Applicant.	Date of Application.	Nature of Invention.	When granted.	Page.
				1879.	
716	William Croasdill	18 Oct., 1878	An improved method for the treatment of pyrites and other refractory ores containing gold, silver, and other precious metals.	20 January ...	1
717	Robert Joseph Harvey ...	26 Nov., 1878	Improvements in machinery for pressing plate metal into various forms.	20 January ...	5
718	Joseph William Sutton...	19 Dec., 1878	An invention for the rapid evaporation of liquids, especially saccharine liquids or juices.	30 January ...	9
719	Pierre Puech	10 Dec., 1878	An improved process for thoroughly washing, scouring, and bleaching the wool upon sheep and other such skins, in order to obtain flocky, Roubaisienne half-combed, and fleecy wool.	30 January ...	11
721	The Société Générale d'Electricité, procédés Jablochkoff, assignees of Paul Jablochkoff.	6 Jan., 1879	Improvements in electric lamps, and in arrangements connected therewith for dividing and distributing the electric light.	20 February...	15
722	Daniel Williams	7 Jan., 1879	Apparatus for preserving meat and other perishable substances.	20 February...	19
723	Kennard Knott	6 Jan., 1879	Improvements in dry air refrigerating and in apparatus therefor, applicable to railway carriages and ships' storerooms, and other stationary refrigerators for the transportation and preservation of meat and other perishable articles.	20 February...	21
724	James Crutchett.....	6 Jan., 1879	For the manufacture of atomic steam coal gas...	20 February...	25
725	Samuel Thompson and Thomas Wilson Garlick.	14 Jan., 1879	Non-actinic process of writing and printing.....	20 February...	29
726	William Menzies and Charles Blagburn.	31 Jan., 1879	Improvements in steam boilers	13 March	31
730	John Absalom Absalom..	10 Oct., 1878	A method of instantly testing the perfect soldering of any article requiring to be hermetically sealed or otherwise.	21 April	33
731	William Lockhart Morton	26 Feb., 1879	A self-acting gate which can be opened and shut without dismounting or alighting.	21 April	35
732	George Phillipson, junr...	11 Mar., 1879	Improvements in harvesting machines	21 April	37
736	John Starkey, assignee of William Warren Bird.	22 June, 1877	An improved method of stoppering bottles containing aerated waters.	9 May.....	41
737	Joseph Breeden	24 April, 1879	Improvements in holders or galleries for globes and shades for gas and other lights.	28 May.....	45
739	Violet Louis and Ophelia Gee.	12 May, 1879	A new and useful composition for the prevention of incrustation in boilers used in connection with steam-engines and otherwise.	11 June.....	49
740	Alexander Richard Mackenzie.	4 April, 1879	An invention called "Mackenzie's Ejector Vacuum Pan."	2 July.....	51
741	Frederick William Elliott	9 May, 1879	A method of consolidating camphor by pressure	2 July.....	55
742	Samuel Aldred and — Spielman.	8 April, 1879	Improvements in rails and chairs for tramways, and in the method of laying them.	2 July.....	57
743	Samuel M'Caughey	28 May, 1879	Improvements in the construction of excavating machines.	2 July.....	59
744	Walter Holland, Samuel Telford Dutton, and Thomas Clunes.	15 May, 1879	Improvements in machinery or apparatus for working or interlocking points and signals on railways.	2 July.....	61
745	Charles Hugh Leycester..	4 June, 1879	Improvements in hammock and shelter tents ...	8 July.....	65
746	Alexander Richard Mackenzie.	3 June, 1879	An invention called "Mackenzie's Vacuum Curing-box."	9 July.....	69
747	Frederick Mann	11 June, 1879	Improvements in the process of manufacturing nicro-glycerine, an improved apparatus, employed therein, and an improvement in the manufacture of nitro-glycerine compounds.	17 July.....	73

No.	Name of Applicant.	Date of Application.	Nature of Invention.	When granted.	Page.
				1879.	
748	Alfred Felton and Frederick Sheppard Grimwade, assignees of Lambton Le Breton Mount.	26 May, 1879	Improvements in the stoppering of aerated water bottles.	17 July	77
749	Thomas Ellis	18 June, 1879	Improvements in the manufacture of wire fencing, and in the wire used therefor.	22 July.....	79
750	Ernest Boisson and Henry Coutonly.	28 May, 1879	An improved composition for preventing and removing incrustation in steam boilers.	22 July.....	81
751	William Dent Priestman and Samuel Priestman.	16 June, 1879	Improvements in and appertaining to self-acting grapple buckets, forks, &c.	22 July.....	83
752	Archibald Liversidge.....	28 June, 1879	An improved process for the packing and preservation of meat and other animal food in vegetable parchment or in insoluble gelatine.	28 July	87
753	James Hornsby and William Hornsby, assignees of George Agars Walker	10 Dec., 1878	Improvements in machinery for cutting thorn and other hedges.	4 August ...	89
754	The Ewart Manufacturing Company.	16 June, 1879	Improvements in drive-chains.....	4 August ...	95
759	Edward Scott Naylor.....	14 July, 1879	A new and original process for the preservation of meat in a partially cooked or cooked state by means of a preparation of stearine or fat from which the oleine has been extracted, the meat so cooked or partially cooked being packed in casks or cases, and entirely surrounded by this preparation being poured over it in a liquid state, so as entirely to exclude the air.	12 September	99
760	Harry Oscar Choles	16 July, 1879	Improvements in stocks and dies for screw-threading pipes and other articles.	12 September	101
761	John Henry Pepper	7 Aug., 1879	Improvements in apparatus for producing optical illusions.	12 September	105
762	William L. Horne	26 July, 1879	An invention for governing or regulating the pressure of fluids.	12 September	107
765	James Henry Channing Martin.	23 Aug., 1879	Improvements in means or apparatus employed in husking and otherwise decorticating and polishing rice and other kinds of grain and seeds.	29 September	109
766	Margarethe Meinert and Conrad Warnecke, assignees.	16 Aug., 1879	Improvements in the preparation of preserved meat or compounds of the same with other substances.	29 September	113
767	William Aikin and William Whyte Drummond.	16 Aug., 1879	An improved method of moulding in sand, and machinery therefor.	29 September	117
768	George Westinghouse, jun.	12 July, 1879	An improved system of apparatus for regulating and increasing the efficiency of brakes for railway trains, and for controlling and indicating the speed of locomotive wheels.	29 September	121
769	William Thomas Angus...	1 Sept., 1879	Improvements in the construction of a certain vehicle known as the "tray" or "Abbott" buggy, and designated the "Angus" buggy.	29 September	129
770	Richard Schiering	30 July, 1879	An apparatus for the extermination of flies	3 October ...	131
771	Henry Bell, James Bell, and Joseph James Coleman.	15 Sept., 1879	Improvements in processes and apparatus or arrangements for cooling and regulating the temperature and dryness of air in holds, saloons, and cabins of ships, and in railway vehicles, hotels, theatres, halls, factories, hospitals, slaughter-houses, and other interiors.	17 October ...	133
772	George John Hoskins and Patrick Ryan Larkin.	12 Sept., 1879	A self-acting hydraulic wool or chaff press	17 October ...	139
773	William Thomas Crockford and Richard Cashin.	23 Aug., 1879	An apparatus for producing illuminating gas by the mixture of atmospheric air with the vapour of liquid hydro-carbons.	17 October ...	141
774	George Harrisson	19 Sept., 1879	Apparatus for scraping and cleaning and operating on hides, skins, or leather, by means of revolving cutters or scrapers.	30 October ...	145
775	Robert Wilcox.....	6 Sept., 1879	Improvements in steam-vessels	3 November	149
776	George Bowman Mackenzie....	6 Oct., 1879	A differential compound engine	3 November	153

No.	Name of Applicant.	Date of Application.	Nature of Invention.	When granted.	Page.
				1879.	
777	Ezra Hinckley and James Knox Newton, assignee of one-half interest.	13 Sept., 1879	Combination and fastening clips for a spiral spring steel wire copper-covered bed.	6 November	157
778	Edmund Schmeja	12 Sept., 1879	Improvements in apparatus for grinding grain, pulse, bones, cement, and other substances.	13 November	159
779	Robert Tooth	7 Oct., 1879	Improvements in treating the juice of the sugar-cane, and in manufacturing sugar therefrom.	13 November	163
780	John Walls	30 Sept., 1879	Improvements in clothes-washing machines	17 November	169
781	William Humble and Ward Nicholson, assignees of James Ferrier, junr.	9 Oct., 1879	Improvements in machinery for straining and retaining the strain on wire between two fixed points, such as in wire fencing.	17 November	171
782	Robert Tooth	7 Oct., 1879	Improvements in the mode of and apparatus for manufacturing sugar.	17 November	173
783	William Humble and Ward Nicholson.	20 Oct., 1879	An improved contrivance to be used in washing clothes.	25 November	179
785	William James Grant and Frederick William Elliott	1 Oct., 1879	An improvement in stoppering aerated water bottles, and a machine for filling the same, to be called "Grant's Aerial Stopper, Bottle, and Filling Machine."	8 December	181
786	Alfred Felton and Frederick Sheppard Grimwade, assignees of William Boyd.	29 Oct., 1879	Improvements in and relating to aerated water bottles.	11 December	185
787	August Louis Schultz.....	8 Nov., 1879	Improvements in the method of and apparatus for the combustion of fuel.	18 December	187
788	James Livesey, Joshua Kidd, and James Kidd.	28 Nov., 1879	Improvements in material and apparatus for the enrichment of inflammable gas.	31 December	191

A.D. 1879, 20*th January*. No. 716.

IMPROVED METHOD FOR THE TREATMENT OF PYRITES AND OTHER REFRACTORY ORES.

LETTERS OF REGISTRATION to William Croasdill, for an Improved Method for the treatment of Pyrites and other refractory Ores containing gold, silver, and other precious metals.

[Registered on the 21st day of January, 1879, in pursuance of the Act 16 Vic. No. 24.]

BY His Excellency Sir Hercules George Robert Robinson, Knight Grand Cross of the Most Distinguished Order of Saint Michael and Saint George, Governor and Commander-in-Chief of the Colony of New South Wales and its Dependencies, and Vice-Admiral of the same.

TO ALL TO WHOM THESE PRESENTS SHALL COME, greeting:

WHEREAS William Croasdill, of the Australian Club, Sydney, in the Colony of New South Wales, Barrister-at-law hath by his Petition humbly represented to me that he is the author or designer of a certain invention or improvement in manufactures, that is to say, of an invention of "An Improved Method for the treatment of Pyrites and other refractory Ores containing gold, silver, and other precious metals," which is more particularly described in the specification as amended by alterations and interlineations in the third, fifth, sixth, tenth, and eleventh pages thereof, and the sheet of drawings which are hereunto annexed; and that he, the said Petitioner, hath deposited with the Honorable the Treasurer of the said Colony of New South Wales the sum of Twenty Pounds sterling, for defraying the expense of granting these Letters of Registration, as required by the Act of Council, sixteenth Victoria, number twenty-four; and hath humbly prayed that I would be pleased to grant Letters of Registration, whereby the exclusive enjoyment and advantage of the said invention or improvement might be secured to him for a period of fourteen years: And I, being willing to give encouragement to all inventions and improvements in the arts or manufactures which may be for the public good, and having received a report favourable to the prayer of the said Petition, from competent persons appointed by me to examine and consider the matters stated therein and to report thereon for my information, am pleased, with the advice of the Executive Council, and in exercise of the power and authority given to me by the said Act of Council, to grant, and do by these Letters of Registration grant unto the said William Croasdill, his executors, administrators, and assigns, the exclusive enjoyment and advantage of the said invention or improvement, for and during the term of fourteen years from the date hereof; to have, hold, and exercise unto the said William Croasdill, his executors, administrators, and assigns, the exclusive enjoyment and advantage thereof, for and during and unto the full end and term of fourteen years from the date of these presents next and immediately ensuing, and fully to be complete and ended: Provided always, that if the said William Croasdill shall not, within three days after the granting of these Letters of Registration, register the same in the proper office in the Supreme Court, at Sydney, in the said Colony of New South Wales, then these Letters of Registration, and all advantages whatsoever hereby granted, shall cease and become void.

In witness whereof, I have hereunto set my sign manual, and have caused the present Letters of Registration to be sealed with the seal of the said Colony of New South Wales, at Government House, Sydney, in New South Wales, this twentieth day of January, in the year of our Lord one thousand eight hundred and seventy-nine.

[L.S.] HERCULES ROBINSON.

Improved Method for the treatment of Pyrites, &c.

SPECIFICATION.

I, WILLIAM CROASDILL, of the Australian Club, Sydney, Barrister-at-law, being the author or designer of a certain invention or improvement in the arts and manufactures, that is to say, an invention of an Improved Method for the treatment of Pyrites and other refractory Ores containing gold, silver, and other precious metals, do hereby declare and specify the particulars thereof to be as follows, referring to the plan or drawing annexed.

THE method of procedure may be thus described :—

The ore is in the first place crushed as fine as possible. If the ore be not rich, and preferably in all cases, it is concentrated by any of the ordinary concentrating machines or otherwise. When thus concentrated the ore is if necessary roasted by ignition in air, so as to oxidize as far as is possible all the oxidizable matter contained, and to expel the sulphur, arsenic, and antimony, if present.

When thus concentrated and roasted the ore is ready for treatment.

In order that the treatment may be the more easily understood, I will in the description which follows describe the plant and refer to the plan presented with this specification. I will further consider that the quantity to be treated is two tons, so that it may serve as a key to the size and so forth of the plant.

The tank No. 1, which I name the reservoir, is constructed of slate or silicious stone, jointed with some material unaffected by the acids used, preferably india-rubber, and of the dimensions 5′ × 7′ × 4′. It is gauged in order to allow of regulated and known quantities being drawn off.

The reservoir is connected by pipes with tank No. 2, called the chlorodiser, which latter is below the level of the reservoir.

The chlorodiser is also constructed of slate or silicious stone, and of the dimensions 5′ × 7′ × 4′. The joints of this tank are sunk into each other, bedded on (say) india-rubber, and bolted and so fixed as to expose as little as possible of the india-rubber. It is for convenience very slightly tilted towards one end, so that the contents may flow out easily. In this end a hole, A, 6″ diameter is made and may be closed by a slate plate faced with india-rubber flange, and held in position by bolts, clamps, or other convenient means, about two feet from the bottom; there are one at each end—two other openings, B B, of a similar kind, accurately fitted with plugs, and used for the purpose of stirring up the contents if necessary. Fitted into the cover and luted with Paris plaster is a conduit pipe, D, 6″ diameter, leading into the "recovery chamber" hereinafter described. C C are two holes cut in the top and fitted with plate glass, about 4″ diameter (sight holes), for the purpose of allowing the interior of the tank to be viewed. In some convenient part is fitted a steam pipe, preferably made of iron, and cased with a glazed earthenware pipe wherever exposed to the acids or their vapours, so arranged as that the iron pipe is shorter than the earthenware pipe, so that the iron is protected from the acid.

This pipe dips down into the contents of the chlorodiser.

The tank is also fitted with a hopper, E, made of slate or wood and luted with Paris plaster (sulphate of lime), and arranged as shown on plan, with a slide so as to regulate if necessary the admission of ore.

The outside of the chlorodiser is packed so as to prevent radiation of heat.

The chlorodiser is connected with tank No. 3 from underneath the sluice A of the chlorodiser, by means of a trough down which the contents when required flow into tank No. 3 (the settling tank). This tank may be constructed of wood, with dimensions 6′ deep × 7′ × 5′. It is fitted down each end side with taps for drawing off the clear fluid into the gold tank when the mass settles down, and level with the bottom at each end is arranged a sand filter fitted with taps so that the last drain may be drawn off as shown in plan.

The taps fitted to the settling tank flow on one side into the gold precipitating tank, and on the other into the silver precipitating tank as may be required. The dimensions of these precipitating tanks, which should be of slate and polished smooth on the inside, may be as follows :—The gold tank, 2 feet wide at the top, 4 feet at the bottom, and 12 feet high at the deepest end; the silver tank, 2 feet at top, 4 feet at bottom, and 6 feet high. The bottoms are made to slope to one corner, as shown on plan; they are each fitted with taps as shown, for the purpose of drawing off samples for testing and for emptying. In the deep corner of each is fitted a plug for washing out the precipitated gold and silver respectively after the clear fluid from which the gold and silver have been precipitated has been drawn off. This plug-hole should be so arranged as that the last trace may be washed out. The top of the gold tank is closed with a luted cover, and there is fitted into this cover or top, a pipe fitted with a tap or other convenient shut off at each end and leading into the recovery chamber. Where there is copper in the ore the clear fluid, after the precipitation of the gold, is allowed to flow from the gold tank into a tank or trough containing scrap iron collected as usual. This trough may be constructed of wood. The above will give a fair idea of the construction of the plant for the treatment by this process of refractory ores.

Having now described the plant and machinery to be used, I will by way of illustration take an ordinary pyrite.

The ore (2 tons) crushed, roasted, and after concentration as above described, is introduced into the chlorodiser, and there mixed with a sufficient quantity of dilute nitric acid to make a loose mud. The quantity of nitric acid to be used will have to be regulated by the quantity of oxidizable matter in the chlorodiser; for greater certainty, an excess of 10 per cent. or 15 per cent. should be used; care being taken in all cases not to have the acid too dilute—say not under 10 per cent.

A small experiment in the laboratory will easily determine the necessary quantity of nitric acid to be used in each particular class of ore.

The quantity being thus ascertained, the necessary quantity (regard being had to the specific gravity) is allowed to flow from the reservoir into the chlorodiser. A sufficient quantity of water is added (if necessary) to make a loose mud and so obtain a necessary fluidity of the mass, and to facilitate the agitation, &c. If the quantity of water to be added reduces the strength of the solution too low, then more acid should be added; the excess being driven off during subsequent operations. If lead, copper, magnesia, or any alkaline earths, or any metals that combine with the acid except gold or silver be present, a sufficient quantity

quantity of sulphuric acid to combine with these elements should be added to the mixture in the chlorodiser, in order to prevent combination with and consequent waste of nitric acid. The contents of the chlorodiser are then raised to the boiling point by the injection of steam through the steam pipe, and the temperature kept up during the entire operation. The mass is occasionally agitated by means of rakes, which may be of wood, the raking to be done as quickly as possible.

If necessary, during the raking, the connection between the chlorodiser and the recovery chambers may be closed, in order to prevent any escape of the acid vapours. After boiling for an hour or so, about 14 pounds of hydrochloric acid to every ounce of gold and silver is introduced into the chlorodiser. The quantity of hydrochloric acid will vary with each class of ore, but when the acid is (as is often the case) of very small value, the above amount which is in excess may be used advantageously, as it quickens the operation. The boiling is continued for from four to eight hours; the time will be regulated by the tests made for gold. For this purpose a sample of the treated ore from the chlorodiser is taken out and thoroughly washed with water, it is then boiled up with about its own weight of aqua regia in a test tube (1 vol. HNO, 3 × 3 vol. H. Cl) for about fifteen minutes. The solution is diluted and filtered into another test tube; it is there neutralized when quite cold with pure carbonate of soda, an excess of the latter being added and the mixture well and thoroughly shaken till no more gas escapes. It is then filtered off and the clear solution which will contain the gold (if any be left in), is made acid with pure hydrochloric acid, and a few drops of a mixture of equal vols. of solution of stannous and stannic chlorides is added. If any gold be present, it will be indicated by a purple or brownish colouration of the solution. If the solution after the addition of the tin solution is heated the test is still more delicate. If no colour is produced, then the conversion and extraction in the chlorodiser will be quite complete, and the whole of the gold will be in solution. When the operation is completed in the chlorodiser the mass is allowed to run down into tank No. 3, the settling tank. Here it is allowed to settle down till the solution becomes perfectly clear. This solution containing all the gold as chloride is then tapped into the gold precipitating tank No. 4, clean water is then added to the settling tank, so as to wash the magma, and from this again, when settled down as before, the solution is tapped into the gold precipitating tank; the last drains are drawn off through the said filter, as shown in plan.

When the solution and washing have thus been emptied into the gold precipitating tank, the contents are heated by a steam jet, a sufficient quantity of sulphurous acid is then added to reduce any nitric acid remaining in the solution, and to precipitate the gold; when the sulphurous acid is distinctly present (to the smell) sufficient has been added. The nitric acid being reduced, the peroxide and other oxides of nitrogen pass into the recovery chambers, to be reoxidised into nitric acid and recovered. The gold is precipitated, and after some hours falls to the bottom of the tank. To ascertain if all the gold has fallen down, samples of the solution may be drawn off, and the sample treated with aqua regia, and then subjected to the tin test.

When the gold is all precipitated and settled down, then the solution is drawn off gently and allowed to flow away, or if copper be present passed over iron scrap (in the usual way) in the copper tank; when the solution has all been drawn off to within a few gallons the remainder is collected in a vessel, care being had to wash out into the vessel the whole of the gold-dust precipitated. It may sometimes be advisable to reduce this with aqua regia filter, and reprecipitate this again in the laboratory, if absolutely pure gold is required.

The gold-dust has then only to be melted into bars.

Returning now to the settling tank, the silver (if any) will be there as an insoluble chloride. This is dissolved out by washing with a hot saturated solution of salt and water. The clear solution is (as described in the case of gold) drawn off into the silver precipitating tank. It may not be worth while to wash the magma a second time if there be only a small quantity of silver.

The silver is precipitated by hanging a bar of zinc in the solution. The silver when precipitated and settled down is collected in the same way as the gold and melted into bars.

The solution of salt is used over again for the next charge in the same manner, being heated most readily by a jet of steam.

The magma is then discharged from the settling tank. By easy regulation two charges of ore may be passing through (at different stages) the same set of apparatus.

In order to economize the nitric acid used in this operation, I allow the fumes of the deoxidized acid to pass from the chlorodiser through the conduit pipe into the recovery chambers, where they are reoxidized and reconverted into nitric acid. These chambers, which are closed, and of a size suitable to the quantity of fumes, should be constructed of slate, glazed earthenware (or other suitable material), and are jointed with (say) sulphate of lime. Each chamber may rest in a tank or stone base with water joint as shown in plan.

In the side of the chamber is luted one (or more) bottomless glass bottles, with ground stopper, by means of which the quantity of fumes may be roughly judged by their colour. If more than one chamber is used, as is advisable in case of overflow, then the chambers may be connected by the following or other suitable arrangement (vide "junction joint," plan). DD is an earthenware drain pipe 12 inches diameter, and (say) 18 or12″ deep; this rests loosely in an earthenware or slate pan, EE. The top of DD is fitted with a well luted (with sulphate of lime). Cover FF of (say) slate. The pipe A, 3″ in diameter, is fitted at one end into the top of the first chamber, while the other end passing through the slate cover FF dips down below the level of EE, where it is fitted into a slate disc, perforated with holes. The pan EE is filled with water, so that the level may be just over the top of the disc CC, say half an inch. Care should be taken that the water joint at the base of the recovery chamber is deeper than the water of the "junction joint," so so that in the event of pressure the escape shall be into the second chamber. This water junction or valve should open with slight pressure. In the event of this overflow of the fumes, the excess will pass up through perforated disc, through the water, and through pipe B into the second chamber. The proper level of the water is regulated by the overflow G. To the top of each chamber is fitted a jet (or other spray diffuser), through which steam and hot water are forced, so as to be brought into contact. The jets should be capable of being easily and accurately adjusted, in order to cause a cloud or spray of very finely divided water of a temperature of about 100° Centigrade to fall through the chamber. Atmospheric air or oxygen is at the same time admitted. The construction of this hot water spray diffuser may be varied, but it is so arranged as that the quantity of air or oxygen water and steam combined or separately may be regulated. The chamber should, as is obvious, be made gas-tight, except as explained. One design for a jet is given.

When

When the chamber is charged with the fumes, the hot water spray is made to fall through the chamber, while air (or oxygen) is admitted. The lower oxides of nitrogen coming into contact with the air, are oxidized into peroxide of nitrogen, which latter is split up by the hot water spray into nitric acid and nitrous acid. The nitric acid is absorbed by the spray, and is carried down by it to the reservoir. The nitrous acid is reoxidized by the air as before, as shown in the following equation—

$$N2\ O2 + N2\ O3 + 3O = 2\ N2\ O4$$
$$2\ N2\ O4 + H2\ O = N2\ O3 + 2H\ NO3$$

and so on the reactions continuing. When (sufficient air or oxygen having been admitted) the coloured fumes have been quite cleared away, then these oxides of nitrogen will have been reconverted into nitric acid and collected in a fluid state at the bottom of the chamber. The jet should only be used when the recovery chamber is charged with the lower oxides.

Having now described the nature of my invention, and the manner in which refractory ores (as well as others) may be treated with dilute aqua regia, and in such manner as that there is no loss, or little if any of the nitric acid used,—I claim—

1. The application of this apparatus to the treatment of gold, silver, and other precious metallic ores, and also to other industrial purposes, as affecting the recovery of nitric acid by the method herein described.
2. The use of hot water spray for absorbing peroxide of nitrogen and recovering nitric acid from its lower oxides in the recovery chamber as described, and the use of hot water spray in combination with atmospheric air or oxygen for reoxidizing and absorbing the lower oxides of nitrogen and regaining the nitric acid by means of and in conjunction with the apparatus as described herein.

Dated at Sydney, the eighteenth day of October, A.D. 1878.

WILLIAM CROASDILL.

This is the specification referred to in the annexed Letters of Registration granted to William Croasdill, this twentieth day of January, A.D. 1879.

HERCULES ROBINSON.

REPORTS.

Sir, Sydney, 31 October, 1878.

We do ourselves the honor to state that, on examination of Mr. William Croasdill's application for Letters of Registration for "An Improved Method for the treatment of Pyrites and other refractory Ores containing gold, silver, and other precious metals," transmitted for our report under your blank cover communication of the 23rd instant, No. 9,035, we are of opinion that the claims attached to the specification are inadmissible in their present form. We would have explained our objections to Mr. Croasdill, had he attended a meeting of the Board as invited.

We have, &c.,
GOTHER K. MANN.
CHAS. WATT.

The Principal Under Secretary.

Sir, Sydney, 3 December, 1878.

We do ourselves the honor to report, in reply to your blank cover communication of the 25th ultimo, that we have explained to Mr. William Croasdill, who attended a meeting of the Board, the nature of the objections to the claims attached to his specification "for an Improved Method of the treatment of Pyrites, &c.," and we now therefore return the documents in question for revision by that gentleman.

We have, &c.,
GOTHER K. MANN.
CHAS. WATT.

The Principal Under Secretary.

Sir, Sydney, 16 December, 1878.

We do ourselves the honor to state that we see no objection to the issue of Letters of Registration, in terms of Mr. William Croasdill's revised claim and Petition, drawings and specification, transmitted for our further report, under your blank cover communication of the 12th instant, No. 10,643.

We have, &c.,
GOTHER K. MANN.
CHAS. WATT.

The Principal Under Secretary.

[Drawings—one sheet.]

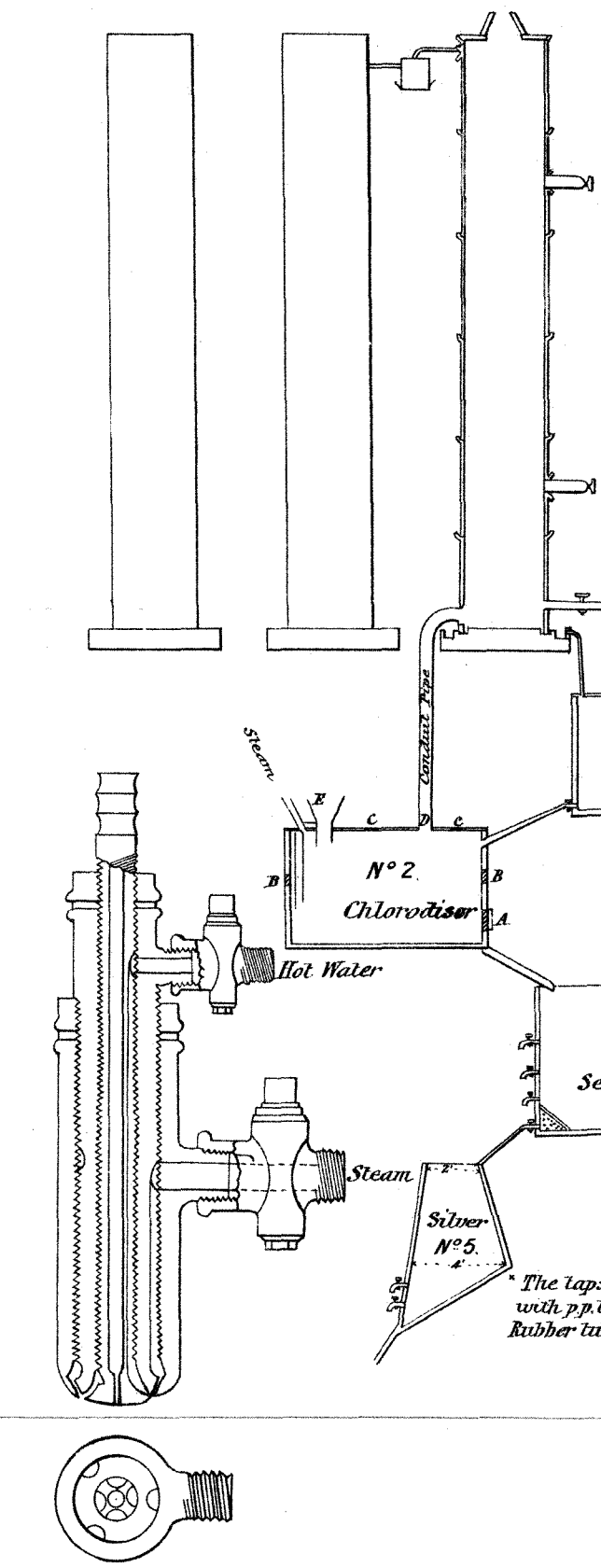

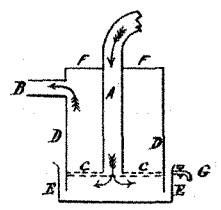

Section
Junction Joint between Towers.

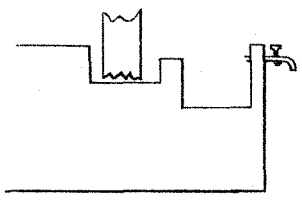

Section.
Stone Rest for Recovery Chamber

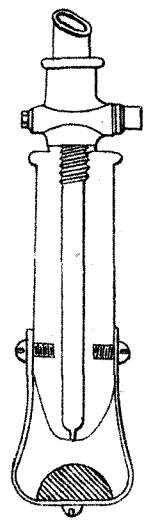

This is the Sheet of Drawings referred to in the annexed Letters of Registration granted to William Croasdill, this twentieth day of January 1879.

Hercules Robinson.

Witness
A. W. B. Bradley
Sol.
Sydney

William Croasdill

PHOTO-LITHOGRAPHED AT THE GOVT. PRINTING OFFICE, SYDNEY, NEW SOUTH WALES.

A.D. 1879, 20*th January*. No. 717.

IMPROVEMENTS IN MACHINERY FOR PRESSING PLATE METAL INTO VARIOUS FORMS.

LETTERS OF REGISTRATION to Robert Joseph Harvey, for Improvements in Machinery for pressing Plate Metal into various forms.

[Registered on the 21st day of January, 1879, in pursuance of the Act 16 Vic. No. 24.]

BY His Excellency Sir Hercules George Robert Robinson, Knight Grand Cross of the Most Distinguished Order of Saint Michael and Saint George, Governor and Commander-in-Chief of the Colony of New South Wales and its Dependencies, and Vice-Admiral of the same.

TO ALL TO WHOM THESE PRESENTS SHALL COME, greeting:

WHEREAS Robert Joseph Harvey, of No. 80, Nicholson-street, Fitzroy, near Melbourne, in the Colony of Victoria, tinsmith, hath by his Petition humbly represented to me that he is the author or designer of a certain invention or improvement in manufactures, that is to say, of an invention of "Improvements in Machinery for pressing Plate Metal into various forms," which is more particularly described in the specification and the sheet of drawings which are hereunto annexed; and that he, the said Petitioner, hath deposited with the Honorable the Treasurer of the said Colony of New South Wales the sum of Twenty Pounds sterling, for defraying the expense of granting these Letters of Registration, as required by the Act of Council, sixteenth Victoria, number twenty-four; and hath humbly prayed that I would be pleased to grant Letters of Registration, whereby the exclusive enjoyment and advantage of the said invention or improvement might be secured to him for a period of fourteen years: And I, being willing to give encouragement to all inventions and improvements in the arts or manufactures which may be for the public good, and having received a report favourable to the prayer of the said Petition, from competent persons appointed by me to examine and consider the matters stated therein and to report thereon for my information, am pleased, with the advice of the Executive Council, and in exercise of the power and authority given to me by the said Act of Council, to grant, and do by these Letters of Registration grant unto the said Robert Joseph Harvey, his executors, administrators, and assigns, the exclusive enjoyment and advantage of the said invention or improvement, for and during the term of fourteen years from the date hereof; to have, hold, and exercise unto the said Robert Joseph Harvey, his executors, administrators, and assigns, the exclusive enjoyment and advantage thereof, for and during and unto the full end and term of fourteen years from the date of these presents next and immediately ensuing, and fully to be complete and ended: Provided always, that if the said Robert Joseph Harvey shall not, within three days after the granting of these Letters of Registration, register the same in the proper office in the Supreme Court, at Sydney, in the said Colony of New South Wales, then these Letters of Registration, and all advantages whatsoever hereby granted, shall cease and become void.

In witness whereof, I have hereunto set my sign manual, and have caused the present Letters of Registration to be sealed with the seal of the said Colony of New South Wales, at Government House, Sydney, in New South Wales, this twentieth day of January, in the year of our Lord one thousand eight hundred and seventy-nine.

[L.S.] HERCULES ROBINSON.

SPECIFICATION

A.D. 1879. No. 717.

Improvements in Machinery for pressing Plate Metal into various forms.

SPECIFICATION of ROBERT JOSEPH HARVEY, of No. 80, Nicholson-street, Fitzroy, near Melbourne, in the Colony of Victoria, tinsmith, for an invention of Improvements in Machinery for pressing Plate Metal into various forms.

HITHERTO plate metal has been pressed into various forms by placing a sheet of the requisite size over a die and forcing it therein by means of a punch. The result of this process is that the edge of the metal is much puckered. Now, by my invention, this puckering is very much reduced. It consists essentially in firmly pressing the edge of the metal plate while it is being forced into the die, the pressure not being so great as absolutely to resist the force of the punch, but such as to allow the punch to gradually press the metal from between the gripping surfaces into the die.

The essential parts of a machine of this description are—a die, a punch, and a gripper or holder, all which are removable so as to enable those of a different size and shape to be substituted for those previously in use, thus enabling oblong, oval, square, as well as round dishes or articles to be moulded. The die rests on and is fastened to a bed plate. The punch is adjustable by means of a right and left handed screw, which forms the connecting link between the beam and the punch, headstock, and guide block, so as to regulate the point to which it is permitted to descend, and it has a regular up and down motion. The gripper or holder presses the edge of the metal sheets on to the top of the wall of the die; is adjustable in its framing, and has a differential up and down motion proceeding slowly whilst actually moulding the metal into form, and with greatly accelerated speed when retiring from its work and descending to it again.

Referring to the drawings hereto attached, where similar letters indicate similar parts wherever they occur, figure 1 shows side elevation of a machine constructed according to this invention; figure 2, plan thereof; and figure 3, front end elevation. A is the die, B the punch, and C the gripper.

The die is made of any suitable size and shape, and rests on an anvil or bed, A^1, to which it is fastened by dogs.

The punch is adjustable by means of screw connecting link B^1. At each side are guide blocks, B^3, running in guides, B^4. The connecting link B^1 is fastened to and worked by rocking beam or lever B^5, operated by crank on shaft B^6, through the connecting rod B^7.

The gripper or holder is supported by four pillars, C^1, on the upper end of each of which is a screw-thread, C^2, and two nuts, C^3, by means of which it can be adjusted, so as to accommodate itself to whatever die may be in use. C^4 is the crosshead, and C^5 the guide blocks, running in guides, B^4. This gripper is connected to and worked by two rocking beams, C^7 (one at each side), operated by cams, C^8, through the medium of pendent weighted blocks, C^9, having friction rollers, C^{10}, which travel over said cams. C^{11} are radius arms for preserving blocks C^9 in position; said cams are carried on shaft B^6, which receives its motion from weighted tooth-wheeled D gearing into shrouded pinion D^1, on other end of whose shaft is another toothed wheel, D^2, gearing into another shrouded pinion, D^3, on main driving shaft, D^4; D^5 is driving pulley, D^6 fly-wheel, and D^7 clutch, the latter being operated by handle D^8 and intermediate connections as shown.

The mode of operation is as follows:—A die and punch of suitable shape (say to make a milk-dish) are first fixed in position and the latter adjusted, so as to admit of its descending the right distance. The gripper or holder is then also adjusted, so as to admit of it descending to exactly the right distance likewise. The operator then places a sheet of metal in the proper position over the die, the gripper descends and grips the edge of it, followed by the punch, which forces it into the die, drawing it away somewhat from the gripper; the punch then rises quickly, followed by the gripper, the moulded sheet of metal is removed, and a fresh one put in its place by the operator, when the gripper and punch again descend, and so on until a sufficient number has been moulded. The die can then be removed, a fresh one substituted, the punch and gripper readjusted if necessary, and the machine can then proceed to mould other shapes.

It will be seen that the cams C^8 are made of such a shape as to give a very gradual and slow motion while the metal is being moulded, and a much quicker motion afterwards when it is rising and redescending to its work again.

Having thus described the nature of my invention and the manner of performing same, I would have it understood that, although I believe the arrangement of machinery herein described and illustrated is the best that can be devised for the purpose, I do not confine myself to it so long as the nature of my invention be retained, but I claim, in machinery for pressing plate metal into various forms:—

First—The holding the edge of each plate whilst it is being pressed into the die or mould.

Second—The combination and arrangement of the several mechanical devices herein described, and illustrated in my drawings, special reference being had to the cams C^8 for operating the gripper or holder.

In witness whereof, I, the said Robert Joseph Harvey, have hereto set my hand and seal, this twenty-fifth day of November, one thousand eight hundred and seventy-eight.

ROBERT JOSEPH HARVEY.

Witness—
EDWD. WATERS,
Melbourne,
Patent Agent.

This is the specification referred to in the annexed Letters of Registration granted to Robert Joseph Harvey, this twentieth day of January, A.D. 1879.

HERCULES ROBINSON.

REPORT.

Improvements in Machinery for pressing Plate Metal into various forms.

REPORT.

Sir,

Sydney, 13 December, 1878.

We do ourselves the honor to report, in reply to your blank cover communication of the 4th instant, No. 10,214, transmitting Mr. Robert Joseph Harvey's application for Letters of Registration of "Improvements in Machinery for pressing Plate Metal into various forms," that we are of opinion that the prayer of Mr. Harvey's Petition may be granted, in terms of his specification, drawings, and claim.

We have, &c.,
GOTHER K. MANN.
JOHN WHITTON.

The Principal Under Secretary.

[Drawings—one sheet.]

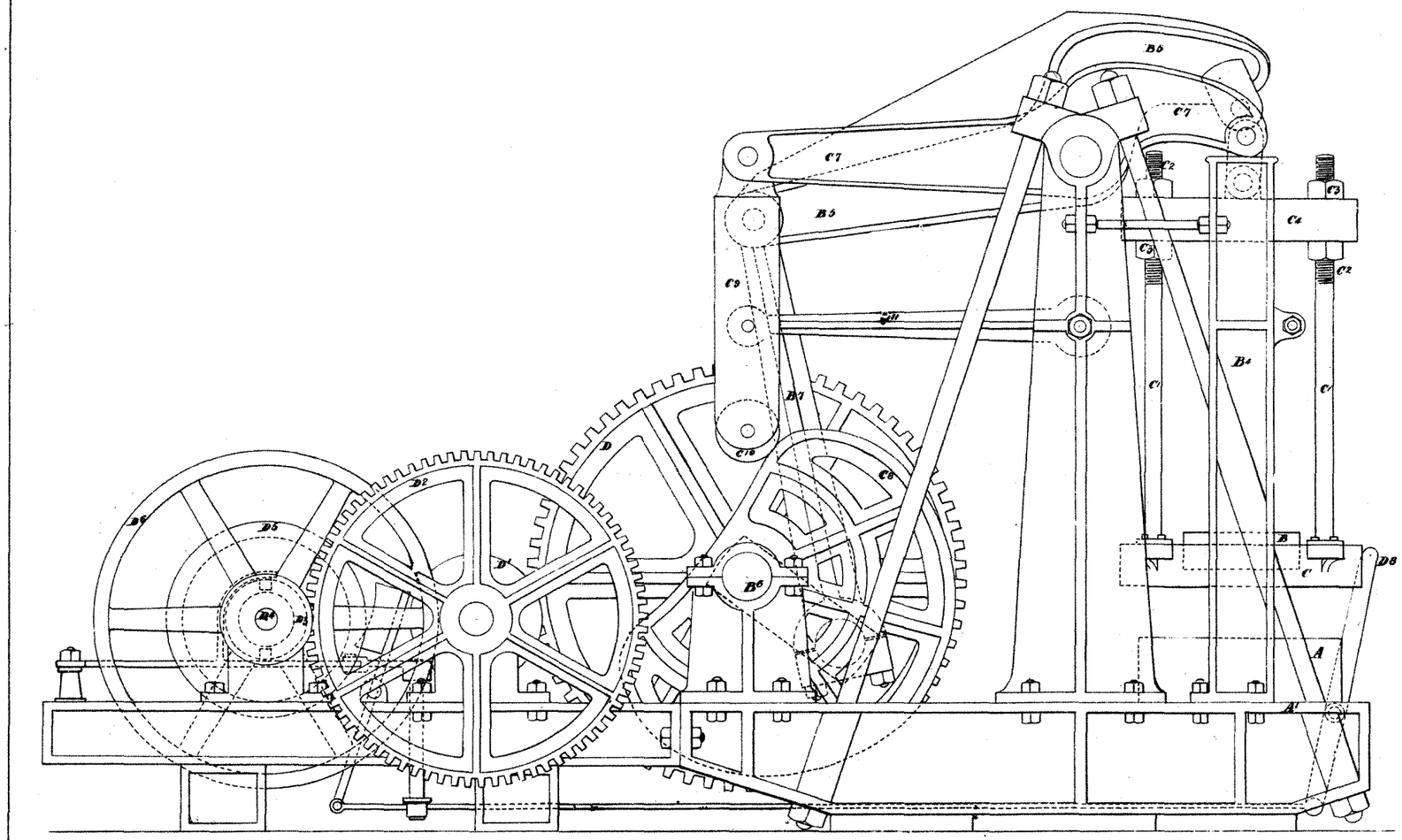

Fig. 1.

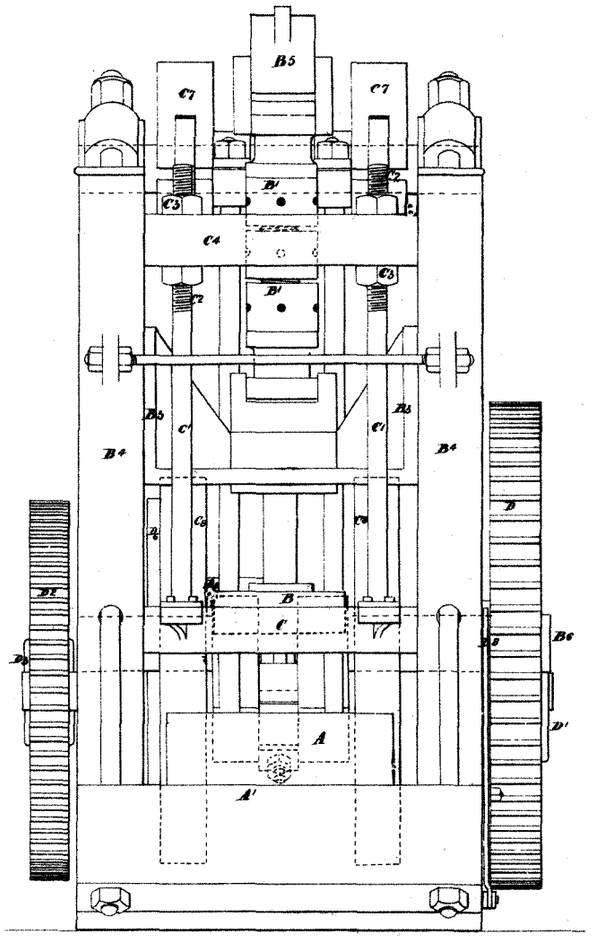

Fig. 3.

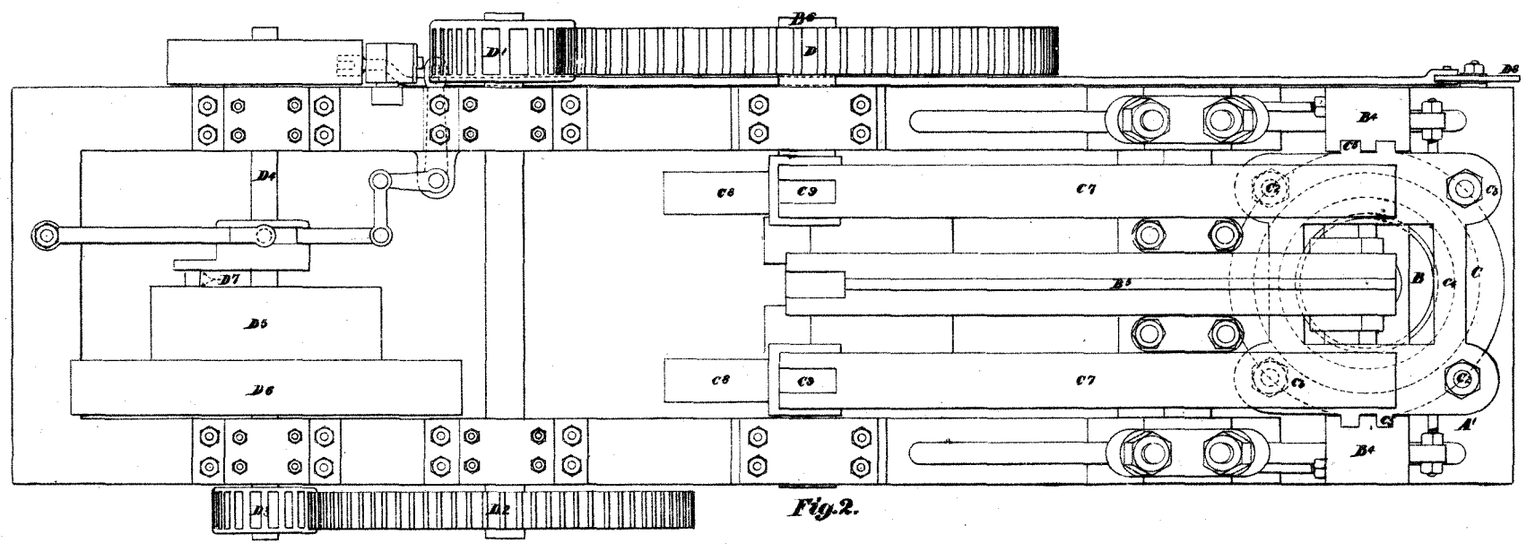

Fig. 2.

R. J. HARVEY'S.

PATENT.

PHOTO-LITHOGRAPHED AT THE GOVT. PRINTING OFFICE, SYDNEY, NEW SOUTH WALES.

This is the Sheet of Drawings referred to in the annexed Letters of Registration granted to Robert Joseph Harvey this twentieth day of January A.D. 1879.

(Sig: 198-)

"Hercules Robinson"

A.D. 1879, 30*th January.* No. 718.

AN INVENTION FOR THE RAPID EVAPORATION OF LIQUIDS, ESPECIALLY SACCHARINE LIQUIDS OR JUICES.

LETTERS OF REGISTRATION to Joseph William Sutton, for an Invention for the rapid evaporation of liquids, especially saccharine liquids or juices.

[Registered on the 31st day of January, 1879, in pursuance of the Act 16 Vic. No. 24.]

BY His Excellency Sir Hercules George Robert Robinson, Knight Grand Cross of the Most Distinguished Order of Saint Michael and Saint George, Governor and Commander-in-Chief of the Colony of New South Wales and its Dependencies, and Vice-Admiral of the same.

TO ALL TO WHOM THESE PRESENTS SHALL COME, greeting:

WHEREAS Joseph William Sutton, of Brisbane, in the Colony of Queensland, coppersmith, hath by his Petition represented to me that he is the author or designer of a certain invention or improvement in manufactures, that is to say, of an invention entitled "An invention for the rapid evaporation of liquids, especially saccharine liquids or juices," which is more particularly described in the specification (described as "Specification" and "Description") and the sheet of drawings which are hereunto annexed; and that he, the said Petitioner, hath deposited with the Honorable the Treasurer of the said Colony of New South Wales the sum of Twenty Pounds sterling, for defraying the expense of granting these Letters of Registration, as required by the Act of Council, sixteenth Victoria, number twenty-four; and hath humbly prayed that I would be pleased to grant Letters of Registration, whereby the exclusive enjoyment and advantage of the said invention or improvement might be secured to him for a period of fourteen years: And I, being willing to give encouragement to all inventions and improvements in the arts or manufactures which may be for the public good, and having received a report favourable to the prayer of the said Petition, from competent persons appointed by me to examine and consider the matters stated therein and to report thereon for my information, am pleased, with the advice of the Executive Council, and in exercise of the power and authority given to me by the said Act of Council, to grant, and do by these Letters of Registration grant unto the said Joseph William Sutton, his executors, administrators, and assigns, the exclusive enjoyment and advantage of the said invention or improvement, for and during the term of fourteen years from the date hereof; to have, hold, and exercise unto the said Joseph William Sutton, his executors, administrators, and assigns, the exclusive enjoyment and advantage thereof, for and during and unto the full end and term of fourteen years from the date of these presents next and immediately ensuing, and fully to be complete and ended: Provided always, that if the said Joseph William Sutton shall not, within three days after the granting of these Letters of Registration, register the same in the proper office in the Supreme Court, at Sydney, in the said Colony of New South Wales, then these Letters of Registration, and all advantages whatsoever hereby granted, shall cease and become void.

In witness whereof, I have hereunto set my sign manual, and have caused the present Letters of Registration to be sealed with the seal of the said Colony of New South Wales, at Government House, Sydney, in New South Wales, this thirtieth day of January, in the year of our Lord one thousand eight hundred and seventy-nine.

[L.S.] HERCULES ROBINSON.

A.D. 1879. No. 718.

An invention for the rapid evaporation of liquids.

SPECIFICATION of a certain Invention for the rapid evaporation of liquids, and by preference saccharine liquids or juices.

The present methods—known as open pan boiling—chiefly in use for the evaporation of saccharine liquids or juices are as follows :—

1st. Open fire.
2nd. Steam jacketed pans.
3rd. Steam coil pans.
4th. Steam jacketed and steam coil pans.

The inventor, for the purposes of evaporation, uses the ordinary open pans, either square or circular, and heated by one of the methods specified, but by choice steam jackets or coils, and in addition to the same applies a pipe or pipes, plate or plates perforated, which are placed below the surface of the liquids or juices, and through which cold or heated, dry or moist air is blown or forced in currents, by means of a fan, air-pump, or other suitable means.

The currents of air ascending through the liquid or juices cause violent agitation or ebullition, which increases the evaporative power of same.

Having now described the nature of the said invention and in what manner the same is to be performed, I declare that what I claim and desire to protect by Letters Patent is, the blowing or forcing of cold or heated, dry or moist air below the surface of liquids or juices, for the purpose of rapid evaporation, and the application of blowers, known as "Rotary Pressure Blowers," for that purpose.

JOSEPH WILLIAM SUTTON.

This is the specification referred to in the annexed Letters of Registration granted to Joseph William Sutton, this thirtieth day of January, A.D. 1879.

HERCULES ROBINSON.

DESCRIPTION of low temperature rapid evaporating steam pan, as per annexed plan.

The pan consists of an ordinary shallow metal one, A, as used for open boiling, being heated by means of a steam coil, B, either with exhaust steam or direct, or both as required, and beneath which are fixed a series of pipes perforated, C, fixed through end of pan, into an air chamber, D, which is connected by a pipe, E, with a pressure blower, F, driven by a belt from line shaft G, or by preference a small independent engine.

The steam pipes or coil B can be raised or lowered for cleaning.

The air pipes perforated, C, can be unscrewed and easily removed if required.

In the bottom of the pan A (which is concave) is fixed a valve, H, for drawing off the liquor or saccharine juice.

In the air chamber D is fixed a cock or valve, I, which answers for two purposes, viz., to relieve air blast and to draw off any liquor or juice which may find its way there through the perforations when the blast is off.

One or more pans can be used, supplied with air from the same pressure blower, the pressure of air being regulated by the speed of the blower.

The boiling temperature is low (as in the case of the vacuum pan), varying with the density of the atmosphere.

The plan only shows arrangement for the supply of air at the temperature of the atmosphere, but when desired the air can be heated to the required dryness or temperature by means of pipes in the boiler, flues, chimney, or other simple means.

Very small power is required to drive the pressure blower in comparison with amount of extra evaporation.

JOSEPH WILLIAM SUTTON.

REPORT.

Sir,

Sydney, 30 December, 1878.

We do ourselves the honor to report, in reply to your blank cover communication of the 20th instant (No. 10,872), that we see no objection to the issue of Letters of Registration in favour of Mr. Joseph William Sutton, for "An invention for the rapid evaporation of liquids, especially saccharine liquids and juices," in accordance with Mr. Sutton's Petition, specification, drawings, and claim.

We have, &c.,
GOTHER K. MANN.
CHAS. WATT.

The Principal Under Secretary.

[Drawings—one sheet.]

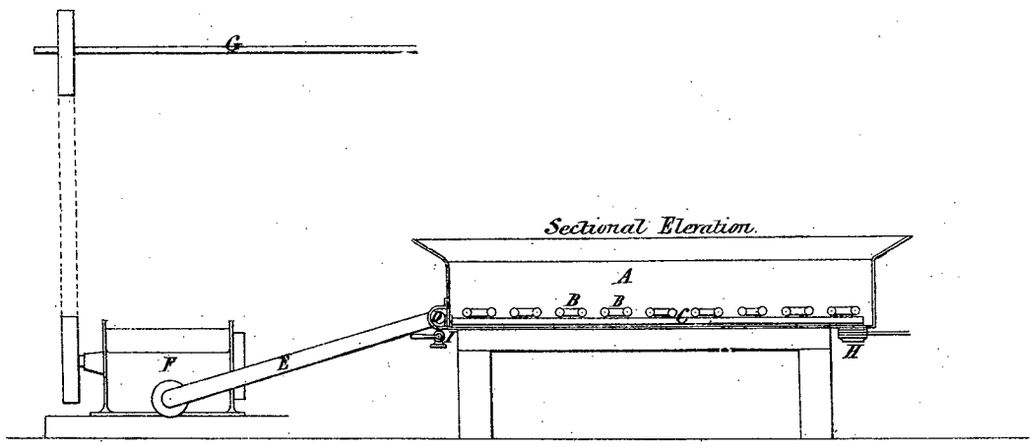

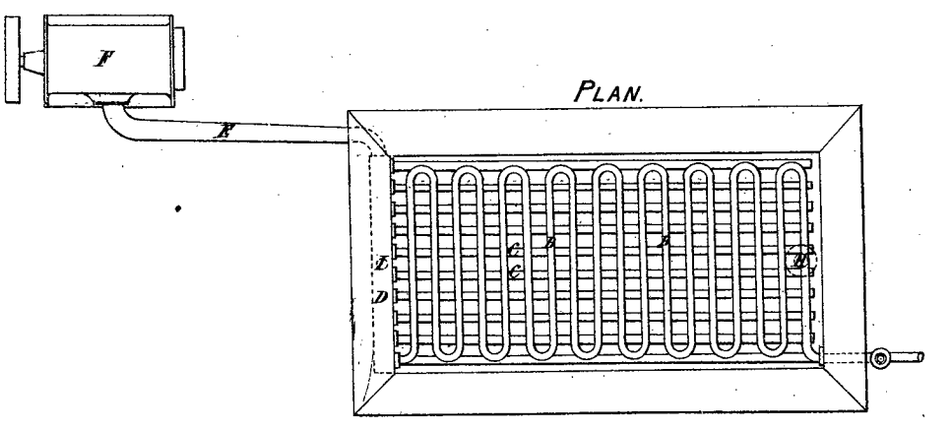

Joseph William Sutton.

This is the Sheet of Drawings referred to in the annexed Letters of Registration granted to Joseph William Sutton, this thirtieth day of January A.D. 1879.

Hercules Robinson.

PHOTO-LITHOGRAPHED AT THE GOVT. PRINTING OFFICE, SYDNEY, NEW SOUTH WALES.

A.D. 1879, 30*th January*. No. 719.

IMPROVED PROCESS FOR THOROUGHLY WASHING, SCOURING, AND BLEACHING THE WOOL UPON SHEEP, &c.

LETTERS OF REGISTRATION to Pierre Puech, for an improved process for thoroughly washing, scouring, and bleaching the Wool upon Sheep and other such skins, in order to obtain flocky, Roubaisienne half-combed, and fleecy wool.

[Registered on the 31st day of January, 1879, in pursuance of the Act 16 Vic. No. 24.]

BY HIS EXCELLENCY SIR HERCULES GEORGE ROBERT ROBINSON, Knight Grand Cross of the Most Distinguished Order of Saint Michael and Saint George, Governor and Commander-in-Chief of the Colony of New South Wales and its Dependencies, and Vice-Admiral of the same.

TO ALL TO WHOM THESE PRESENTS SHALL COME, greeting:

WHEREAS PIERRE PUECH, of Mazamet-on-Tarn, in the Republic of France, manufacturer, hath by his Petition humbly represented to me that he is the author or designer of a certain invention or improvement in manufactures, that is to say, of an invention entitled "An improved process for thoroughly washing, scouring, and bleaching the Wool upon Sheep and other such skins, in order to obtain flocky, Roubaisienne half-combed, and fleecy wool," which is more particularly described in the specification which is hereunto annexed; and that he, the said Petitioner, hath deposited with the Honorable the Treasurer of the said Colony of New South Wales the sum of Twenty Pounds sterling, for defraying the expense of granting these Letters of Registration, as required by the Act of Council, sixteenth Victoria, number twenty-four; and hath humbly prayed that I would be pleased to grant Letters of Registration, whereby the exclusive enjoyment and advantage of the said invention or improvement might be secured to him for a period of fourteen years: And I, being willing to give encouragement to all inventions and improvements in the arts or manufactures which may be for the public good, and having received a report favourable to the prayer of the said Petition, from competent persons appointed by me to examine and consider the matters stated therein and to report thereon for my information, am pleased, with the advice of the Executive Council, and in exercise of the power and authority given to me by the said Act of Council, to grant, and do by these Letters of Registration grant unto the said Pierre Puech, his executors, administrators, and assigns, the exclusive enjoyment and advantage of the said invention or improvement, for and during the term of fourteen years from the date hereof; to have, hold, and exercise unto the said Pierre Puech, his executors, administrators, and assigns, the exclusive enjoyment and advantage thereof, for and during and unto the full end and term of fourteen years from the date of these presents next and immediately ensuing, and fully to be complete and ended: Provided always, that if the said Pierre Puech shall not, within three days after the granting of these Letters of Registration, register the same in the proper office in the Supreme Court, at Sydney, in the said Colony of New South Wales, then these Letters of Registration, and all advantages whatsoever hereby granted, shall cease and become void.

In witness whereof, I have hereunto set my sign manual, and have caused the present Letters of Registration to be sealed with the seal of the said Colony of New South Wales, at Government House, Sydney, in New South Wales, this thirtieth day of January, in the year of our Lord one thousand eight hundred and seventy-nine.

[L.S.] HERCULES ROBINSON.

Improved process for thoroughly washing and bleaching the Wool upon Sheep, &c.

SPECIFICATION of PIERRE PUECH, of Mazamet-on-Tarn, in the Republic of France, manufacturer, for an invention entitled "An improved process for thoroughly washing, scouring, and bleaching the Wool upon Sheep, and other such skins, in order to obtain flocky, Roubaisienne half-combed, and fleecy wool."

THE intention in applying for Letters of Registration for the invention herein set forth, is to secure to myself the exclusive property of a process which consists in extracting, in a fleecy, flocky, and partly combed state, all the wool of a sheep's skin, without injuring the length, consistency, and regularity of the staple of the wool, and at the same time to effect a thorough and complete washing and scouring of the wool, not excluding bleaching, which is optional, according to the condition to which the wool is desired to be brought or is to be applied.

The successive operations employed up to the present time, in treating dry skins or American sheep skins (the treatment of which this invention more especially applies to), and the object of which treatment is the extraction, washing, and scouring the wool of these skins are as follow :—

First—The skins are steeped after or before beating in cold water for about forty-eight hours.

Second—They are then suspended in drying stoves, where they are left until they reach a state of heat and fermentation which renders them more easy to strip or separate from the wool. This operation or fermentation generally requires (to render it complete) from twenty-four to forty-eight hours in summer, and from four to eight days in winter.

Third—On leaving the drying stove the skins are stripped.

Fourth—After this stripping there remains the operation of washing the wool, which each person performs in his own way, some cold and some hot; this operation requires the use of washing-machines, in which the wool is broken, and from which it is withdrawn in confused and tangled staples one in the other.

Finally—By these several and successive operations quite a week's labour is required, with the result that the wool is broken by the washing-machine and the skin injured by the drying.

The process I have invented entirely differs from known methods by the operations it requires and the remarkable results it produces. In less than two hours the most difficult skins to operate on are treated, and the wool is obtained, either fleecy, or flocky, or partly combed, very different from that produced by the old process, far more beautiful, never broken, and a skin never injured.

Applied to ordinary skins my process requires a few minutes only.

The following is a description of the process forming the subject of the present invention :—

First—Prepare at a temperature of forty-five to fifty degrees Centigrade an ordinary water bath, adding thereto a scouring matter of some sort, such as soda-salt, soda-crystal, or soap; steep in this from four to ten minutes the dry skins as they arrive from America or other foreign country. For fresher skins, such as those more recently slaughtered, from three to five minutes suffices.

Second—Immediately pass the skins to a pressing roller of sufficient power to detach the grease, dirt, and other impurities from the wool.

Third—Immediately after process No. 2, and while the skins are still warm, transfer them to a beating machine, such for example as Chaudet's, of Rouen, or some equivalent. The object of this operation is to beat the skin and free it of all foreign matters, and at the same time to thoroughly wash it in either cold, tepid, or hot water, which is made to fall abundantly between the drum of the machine and the apron supporting the skin.

Fourth—For ten minutes or thereabouts steep the skins (which are now freed from all foreign matters, and are well washed) in a bath containing tepid or hot water, the object of which is to soften the skin and to prepare the pores for the subsequent stripping.

Fifth—Wring the skins or express the moisture by the aid of a pressing roller, to which is adapted a beater which energetically agitates the skin; after leaving the pressing roller, and before letting it fall, the staple rises and becomes flocky.

Sixth—Whilst the skin is still tepid (with a brush or otherwise) pass over the flesh side a depilatory of suitable matter, such as sulphydrate of soda, or generally any earthy alkaline sulphuret (sulphure alcaline terreux).

Seventh—Finally strip the skins, either by hand or mechanically, and then allow them to dry.

Wool thus obtained is flocky wool. If after stripping care has been taken not to let the wool dry, that is to say to keep it moist, it is what we call Roubaisienne or half-combed wool, and can be delivered without any intermediate operations to the carding or combing machines.

The scouring and washing having been effected on the skin itself, all the operations hitherto employed to prepare the wool for combing are done away with; the staples are perfectly preserved, and are not tangled one with the other—in fact the combing is effected immediately after stripping; the waste is reduced to a minimum, and any undried wool is of a superior quality and eminently fit for combing, since at the moment of its separation from the skin it is as it were half-combed.

To produce fleecy wool or eider-downy, the seven preceding operations are succeeded by the following :—

Eighth—Pass the flocky wool obtained as herein described into a bath containing tepid water, accompanied by a movement of forks which turns the wool over two or three times.

Ninth—Wring or express the moisture, either by the use of pressing rollers or by a pressing machine of some kind.

Tenth—Dry the wool thus treated, that is to say, beaten, washed, and thoroughly scoured, and the result desired, that is, the production of a flocky and fleecy wool, will be obtained.

Improved process for thoroughly washing and bleaching the Wool upon Sheep, &c.

After submitting the skins to the five first operations, instead of using the depilatory substance as described in paragraph 6, these skins may, if desired, be put into the drying stove, as is practised in the known methods. Stripping the skins is easier, as they enter the drying stove quite hot, and in this state the wool leaves them better and quicker. By both means the stripping is facilitated, but preference is given to the use of the depilatory, because placing the skins in the stove is not only injurious to the good preservation of the wool, but it also takes eight days, and in the winter the excessive cold renders it impracticable.

When the wool is detached from the skin it can be submitted to the eighth, ninth, and tenth operations already enumerated, and the wool will be as flocky or fleecy as with the use of the depilatory composition, with this difference however, that it has been reddened or yellowed by its passage through the drying stove, and that it is not so white ; but I have deemed it desirable to mention this mode of procedure, although less advantageous in its results than the treatment before described, characterized like the latter by the preceding operations, and on which is based the principle which forms the essential part of my claims.

In conclusion, I will make an observation in relation to the steeping described in paragraph 4 of this description. The object of this steeping in tepid water is to soften and render the skin pliant, to prepare it for being stripped, and the duration of ten minutes assigned to it is only to secure the regularity of the effects of the depilatory matter, so that should it be deemed advisable to prolong the duration the strength of the depilatory solution employed should be reduced, and after an immersion of some hours the use of the depilatory solution becomes almost useless.

Bleaching the wool is an optional operation in connection with the process described, by adding to the tepid bath referred to in paragraph 4 (and whilst the skins are steeping) a bleaching substance of some sort, the skins are left a few minutes longer, and the operations which follow and such as are specified herein are continued.

The characteristic points, therefore, of my process rest in each of the successive operations comprising it and the results it effects, especially a perfect washing and scouring of the wool on the skin itself, without injuring in any way the length, consistency, and regularity of its staple, much better products than those obtained from the known methods, a flocky and fleecy wool and an uninjured skin.

Besides the superiority of the products, the advantages of my process rest in the saving of time, since I treat in two hours the most difficult skins, whilst the process at present employed requires a week of labour. Fresh skins can be treated even in a few minutes.

I claim the above treatment when applied to fresh skins as well as to dry ; and the modification of the treatment, as numerically stipulated herein, according to the nature of the skins to be operated on, as well as the modification indicated, in case the depilatory substance is not employed.

I claim the exclusive right to the process described in this specification, and more particularly destined (without however excluding fresh skins or skins of the country) to the treatment of the dry skins of America ; for example, by submitting these skins to a washing, thorough scouring, and bleaching of the wool on the skin of the sheep itself, and obtaining therefrom, as desired, either a flocky or what I call Roubaisienne or partly-combed wool, or fleecy wool, that is, preserved in its fleecy condition.

My process consists briefly in taking the dry skins, such as come from America, in steeping them in a hot bath to remove the grease, in pressing them sufficiently to extract the filth and impurities, in beating and washing them simultaneously in cold or hot water, steeping them for a longer or shorter period in a tepid bath, to which is or is not added a bleaching matter, to wring and beat them, and to strip them with or without a depilatory (which latter may, however, be replaced by putting them in the drying stove, though less advantageous). The wool thus obtained is what I call Roubaisienne or half-combed wool, which dried becomes flocky wool, and this latter in turn becomes fleecy wool, if required, by passing it through a tepid bath, and there submitting it to the action of forks which turn it about, when it is withdrawn and finally dried.

In witness whereof, I, the said Pierre Puech, have hereto set my hand and seal, this twenty-sixth day of August, 1878.

PIERRE PUECH.

Witnesses—

A. Britry, 6, Rue des Filles du Calvaire, Paris.
W. H. Beck, 139, Cannon-street, London.

This is the specification referred to in the annexed Letters of Registration granted to Pierre Puech, this thirtieth day of January, A.D. 1879.

HERCULES ROBINSON.

REPORT.

Improved process for thoroughly washing and bleaching the Wool upon Sheep, &c.

REPORT.

Sydney, 3 January, 1879.

Sir,

We do ourselves the honor to report, in reply to your blank cover communication of the 17th ultimo, No. 10,684, transmitting Mr. Pierre Puech's application for the registration of "An improved process for thoroughly washing, scouring, and bleaching the Wool upon Sheep and other such skins, in order to obtain flocky, Roubaisienne half-combed, and fleecy wool," that we see no objection to the issue of Letters of Registration, in accordance with Mr. Puech's Petition, specification, and claim.

We have, &c.,
GOTHER K. MANN.
CHAS. WATT.

The Principal Under Secretary.

No. 720.

[Assignment of No. 440. See page 101 of Return of 28 May, 1877.]

A.D. 1879, 20*th February*. No. 721.

IMPROVEMENTS IN ELECTRIC LAMPS, &c.

LETTERS OF REGISTRATION to the Société Générale d'Electricité, procédés Jablochkoff, for Improvements in Electric Lamps, and in arrangements connected therewith for dividing and distributing the Electric Light.

[Registered on the 22nd day of February, 1879, in pursuance of the Act 16 Vic. No. 24.]

BY His Excellency Sir Hercules George Robert Robinson, Knight Grand Cross of the Most Distinguished Order of Saint Michael and Saint George, Governor and Commander-in-Chief of the Colony of New South Wales and its Dependencies, and Vice-Admiral of the same.

TO ALL TO WHOM THESE PRESENTS SHALL COME, greeting:

WHEREAS The Société Générale d'Électricité, procédés Jablochkoff, of number 7, Rue Drouot, Paris, in the French Republic, have by their Petition humbly represented to me that they are the assignees of Paul Jablochkoff, who is the author or designer of a certain invention or improvement in manufactures, that is to say, of an invention entitled "Improvements in Electric Lamps, and in arrangements connected therewith for dividing and distributing the Electric Light," which is more particularly described in the specification and the sheet of drawings which are hereunto annexed; and that they, the said Petitioners, have deposited with the Honorable the Treasurer of the said Colony of New South Wales the sum of Twenty Pounds sterling, for defraying the expense of granting these Letters of Registration, as required by the Act of Council, sixteenth Victoria, number twenty-four; and have humbly prayed that I would be pleased to grant Letters of Registration, whereby the exclusive enjoyment and advantage of the said invention or improvement might be secured to them for a period of fourteen years: And I, being willing to give encouragement to all inventions and improvements in the arts or manufactures which may be for the public good, and having received a report favourable to the prayer of the said Petition, from competent persons appointed by me to examine and consider the matters stated therein and to report thereon for my information, am pleased, with the advice of the Executive Council, and in exercise of the power and authority given to me by the said Act of Council, to grant, and do by these Letters of Registration grant unto the said Société Générale d'Electricité, procédés Jablochkoff, their executors, administrators, and assigns, the exclusive enjoyment and advantage of the said invention or improvement, for and during the term of fourteen years from the date hereof; to have, hold, and exercise unto the said Société Générale d'Electricité, procédés Jablochkoff, their executors, administrators, and assigns, the exclusive enjoyment and advantage thereof, for and during and unto the full end and term of fourteen years from the date of these presents next and immediately ensuing, and fully to be complete and ended: Provided always, that if the said Société Générale d'Electricité, procédés Jablochkoff, shall not, within three days after the granting of these Letters of Registration, register the same in the proper office in the Supreme Court, at Sydney, in the said Colony of New South Wales, then these Letters of Registration, and all advantages whatsoever hereby granted, shall cease and become void.

In witness whereof, I have hereunto set my sign manual, and have caused the present Letters of Registration to be sealed with the seal of the said Colony of New South Wales, at Government House, Sydney, in New South Wales, this twentieth day of February, in the year of our Lord one thousand eight hundred and seventy-nine.

[L.S.] HERCULES ROBINSON.

Improvements in Electric Lamps, &c.

SPECIFICATION of the Société Générale d'Electricité, procédés Jablochkoff, of No. 7, Rue Drouot, Paris, in the French Republic, for an invention entitled "Improvements in Electric Lamps, and in arrangements connected therewith for dividing and distributing the Electric Light."

In electric lamps as usually constructed, the carbon points are placed end to end, and mechanism is provided for the purpose of maintaining them always at suitable distance from each other as they are wasted.

According to this invention we place the pieces of carbon side by side, separating them by an insulating substance, which is consumed along with the carbon. We are thus enabled to dispense with all regulating mechanism, and also to colour, subdivide, and vary the light produced, as we will now explain.

The insulating substance for separating the carbons may be kaolin, glass of various kinds, ingredients of glass and porcelain, earths, alkaline earths, silicates, and the like, which we generally prefer to apply in the form of powder rammed into an asbestos cartridge case containing the carbons. A powder which we find serviceable consists of 1 part lime, 4 parts sand, and 2 parts talc. These materials, reduced to a fine powder and intimately mixed, are rammed into the cartridge case surrounded and separating two parallel sticks of suitable carbon placed in the case at a little distance apart, one of which is made thicker than the other to allow for its more rapid waste; when the case is thus filled it may be sealed with silicate of potass. The lower ends of the carbons are inserted into pieces of tube of copper or other good conductor separated from one another by asbestos, and the ends of these tubes are pinched between two limbs of a screw vice connected respectively to the conducting wires. The whole may be placed on a wooden or other non-conducting base, so as to constitute a candlestick or lamp, which may be provided with a gallery and an opal or other globe.

The heat produced by the electricity fuses the materials between the carbons and dissipates it, but the resulting light may be coloured by introducing into the insulating material some of the substances usually employed in producing coloured lights; for example, salts of soda, giving out a yellow light, will neutralise more or less the excess of blue produced by the electric light. Great lustre is obtained by mixing graphite with the insulating substance.

Instead of placing the pieces of carbon in a cartridge case charged with insulating powder, they may be imbedded in solid insulating material, such as kaolin; also, the carbons may be made tubular; or, instead of carbon other conducting material may be employed, metals for example, and such tubular conductors may be filled inside with material like that which surrounds them outside; for example, a paste composed of siliceous or earthy matter, also powdered carbon; this material by its fusion forms a liquid bath surrounding the electric points somewhat like that which surrounds the wick of a candle, and this fluid gives passage to the incandescent particles from the one point to the other more freely than when they have to pass in the usual way through an air space, producing a fine uniform light, to which great brilliancy is given by the use of carbon powder. The flame may be fed by dropping on the seat of the combustion a regular shower of siliceous matters. The freedom of passage afforded by the fused material to the electric current permits the subdividing of the light by placing several lamps in the course of one electric circuit, each of these lamps producing a portion of the light which is usually concentrated in one.

For lighting an electric lamp such as we have described, a piece of carbon held by an insulator is placed on the two points, and the circuit being thus completed the light is developed and the piece of carbon is withdrawn.

When there are a number of lights in one electric circuit each may be provided with a pulverulent match, so that when a current is passed into the conductor each light is kindled.

In order to provide against the interruption of the circuit in case of one of the lights being extinguished, each may be worked by relay from the main circuit.

Description of the Drawings.

Fig. 1 represents a vertical section, and figs. 2 and 3 represent sectional plans at X and Y respectively, of one form of electric candle according to this invention.

a and *b* are the two rods of carbon, which are pointed at the upper end, and of which the one, *b*, which is to receive the positive current of electricity is made larger than the other, *a*, to allow for its more rapid consumption; these rods are placed parallel to each other in a case or cartridge, *c*, made of asbestos card or paper. The space within the cartridge surrounding the rods *a* and *b* is filled with one of the powders mentioned above, the constituents of which are thoroughly mingled, so as to get a uniform mixture. When the cartridge is filled, the mouth is stopped by a paste of silicate of potass. To conduct the electricity to the carbon rods, their lower ends are inserted in tubes, *d* and *f*, of copper or other good conducting metal, which are insulated from each other by a strip, *g*, of asbestos card.

Fig. 4 represents a vertical section, and fig. 5 a side view of one form of candlestick suitable for the electric candle above described. The tubes *d f* of the candle are gripped between two insulated vice-jaws, *h j*, worked by screws, *k l*, and having pinching screws, *n p*, for the + and — wires electrically connected to *f* and *d* respectively; *m* is a base or stand of wood or other non-conducting material, from which extend supports, *q q*, of a gallery, *r*, to hold an opal or coloured glass globe, *s*.

The construction of the candle may be varied, as for example in the manner shown by the vertical section fig. 1 bis and the sectional plans figs. 2 bis and 3 bis, taken at X and Y respectively. In this case the carbon rods *a* and *b*, and tubes *d f*, are round the former instead of being contained in a cartridge, being merely separated by a partition of kaolin or other similar insulating material.

Other forms of candles are shown by the plans, figs. 6, 7, 8, and 9. The arrangement in fig. 6 is similar to that in figs. 1 bis, 2 bis, and 3 bis, with rods of rectangular section; in fig. 7 the rods are enclosed in a rectangular case instead of the oval case shown in fig. 2; in fig. 8 one of the rods is inside a case and the other outside; and in fig. 9 one of the rods is of annular section, forming a case containing the other rod, which is central and surrounded by the insulating material.

Having

Having thus described the nature of the said invention, and in what manner the same is to be performed, we claim :—

First—The method, substantially as herein described, of producing electric light by the use of two parallel conducting rods separated by an insulating substance, which is consumed along with them, thus dispensing with mechanism for adjusting the distance of the carbon points.

Second—The use, for separating the parallel rods above referred to, of compact substances difficult of fusion, such as kaolin, ingredients of glass or porcelain, or powdered mixtures of earthy or siliceous substance, substantially as herein described.

Third—The construction of an electric candle consisting of two parallel conducting rods of carbon or metal insulated from each other, substantially as herein described.

Fourth—Constructing an electric candlestick with two insulated vice-jaws arranged to hold and establish electric communication with the electric candle referred to in the preceding claim, substantially as herein described.

Fifth—Subdividing electric light by several electric candles in one circuit, substantially as herein described.

Sixth—The method, substantially as herein described, of lighting an electric candle or several such candles arranged in one electric circuit.

Seventh—The method, substantially as herein described, of varying the colour and lustre of the electric light, by introducing metallic and other powders in the insulating material.

In witness whereof, we, the said Société Générale d'Electricité, procédés Jablochkoff, have hereunto set our hand and seal, this twenty-fourth day of October, in the year of our Lord one thousand eight hundred and seventy-eight.

N. VABEY,
LAURENT DESCOURS,
Directors of the said Société Générale d'Electricité, procédés Jablochkoff.

Witness—JULES ARMENGAUD JEUNE.

This is the specification referred to in the annexed Letters of Registration granted to the Société Générale d'Electricité, procédés Jablochkoff, this twentieth day of February, A.D. 1879.

HERCULES ROBINSON.

REPORT.

Sir,

Sydney, 30 January, 1879.

The application of the Société Générale d'Electricité, procédés Jablochkoff, for Letters of Registration for "Improvements in Electric Lamps and in arrangements connected therewith" having been referred to us, we have examined the specification and drawings accompanying the same, and have now the honor to report that we see no objection to the issue of Letters of Registration as prayed for.

We have, &c.,
J. SMITH.
E. C. CRACKNELL.

The Principal Under Secretary.

[Drawings—one sheet.]

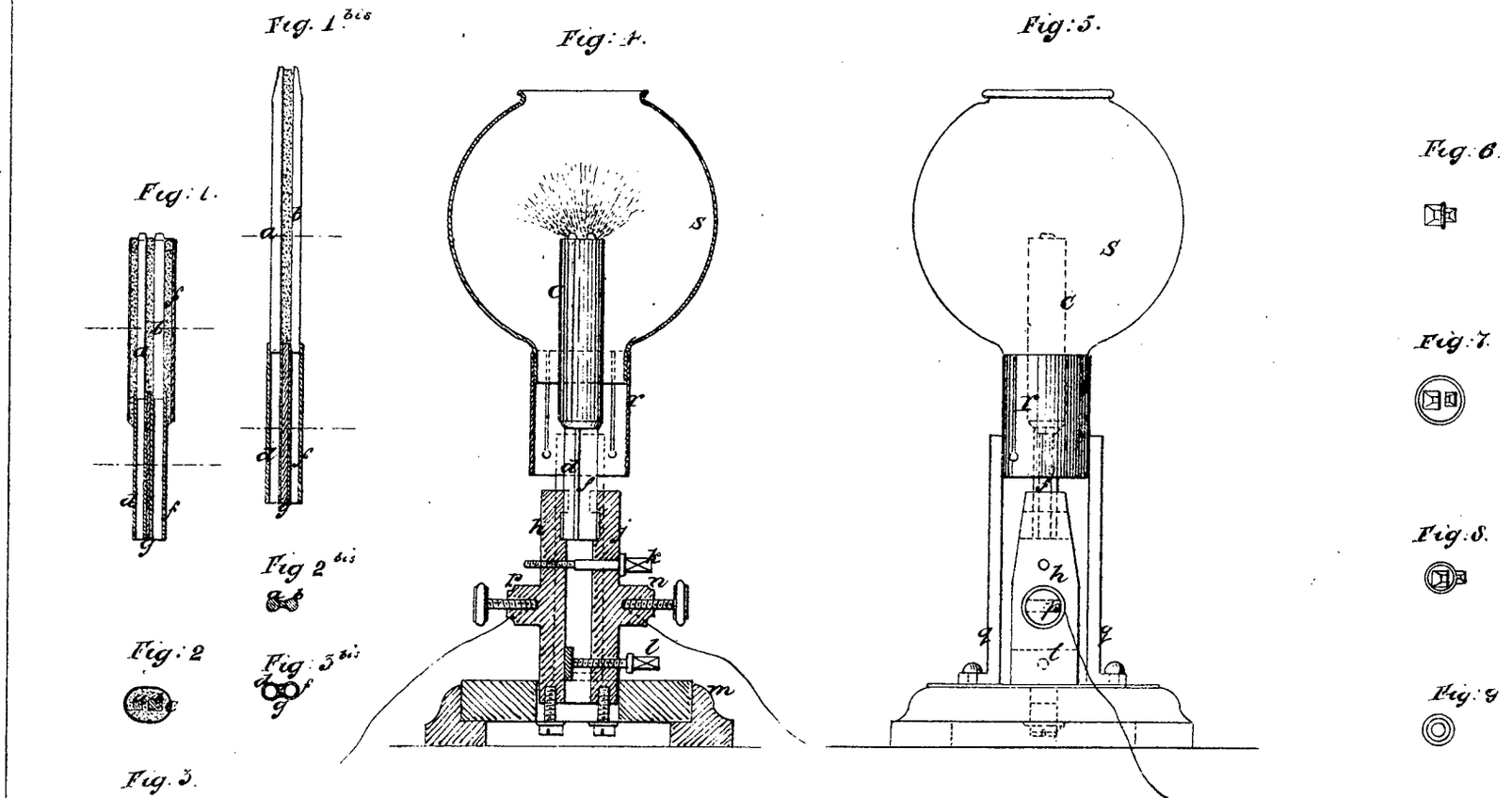

This is the Sheet of Drawings referred to in the annexed Letters of Registration granted to The Société Générale d'Electricité procedes Jablochkoff this twenty-eighth day of February A.D. 1879.

(Sig. 198-)

Hercules Robinson

A.D. 1879, 20*th February.* No. 722.

APPARATUS FOR PRESERVING MEAT AND OTHER PERISHABLE SUBSTANCES.

LETTERS OF REGISTRATION to Daniel Williams, for an Apparatus for preserving Meat and other perishable substances.

[Registered on the 22nd day of February, 1879, in pursuance of the Act 16 Vic. No. 24.]

BY His Excellency Sir Hercules George Robert Robinson, Knight Grand Cross of the Most Distinguished Order of Saint Michael and Saint George, Governor and Commander-in-Chief of the Colony of New South Wales and its Dependencies, and Vice-Admiral of the same.

TO ALL TO WHOM THESE PRESENTS SHALL COME, greeting:

WHEREAS Daniel Williams, of Macleay-street, Sydney, in the Colony of New South Wales, hath by his Petition humbly represented to me that he is the author or designer of a certain invention or improvement in manufactures, that is to say, of an invention of an "Apparatus for preserving Meat and other perishable substances," which is more particularly described in the specification and the sheet of drawings which are hereunto annexed; and that he, the said Petitioner, hath deposited with the Honorable the Treasurer of the said Colony of New South Wales the sum of Twenty Pounds sterling, for defraying the expense of granting these Letters of Registration, as required by the Act of Council, sixteenth Victoria, number twenty-four; and hath humbly prayed that I would be pleased to grant Letters of Registration, whereby the exclusive enjoyment and advantage of the said invention or improvement might be secured to him for a period of fourteen years: And I, being willing to give encouragement to all inventions and improvements in the arts or manufactures which may be for the public good, and having received a report favourable to the prayer of the said Petition, from competent persons appointed by me to examine and consider the matters stated therein and to report thereon for my information, am pleased, with the advice of the Executive Council, and in exercise of the power and authority given to me by the said Act of Council, to grant, and do by these Letters of Registration grant unto the said Daniel Williams, his executors, administrators, and assigns, the exclusive enjoyment and advantage of the said invention or improvement, for and during the term of fourteen years from the date hereof; to have, hold, and exercise unto the said Daniel Williams, his executors, administrators, and assigns, the exclusive enjoyment and advantage thereof, for and during and unto the full end and term of fourteen years from the date of these presents next and immediately ensuing, and fully to be complete and ended: Provided always, that if the said Daniel Williams shall not, within three days after the granting of these Letters of Registration, register the same in the proper office in the Supreme Court, at Sydney, in the said Colony of New South Wales, then these Letters of Registration, and all advantages whatsoever hereby granted, shall cease and become void.

In witness whereof, I have hereunto set my sign manual, and have caused the present Letters of Registration to be sealed with the seal of the said Colony of New South Wales, at Government House, Sydney, in New South Wales, this twentieth day of February, in the year of our Lord one thousand eight hundred and seventy-nine.

[L.S.] HERCULES ROBINSON.

A.D. 1879. No. 722.

Apparatus for preserving Meat and other perishable substances.

SPECIFICATION.

TO ALL TO WHOM THESE PRESENTS SHALL COME: I, DANIEL WILLIAMS, of Sydney, do hereby declare the nature of my invention and the manner in which the same is to be performed :—

THE nature of my invention is to effect improvements in the means of preserving meat, fish, fruit, malt, and other alimentary substances, either for storage or transport, and consists in using a current of cool dry air, and circulating the same in a close chamber by means of perforated pipes, or a false perforated top and bottom or other appliances, drawing or aspirating the air from the top of the tank or chamber and returning it at the bottom or sides after cooling it, in order that the whole of the chamber may be subjected to its influence. I employ any non-conducting material to make air-tight chamber, and this chamber can be made of any shape, using ordinarily that shape which will accommodate itself most conveniently to the vessel, railway carriage, or other storage receptacle. The air is exhausted from the top of the chamber by means of a fan, bellows, cylinder, or other blowing machine or air-engine, and forced through coils or pipes surrounded by ice or some other cooling medium, or other cooling apparatus wherein it can deposit its moisture, and after being passed through coarse charcoal, returned to the bottom of the chamber, wherein it is distributed by a perforated pipe or pipes, or a perforated false bottom, in a compartively dry and pure state. The moisture in the air will be deposited on the inside of the cooling pipes like frost, which can be conveniently cleared out at periodic intervals by the introduction of the brine or other cooling medium, which will dissolve the deposit and carry it off, to be again pumped into the cooling tank and used over again. After this apparatus has been at work some time, the air will have very little moisture left, and as it will leave the chamber almost as cool as when it entered it, there will be only a small quantity of cold required to make good the consumption. The temperature I find the best to employ is about 33° F. (thirty-three degrees Farenheit), or one degree above the freezing point. The meat should be cooled to this degree before it is stored in the air-tight chamber, which should be packed in such a manner as will permit the air to freely circulate between and around it.

Having thus described the nature of my invention, together with the method or methods I would employ to carry the same into practical operation and effect, I wish it to be distinctly understood that I claim the use of a current of dry air, cooled and purified in the manner set forth, circulating through the interior of an air-tight tank, carriage, chamber, or other receptacle of what kind soever, for the purpose of preserving meat, fish, fruit, grain, or any other perishable substance, or to provide the temperature required for the fermentation of all beer or other fermented liquids.

Dated at Sydney, this seventh day of January, 1879.

DANIEL WILLIAMS.

This is the specification referred to in the annexed Letters of Registration granted to Daniel Williams, this twentieth day of February, A.D. 1879.

HERCULES ROBINSON.

REPORT.

Sydney, 31 January, 1880.

Sir,

The application of Mr. Daniel Williams for Letters of Registration for an "Apparatus for preserving Meat and other perishable substances" having been referred to us, we have examined the specification and drawings accompanying the same, and have now the honor to report that we see no objection to the issue of Letters of Registration as prayed for.

We have, &c.,

J. SMITH.

CHAS. WATT.

The Principal Under Secretary.

[Drawings—one sheet.]

Longitudinal Elevation of Chamber and Apparatus.

Cross section of Chamber

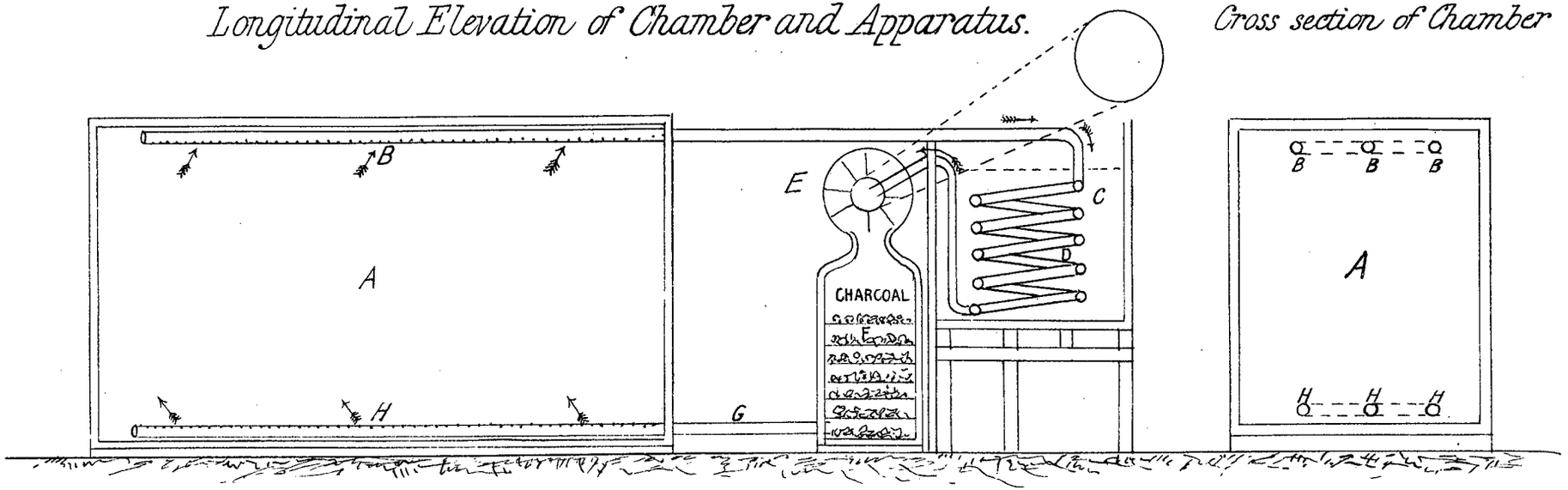

A. Preserving Chamber.
B, B, B, Exhausting Pipes.
C Refrigerating Tank containing the cooling medium, Ice and Salt Brine or other fluid supplied from Ice Machine.
D. Series of Pipes or Coils through which the air passes from B, and supplying the Exhausting Fan
E. The Exhausting Fan, drawing the air from the top of Chamber, and after it has been cooled, driving it through the layers of Charcoal in the vessel F.
F The Charcoal Vessel.
G. The Pipe for supplying the purified cold air to the Chamber A, and communicating with the perforated pipes H inside.

This is the Sheet of Drawings referred to in the annexed Letters of Registration granted to Daniel Williams, this twentieth day of February, A.D. 1879

Hercules Robinson.

(198–)

A.D. 1879, 20*th February.* No. 723.

IMPROVEMENTS IN DRY AIR REFRIGERATING, AND IN APPARATUS THEREFOR.

LETTERS OF REGISTRATION to Kennard Knott, for Improvements in Dry Air Refrigerating and in Apparatus therefor, applicable to railway carriages and ships, store-rooms, and other stationary refrigerators for the transportation and preservation of meat and other perishable articles.

[Registered on the 22nd day of February, 1879, in pursuance of the Act 16 Vic. No. 24.]

BY His Excellency Sir Hercules George Robert Robinson, Knight Grand Cross of the Most Distinguished Order of Saint Michael and Saint George, Governor and Commander-in-Chief of the Colony of New South Wales and its Dependencies, and Vice-Admiral of the same.

TO ALL TO WHOM THESE PRESENTS SHALL COME, greeting:

WHEREAS Kennard Knott, of London, England, hath by his Petition humbly represented to me that he is the author or designer of a certain invention or improvement in manufactures, that is to say, of an invention intituled "Improvements in Dry Air Refrigerating, and in Apparatus therefor, applicable to railway carriages and ships, store-rooms, and other stationary refrigerators for the transportation and preservation of meat and other perishable articles," which is more particularly described in the specification and the sheet of drawings which are hereunto annexed; and that he, the said Petitioner, hath deposited with the Honorable the Treasurer of the said Colony of New South Wales the sum of Twenty Pounds sterling, for defraying the expense of granting these Letters of Registration, as required by the Act of Council, sixteenth Victoria, number twenty-four; and hath humbly prayed that I would be pleased to grant Letters of Registration, whereby the exclusive enjoyment and advantage of the said invention or improvement might be secured to him for a period of fourteen years: And I, being willing to give encouragement to all inventions and improvements in the arts or manufactures which may be for the public good, and having received a report favourable to the prayer of the said Petition, from competent persons appointed by me to examine and consider the matters stated therein and to report thereon for my information, am pleased, with the advice of the Executive Council, and in exercise of the power and authority given to me by the said Act of Council, to grant, and do, by these Letters of Registration, grant unto the said Kennard Knott, his executors, administrators, and assigns, the exclusive enjoyment and advantage of the said invention or improvement, for and during the term of fourteen years from the date hereof; to have, hold, and exercise unto the said Kennard Knott, his executors, administrators, and assigns, the exclusive enjoyment and advantage thereof, for and during and unto the full end and term of fourteen years from the date of these presents next and immediately ensuing, and fully to be complete and ended: Provided always, that if the said Kennard Knott shall not, within three days after the granting of these Letters of Registration, register the same in the proper office in the Supreme Court, at Sydney, in the said Colony of New South Wales, then these Letters of Registration, and all advantages whatsoever hereby granted, shall cease and become void.

In witness whereof, I have hereunto set my sign manual, and have caused the present Letters of Registration to be sealed with the seal of the said Colony of New South Wales, at Government House, Sydney, in New South Wales, this twentieth day of February, in the year of our Lord one thousand eight hundred and seventy-nine.

[L.S.] HERCULES ROBINSON.

Improvements in Dry Air Refrigerating, and in Apparatus therefor.

SPECIFICATION of KENNARD KNOTT, of London, England, for an invention intituled "Improvements in Dry Air Refrigerating and in Apparatus therefor, applicable to railway carriages and ships, store-rooms, and other stationary refrigerators for the transportation and preservation of meat and other perishable articles."

THE object of this invention is improvements in the means and apparatus for the preservation and transportation or storage of meat and other perishable articles, whereby such articles can be kept in a fresh state for a long period and at small cost.

In carrying out my invention I condense all dampness from the air in the apparatus, and produce any desired temperature under or above freezing-point.

But to make my invention better understood, I will proceed to describe the same as applied to a refrigerating railway carriage or car, by reference to the accompanying drawing, in which figure 1 is a side elevation of a refrigerating railway carriage or car constructed according to my invention; figure 2, a longitudinal section; and figure 3, a transverse section of the same.

Similar letters in all the figures represent similar parts.

I surround or line the sides, ends, top, and bottom of the carriage with any suitable non-conducting substance, *a*, and render it air-tight. In the top of the car I construct the refrigerating apparatus, consisting of a chamber or receiver, A D, for containing the required refrigerating agents for producing the desired low temperature.

The said chamber or receiver is constructed of any suitable metal, and is made nearly of the same width and length as the interior of the carriage, and is supported on suitable bearings fixed across the carriage, and is fixed by blocks. A small space, C, is left between the top, ends, and sides of the receiver A and the non-conducting lining *a* of the carriage, for the passage of air, as hereinafter described. The top part D of the receiver serves for the introduction of the refrigerating agents, such as ice, ice and salt, or other suitable refrigerating agents, from the top of the car, which is provided with air-tight closing doors, M, for that purpose. *b b b* are pipes or tubes passing through the receiver or tank A, for the downward passage of the cold air, as hereinafter described; *c c*, similar pipes passing in a slightly oblique direction from side to side of the receiver or tank A. On the under side of the said receiver I fix a series of gutters, E, so arranged as to collect the condensed moisture and carry it to a transverse gutter, F, placed at the end of the carriage (or a gutter may be placed at both ends of the carriage). These gutters E are of wood or other non-conducting material, lined on their upper sides with zinc or other suitable metal. G is a pipe carrying off the condensed moisture from the said gutter F, and discharging it outside the carriage, the said pipe being provided with a syphon, H, or other suitable arrangement, at its lower end, to prevent the inlet of the external air. From the bottom of the receiver A passes a pipe, I, provided with a stop-cock, J, and communicating with the coil of pipes K passing round the inside of the carriage as shown, the lower end of the said coil passing out through the bottom of the carriage, where it is provided with a stop-cock, L. Figure 5 is an enlarged view of the gutters E.

In some cases I cover these coils with similar gutters to those shown at E, but I place them vertically, as shown at E^1, figure 4, and they serve to collect the moisture which may arise from the melting of the rime which may form on the coil or otherwise, such moisture being carried away by the gutter N and wastepipe O.

In a refrigerating car or carriage of this construction, the meat or other perishable articles to be preserved and transported or stored is or are hung or packed in any suitable manner, and the refrigerating agents are introduced into the receiver A D, through the doors M, in sufficient quantities to produce the degree of temperature required; the doors are then closed air-tight. The air in the car will in a short time be brought to an even temperature, as the warmer portion of the air will pass up through the spaces C to the top of the receiver A, and will become cool and descend through the tubes *b b b* and *c c*, and any moisture which it may contain will be condensed in these tubes and on the outside surface of the tank, and be collected in the gutters E, the construction of the said gutters at the same time allowing the cold air to pass downwards, as shown by the arrows. The moisture collected in the said gutters (which are placed at a suitable fall) will run into the transverse gutter F, whence it will be discharged through he waste-pipe G, outside the carriage.

When the refrigerating agents in the receiver A D shall have become partially exhausted, the stop-cock J is turned on, and the partially exhausted agents will pass into the coil K, and when thoroughly exhausted they are discharged through the stop-cock L. The moisture condensed on the coil K will be collected in the gutters E^1, figure 4, and be carried away by the gutter N and waste-pipe O. In the meantime, the stop-cock J having been turned off, the receiver A has been filled with a fresh supply of refrigerating agents. By this arrangement I am enabled to fully utilize the refrigerating agents. In some cases, particularly for store-rooms and domestic refrigerators, the coil K is not required, the exhausted refrigerating liquid is then discharged through a pipe suitably arranged for this purpose. I would here observe that, for the sake of simplicity, the pipes *c* and *b* are not shown in figure 2.

From the preceding description it will be seen that, in a refrigerating carriage or car constructed according to my invention, there will be a circulation of the same air, which will be constantly kept in a dry state, for any moisture therein or which may form therein from its contact with the meat or other articles in the carriage, will be condensed and fall into the gutters E and F and E^1 and N, as hereinbefore described, and be discharged outside the carriage.

For seagoing purposes the refrigerating apparatus is placed under the deck, and is supported by cross beams and uprights, which uprights and beams may be provided with rails and hooks on which the meat may be hung. For domestic refrigerators the construction is substantially the same as that described for the refrigerator car.

When ice only is employed as the refrigerating agent the tank requires to be ventilated, and for this purpose the tank is provided with suitable valves.

Having

Having thus described my said invention, and the best means I am acquainted with for carrying the same into effect, I wish it to be understood that I do not confine myself to the precise details herein laid down and shown in the drawing, as the same may be varied without departing from the peculiar character of my invention; but what I do claim is,—

Firstly—The general arrangement and construction of a refrigerator car or store-room for the transportation or preservation of meat and other perishable articles, substantially as hereinbefore described and represented in the accompanying drawing.

Secondly—I claim a refrigerator car or store-room, in which the required low temperature is produced from any suitable agents or any known process for producing cold, enclosed within an air-tight tank or receiver, constructed as described, and built within the car or store-room, which is made air-tight and non-conducting, whereby the air in the said car or store-room is cooled without coming into contact with the refrigerating agents, as hereinbefore described.

Thirdly—In a refrigerating car or store-room constructed as hereinbefore described, I claim the employment of gutters and waste-pipe for collecting and discharging the moisture from the rime which forms on the surface of the tank and pipes passing through the same, so that the air in the car or store-room is kept constantly dry, as hereinbefore described.

Fourthly—I claim in a refrigerating car or store-room, constructed as hereinbefore described, the coil of pipes in connection with the tank, for utilizing to the full extent the refrigerating agents employed, as hereinbefore described.

Fifthly—I claim the vertically placed gutters for collecting and discharging the moisture arising from the rime which forms on the said coil, as hereinbefore described.

In witness whereof, I, the said Kennard Knott, have hereto set my hand and seal, this twenty-second day of November, in the year of our Lord one thousand eight hundred and seventy-eight.

KENNARD KNOTT.

This is the specification referred to in the annexed Letters of Registration granted to Kennard Knott, this twentieth day of February, A.D. 1879.

HERCULES ROBINSON.

REPORT.

Sir, Sydney, 31 January, 1879.

The application of Mr. Kennard Knott for Letters of Registration for "Improvements in Dry Air Refrigerating and in Apparatus therefor," having been referred to us, we have examined the specification and drawings accompanying the same, and have now the honor to report that we see no objection to the issue of Letters of Registration as prayed for.

We have, &c.,
J. SMITH.
CHAS. WATT.

The Principal Under Secretary.

[Drawings—one sheet.]

Fig:1.

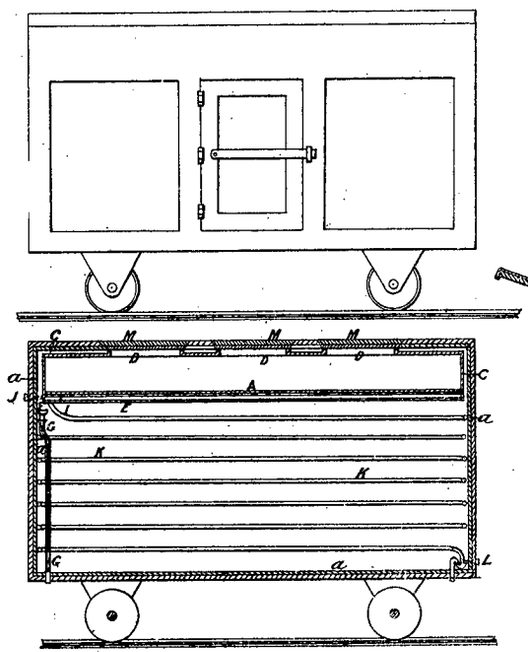

Fig:2.

Fig:3.

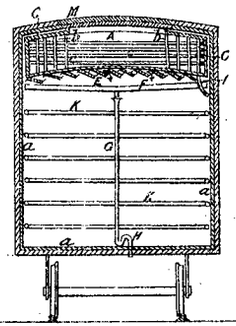

Fig:5.



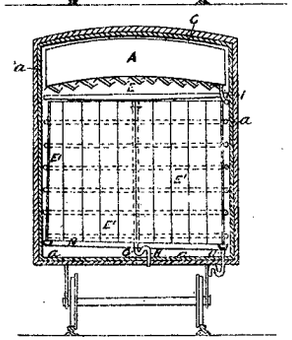

Fig:4.

This is the Sheet of Drawings referred to in the annexed Letters of Registration granted to Kennard Knott, this twentieth day of February A.D.1879.

Hercules Robinson.

Kennard Knott.

Sig:198.

PHOTO-LITHOGRAPHED AT THE GOVT. PRINTING OFFICE, SYDNEY, NEW SOUTH WALES.

A.D. 1879, 20*th February*. No. 724.

ATOMIC STEAM COAL GAS.

LETTERS OF REGISTRATION to James Crutchett, for an Invention for the manufacture of Atomic Steam Coal Gas.

[Registered on the 22nd day of February, 1879, in pursuance of the Act 16 Vic. No. 24.]

BY His Excellency Sir Hercules George Robert Robinson, Knight Grand Cross of the Most Distinguished Order of Saint Michael and Saint George, Governor and Commander-in-Chief of the Colony of New South Wales and its Dependencies, and Vice-Admiral of the same.

TO ALL TO WHOM THESE PRESENTS SHALL COME, greeting:

WHEREAS James Crutchett, of Stroud, Gloucestershire, England, now a domiciled resident of Washington City, United States of America, hath by his Petition humbly represented to me that he is the author or designer of a certain invention or improvement in manufactures, that is to say, of an invention for the manufacture of "Atomic Steam Coal Gas," which is more particularly described in the specification which is hereunto annexed; and that he, the said Petitioner, had deposited with the Honorable the Treasurer of the said Colony of New South Wales the sum of Twenty Pounds sterling, for defraying the expense of granting these Letters of Registration, as required by the Act of Council, sixteenth Victoria, number twenty-four; and hath humbly prayed that I would be pleased to grant Letters of Registration, whereby the exclusive enjoyment and advantage of the said invention or improvement might be secured to him for a period of fourteen years: And I, being willing to give encouragement to all inventions and improvements in the arts or manufactures which may be for the public good, and having received a report favourable to the prayer of the said Petition, from competent persons appointed by me to examine and consider the matters stated therein and to report thereon for my information, am pleased, with the advice of the Executive Council, and in exercise of the power and authority given to me by the said Act of Council, to grant, and do by these Letters of Registration grant unto the said James Crutchett, his executors, administrators, and assigns, the exclusive enjoyment and advantage of the said invention or improvement, for and during the term of fourteen years from the date hereof; to have, hold, and exercise unto the said James Crutchett, his executors, administrators, and assigns, the exclusive enjoyment and advantage thereof, for and during and unto the full end and term of fourteen years from the date of these presents next and immediately ensuing and fully to be complete and ended: Provided always, that if the said James Crutchett shall not, within three days after the granting of these Letters of Registration, register the same in the proper office in the Supreme Court, at Sydney, in the said Colony of New South Wales, then these Letters of Registration, and all advantages whatsoever hereby granted, shall cease and become void.

In witness whereof, I have hereunto set my sign manual, and have caused the present Letters of Registration to be sealed with the seal of the said Colony of New South Wales, at Government House, Sydney, in New South Wales, this twentieth day of February, in the year of our Lord one thousand eight hundred and seventy-nine.

[L.S.] HERCULES ROBINSON.

Atomic Steam Coal Gas.

SPECIFICATION.

To all to whom these presents shall come, I, JAMES CRUTCHETT, of Stroud, Gloucestershire, in that part of the United Kingdom called England, send greeting: Whereas I am desirous of obtaining Royal Letters Patent for securing unto me Her Majesty's Special License that I, my executors, administrators, and assigns, and such others as I or they should at any time agree with, and no others, should and lawfully might from time to time and at all times during the term of fourteen years (to be computed from the day on which this instrument shall be left at the office of the Registrar-General), make, use, exercise, and vend within the Colony of New South Wales and its dependencies an invention known as the "Atomic Steam Coal Gas," being a new and improved mode of manufacturing or generating gas for illumination, heating, and other purposes, thereby producing said gases of a rich and pure quality for illumination, more powerful for the uses of heat power and ventilation, clean and easy of manufacture, and at much less cost than heretofore; and in order to obtain the said Letters Patent I must, by an instrument in writing under my hand and seal, particularly describe and ascertain the nature of the said invention and in what manner the same is to be performed, and must also enter into the covenant hereinafter contained: Now know ye that the nature of the said invention, and the manner in which the same is to be performed, is particularly described and ascertained in and by the following statement, that is to say:—

It is an invention relating to the manufacture of gas for lighting, heating, and other purposes, from coal oil and other suitable materials, as follows:—

I take coal of fine screening or other carbonaceous material and reduce it to small particles or powder, by means of rollers, stones, or friction, by any suitable mechanical means, which powdered coal or other carbonaceous material I inject, in small quantities, at regulated intervals, or by small streams or currents, into the retort, oven, or furnace (the same having been previously charged with coal or other suitable fuel for being highly heated) by means of a jet of steam, compressed air, gas, or by suitable mechanism of hoppers, screws, and springs, so arranged as to throw it into the furnace at the front, end, centre, or top of the heated fuel or material in the said furnace or other suitable apparatus, in proportion as said coal-dust or other carbonaceous material is fed from a suitable hopper or other vessel.

The pulverized coal may, if desired, be introduced into the said furnace or oven in combination with petroleum, naphtha, or other oils, together with sawdust or other carbonaceous materials, steam, gas, air, or other things, to become gasified and carbonized in the interior.

In carrying out my improvements in the manufacture of gas for lighting and heating purposes from coal and other material, I improve on the present method, which is this:—

Coal of the best and costly kind is used, taken in bulk, lump and slack together. Several hundredweight is introduced as a charge into the retort, which is then tightly closed, and so remains from four to eight hours after every charge. During that time the vapours and oils are partly distilled into tar at varying temperatures up to 900 degrees, when portions of the same are converted into illuminating gas, naphtha, ammonia, and other results, until a temperature of nearly 2,000 degrees is generated, at which period most of the illuminating gases have been expelled, mixed with the impure gases which require lime and other purifying to be fit for use. The coal used has during these operations been separated from its gaseous parts and converted into coke, tar, or other residuum.

Thus each charge put into the retort and so operated upon converts the coal into about nine-tenths of coke, tar, and other residuum, and one-tenth of coal gas only. Therefore, the bulk of carbon in the coal is turned into coke and cannot be made into gas by this the usual process, not having hydrogen gas to absorb it.

My invention makes improvements on the said usual process as follows:—

I charge the cupola or furnace with lump coal of such kind as not to form many clinkers. I arrange an open space in the centre of the coal fire by means of a kind of muffle formed of pieces of fire-clay, to make a concave crown, supported by brackets of the same material (or a projecting ledge of the furnace lining may be made to support such crown), and I keep an opening space under the coals as fed from the front or top of the cupola or furnace. The fire is then to be lighted, and by the use of an air-blast the fuel soon gets heated to a higher degree than mere metal retorts would stand, the smoke flue being closed and connection with hydraulic gas main opened. The material now to be injected may be coal-dust, the screened refuse of mines, passed between rollers or ground into dust by stones or other suitable means. It is injected into the centre of the fire as well as on to the top of same, in as many layers and such quantity as practicable. The injection may be in small charges or in continuous small currents, by means of steam, gas, air, springs, screw, or other proper arrangements as engineers may elect. At the time the carbonaceous dust oils or other substitute are being injected a current of hot steam is supplied to the body of heated fuel, preferably at the lower portion of the fire, by means of small jets around, through, or between the courses of firebrick or soapstone lining, suitably arranged to penetrate between the particles of red hot fuel or fuel and fireclay balls, or other desirable combined material. By such means the primary elements that had formed water and steam by the intense heat become adapted with strong affinity for absorbing or combining with the dust. Particles of carbon being injected into the highly heated furnace also become infinitesimally subdivided into smaller particles and forms, being in this state best adapted to form and mix together with the elements which previously formed steam, being pure oxygen and hydrogen, but by being brought into the proximity of infinitesimal small atoms of carbon, and all at several thousand degrees of heat, the three elements become thoroughly carbonized illuminating and heating gases that require little or no purification according to its uses, as the bulk of gas is pure oxygen and hydrogen, containing no sulphur or ammonia.

By these operations, which I call the "Atomic Steam Coal Gas" process, the whole of the carbon of the refuse coal, whether hard coal or soft, bituminous or anthracite, or the carbon of any other material supplied by this process, become allied to and combined with the pure elements which form water. Of itself of high importance as well as improvement in this connection, is the well-known fact that it requires but little carbon to make hydrogen gas illuminating; consequently, as no coke is made by this new

new process, nor tar either, if properly carried through, one ton of coal is thereby made into an incredible amount of carburetted hydrogen combined with steam, resulting in a very low cost of the gas compared with that incurred by the old process.

If a very high illuminating power be wanted, coal oil, naphtha, or other carbonaceous material, can be easily run into or be injected into the furnaces, which readily vapourize and mix with the oil gas; but little coal oil, however, is desirable, on account of the comparative cost and the tendency to clog the burner if much oil be used.

My claims for novelties and other claims are—

First—The manufacture of gas for lighting power and heating purposes from pulverized or fine coal, coal-dust, or other carbonaceous materials, injected into retorts, furnaces, or ovens in small quantities, or by separate successive injections or in small continuous currents, as before described.

Secondly—The injection into retorts, furnaces, cupolas, or suitable ovens of pulverized, powdered, or small coal, sawdust, oils, spirits, or carbonaceous materials, by means of steam supplied thereto and therewith in separate charges or in continuous currents, as above detailed.

Thirdly—The injection of proper carbonaceous materials as aforesaid for the manufacturing gas into retorts, ovens, furnaces, or heated chambers, by separate successive injections or currents by means of compressed atmospheric air or suction, compressed gas, springs, screws, hoppers, or other mechanical means, as heretofore described, whether the interior of the chambers be under a pressure or vacuum.

Fourthly—The injection of steam into the body of the incandescent coal in combination with the coal-dust or other carbonaceous material in the manner described, so that the steam or its constituents absorb the carbon in the manner described.

Fifthly—The system of injecting or supplying said dust, coal, or other materials described, in one, two, or more places or spaces inside the body of heated coals as well as on the surface thereof.

Sixthly—The erection or contrivance of the furnace or other heating chamber, so that there may be arranged a body of round fireclay balls, bats, bricks, or other suitable materials, to be highly heated and arranged to receive the mixed gases as they pass from the incandescent chamber to the hydraulic main.

Seventhly—The mixture of coal oil, naphtha, or other carbonaceous liquids and materials with coal-dust and other similar atomic carbonaceous materials for the manufacture of gas in the manner described for illuminating, heating, and power uses, in the manner explained and set forth, and in the various ways that the same may and can be arranged to effect the same.

And I do hereby, for myself, my heirs, executors, and administrators, covenant with Her Majesty, Her Heirs and Successors, that I believe the said invention to be a new invention as to the public use and exercise thereof, and that I do not know or believe that any other person than myself is the true and first inventor of the said invention, and that I will not deposit these presents at the office of the Registrar General with any such knowledge or belief as last aforesaid.

In witness whereof, I have hereunto set my hand and seal, this day of , one thousand eight hundred and seventy-eight.

JAMES CRUTCHETT,
By his Attorney, JACOB PITMAN.

Signed, sealed, and delivered in the presence of—
SAM. T. WEBB,
Mount Gambier, South Australia.

This is the specification referred to in the annexed Letters of Registration granted to James Crutchett, this twentieth day of February, A.D. 1879.

HERCULES ROBINSON.

REPORT.

Sir, Sydney, 28 January, 1879.

The application of Mr. James Crutchett for Letters of Registration for an invention entitled "Atomic Steam Coal Gas" having been referred to us, we have examined the specification accompanying the same, and have now the honor to report that we see no objection to the issue of Letters of Registration as prayed for.

We have, &c.,
J. SMITH.
E. C. CRACKNELL.

The Principal Under Secretary.

A.D. 1879, 20*th February*. No. 725.

NON-ACTINIC PROCESS OF WRITING AND PRINTING.

LETTERS OF REGISTRATION to Samuel Thompson and Thomas Wilson Garlick, for a Non-actinic Process of Writing and Printing.

[Registered on the 22nd day of February, 1879, in pursuance of the Act 16 Vic. No. 24.]

BY His Excellency Sir Hercules George Robert Robinson, Knight Grand Cross of the Most Distinguished Order of Saint Michael and Saint George, Governor and Commander-in-Chief of the Colony of New South Wales and its Dependencies, and Vice-Admiral of the same.

TO ALL TO WHOM THESE PRESENTS SHALL COME, greeting:

WHEREAS Samuel Thompson, of Sydney, in the Colony of New South Wales, sharebroker, and Thomas Wilson Garlick, of Sydney aforesaid, mining agent, have by their Petition humbly represented to me that they are the authors or designers of a certain invention or improvement in manufactures, that is to say, of an invention called the "Non-actinic Process of Writing and Printing," which is more particularly described in the specification which is hereunto annexed; and that they, the said Petitioners, have deposited with the Honorable the Treasurer of the said Colony of New South Wales the sum of Twenty Pounds sterling, for defraying the expense of granting these Letters of Registration, as required by the Act of Council, sixteenth Victoria, number twenty-four; and have humbly prayed that I would be pleased to grant Letters of Registration, whereby the exclusive enjoyment and advantage of the said invention or improvement might be secured to them for a period of fourteen years: And I, being willing to give encouragement to all inventions and improvements in the arts or manufactures which may be for the public good, and having received a report favourable to the prayer of the said Petition, from competent persons appointed by me to examine and consider the matters stated therein and to report thereon for my information, am pleased, with the advice of the Executive Council, and in exercise of the power and authority given to me by the said Act of Council, to grant, and do by these Letters of Registration grant unto the said Samuel Thompson and Thomas Wilson Garlick, their executors, administrators, and assigns, the exclusive enjoyment and advantage of the said invention or improvement, for and during the term of fourteen years from the date hereof; to have, hold, and exercise unto the said Samuel Thompson and Thomas Wilson Garlick, their executors, administrators, and assigns, the exclusive enjoyment and advantage thereof, for and during and unto the full end and term of fourteen years from the date of these presents next and immediately ensuing, and fully to be complete and ended: Provided always, that if the said Samuel Thompson and Thomas Wilson Garlick shall not, within three days after the granting of these Letters of Registration, register the same in the proper office in the Supreme Court, at Sydney, in the said Colony of New South Wales, then these Letters of Registration, and all advantages whatsoever hereby granted, shall cease and become void.

In witness whereof, I have hereunto set my sign manual, and have caused the present Letters of Registration to be sealed with the seal of the said Colony of New South Wales, at Government House, Sydney, in New South Wales, this twentieth day of February, in the year of our Lord one thousand eight hundred and seventy-nine.

[L.S. HERCULES ROBINSON.

Non-actinic Process of Writing and Printing.

SPECIFICATION of the Non-actinic Process of Writing and Printing.

We claim the invention for the skilful application of the admixture of all the colours in the spectrum and the blending of such colours to produce all the intermediate tints of the same, and the application of them to all paper and other printing or writing material, so that they will form pleasing contrasts to the eye, but when tested by photography will be non-photographic, *i.e.*, produce no image.

We claim the invention for the skilful blending and application of those colours with black and white, and the application of the same to all paper and other printing or writing material, so that when tested by photography will be non-photographic, *i.e.*, produce no image.

To produce a non-photographic print, we use in

Section No. 1.—A white ground, and print upon it a violet, yellow, pink, blue, and green. We take any one of these colours as a ground and print upon it one or all of the colours, or any of their intermediate tints in this section, which will produce a non-photographic print.

Section No. 2.—We take a white ground, and print upon it yellow, red, blue, green, violet, and indigo. We take any one of these colours as a ground, and print upon it one or all of the colours or any of their intermediate tints in this section, which will produce a non-photographic print.

Section No. 3.—We take a white ground, and print upon it blue, yellow, red, green, indigo, and violet. We take any one of these colours as a ground, and print upon it one or all of the colours or any of their intermediate tints in this section, which will produce a non-photographic print.

Section No. 4.—We take a green ground, and print upon it orange, yellow, red, blue, and black. We take any one of these colours as a ground, and print upon it one or all of the colours or any of their intermediate tints in this section, which will produce a non-photographic print.

Section No. 5.—We take a yellow ground, and print upon it red, green, orange, blue, indigo, and black. We take any one of these colours as a ground, and print upon it one or all of the colours or any of their intermediate tints in this section, which will produce a non-photographic print.

Section No. 6.—We take a red ground, and print upon it violet, indigo, blue, green, yellow, black, and white. We take any one of these colours as a ground, and print upon it one or all of the colours or any of their intermediate tints in this section, which will produce a non-photographic print.

Section No. 7.—We take an orange ground, and print upon it red, indigo, blue, green, yellow, and black; we take any one of these colours as a ground, and print upon it one or all of the colours or any of their intermediate tints in this section, which will produce a non-photographic Print.

We claim the use of all the colours and tints of colours contained within the foregoing sections for the purpose of dyeing or staining paper or other printing or writing material for our non-actinic process.

We specially claim the printing of bank notes, bills of exchange, bank drafts, cheques, debentures, stock warrants, dockets, letters of credit, receipts, bills of lading, wills, deeds, postage and duty stamps, promissory notes, and all other documents of value by our non-actinic process, so that when tested by photography they will be non-photographic, *i.e.*, produce no image.

We claim the discovery of the blending of the above-named colours and all their intermediate tints, so far as the application of them to the arts of printing and writing, so as to produce a pleasing contrast to the eye; but when tested by photography they will be non-photographic, *i.e.*, produce no image.

SAML. THOMPSON.
T. W. GARLICK.

This is the specification referred to in the annexed Letters of Registration granted to Samuel Thompson and Thomas Wilson Garlick, this twentieth day of February, A.D. 1879.

HERCULES ROBINSON.

REPORT.

Sydney, 31 January, 1879.

Sir,

The application of Messrs. S. Thompson and T. W. Garlick for Letters of Registration for a "Non-actinic Process of Writing and Printing" having been referred to us, we have examined the specification accompanying the same, and have also conferred with the applicants and inspected samples of their process, and have now the honor to report that we see no objection to the issue of Letters of Registration as prayed for.

We have, &c.,
J. SMITH.
CHAS. WATT.

The Principal Under Secretary.

A.D. 1879, 13*th March.* No. 726.

IMPROVEMENTS IN STEAM BOILERS.

LETTERS OF REGISTRATION to William Menzies and Charles Blagburn, for Improvements in Steam Boilers.

[Registered on the 14th day of March, 1879, in pursuance of the Act 16 Vic. No. 24.]

BY His Excellency Sir Hercules George Robert Robinson, Knight Grand Cross of the Most Distinguished Order of Saint Michael and Saint George, Governor and Commander-in-Chief of the Colony of New South Wales and its Dependencies, and Vice-Admiral of the same.

TO ALL TO WHOM THESE PRESENTS SHALL COME, greeting:

WHEREAS William Menzies and Charles Blagburn, both of Newcastle-on-Tyne, in the Kingdom of England, engineers, have by their Petition humbly represented to me that they are the authors or designers of a certain invention or improvement in manufactures, that is to say, of an invention for "Improvements in Steam Boilers," which is more particularly described in the specification and the sheet of drawings which are hereunto annexed; and that they, the said Petitioners, have deposited with the Honorable the Treasurer of the said Colony of New South Wales the sum of Twenty Pounds sterling, for defraying the expense of granting these Letters of Registration, as required by the Act of Council, sixteenth Victoria, number twenty-four; and have humbly prayed that I would be pleased to grant Letters of Registration, whereby the exclusive enjoyment and advantage of the said invention or improvement might be secured to them for a period of fourteen years: And I, being willing to give encouragement to all inventions and improvements in the arts or manufactures which may be for the public good, and having received a report favourable to the prayer of the said Petition, from competent persons appointed by me to examine and consider the matters stated therein and to report thereon for my information, am pleased, with the advice of the Executive Council, and in exercise of the power and authority given to me by the said Act of Council, to grant, and do by these Letters of Registration grant unto the said William Menzies and Charles Blagburn, their executors, administrators, and assigns, the exclusive enjoyment and advantage of the said invention or improvement, for and during the term of fourteen years from the date hereof; to have, hold, and exercise unto the said William Menzies and Charles Blagburn, their executors, administrators, and assigns, the exclusive enjoyment and advantage thereof, for and during and unto the full end and term of fourteen years from the date of these presents next and immediately ensuing, and fully to be complete and ended: Provided always, that if the said William Menzies and Charles Blagburn shall not, within three days after the granting of these Letters of Registration, register the same in the proper office in the Supreme Court, at Sydney, in the said Colony of New South Wales, then these Letters of Registration, and all advantages whatsoever hereby granted, shall cease and become void.

In witness whereof, I have hereunto set my sign manual, and have caused the present Letters of Registration to be sealed with the seal of the said Colony of New South Wales, at Government House, Sydney, in New South Wales, this thirteenth day of March, in the year of our Lord one thousand eight hundred and seventy-nine.

[L.S.] HERCULES ROBINSON.

Improvements in Steam Boilers.

SPECIFICATION of WILLIAM MENZIES and CHARLES BLAGBURN, both of Newcastle-on-Tyne, in the Kingdom of England, engineers, for Improvements in Steam Boilers.

OUR said invention relates more particularly to marine boilers, and consists of improvements having for their object promoting the circulation of the water in the boiler, and thereby equalizing the heat and preventing the chemical or galvanic action which attacks the under side of the flues and the interior of the bottom of the boiler, and also the prevention of priming and increasing the evaporative efficiency of the boiler.

In carrying out our said invention, as applied for example to a double-flued multitubular marine boiler, we arrange between the two flues and the two sets of horizontal fire tubes a passage or series of passages in a vertical plane, and opening at their upper ends, which are situate at or about the level of the top row of horizontal fire flue, into the water space above, and at their lower ends into the water space below. These passages may consist of tubes of an oval, rectangular, or other elongated section, or of a cluster or series of tubes of a round or other section having an equivalent aggregate area, or the passages may be formed of double plates; but in all cases the passages terminate at their upper extremity at about (but below) the water-level, and at their lower extremity below the level of the fire-bars.

In the case of triple-flued boilers, a water-circulating passage or series of passages may be employed between each outer flue and the central flue, and additional passages may be arranged around the sides of the boiler at its interior, if desired.

And in order that our said invention may be fully understood, we shall now proceed more particularly to describe the same, and for that purpose shall refer to the several figures on the annexed sheet of drawings, the same letters of reference indicating corresponding parts in all the figures.

Figures 1 and 2 of our drawings represent respectively a longitudinal and transverse section of a double-flued multitubular boiler, with two vertical circulating tubes of an elongated section arranged between the flues. Figure 3 represents a similar view to figure 1, but with one of the circulating tubes shown inclined. Figure 4 represents a transverse section of a triple-flued multitubular boiler, with water-circulating tubes arranged both between the flues and on the outer sides of the outer flues at the sides of the boiler. Figures 5 and 6 represent a similar boiler to that shown in figures 1 and 2, but with double plates substituted for tubes.

A is the outer shell of the boiler, B B are the flues, C C are the fire-tubes, D D are the water-circulating passages, terminating at their upper ends at about the level of the water in the boiler, but below the same, and at their lower ends below the level *a* of the fire-bars. In the arrangements illustrated in figures 1, 2, 3, and 4, the passages consist of tubes of an elongated section, for which a series of tubes of a round or other section, having an equivalent aggregate sectional area, may be substituted.

In the modification shown in figures 5 and 6 double plates are employed, extending from the front of the boiler at *b*, nearly to the flame-box E.

In all cases, however, we prefer to make the passages bell-mouthed, or expanded at the upper ends, as shown at *c*.

When the invention is applied to boilers with external furnaces, the lower ends of the water-circulating tubes (if tubes are employed) may be fitted with an inverted hood which, whilst admitting of the egress of water, will form a trap for preventing the entrance of steam. The tubes or plates are made in convenient sections, so as to admit of their being introduced through the ordinary man-hole and subsequently bolted together.

By means of our said invention a partial division of the water space is obtained, so as to prevent the steam generated on the furnace-crowns and lower fire-tubes from obstructing the free passage of the water to the bottom of the boiler.

The water is thus maintained in circulation, that is to say, currents are constantly passing from the upper part of the boiler down the water tubes or passages D to the lower part of the boiler, the hot water descending after having parted with its complement of steam, and the currents thence return through the main body of water in the boiler, as indicated by the arrows, to the upper part, and then again pass down the water tubes or passages D, and then again return to the upper part, and so on in succession.

The boiler shell consequently is maintained throughout at a uniform temperature, whereby the chemical or galvanic action which corrodes and pits the internal surface of marine boilers under the fire-grate level is obviated; by reason moreover of the constant circulation the evaporative efficiency of the boiler is increased, priming is also prevented, a clear passage being provided for the water downwards after it has parted with its complement of steam. The apparatus is self-contained, and its action is automatic and continuous, it being maintained without any attention so long as the fires are kept up, in lieu of the circulation ceasing immediately the steam is raised, as is the case where donkey-engines and other ordinary external auxiliary apparatus are employed for the purpose.

Having now described and particularly ascertained the nature of our said invention and the manner in which the same is or may be used or carried into effect, we would observe, in conclusion, that what we consider to be novel and original, and therefore claim as the invention is—

The application and use to and in steam boilers of water-circulating passages or tubes of an elongated section, or of a round or other section, and employed in clusters or series so as to obtain an equivalent aggregate sectional area, such passages or tubes extending from about the level of the water in the boiler, but below the same, to any convenient point below the level of the fire-bars, as and for the purposes hereinbefore described.

In witness whereof, we, the said William Menzies and Charles Blagburn, have to this our specification set our hands and seals, this twenty-eighth day of November, one thousand eight hundred and seventy-eight.

WILLIAM MENZIES.
CHARLES BLAGBURN.

Signed and sealed in the presence of—
JOHN J. WALSH, 6, St. Thomas'-terrace, Newcastle-on-Tyne.
JOSEPH W. WAKINSHAW, Vernon-terrace, Gateshead.

This

Improvements in Steam Boilers.

This is the specification referred to in the annexed Letters of Registration granted to William Menzies and Charles Blagburn, this thirteenth day of March, A.D. 1879.

HERCULES ROBINSON.

REPORT.

Sir, Sydney, 17 February, 1879.

In reply to your blank cover communication of the 5th instant, No. 854, transmitting Messrs. William Menzies and Charles Blagburn's application for Letters of Registration of an invention for "Improvements in Steam Boilers," we do ourselves the honor to report that we see no objection to the issue of Letters of Registration, in accordance with Messrs. Menzies and Blagburn's Petition, specification, drawings, and claim.

We have, &c.,
GOTHER K. MANN.
H. BRODERICK.

The Principal Under Secretary.

[Drawings—one sheet.]

No. 727.

[Assignment of No. 629. See page 177 of Return of 3 March, 1881.]

No. 728.

[Assignment of No. 700. See Letters of Registration for 1878, page 129.]

No. 729.

[Assignment of No. 387. See page 131 of Return of 9 July, 1875.]

[No. 730 missing.]

Fig. 1.

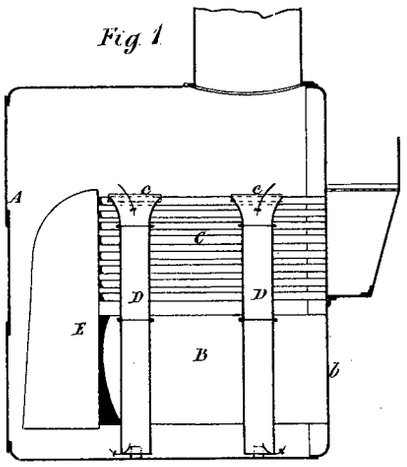

Fig. 2.

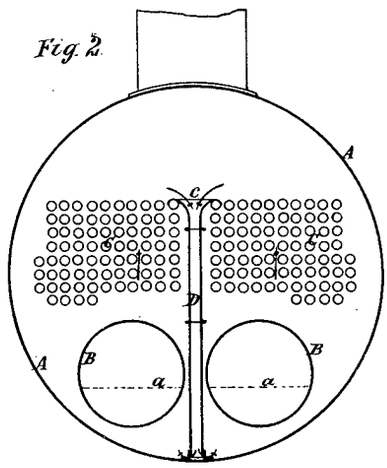

Fig. 3.

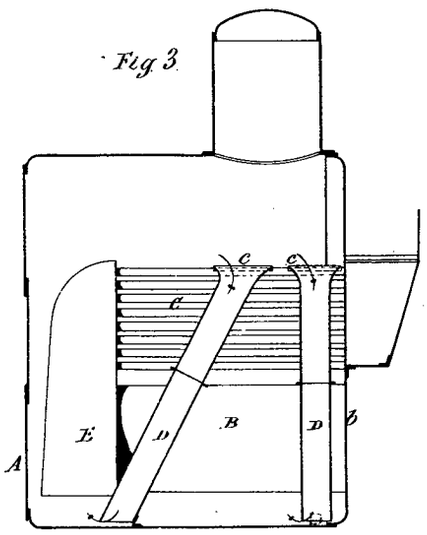

Fig. 4.

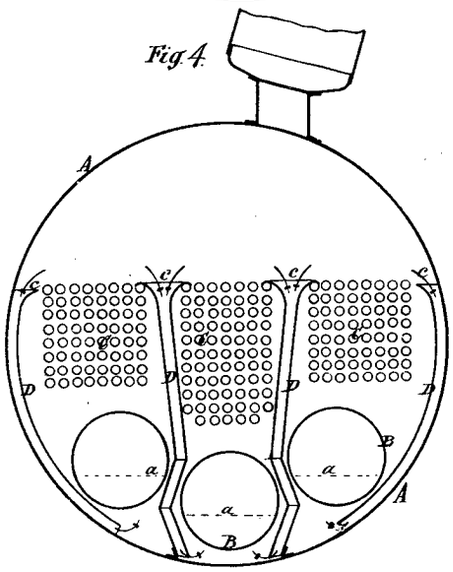

Fig. 5.

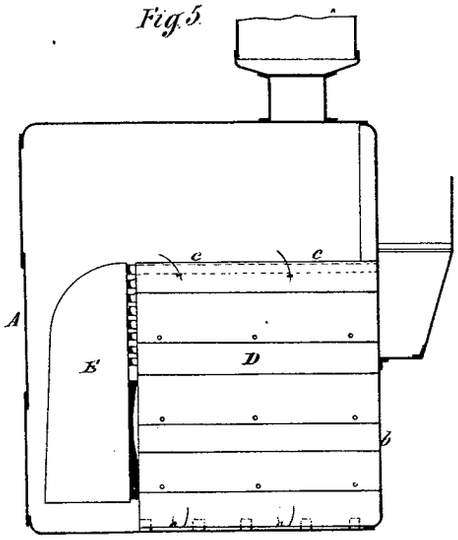

Fig. 6.

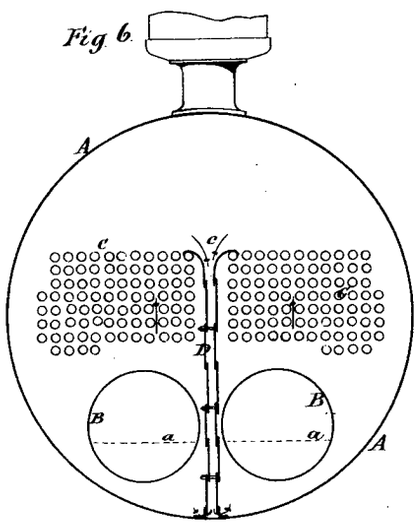

This is the Sheet of Drawings referred to in the annexed Letters of Registration granted to William Mengies and Charles Blagborn this thirteenth Day of March A.D. 1879

(Sig: 198-)

"Hercules Robinson"

PHOTO-LITHOGRAPHED AT THE GOVT. PRINTING OFFICE, SYDNEY, NEW SOUTH WALES.

A.D. 1879, 21*st April*. No. 731.

SELF-ACTING GATE.

LETTERS OF REGISTRATION to William Lockhart Morton, for a Self-acting Gate.

[Registered on the 22nd day of April, 1879, in pursuance of the Act 16 Vic. No. 24.]

BY HIS EXCELLENCY SIR ALFRED STEPHEN, Knight Commander of the Most Distinguished Order of Saint Michael and Saint George, and a Companion of the Most Honorable Order of the Bath, Lieutenant-Governor of New South Wales.

TO ALL TO WHOM THESE PRESENTS SHALL COME, greeting:

WHEREAS WILLIAM LOCKHART MORTON, of South Yarra, in the Colony of Victoria, gentleman, hath by his Petition humbly represented to me that he is the author or designer of a certain invention or improvement in manufactures, that is to say, of an invention of a "Self-acting Gate, which can be opened and shut without dismounting or alighting" which is more particularly described in the specification and the sheet of drawings which are hereunto annexed; and that he, the said Petitioner, hath deposited with the Honorable the Treasurer of the said Colony of New South Wales the sum of Twenty Pounds sterling, for defraying the expense of granting these Letters of Registration, as required by the Act of Council, sixteenth Victoria, number twenty-four; and hath humbly prayed that I would be pleased to grant Letters of Registration, whereby the exclusive enjoyment and advantage of the said invention or improvement might be secured to him for a period of fourteen years: And I, being willing to give encouragement to all inventions and improvements in the arts or manufactures which may be for the public good, and having received a report favourable to the prayer of the said Petition, from competent persons appointed by me to examine and consider the matters stated therein and to report thereon for my information, am pleased, with the advice of the Executive Council, and in exercise of the power and authority given to me by the said Act of Council, to grant, and do by these Letters of Registration grant unto the said William Lockhart Morton, his executors, administrators, and assigns, the exclusive enjoyment and advantage of the said invention or improvement, for and during the term of fourteen years from the date hereof; to have, hold, and exercise unto the said William Lockhart Morton, his executors, administrators, and assigns, the exclusive enjoyment and advantage thereof, for and during and unto the full end and term of fourteen years from the date of these presents next and immediately ensuing, and fully to be complete and ended: Provided always, that if the said William Lockhart Morton shall not, within three days after the granting of these Letters of Registration, register the same in the proper office in the Supreme Court, at Sydney, in the said Colony of New South Wales, then these Letters of Registration, and all advantages whatsoever hereby granted, shall cease and become void.

In witness whereof, I have hereunto set my sign manual, and have caused the present Letters of Registration to be sealed with the seal of the said Colony of New South Wales, at Government House, Sydney, in New South Wales, this twenty-first day of April, in the year of our Lord one thousand eight hundred and seventy-nine.

[L.S.]

ALFRED STEPHEN,
Lieutenant-Governor,
Administering the Government of the said Colony.

A.D. 1879. No. 731.

Self-acting Gate.

SPECIFICATION.

THIS invention consists in appliances by which an individual on horseback or driving can open a gate when at the distance of 25 or 50 feet or 50 or 100 yards or more from it, and can shut it after he has passed through to a similar distance, without dismounting or alighting. This is effected by simply moving with the hand a horizontal lever fixed on the top of a post about 6 feet high at the above or any convenient distance from the gate, one on each side, with the long ends of the levers projecting within reach from the roadway, both levers acting so as to shut and open the gate from whichever side it is approached. This invention can be applied to any single gate now in use without interfering with its hinges, but in the accompanying drawings it is shown as applied to the upper hinge. Both parts of this hinge—the part which is fixed to the gate and the part fixed to the gate-post—is made with a socket. A round iron bar of the same size as the sockets passes vertically through both sockets and thus forms a hinge. The lower end of this iron bar projects below the hinge, and this projecting part is square. On this squared part is fixed a triangular or half-round disc of wrought or cast iron. The square hole in this disc must have its sides at an angle of forty-five degrees to the acting side of the disc. The upper end of the round iron bar standing in the two sockets is provided with a collar which rests on the hinge, the bar itself rising to any convenient height, and is steadied by a bolt in the gate-post. At its upper end is either a double crank or a round disc of cast iron fixed horizontally on the iron bar. In this cast iron disc are eight or more holes so that the leverage can be adjusted to suit any curve or angle, even a right angle, in the roadway. When the roadway is straight two bolts with two small friction plates are required in the disc, but when there is a right angle in the roadway four bolts and four friction plates, two of the latter being above and two below the cast iron disc, must be used. From the friction plates two wires on each side of the gate are stretched to the horizontal or hand levers placed at a distance from the gate. By making one pair of wires cross each other, the gate is both opened and shut by a push from whichever side it is approached. Two wires are attached to each hand lever by two screwed bolts with nuts for keeping the wires tight.

The gate when shut or open is secured by a bolt which is suspended by a spring and rod or wire. Attached to this bolt is a wire extending horizontally along the centre of the gate and secured to the lower and longer end of a lever, the shorter end of which is acted upon by the triangular or half-round disc above referred to. The fulcrum of this lever being near the upper end which is acted upon by the triangular or half-round disc pressing it towards the gate, a slight movement withdraws the gate bolt.

The mode in which the gate is opened or shut is as follows :—When the operator moves either hand lever the movement is communicated by the wires, or strictly speaking one of the wires, to the upright iron bar, by means of its cranks or cast iron disc. The iron bar and its attached triangular or half-round disc are thus turned. The first action of the triangular or half-round disc is to push towards the gate the short end of the opening lever, the longer end with its wire attached to the gate bolt is thus drawn out away from the gate, and the gate is thus unbolted. No further action is on the gate itself, which is swung open or is shut as may be required.

In order to obviate the necessity of altering hinges now in use, I claim a right to fix the vertical iron bar with its double crank or round disc of cast iron, and its triangular or half-round disc, wholly above the upper hinge, securing them to the gate posts by two bolts with eyes, but exactly in a line vertical to both hinges. The lever which draws the gate bolt in this case is made to pass downwards on one side of the upper hinge of the gate.

In this invention I specially claim the entire arrangement of parts for opening and shutting gates without the operator requiring to dismount or alight, and by which a gate can be opened and shut by a slight pressure, and as gently and with as much certainty even in a high wind as if it were opened or shut by hand. I also specially claim the appliance for first drawing the gate bolt and then opening or shutting the gate in one operation and by one movement. In the use of both upper and lower hinges, made with double sockets and a long iron bar passing vertically through both, I claim a right to apply both discs to such iron bar when lengthened, and to fix the triangular or half-round disc either above or below the upper hinge.

Given under my hand and seal, this twentieth day of February, in the year of our Lord one thousand eight hundred and seventy-nine.

WILLIAM LOCKHART MORTON.

This is the specification referred to in the annexed Letters of Registration granted to William Lockhart Morton, this twenty-first day of April, A.D. 1879.

ALFRED STEPHEN.

REPORT.

Sir, Sydney, 7 March, 1879.

We do ourselves the honor to report, in reply to your blank cover communication of the 28th ultimo, No. 1,485, transmitting Mr. William Lockhart Morton's petition for Letters of Registration of a "Self-acting Gate," that we see no objection to the issue of Letters of Registration, in terms of Mr. Morton's Petition, specification, drawings, and claim.

We have, &c.,
GOTHER K. MANN.
JAMES BARNET.

The Principal Under Secretary.

[Drawings—one sheet.]

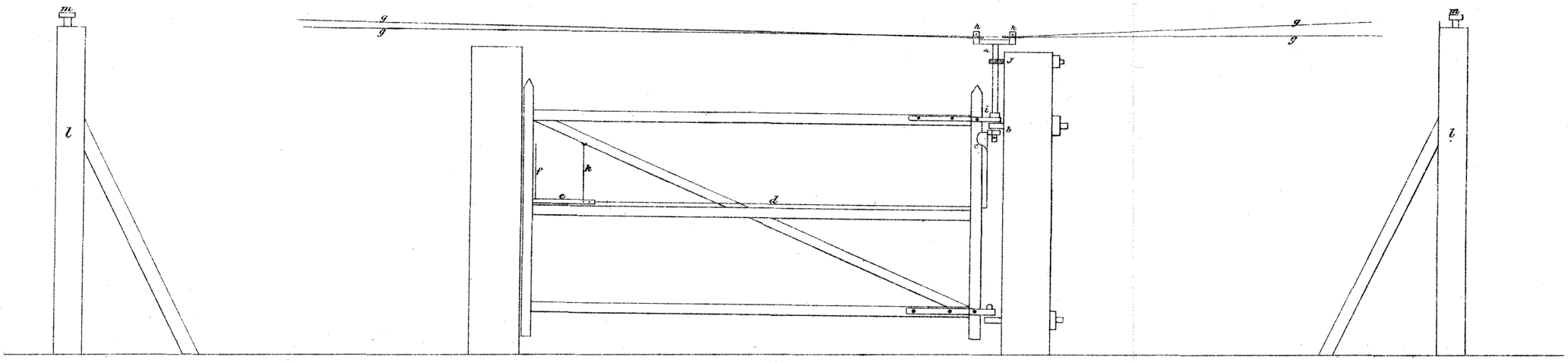

This is the Sheet of Drawings referred to in the annexed Letters of Registration granted to William Lockhart Morton this twentyfirst day of April A.D. 1879.

Alfred Stephen.
Lt Govr

a Vertical round iron bar forming core of upper hinge
b Triangular disk on squared end of iron bar a
c Lever acted on by triangular disk b to draw gate-bolt
d Wire connecting lever c with gate-bolt
e Gate-bolt suspended by spring f and wire k
f Spring to cause gate-bolt to react
gggg Wires attached by screwed bolts to levers 25 or more feet distant.
hh Cast iron disk with bolts and friction plates to which the four wires are attached.
i Collar on bar a
j Bolt with eye to steady bar a
k Wire which with spring f suspends gate-bolt
ll Posts on which horizontal levers are fixed by bolts m.m 25 or 50 feet or 50 yards from gate
m.m Bolts on which levers six feet long turn

[Sig. 198]

PHOTO-LITHOGRAPHED AT THE GOVT. PRINTING OFFICE, SYDNEY, NEW SOUTH WALES.

A.D. 1879, 21*st April*. No. 732.

IMPROVEMENTS IN HARVESTING MACHINES.

LETTERS OF REGISTRATION to George Phillipson, junior, for Improvements in Harvesting Machines.

[Registered on the 22nd day of April, 1879, in pursuance of the Act 16 Vic. No. 24.]

BY His Excellency Sir Alfred Stephen, Knight Commander of the Most Distinguished Order of Saint Michael and Saint George, and a Companion of the Most Honorable Order of the Bath, Lieutenant-Governor of New South Wales.

TO ALL TO WHOM THESE PRESENTS SHALL COME, greeting:

WHEREAS George Phillipson, junior, of Wangaratta, in the Colony of Victoria, miller, hath by his Petition humbly represented to me that he is the author or designer of a certain invention or improvement in manufactures, that is to say, of an invention intituled "Improvements in Harvesting Machines," which is more particularly described in the specification and the sheet of drawings which are hereunto annexed; and that he, the said Petitioner, hath deposited with the Honorable the Treasurer of the said Colony of New South Wales the sum of Twenty Pounds sterling, for defraying the expense of granting these Letters of Registration, as required by the Act of Council, sixteenth Victoria, number twenty-four; and hath humbly prayed that I would be pleased to grant Letters of Registration, whereby the exclusive enjoyment and advantage of the said invention or improvement might be secured to him for a period of fourteen years: And I, being willing to give encouragement to all inventions and improvements in the arts or manufactures which may be for the public good, and having received a report favourable to the prayer of the said Petition, from competent persons appointed by me to examine and consider the matters stated therein and to report thereon for my information, am pleased, with the advice of the Executive Council, and in exercise of the power and authority given to me by the said Act of Council, to grant, and do by these Letters of Registration grant unto the said George Phillipson, junior, his executors, administrators, and assigns, the exclusive enjoyment and advantage of the said invention or improvement, for and during the term of fourteen years from the date hereof; to have, hold, and exercise unto the said George Phillipson, junior, his executors, administrators, and assigns, the exclusive enjoyment and advantage thereof, for and during and unto the full end and term of fourteen years from the date of these presents next and immediately ensuing, and fully to be complete and ended: Provided always, that if the said George Phillipson, junior, shall not, within three days after the granting of these Letters of Registration, register the same in the proper office in the Supreme Court, at Sydney, in the said Colony of New South Wales, then these Letters of Registration, and all advantages whatsoever hereby granted, shall cease and become void.

In witness whereof, I have hereunto set my sign manual, and have caused the present Letters of Registration to be sealed with the seal of the said Colony of New South Wales, at Government House, Sydney, in New South Wales, this twenty-first day of April, in the year of our Lord one thousand eight hundred and seventy-nine.

[L.S.] ALFRED STEPHEN,
Lieutenant-Governor,
Administering the Government of the said Colony.

A.D. 1879. No. 732.

Improvements in Harvesting Machines.

SPECIFICATION of GEORGE PHILLIPSON, Junior, of Wangaratta, in the Colony of Victoria, miller, for an Invention intituled "Improvements in Harvesting Machines."

THIS invention consists of certain improvements in the ordinary grain-stripping machines, for the purpose of winnowing and bagging the crop as well as stripping it.

I retain the general construction of the common stripping machines, but immediately behind the beater drum I provide a fan, which for convenience of reference I will call fan No. 1. This fan creates a draught very nearly in a line with the outer casing of the front of the machine, in a convenient part of which I make a hole as an outlet for the chaff, &c., separated from the stripped grain by the action of this fan. Underneath and in a line with this draught I provide an endless inclined canvas travelling apron, with cross wooden slats for receiving the partially winnowed grain. This apron carries it up a sufficient height to give it a fall on to the shakers behind. Whilst it is in the act of falling, it is still further winnowed by a second draught produced by fan No. 2 (fixed just behind fan No. 1), which blows out the rest of the chaff, and discharges it at the back of the machine. The shakers separate the straws and white heads from the clean grain. The straws and white heads remain on the top shaker or riddle, and are conducted by it to a shoot leading to an elevator, which carries them back to the front of the machine, and discharges them through another shoot into the top of the beater cylinder. The clean grain falls through on to the lower shaker or riddle, and is conducted by it to a shoot which leads to an elevator that lifts it a sufficient height and discharges it through a shoot into a hopper, through the mouth of which it passes into a bag or sack at the side of the machine. These bags are supported on a platform about eighteen inches from the ground, and when they are full they are sewed up and tipped off.

The bulk of the straw is discharged on to an endless travelling riddle, consisting of cross slats with spaces between, through which whatever grain may be carried with it is allowed to fall on to an inclined plane leading to the shakers below.

The shakers or riddles are supported in a peculiar manner for the purpose of preserving the nearly horizontal position at which they are set. They are supported from a platform underneath, suspended from a universal joint carried by the frame of the machine.

Referring to the drawings hereto attached, and to the letters and figures marked thereon, which indicate similar parts wherever they occur. Figure 1 is a side elevation of a machine made according to my invention, with a part of the side casing broken away in order to show some of the working parts. Figure 2 is an elevation of the same machine taken from the opposite side. Figure 3 is a plan; and figure 4 back view thereof. A is the guide wheel, B B the draught wheels, C the comb, and D the beaters, of an ordinary stripping machine. Almost immediately after the stripped grain has been delivered into the machine, my contrivances come into play thus:—After said grain has passed a bridge E, it is subjected to the action of a strong current or blast produced by fan F in the direction shown by the arrows; this carries the bulk of the chaff upward and blows it through the outlet F^1, whilst the bulk of the grain is carried upward by an elevator, G, consisting of an endless travelling apron with cross wooden slats of the shape shown, from the extremity of which elevator it falls on to the top shaker or riddle H. As it falls, it is subjected to the action of another strong current or blast produced by fan J in the direction shown by the arrows; this carries away the rest of the chaff and blows it out at the back of the machine through outlet J^1. The straw, and whatever small quantity of grain may be carried with it, falls on to an open travelling platform K, consisting of cross wooden slats as shown, through which the grain falls on to an inclined plane L, and from thence to the top shaker or riddle H, whilst the straw is carried along and discharged at the back of the machine at K^1. The clean grain falls through the meshes in the top riddle on to the lower one H^1, and through this lower one on to an inclined wooden tray, H^2, the spout of which has an inclination towards the near side of the machine discharging its grain into the trough M of an elevator, M^1, which carries it up and discharges it through a spout, M^2, into a hopper, N, from whence it passes through mouth N^1 into a bag or sack resting on platform P. On the other hand, the white heads, &c., are discharged by the spout of the top shaker H into the trough Q on the off side of the machine, and towards which it has an inclination. From this trough they are taken by elevator Q^1, and returned through shoot Q^2 into the top of the beater drum to be re-threshed and re-winnowed.

It is to be noticed that the hopper N is connected to and supported by the carriage of the guide-wheel, and consequently it and the platform P are always the same height from the ground, and are not affected by the adjustment of the machine.

The shakers or riddles H and H^1 are supported from platform H^3, suspended by rods H^4 from universal joint H^5 carried by the frame of the machine. This enables them to preserve the position in which they are set, no matter what may be the conformation of the ground over which the machine is travelling.

The power to drive all the working parts of this machine is taken from the near draught wheel through pinion R (on shaft R^1), which gears into the teeth on the inner face of a circular rim, S, attached to said wheel.

The beaters are driven by belt D^1 from pulley D^2 on said shaft R^1. The two fans are driven by one belt, F^2, from pulley F^3 on said shaft. The elevator G is driven by belt, G^1, from pulley G^2 on said shaft R^1. The straw elevator K is driven by belt K^1 from another pulley K^2 on the same shaft. The shakers or riddles H and H^1, and tray H^2, receive their motion from a crank and connecting rod, driven by means of belt H^6 from another pulley, H^7, on the same shaft. The elevator M^1 is driven by belt M^3 from a pulley, M^4, on the same shaft, and the elevator Q^1 is driven by belt Q^3 from pulley Q^4, on the same spindle as the pulley by which the elevator G is driven.

Having thus described the nature of my invention, and the manner of performing it, I would have it clearly understood that I do not claim to be the inventor of any part of the stripping machinery herein described and explained, nor do I claim the exclusive use of fans for winnowing or shakers for riddling the grain, but my invention consists in the combination and arrangement of the winnowing and riddling machinery with the stripping, and the peculiar method of supporting the riddles, thus—

Improvements in Harvesting Machines.

I claim as my invention—the combination, with an ordinary stripping machine, of—

First—A fan so placed as to act upon the stripped grain almost immediately after it enters the machine, such draught to be approximating in direction to the front of the machine, and to have an outlet for the chaff at its extremity, substantially as shown.

Second—A second fan so placed as to act upon the grain after the first, and while it is in the act of falling from the elevator to the shakers or riddles.

Third—A straw elevator and discharger, constructed like a riddle, so as to allow the grain to fall through it and be conducted to the shakers or riddles.

Fourth—Supporting the shakers from a platform suspended from a universal joint carried by the frame of the machine.

Fifth—An elevator for returning the straws and white heads to the front of the machine for rethreshing and rewinnowing.

All combined and arranged in the manner and for the purpose substantially as herein described and explained.

In witness whereof, I, the said George Phillipson, junior, have hereto set my hand and seal, this tenth day of March, one thousand eight hundred and seventy-nine.

GEORGE PHILLIPSON, JNR.

This is the specification referred to in the annexed Letters of Registration granted to George Phillipson, junior, this twenty-first day of April, A.D. 1879.

ALFRED STEPHEN,
Lt.-Govr.

REPORT.

Sir, Sydney, 24 March, 1879.

We do ourselves the honor to report, in reply to your blank cover communication of the 17th instant, No. 1,976, that we see no objection to the Registration of Mr. George Phillipson, junior's, "Improvements in Harvesting Machines," in accordance with his Petition, specifications, drawings, and claim.

We have, &c.,
GOTHER K. MANN.
ROBERT GEO. MASSIE.

The Principal Under Secretary.

[Drawings—one sheet.]

Nos. 733 & 734.

[Assignments of No. 242A. See page 73 of Return of 21 June, 1872.]

No. 735.

[Assignment of No. 558. See page 167 of Return of 4 June, 1879.]

C. PHILLIPSON (JNRS.) PATENT.

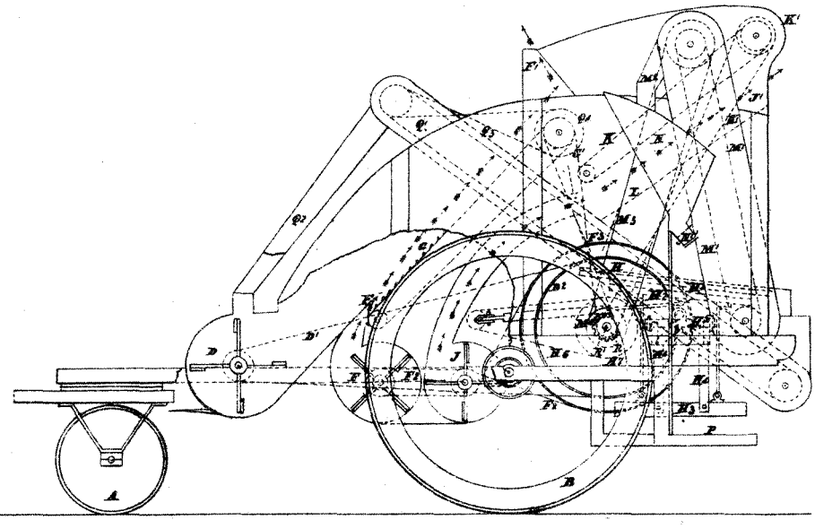

Fig. 1.

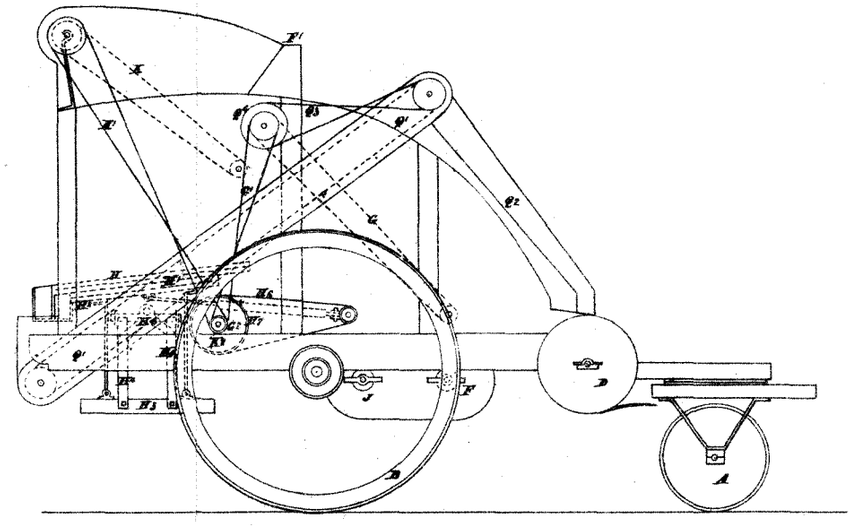

Fig. 2.

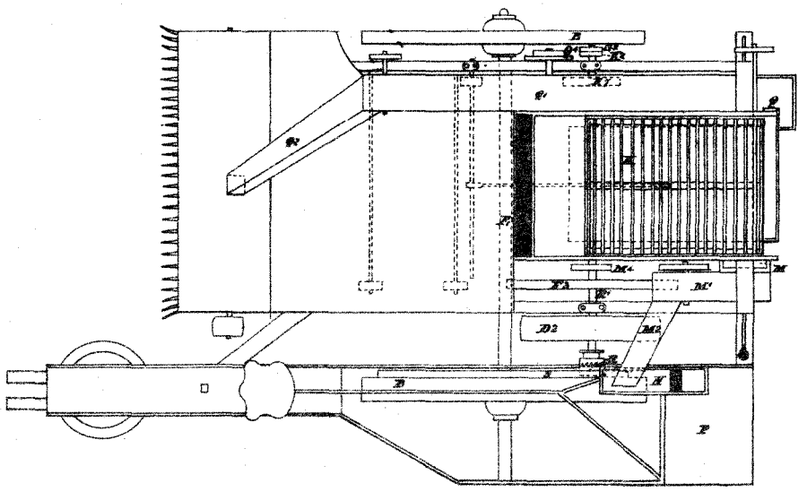

Fig. 3.

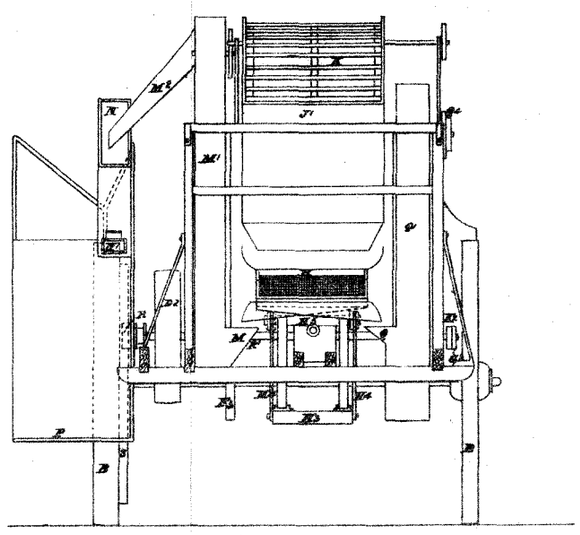

Fig. 4.

This is the Sheet of Drawings referred to in the annexed Letters of Registration granted to George Phillipson Junior this twenty first day of April A.D. 1879

"Alfred Stephen"
Lt Gov.

(Sig. 198)

PHOTO-LITHOGRAPHED AT THE GOVT. PRINTING OFFICE, SYDNEY, NEW SOUTH WALES.

A.D. 1879, 9*th May*. No. 736.

AN IMPROVED METHOD OF STOPPERING BOTTLES CONTAINING AERATED WATERS.

LETTERS OF REGISTRATION to John Starkey, for an improved method of Stoppering Bottles containing Aerated Waters.

[Registered on the 10th day of May, 1879, in pursuance of the Act 16 Vic. No. 24.]

BY His Excellency Sir Alfred Stephen, Knight Commander of the Most Distinguished Order of Saint Michael and Saint George, and a Companion of the Most Honorable Order of the Bath, Lieutenant-Governor of New South Wales.

TO ALL TO WHOM THESE PRESENTS SHALL COME, greeting:

WHEREAS John Starkey, of Phillip-street, in the city of Sydney, in the Colony of New South Wales, manufacturer, hath by his Petition humbly represented to me that he is the assignee of William Warren Bird, who is the author or designer of a certain invention or improvement in manufactures, that is to say, of an invention for an "Improved method of Stoppering Bottles containing Aerated Waters," which is more particularly described in the specification which is hereunto annexed; and that he, the said Petitioner, hath deposited with the Honorable the Treasurer of the said Colony of New South Wales the sum of Twenty Pounds sterling, for defraying the expense of granting these Letters of Registration, as required by the Act of Council, sixteenth Victoria, number twenty-four; and hath humbly prayed that I would be pleased to grant Letters of Registration, whereby the exclusive enjoyment and advantage of the said invention or improvement might be secured to him for a period of fourteen years: And I, being willing to give encouragement to all inventions and improvements in the arts or manufactures which may be for the public good, and having received a report favourable to the prayer of the said Petition, from competent persons appointed by me to examine and consider the matters stated therein and to report thereon for my information, am pleased, with the advice of the Executive Council, and in exercise of the power and authority given to me by the said Act of Council, to grant, and do by these Letters of Registration grant unto the said John Starkey, his executors, administrators, and assigns, the exclusive enjoyment and advantage of the said invention or improvement, for and during the term of fourteen years from the date hereof; to have, hold, and exercise unto the said John Starkey, his executors, administrators, and assigns, the exclusive enjoyment and advantage thereof, for and during and unto the full end and term of fourteen years from the date of these presents next and immediately ensuing, and fully to be complete and ended: Provided always, that if the said John Starkey shall not, within three days after the granting of these Letters of Registration, register the same in the proper office in the Supreme Court at Sydney, in the said Colony of New South Wales, then these Letters of Registration, and all advantages whatsoever hereby granted, shall cease and become void.

In witness whereof, I have hereunto set my sign manual, and have caused the present Letters of Registration to be sealed with the seal of the said Colony of New South Wales, at Government House, Sydney, in New South Wales, this ninth day of May, in the year of our Lord one thousand eight hundred and seventy-nine.

[L.S.] ALFRED STEPHEN,
Lieutenant-Governor,
Administering the Government of the said Colony.

Improved method of Stoppering Bottles containing Aerated Waters.

SPECIFICATION of JOHN STARKEY, of Phillip-street, in the city of Sydney and Colony of New South Wales, manufacturer, for an "Improved method of Stoppering Bottles containing Aerated Waters."

THIS invention I would thus describe:—Such a bottle as has been made use of for many years in the bottling of aerated waters is used. Around the neck of such a bottle is placed a stout iron wire hoop, having on either side of it an eye. A loop of wire of a similar kind, sufficient in height to keep the stopper hereinafter described in its proper position in the bottle, when it is stoppered or closed, is then taken, and each end of it is placed in one of the eyes on the loop, thus forming a sort of arch above the mouth of the bottle, which can be easily raised in the process of closing the bottle, and as easily lowered when it is wished to open the bottle.

The stopper above referred to is made of earthenware, wood, or other suitable material (earthenware being preferred). In length it is a little more than an inch from top to bottom; near the centre of it is a groove around it into which a washer of india-rubber or gutta-percha is placed, and beneath such groove and washer it is so shaped that it can be placed in the neck of the bottle; above the groove and washer is a head, the lower end of which is just larger round than the mouth of the bottle; on one side of this head is a ledge for the wire hoop to rest upon when the bottle is closed; in this head a wire pin is secured with a small chain attached to it which is fastened to the wire hoop, this being done for the purpose of preventing the stopper being lost when the bottle is opened.

The mode of using this stopper is very simple. The bottle being filled, the stopper is placed in the neck of it, into which it is pressed until only the head of it is above the mouth of the bottle; this done, the wire hoop is lifted and placed upon the ledge, and the bottle is securely corked or stoppered. To open the bottle it is only necessary to remove the wire hoop from the ledge, when the stopper will fly out of the bottle, and will be retained for further use by means of the wire pin and chain. At or near the top of the loop a projection to facilitate the opening of the bottle may be made if thought desirable.

Having thus described the nature of the invention, and the method of performing the same, I would have it understood that what I claim is the improved method of stoppering bottles containing aerated waters, as is above substantially described.

JOHN STARKEY.

This is the specification referred to in the annexed Letters of Registration granted to John Starkey, this ninth day of May, A.D. 1879.

ALFRED STEPHEN.

REPORTS, &c.

Sir, Sydney, 4 September, 1877.

We do ourselves the honor to report, in reply to your blank cover communication of the 25th ultimo, that we find that Mr. John Starkey is neither the author or designer, nor does he produce any documents establishing his claim as assignee for an "Improved method of Stoppering Bottles containing Aerated Waters," which method appears from Mr. Starkey's statement, and from the trade-mark on the stoppers of bottles submitted to us for inspection by him, to be an English patent, and now in use in this Colony; we are therefore of opinion that the prayer of Mr. Starkey's Petition cannot be complied with. We would add that this method is identical with the one submitted by Mr. Frederick James Hamilton, on which we have also reported.

We have, &c.,
GOTHER K. MANN.
ROBERT G. MASSIE.

The Principal Under Secretary.

Sir, Sydney, 23 May, 1878.

We do ourselves the honor to report, in reply to your blank cover communication of the 10th instant, No. 4,077, that the deed of assignment to Mr. John Starkey, in reference to his claim for a method of stoppering bottles, reported on by our letter of the 4th of September last, appearing to us so far satisfactory, we are of opinion that Letters of Registration may now be granted to Mr. Starkey.

In making this recommendation, we refrain from expressing any opinion how far the apparent previous use of this method in the Colony would affect Mr. Starkey's registration.

We have, &c.,
GOTHER K. MANN.
ROBERT G. MASSIE.

The Principal Under Secretary.

Sir, Sydney, 10 February, 1879.

On receipt of your blank cover communication of the 3rd ultimo, transmitting papers in reference to Mr. Starkey's application for Letters of Registration of a method of stoppering bottles, I requested Mr. Starkey to meet me and to produce any evidence that he might desire, relative to his question of apparent previous use in this Colony. At that meeting, at which Mr. Starkey and his solicitor were present, no supplemental information was produced, but a request was made to me to delay my report to enable Mr. Starkey to forward some further documentary evidence; this evidence I have not received, and therefore now deem it expedient to report without further delay, and to recapitulate that Mr. Starkey in his original Petition, transmitted under your blank cover communication of the 22nd August, 1877, prays that Letters of Registration may be granted to him as assignee of the "author or designer," but produces no deed to that effect; it is intimated however that this document will be forwarded as soon as it

is

is received from America. Mr. Starkey produces to the Board a sample bottle, which on examination indicates that it is a British Patent that he is applying for. Mr. Hamilton at the same time applies for Letters of Registration as "author or designer" of a method for stoppering bottles similar to that of Mr. Starkey's, excepting that Mr. Hamilton's exhibit has no British or other trade mark, and has to all appearance been manufactured in the Colony. Thus it appearing that neither applicant had a *bona fide* claim either as author or assignee, the Board were of opinion that registration could not be granted in either case, and by their letters of the 4th September, 1877, reported accordingly. By your further communication of the 10th May, 1878, it appearing that a deed of assignment had subsequently been executed by the original patentees, Messrs. Warren, Bird, & Co., of Guernsey, in favour of Mr. Starkey, the Board were under these circumstances of opinion that registration might then be granted to him, the Board considering that the question of previous use in the Colony arising out of Mr. Hamilton's exhibit was one affecting Mr. Starkey's interests only, inasmuch as that the registration could not infringe any public right, as Mr. Starkey's registration would become null and void if previous use in the Colony was clearly established.

Under these circumstances, which still pertain, I would venture to express the opinion that Registration may be granted to Mr. Starkey, as recommended by the Board's letter of the 23rd May last.

I have, &c.,

The Principal Under Secretary. GOTHER K. MANN.

Sir, Sydney, 13 February, 1879.

Adverting to my letter of the 10th instant, I do myself the honor to forward the enclosed statutory declarations that I have this day received from Mr. Curtis, and to state that they appear to me to materially strengthen Mr. Starkey's claim to the issue of Letters of Registration, as recommended by my letter of the above date.

I have, &c.,

The Principal Under Secretary. GOTHER K. MANN.

Statutory Declarations.

I, GEORGE BEARD, of ———, in the Colony of New South Wales, do hereby solemnly and sincerely declare as follows:—

I am acquainted with Mr. John Starkey, cordial manufacturer, of Sydney, and have seen the patent stoppers for which he is making application for Letters of Registration for the said Colony; and to the best of my knowledge and belief the same have never been sold to the public, or have they been used in this Colony. I have had many years experience in the business of cordial manufacture. I have now the business lately carried on by Mr. F. J. Hamilton.

And I make this solemn declaration, conscientiously believing the same to be true, and by virtue of the provisions of an Act made and passed in the ninth year of the reign of Her present Majesty, intituled "An Act for the more effectual abolition of Oaths and Affirmations taken and made in various Departments of the Government of New South Wales and to substitute Declarations in lieu thereof and for the suppression of voluntary and extra-judicial Oaths and Affidavits."

G. BEARD.

Declared at Sydney, this first day of February, 1879, before me,—

J. HAWKINS BUTCHART, J.P.

I, JOHN STARKEY, of Sydney, in the Colony of New South Wales, cordial manufacturer, do hereby solemnly and sincerely declare as follows:—

I am the applicant for Letters of Registration as assignee for an improved method of stoppering bottles for aerated waters. I have been in the business in Sydney for over twenty years. The patent stoppers mentioned in my application have never been sold in Sydney or in the Colony of New South Wales, neither have they been used. The only bottles in the Colony with the said patent stoppers were received by me as samples from my agent in London, Mr. William Holme Davies. To the best of my knowledge and belief, Mr. F. J. Hamilton, who has made a declaration herein, dated the 5th day of February instant, is the Mr. Hamilton who had formerly sent in an application for a stopper something similar to mine.

And I make this solemn declaration, conscientiously believing the same to be true, and by virtue of the provisions of an Act made and passed in the ninth year of the reign of Her present Majesty, intituled, "An Act for the more effectual abolition of Oaths and Affirmations taken and made in various Departments of the Government of New South Wales and to substitute Declarations in lieu thereof and for the suppression of voluntary and extra-judicial Oaths and Affidavits.

JOHN STARKEY.

Declared at Sydney, this fifth day of February, 1879, before me,—

HENRY C. ALGER,
Commissioner for Affidavits.

I,

A.D. 1879. No. 736.

Improved method of Stoppering Bottles containing Aerated Waters.

I, F. J. HAMILTON, of ———, in the Colony of New South Wales, do hereby solemnly and sincerely declare as follows :—

I have seen the patent stoppers for which Mr. John Starkey is applying for Letters of Registration in the Colony, and to the best of my knowledge and belief the same have never been sold to the public, or have they been used in this Colony. I have had many years experience in the business of aerated water manufacturer in this Colony.

And I make this solemn declaration, conscientiously believing the same to be true, and by virtue of the provisions of an Act made and passed in the ninth year of the reign of Her present Majesty, intituled "An Act for the more effectual abolition of Oaths and Affirmations taken and made in various Departments of the Government of New South Wales and to substitute Declarations in lieu thereof and for the suppression of voluntary and extra-judicial Oaths and Affidavits."

F. J. HAMILTON.

Subscribed and declared at , this fifth day of February, 1879, before me,—

JAMES BLAIR, J.P.

A.D. 1879, 28*th May*. No. 737.

IMPROVEMENTS IN HOLDERS OR GALLERIES FOR GLOBES AND SHADES FOR GAS AND OTHER LIGHTS.

LETTERS OF REGISTRATION to Joseph Breeden, for Improvements in Holders or Galleries for Globes and Shades for gas and other lights.

[Registered on the 29th day of May, 1879, in pursuance of the Act 16 Vic. No. 24.]

BY His Excellency Sir Alfred Stephen, Knight Commander of the Most Distinguished Order of Saint Michael and Saint George, and a Companion of the Most Honorable Order of the Bath, Lieutenant-Governor of New South Wales.

TO ALL TO WHOM THESE PRESENTS SHALL COME, greeting:

WHEREAS Joseph Breeden, of Birmingham, in the county of Warwick, England, gas-fitting and chandelier maker, hath by his Petition humbly represented to me that he is the author or designer of a certain invention or improvement in manufactures, that is is to say, of an invention entitled, "Improvements in Holders or Galleries for Globes and Shades for gas and other lights," which is more particularly described in the specification and the sheet of drawings which are hereunto annexed; and that he, the said Petitioner, hath deposited with the Honorable the Treasurer of the said Colony of New South Wales the sum of Twenty Pounds sterling, for defraying the expense of granting these Letters of Registration, as required by the Act of Council, sixteenth Victoria, number twenty-four; and hath humbly prayed that I would be pleased to grant Letters of Registration, whereby the exclusive enjoyment and advantage of the said invention or improvement might be secured to him for a period of fourteen years: And I, being willing to give encouragement to all inventions and improvements in the arts or manufactures which may be for the public good, and having received a report favourable to the prayer of the said Petition, from competent persons appointed by me to examine and consider the matters stated therein and to report thereon for my information, am pleased, with the advice of the Executive Council, and in exercise of the power and authority given to me by the said Act of Council, to grant, and do by these Letters of Registration grant unto the said Joseph Breeden, his executors, administrators, and assigns, the exclusive enjoyment and advantage of the said invention or improvement, for and during the term of fourteen years from the date hereof; to have, hold, and exercise unto the said Joseph Breeden, his executors, administrators, and assigns, the exclusive enjoyment and advantage thereof, for and during and unto the full end and term of fourteen years from the date of these presents next and immediately ensuing, and fully to be complete and ended: Provided always, that if the said Joseph Breeden shall not, within three days after the granting of these Letters of Registration, register the same in the proper office in the Supreme Court, at Sydney, in the said Colony of New South Wales, then these Letters of Registration, and all advantages whatsoever hereby granted, shall cease and become void.

In witness whereof, I have hereunto set my sign manual, and have caused the present Letters of Registration to be sealed with the seal of the said Colony of New South Wales, at Government House, Sydney, in New South Wales, this twenty-eighth day of May, in the year of our Lord one thousand eight hundred and seventy-nine.

[L.S.] ALFRED STEPHEN,
Lieutenant-Governor,
Administering the Government of the said Colony.

Improvements in Holders or Galleries for Globes and Shades for gas and other lights.

SPECIFICATION of JOSEPH BREEDEN, of Birmingham, in the county of Warwick, England, gas-fitting and chandelier maker, for an invention entitled "Improvements in Holders or Galleries for Globes and Shades for gas and other lights."

MY invention of improvements in "holders" or "galleries" for supporting globes and shades used with gas and other lights relates to holders of that class in which the arms or claws are made to expand and contract to suit different sized globes and shades, and to enable the globe or shade to be placed and secured in or on the holder; and it has for its object to provide a neat and compact arrangement of expanding holder or gallery, in which the means of adjustment are almost entirely concealed from view. According to my invention, the radial arms of the holder or gallery are hinged or pivoted to ears fixed around the central tube of the burner, and the arms work in vertical planes, so that by bringing them nearer to the horizontal or the vertical position (as the case may be) their extremities will diverge more or less as required. In order to adjust the arms and hold them rigidly in any position in which they may be set, each arm has a toothed sector concentric with its pivot, and the several arms are adjusted simultaneously by a tangent screw or worm gearing with the toothed sectors of all the arms.

This worm is fitted to rotate on the central tube of the burner, and is confined between collars or shoulders to prevent any vertical movement of the worm, and it has a milled flange, ornamental knob, or other convenient means of rotating it. This worm would be concealed from view by a downwardly projecting rim or shield.

For ordinary chandelier or bracket globes the arms would have hook-shaped claws at the outer extremities to embrace and grasp the flange of the globe or shade.

DESCRIPTION OF DRAWINGS.

In the accompanying drawings figure 1 is an elevation, and figure 2 a plan of a gas bracket provided with my improved globe-holder, and figure 3 is a central vertical section of the same drawn to a larger scale; figure 4 is an elevation like figure 1, but slightly modified.

A is the central or jet tube of the burner, which is plain externally, and B is a short tube or sleeve fitted to rotate upon it between a shoulder, *a*, at bottom and a collar, C, at top, soldered or otherwise fixed to tube A; D is a coarse screw-thread or worm cut on the upper part of the sleeve B, and *b* is a milled flange around the bottom of said sleeve, by means of which it is rotated.

In figure 1 the collar C has a downwardly projecting rim which conceals the worm D, but in figure 4 this rim is omitted and the worm is visible.

E are pairs of ears projecting radially from collar C, upon which they are formed at equal distances apart; and F are the radial arms of the globe-holder or gallery, terminating at their outer ends in claws, G, which embrace the flange of the globe. Each arm F is received at its other end between a pair of the ears E, and works on a horizontal pivot, *f*, fixed therein; H is a toothed sector formed on this end of each arm F concentrically with its pivot *f*; the sectors of all the arms gear with the worm D on tube B, by rotating which the arms are simultaneously caused to describe arcs of equal length, thereby expanding or contracting the embrace of the claws G, as indicated by the dotted lines in figure 3, the claws G always remaining concentric with the burner. The arms F may be raised until the claws G are close up to the burner, as indicated at G′ in figure 3, so as to occupy less room and to be less liable to injury when packed for carriage.

When intended to support an opal glass or other shade, the holder would be constructed as above described, except that the arms F would be of greater length, and the claws at their extremities would be of a form adapted to embrace the rim of the shade.

CLAIMS.

First—Mounting the arms of gas and other globe and shade holders to work on pivots or axes in a support on the burner tube so that the arms shall be free to describe arcs of circles, substantially as and for the purpose described.

Secondly—In a gas and other globe and shade holder, the combination with the arms mounted to work on pivots and provided with toothed sectors as described, of the worm mounted to rotate and gear with said sectors, substantially as and for the purpose shown and described.

In witness whereof, I, the said Joseph Breeden, have hereunto set my hand and seal, this twenty-fifth day of February, 1879.

JOSEPH BREEDEN.

Witnesses—
JAS. HY. FISHER,
THOMAS COOKE,
Clerks to Mr. R. H. NULWARD,
Notary Public, Birmingham.

This is the specification referred to in the annexed Letters of Registration granted to Joseph Breeden, this twenty-eighth day of May, A.D. 1879.

ALFRED STEPHEN.

REPORT.

Improvements in Holders or Galleries for Globes and Shades for gas and other lights.

REPORT.

Sir, Sydney, 5 May, 1879.

We do ourselves the honor to state, on examination of Mr. Joseph Breeden's Petition, specification, drawings, and claims for the registration of his invention entitled "Improvements in Holders or Galleries for Globes and Shades for gas and other lights," transmitted for our report under your blank cover communication of the 30th ultimo, No. 3,196, that we see no objection to the issue of Letters of Registration in favour of Mr. Joseph Breeden.

We have, &c.,
GOTHER K. MANN.
ROBERT G. MASSIE.

The Principal Under Secretary.

[Drawings—one sheet.]

No. 738.

[Assignment of No. 711. See Letters of Registration for 1878, page 157.]

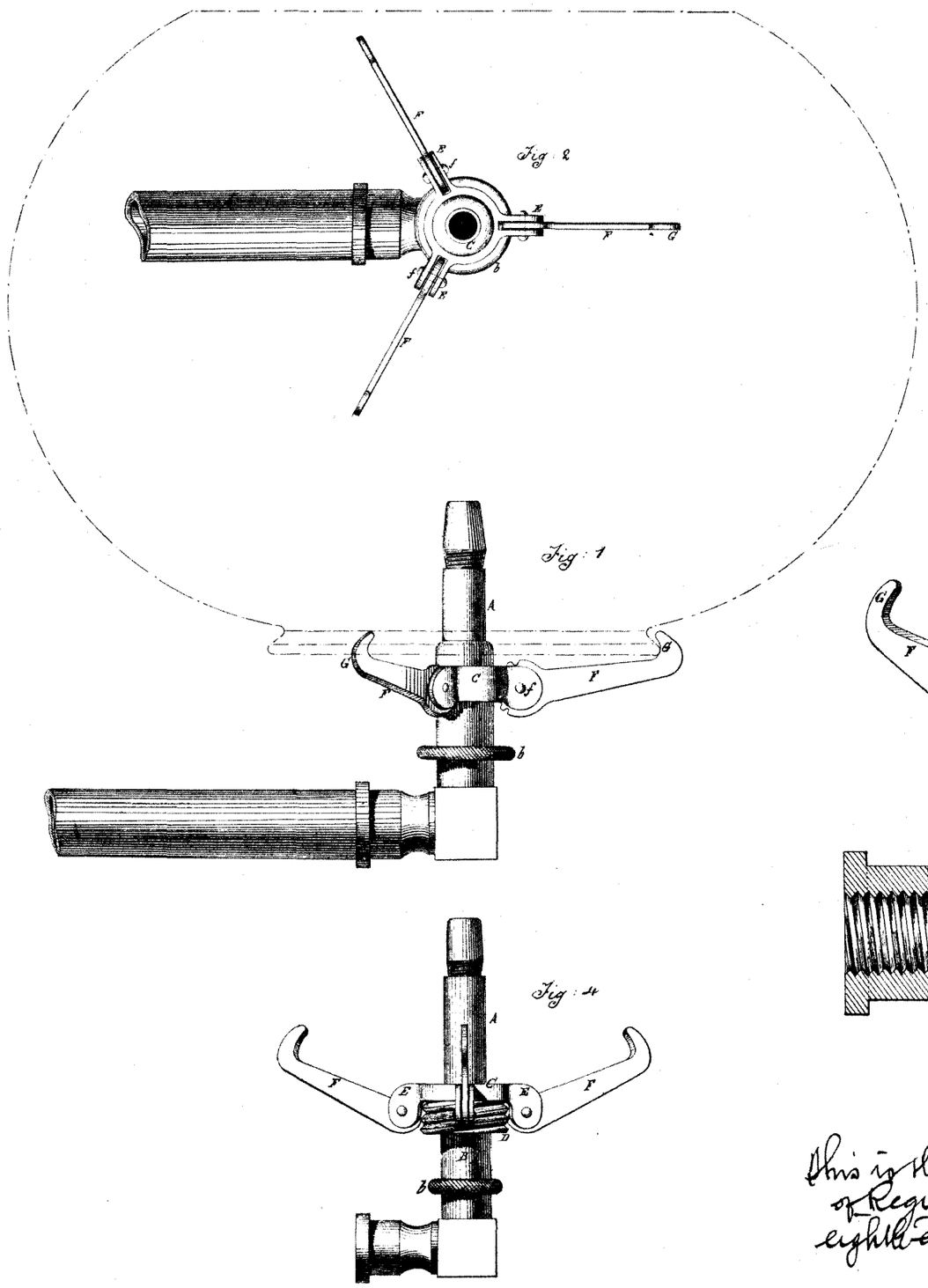

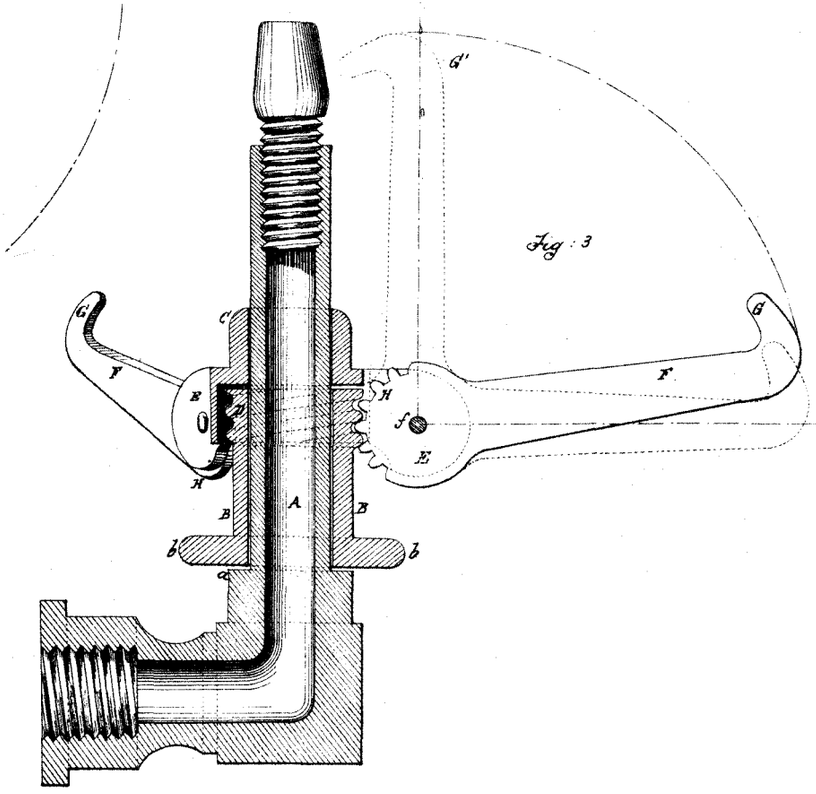

This is the Sheet of Drawings referred to in the annexed Letters of Registration granted to Joseph Breeden this twenty eighth day of May A.D. 1879

"Alfred Stephen"

(Sig: 198-)

PHOTO-LITHOGRAPHED AT THE GOVT. PRINTING OFFICE.
SYDNEY, NEW SOUTH WALES.

A.D. 1879, 11*th June*. No. 739.

COMPOSITION FOR THE PREVENTION OF INCRUSTATION IN BOILERS.

LETTERS OF REGISTRATION to Violet Louis and Ophelia Gee, for a new and useful Composition for the prevention of Incrustation in Boilers used in connection with steam-engines and otherwise.

[Registered on the 12th day of June, 1879, in pursuance of the Act 16 Vic. No. 24.]

BY His Excellency Sir Alfred Stephen, Knight Commander of the Most Distinguished Order of Saint Michael and Saint George, and a Companion of the Most Honorable Order of the Bath, Lieutenant-Governor of New South Wales.

TO ALL TO WHOM THESE PRESENTS SHALL COME, greeting :

WHEREAS Violet Louis, of Melbourne, engineer, and Ophelia Gee, of Newtown Road Sydney, in the Colony of New South Wales, have by their Petition humbly represented to me that they are the authors or designers of a certain invention or improvement in manufactures, that is to say, of an invention for "A new and useful Composition for the prevention of Incrustation in Boilers used in connection with steam-engines and otherwise," which is more particularly described in the specification and particulars which is hereunto annexed ; and that they, the said Petitioners, have deposited with the Honorable the Treasurer of the said Colony of New South Wales the sum of Twenty Pounds sterling, for defraying the expense of granting these Letters of Registration, as required by the Act of Council, sixteenth Victoria, number twenty-four ; and have humbly prayed that I would be pleased to grant Letters of Registration, whereby the exclusive enjoyment and advantage of the said invention or improvement might be secured to them for a period of fourteen years : And I, being willing to give encouragement to all inventions and improvements in the arts or manufactures which may be for the public good, and having received a report favourable to the prayer of the said Petition, from competent persons appointed by me to examine and consider the matters stated therein and to report thereon for my information, am pleased, with the advice of the Executive Council, and in exercise of the power and authority given to me by the said Act of Council, to grant, and do by these Letters of Registration grant unto the said Violet Louis and Ophelia Gee, their executors, administrators, and assigns, the exclusive enjoyment and advantage of the said invention or improvement, for and during the term of fourteen years from the date hereof ; to have, hold, and exercise unto the said Violet Louis and Ophelia Gee, their executors, administrators, and assigns, the exclusive enjoyment and advantage thereof, for and during and unto the full end and term of fourteen years from the date of these presents next and immediately ensuing, and fully to be complete and ended : Provided always, that if the said Violet Louis and Ophelia Gee shall not, within three days after the granting of these Letters of Registration, register the same in the proper office in the Supreme Court, at Sydney, in the said Colony of New South Wales, then these Letters of Registration, and all advantages whatsoever hereby granted, shall cease and become void.

In witness whereof, I have hereunto set my sign manual, and have caused the present Letters of Registration to be sealed with the seal of the said Colony of New South Wales, at Government House, Sydney, in New South Wales, this eleventh day of June, in the year of our Lord one thousand eight hundred and seventy-nine.

[L.S.] ALFRED STEPHEN,
Lieutenant-Governor,
Administering the Government of the said Colony.

A.D. 1879. No. 739.

Composition for the prevention of Incrustation in Boilers.

SPECIFICATION and particulars of an invention by VIOLET LOUIS and OPHELIA GEE for a new and useful Composition for the prevention of Incrustation in Boilers used in connection with steam-engines and others.

THE process of manufacturing this composition, the materials used in connection therewith, and the mode in which the same is applied, is particularly described and ascertained in and by the following statement, that is to say:—Our invention consists in producing a composition for the purposes above mentioned, composed of wattle-bark such as is used for tanning purposes, or other equivalent material, infused in boiling water, with the addition of gum arabic or other equivalent material, in the manner and in the proportions following:—Upon two hundredweight of crushed wattle bark or other material as aforesaid, pour 50 gallons of boiling water in a tub or other suitable receptacle, and after the liquid so produced has been infused for about one hour, put 10 pounds of gum arabic or other equivalent as aforesaid into it, so that when it is cold it will remain of a specific gravity of about five degrees, when it will be ready for use. When the liquid is to be employed for the purposes set forth, it can be introduced into the boiler (all feed-pipes being first closed and kept so during the operation of the disincrustant), by infection or otherwise, either through the man-hole or condenser, in the following quantities:—For every boiler capable of producing steam from sixty to one hundred horse power, five gallons on the first day of using the composition, and on every subsequent day whilst the boiler is in use, five or six quarts. After the introduction of the composition into the boiler as above stated, it is essential to take notice of the colour of the liquid in the water gauge, which will almost immediately after have a brownish tint; and when the liquid resumes its original colour, it shows that the composition has done its work, and must then be from time to time renewed as above. No other material beyond those above mentioned must be employed while the composition is being used.

When the composition is first used, it will naturally tend to increase the priming, but this will gradually disappear in the course of a day or two, or as soon as the deposit in the bottom has been removed by its action. In the case of boilers producing or capable of producing steam equal to from 150 to 200 horse power, 8 gallons of the composition will be sufficient for the first day's use, and on succeeding days a quantity in proportion to that above mentioned in respect of 100-horse power boilers. The density of the water may with safety be increased to $\frac{5}{20}$ rds.

Having thus described the nature of our invention and the manner of performing the same, we would have it understood that we do not confine ourselves to precise details so long as the character of our invention is maintained, and that we do not claim the exclusive use of wattle bark and gum arabic or either of them; but what we do claim as our invention, for which we desire to obtain Letters of Registration, is the combined use of wattle bark or other equivalent material in combination with gum arabic or other equivalent material, for the purpose of preventing incrustation in boilers, in the manner and proportions hereinbefore substantially set forth.

VIOLET LOUIS.
OPHELIA GEE.

12th May, 1879.

This is the specification and particulars referred to in the annexed Letters of Registration granted to Violet Louis and Ophelia Gee, this eleventh day of June, in the year of our Lord one thousand eight hundred and seventy-nine.

ALFRED STEPHEN,

REPORTS.

Sir,

Sydney, 20 May, 1879.

We do ourselves the honor to state that, on examination of Violet Louis and Ophelia Gee's Petition, specification, and claim for "a new and useful Composition for the prevention of Incrustation in Boilers used in connection with steam-engines and otherwise," transmitted for our report under your blank cover communication of the 15th instant, No. 3,633, we see no objection to the issue of Letters of Registration as desired.

We have, &c.,
GOTHER K. MANN.
H. BRODERICK.

The Principal Under Secretary.

Sir,

Sydney, 7 July, 1879.

We do ourselves the honor to acknowledge the receipt of your blank cover communication transmitting for our report Violet Louis and Ophelia Gee's letter of the 4th instant, with reference to their registration, and that of Messrs. Boison and Coutonly for the prevention of incrustation and corrosion in steam boilers; and we have to state that our recommendations were made after a careful comparison and examination of the specification and claims in question, and that we see no reason to depart from the opinions arrived at by us, and transmitted in our former reports.

We have, &c.,
GOTHER K. MANN.
H. BRODERICK.

The Principal Under Secretary.

A.D. 1879, *2nd July.* No. 740.

MACKENZIE'S EJECTOR VACUUM PAN.

LETTERS OF REGISTRATION to Alexander Richard Mackenzie, for an Invention called "Mackenzie's Ejector Vacuum Pan."

[Registered on the 3rd day of July, 1879, in pursuance of the Act 16 Vic. No. 24.]

BY HIS EXCELLENCY SIR ALFRED STEPHEN, Knight Commander of the Most Distinguished Order of Saint Michael and Saint George, and a Companion of the Most Honorable Order of the Bath, Lieutenant-Governor of New South Wales.

TO ALL TO WHOM THESE PRESENTS SHALL COME, greeting:

WHEREAS ALEXANDER RICHARD MACKENZIE, of Mackay, in the Colony of Queensland, hath by his Petition humbly represented to me that he is the author or designer of a certain invention or improvement in manufactures, that is to say, of an invention called "Mackenzie's Ejector Vacuum Pan," which is more particularly described in the specification and the sheet of drawings which are hereunto annexed; and that he, the said Petitioner, hath deposited with the Honorable the Treasurer of the said Colony of New South Wales the sum of Twenty Pounds sterling, for defraying the expense of granting these Letters of Registration, as required by the Act of Council, sixteenth Victoria, number twenty-four; and hath humbly prayed that I would be pleased to grant Letters of Registration, whereby the exclusive enjoyment and advantage of the said invention or improvement might be secured to him for a period of fourteen years: And I, being willing to give encouragement to all inventions and improvements in the arts or manufactures which may be for the public good, and having received a report favourable to the prayer of the said Petition, from competent persons appointed by me to examine and consider the matters stated therein and to report thereon for my information, am pleased, with the advice of the Executive Council, and in exercise of the power and authority given to me by the said Act of Council, to grant, and do by these Letters of Registration grant unto the said Alexander Richard Mackenzie, his executors, administrators, and assigns, the exclusive enjoyment and advantage of the said invention or improvement, for and during the term of fourteen years from the date hereof; to have, hold, and exercise unto the said Alexander Richard Mackenzie, his executors, administrators, and assigns, the exclusive enjoyment and advantage thereof for and during and unto the full end and term of fourteen years from the date of these presents next and immediately ensuing, and fully to be complete and ended: Provided always, that if the said Alexander Richard Mackenzie shall not, within three days after the granting of these Letters of Registration, register the same in the proper office in the Supreme Court, at Sydney, in the said Colony of New South Wales, then these letters of Registration, and all advantages whatsoever hereby granted, shall cease and become void.

In witness whereof, I have hereunto set my sign manual, and have caused the present Letters of Registration to be sealed with the seal of the said Colony of New South Wales, at Government House, Sydney, in New South Wales, this second day of July, in the year of our Lord one thousand eight hundred and seventy-nine.

[L.S.] ALFRED STEPHEN,
Lieutenant-Governor,
Administering the Government of the said Colony.

Mackenzie's Ejector Vacuum Pan.

SPECIFICATION of an invention by ALEXANDER RICHARD MACKENZIE, called "Mackenzie's Ejector Vacuum Pan."

Firstly—What my invention consists of is the use of a steam ejector for the purpose of securing a partial vacuum in any pan or column used for the purpose of reducing, clarifying, or evaporating sugar-cane or beetroot juice, with or without the admission of gas or atmospheric air at ordinary atmospheric pressure, through the juice to be reduced, clarified, or evaporated, for the purpose of more economically or effectually doing the same.

Secondly—The use of curved corrugated plate iron in the formation of pans or columns used for the purpose of reducing, clarifying, or evaporating, while in a partial vacuum, sugar-cane or beetroot juice.

Thirdly—The using, for the purpose of heating the juice contained in the pan or column, the exhaust steam from the ejector, by passing it either through an internal coil pipe coiled inside the pan or through a steam jacket external to the pan, or through both coil and jacket; this exhaust steam being a mixture of the high pressure steam (preferably super-heated to say 500 degrees Fahrenheit) which operates the ejector, and the vapour and air extracted by the ejector from the contents of the pan.

To further explain this invention a drawing is annexed of the apparatus which I call an "Ejector Vacuum Pan," of which the following is a description:—

The figure marked A, shown partly in elevation and partly in section, is the pan or column containing the juices to be evaporated or otherwise treated in partial vacuum. It is made with the sides corrugated circumferentially, to give, with lightness, strength or stiffness against any tendency to collapse. The top and bottom ends are dished or domed for the same purpose. Other forms of the pan may be used if convenient, but the above form I consider an improved form as regards lightness, strength, and cost of construction.

The figure marked B is a trap, which is ordinarily used to catch any juice that may boil over with the vapour passing from the pan through the pipe or gooseneck C. Any juice caught in the trap can be returned to the pan by the pipe marked D, which is usually supplied for that purpose.

The figure marked E, shown in section, is the steam ejector supplied by the pipe F with high pressure steam, preferably superheated. This steam passing into the annular space round the central nozzle, rushes with force past the mouth of said nozzle into the exhaust pipe H; this causes an induced current to flow down the centre nozzle, which is connected by pipe I to the trap or gooseneck on the pan, thus drawing off any vapour or air contained in the pan. A back pressure valve is shown placed in the pipe I, to prevent the readmission of any air or steam to the pan when the ejector is stopped from working.

The exhaust steam mixed with the vapour and air extracted from the pan passes down the pipe marked J into the coil K in the inside of the pan, shown by the pan being partly in section, after which the steam is allowed to flow freely into the tank holding water used to supply the boiler with feedwater.

In the exhaust pipe J is placed a three-way cock, L, connecting with pipe M, also leading to surface of feedwater tank; this pipe is used only when the ejector is working to form a vacuum preparatory to filling the pan, as it is not advisable that the internal coil be heated when it is not covered by the syrup or juices to be treated in the pan.

The figure marked N is the discharge valve of the pan.

The pipe marked O is for charging the pan with syrup or juice, which is drawn up by the partial vacuum in the pan.

The figure marked P is the lid or man-hole cover, which rests in a groove faced to fit air-tight with bottom edge of man-hole lid or cover.

Firstly—What I claim for my invention is the use of a steam ejector for the purpose of securing a partial vacuum in any pan or column used for evaporating, reducing, or clarifying cane or beetroot juice or syrup. The ejector may be of any approved form, as for example with single annular steam jet as shown in drawing, or with centre and outer annular steam jets, an intermediate annular jet being provided for emission of air or vapour from pan.

Secondly—The use of plates corrugated circumferentially for the construction of pans or columns used for evaporating, reducing, or clarifying sugar-cane or beetroot juice or syrup in partial vacuum.

Thirdly—The use of the exhaust steam from the ejector mixed or combined with the vapour extracted by the ejector from the contents of the pan for the purpose of heating the steam coil or jacket of the pan.

ALEXANDER RICHARD MACKENZIE.

This is the specification referred to in the annexed Letters of Registration granted to Alexander Richard Mackenzie, this second day of July, A.D. 1879.

ALFRED STEPHEN.

Mackenzie's Ejector Vacuum Pan.

REPORTS.

Sir, Sydney, 17 April, 1879.

In the matter of the application of Mr. Alexander R. Mackenzie, through his agent Mr. John Maclaren, for Letters of Registration for a steam ejector, &c., which has been referred to us, we have the honor to report that the specification and drawings are not sufficiently full and clear for the thorough understanding of this invention; and we have also to point out that it is very desirable that a short title should be given for the invention, and that the specification should conclude with a distinct "claim" of what is considered its characteristic novelty; we therefore return the papers for amendment.

We have, &c.,
J. SMITH.
CHAS. WATT.

The Principal Under Secretary.

Sir, Sydney, 4 June, 1879.

In the matter of the application of Mr. Alexander R. Mackenzie for Letters of Registration for "Mackenzie's Ejector Vacuum Pan," on which we reported, under date 17 April, that the specification was insufficient, we have the honor to report further that with the amended specification now before us we see no objection to the issue of Letters of Registration as prayed for.

We have, &c.,
J. SMITH.
CHAS. WATT.

The Principal Under Secretary.

[Drawings—one sheet.]

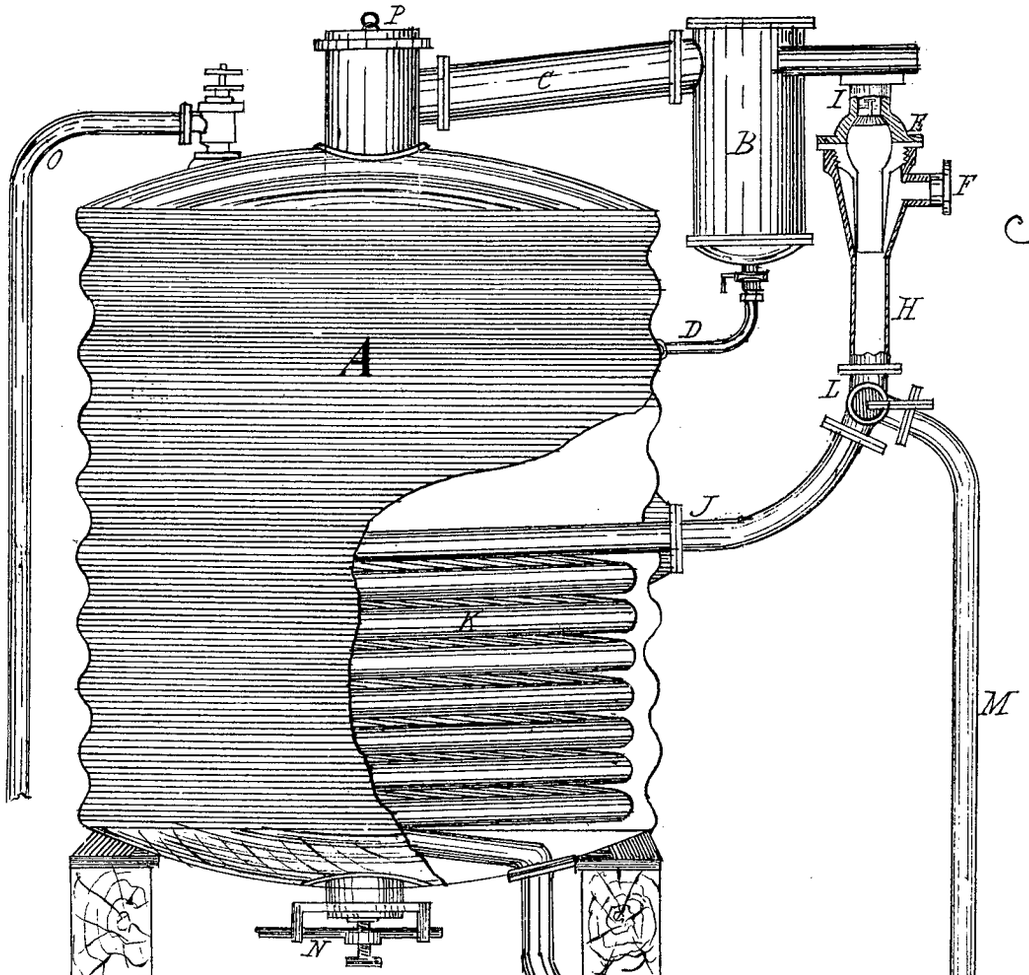

Mackenzie's Patent
EJECTOR VACUUM PAN

Scale, ½ an Inch to a Foot

This is the Sheet of Drawings referred to in the annexed Letters of Registration granted to Alexander Richard Mackenzie, this second day of July, A.D., 1879.

Alfred Stephen

(Sig. 198)

A.D. 1879, *2nd July.* No. 741.

A METHOD OF CONSOLIDATING CAMPHOR BY PRESSURE.

LETTERS OF REGISTRATION to Frederick William Elliott, for a method of consolidating Camphor by pressure.

[Registered on the 3rd day of July, 1879, in pursuance of the Act 16 Vic. No. 24.]

BY HIS EXCELLENCY SIR ALFRED STEPHEN, Knight Commander of the Most Distinguished Order of Saint Michael and Saint George, and a Companion of the Most Honorable Order of the Bath, Lieutenant-Governor of New South Wales.

TO ALL TO WHOM THESE PRESENTS SHALL COME, greeting:

WHEREAS FREDERICK WILLIAM ELLIOTT, of Sydney, in the Colony of New South Wales, druggist, hath by his Petition humbly represented to me that he is the author or designer of a certain invention or improvement in manufactures, that is to say, of an invention of "A method of consolidating Camphor by pressure," which is more particularly described in the specification which is hereunto annexed; and that he, the said Petitioner, hath deposited with the Honorable the Treasurer of the said Colony of New South Wales the sum of Twenty Pounds sterling, for defraying the expense of granting these Letters of Registration, as required by the Act of Council, sixteenth Victoria, number twenty-four; and hath humbly prayed that I would be pleased to grant Letters of Registration, whereby the exclusive enjoyment and advantage of the said invention or improvement might be secured to him for a period of fourteen years: And I, being willing to give encouragement to all inventions and improvements in the arts or manufactures which may be for the public good, and having received a report favourable to the prayer of the said petition, from competent persons appointed by me to examine and consider the matters stated therein and to report thereon for my information, am pleased, with the advice of the Executive Council, and in exercise of the power and authority given to me by the said Act of Council, to grant, and do by these Letters of Registration grant unto the said Frederick William Elliott, his executors, administrators, and assigns, the exclusive enjoyment and advantage of the said invention or improvement, for and during the term of fourteen years from the date hereof; to have, hold, and exercise unto the said Frederick William Elliott, his executors, administrators, and assigns, the exclusive enjoyment and advantage thereof, for and during and unto the full end and term of fourteen years from the date of these presents next and immediately ensuing, and fully to be complete and ended: Provided always, that if the said Frederick William Elliott shall not, within three days after the granting of these Letters of Registration, register the same in the proper office in the Supreme Court, at Sydney, in the said Colony of New South Wales, then these Letters of Registration, and all advantages whatsoever hereby granted, shall cease and become void.

In witness whereof, I have hereunto set my sign manual, and have caused the present Letters of Registration to be sealed with the seal of the said Colony of New South Wales, at Government House, Sydney, in New South Wales, this second day of July, in the year of our Lord one thousand eight hundred and seventy-nine.

[L.S.] ALFRED STEPHEN,
Lieutenant-Governor,
Administering the Government of the said Colony.

A.D. 1879. No. 741.

A method of consolidating Camphor by pressure.

SPECIFICATION of method of consolidating Camphor by pressure.

Consists in the employment of moulds of any convenient size or shape into which the broken camphor is placed.

It is then subjected to either hydraulic or other powerful pressure, by which it is made into solid blocks.

I claim as my invention the utilising of broken camphor by pressing the same into solid blocks by the application of mechanical power, whether hydraulic, screw, or otherwise.

Also the consolidation of sublimed camphor by process as above, rendering it more solid and durable.

F. W. ELLIOTT.

This is the specification referred to in the annexed Letters of Registration granted to Frederick William Elliott, this second day of July, A.D. 1879.

ALFRED STEPHEN.

REPORT.

Sir,

Sydney, 4 June, 1879.

We do ourselves the honor to return the papers having reference to the application of Mr. Frederick William Elliott for Letters of Registration for "A method of consolidating Camphor by pressure," forwarded to us for report.

Having read the specification in question, we see no objection to the issue of Letters of Registration to the applicant.

We have, &c.,
CHAS. WATT.
ROBERT GEO. MASSIE.

The Principal Under Secretary

A.D. 1879, *2nd July.* No. 742.

IMPROVEMENTS IN RAILS AND CHAIRS FOR TRAMWAYS, AND IN THE METHOD OF LAYING THEM.

LETTERS OF REGISTRATION to Samuel Aldred and — Spielmann, for Improvements in Rails and Chairs for Tramways, and in the method of laying them.

[Registered on the 3rd day of July, 1879, in pursuance of the Act 16 Vic. No. 24.]

BY His Excellency Sir Alfred Stephen, Knight Commander of the Most Distinguished Order of Saint Michael and Saint George, and a Companion of the Most Honorable Order of the Bath, Lieutenant-Governor of New South Wales.

TO ALL TO WHOM THESE PRESENTS SHALL COME, greeting:

WHEREAS Samuel Aldred and — Spielmann, of Nos. 40 and 42, Queen Victoria-street, London, in England, engineers (who are said to be trading together as engineers, under the style or firm of "Aldred & Spielmann"), have by their Petition humbly represented to me that they are the authors or designers of a certain invention or improvement in manufactures, that is to say, of an invention intituled "Improvements in Rails and Chairs for Tramways, and in the method of laying them," which is more particularly described in the specification and the sheet of drawings which are hereunto annexed; and that they, the said Petitioners, have deposited with the Honorable the Treasurer of the said Colony of New South Wales the sum of Twenty Pounds sterling, for defraying the expense of granting these Letters of Registration, as required by the Act of Council, sixteenth Victoria, number twenty-four; and have humbly prayed that I would be pleased to grant Letters of Registration, whereby the exclusive enjoyment and advantage of the said invention or improvement might be secured to them for a period of fourteen years: And I, being willing to give encouragement to all inventions and improvements in the arts or manufactures which may be for the public good, and having received a report favourable to the prayer of the said Petition, from competent persons appointed by me to examine and consider the matters stated therein, and to report thereon for my information, am pleased, with the advice of the Executive Council, and in exercise of the power and authority given to me by the said Act of Council, to grant, and do by these Letters of Registration grant unto the said Samuel Aldred and — Spielmann, their executors, administrators, and assigns, the exclusive enjoyment and advantage of the said invention or improvement, for and during the term of fourteen years from the date hereof; to have, hold, and exercise unto the said Samuel Aldred and — Spielmann, their executors, administrators, and assigns, the exclusive enjoyment and advantage thereof, for and during and unto the full end and term of fourteen years from the date of these presents next and immediately ensuing, and fully to be complete and ended: Provided always, that if the said Samuel Aldred and — Spielmann shall not, within three days after the granting of these Letters of Registration, register the same in the proper office in the Supreme Court, at Sydney, in the said Colony of New South Wales, then these Letters of Registration, and all advantages whatsoever hereby granted, shall cease and become void.

In witness whereof, I have hereunto set my sign manual, and have caused the present Letters of Registration to be sealed with the seal of the said Colony of New South Wales, at Government House, Sydney, in New South Wales, this second day of July, in the year of our Lord one thousand eight hundred and seventy-nine.

[L.S.] ALFRED STEPHEN,
Lieutenant-Governor,
Administering the Government of the said Colony.

Improvements in Rails and Chairs for Tramways, and in the method of laying them.

SPECIFICATION of SAMUEL ALDRED and — SPIELMANN, of Nos. 40 and 42, Queen Victoria-street, London, in England, engineers, for an invention intituled "Improvements in Rails and Chairs for Tramways, and in the method of laying them."

THIS invention consists, first, in certain improvements in rails for tramways. These rails are formed with a double head made up of two similar sections, with a broad head at one edge and a narrow head at the other, and united by a web, with one side considerably inclined from the perpendicular axis of the half rail. The broad head of one-half rail is used for the tread, and the other half rail is reversed with the narrow head uppermost, which thus acts as a guard for the tread. The two inclined surfaces come together, and when the pressure is brought upon the head of the one-half it is communicated through such surfaces to the other half.

The improvement in chairs consists in constructing them with a recess on one side to receive half the thickness of the keys, which hold the rails in their places, and with a projection on the opposite side to fit into a corresponding recess in that half of the rail.

The improvement in laying the rails consists in their being so laid as to keep them in a suspended position, so that when reversing is required the under face of the rail is perfectly free from burr or damage, and in the joints of the rails being broken in the chairs and then only half in one place.

Referring to the drawings hereto attached, figure 1 shows section of this improved rail and chair, and the method of laying them. Figure 2, plan, and figure 3, elevation. A and A^1 are the two halves of the rail—the former acting as the tread, and the latter as the guard rail. B is the key, C the chair; C^1 the recess therein for the key, and C^2 the projection thereon for fitting into the recess in the guard rail.

The object in dividing the rail as shown is to facilitate its laying down and taking up when relaying is required without having to cut up the roadway. The rails being reversible can be used till both sides are quite worn down, the reversing taking place without interfering with the road paving, and either half can be renewed without the other. It will be noticed also that the rails require no punching, and consequently no fastenings.

The precise gauge of the line is assisted throughout and the rails and paving are kept to the same level by the use of cross sleepers, which are better adapted for this system; but longitudinal sleepers, bowl sleepers (for soft ground), and concrete blocks can be used.

By using low or pedestal chairs the system is adapted for asphalt, macadamised, wood, or granite paved roads. The rails are rolled in iron or steel of any required weight, so as to suit either light or heavy tramways, or light railroads.

We claim—

The construction of reversible rails in two parts in the peculiar manner shown, the peculiar construction of the chairs for supporting such rails, and the special method of laying such rails so as to suspend them, and so as that the joints of the rails are broken in the chairs, and then only half in one place, substantially as herein described and explained.

This is the specification referred to in the annexed Letters of Registration granted to Samuel Aldred and — Spielmann, this second day of July, A.D. 1879.

ALFRED STEPHEN.

REPORT.

Sydney, 24 April, 1879.

Sir,

We do ourselves the honor to state that we see no objection to the issue of Letters of Registration, in accordance with Messrs. Aldred and Spielmann's Petition, specification, drawings, and claim, for their "Improvements in Rails and Chairs for Tramways, and in the method of laying them," transmitted for our report under your blank cover communication of the 10th instant, No. 2,700.

We have, &c.,

GOTHER K. MANN.
JOHN WHITTON.

The Principal Under Secretary.

[Drawings—one sheet.]

Scale.

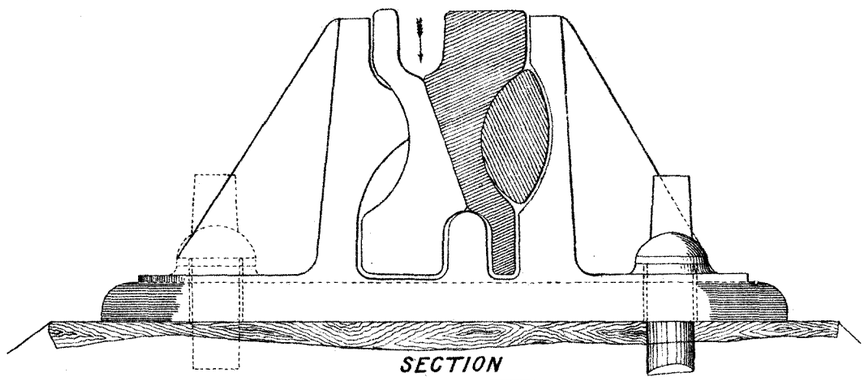

SECTION

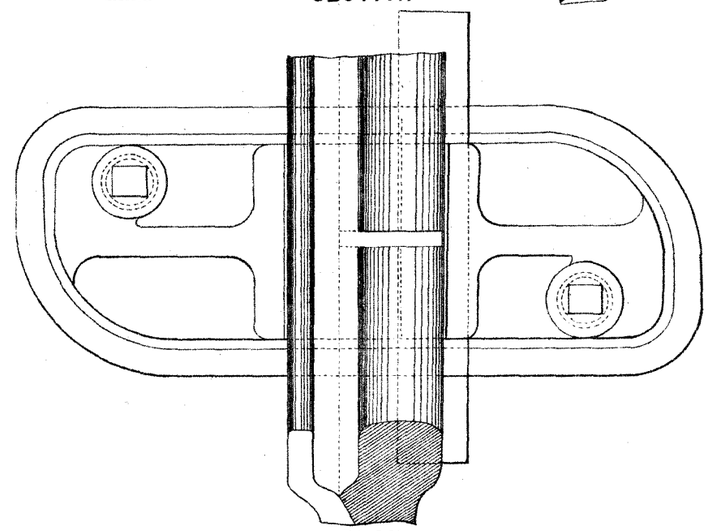

PLAN

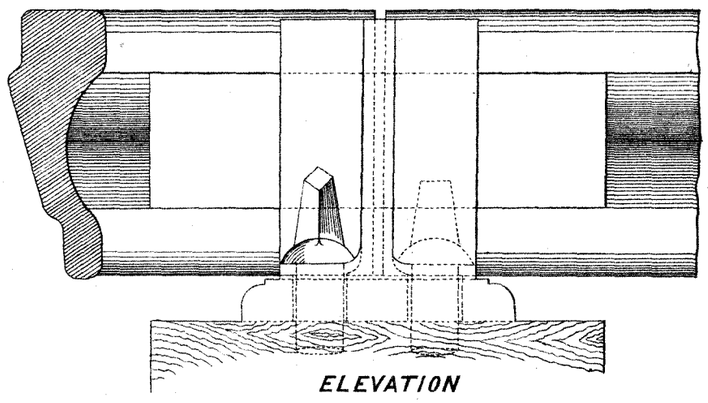

ELEVATION

ALDRED & SPIELMANN'S
PATENT TRAMWAYS

PLAN

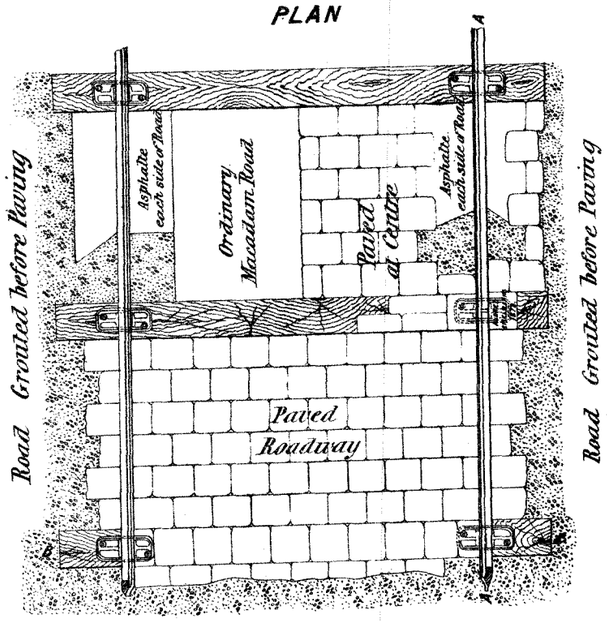

LONGITUDINAL SECTION

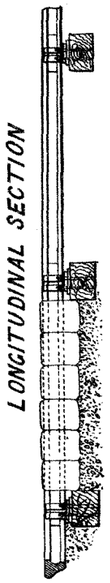

CROSS SECTION.
Thro' B.B.

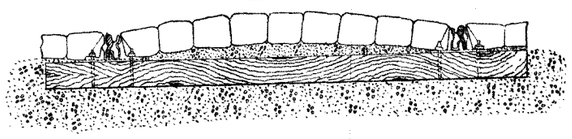

Scale.



This is the Sheet of Drawings referred to in the annexed Letters of Registration granted to Samuel Aldred and —— Spielmann this second day of July A.D. 1879.

Alfred Stephen.

PHOTO-LITHOGRAPHED AT THE GOVT. PRINTING OFFICE, SYDNEY, NEW SOUTH WALES.

A.D. 1879, 2*nd July*. No. 743.

IMPROVEMENTS IN THE CONSTRUCTION OF EXCAVATING MACHINES.

LETTERS OF REGISTRATION to Samuel McCaughey, for Improvements in the construction of Excavating Machines.

[Registered on the 3rd day of July, 1879, in pursuance of the Act 16 Vic. No. 24.]

BY HIS EXCELLENCY SIR ALFRED STEPHEN, Knight Commander of the Most Distinguished Order of Saint Michael and Saint George, and a Companion of the Most Honorable Order of the Bath, Lieutenant-Governor of New South Wales.

TO ALL TO WHOM THESE PRESENTS SHALL COME, greeting:

WHEREAS SAMUEL M'CAUGHEY, of Coonong, Urana, in the Colony of New South Wales, hath by his Petition humbly represented to me that he is the author or designer of a certain invention or improvement in manufactures, that is to say, of an invention intituled "Improvements in the construction of Excavating Machines," which is more particularly described in the specification and the sheet of drawings which are hereunto annexed; and that he, the said Petitioner, hath deposited with the Honorable the Treasurer of the said Colony of New South Wales the sum of Twenty Pounds sterling, for defraying the expense of granting these Letters of Registration, as required by the Act of Council, sixteenth Victoria, number twenty-four; and hath humbly prayed that I would be pleased to grant Letters of Registration, whereby the exclusive enjoyment and advantage of the said invention or improvement might be secured to him for a period of fourteen years: And I, being willing to give encouragement to all inventions and improvements in the arts or manufactures which may be for the public good, and having received a report favourable to the prayer of the said Petition, from competent persons appointed by me to examine and consider the matters stated therein and to report thereon for my information, am pleased, with the advice of the Executive Council, and in exercise of the power and authority given to me by the said Act of Council, to grant, and do by these Letters of Registration grant unto the said Samuel M'Caughey, his executors, administrators, and assigns, the exclusive enjoyment and advantage of the said invention or improvement, for and during the term of fourteen years from the date hereof; to have, hold, and exercise unto the said Samuel M'Caughey, his executors, administrators, and assigns, the exclusive enjoyment and advantage thereof, for and during and unto the full end and term of fourteen years from the date of these presents next and immediately ensuing, and fully to be complete and ended: Provided always, that if the said Samuel M'Caughey shall not, within three days after the granting of these Letters of Registration, register the same in the proper office in the Supreme Court, at Sydney, in the said Colony of New South Wales, then these Letters of Registration, and all advantages whatsoever hereby granted, shall cease and become void.

In witness whereof, I have hereunto set my sign manual, and have caused the present Letters of Registration to be sealed with the seal of the said Colony of New South Wales, at Government House, Sydney, in New South Wales, this second day of July, in the year of our Lord one thousand eight hundred and seventy-nine.

[L.S.] ALFRED STEPHEN,
Lieutenant-Governor,
Administering the Government of the said Colony.

Improvements in the construction of Excavating Machines.

SPECIFICATION of SAMUEL M'CAUGHEY, of Coonong, Urana, in the Colony of New South Wales, for an invention intituled "Improvements in the construction of Excavating Machines."

THIS invention has been designed for the purpose of producing an efficient machine for excavating loose earth, or earth that has been ploughed, and is not designed for excavating stiff unploughed soil.

This machine consists of a common excavator or scoop swung between a fore and a hind carriage. The fore-carriage is made exactly the same as the fore-carriage of a machine described in the specification of an invention entitled "Improvements in Excavating Machines," for which I obtained New South Wales Letters of Registration, dated the seventh day of August, one thousand eight hundred and seventy-five, save and except that the excavating scoop is removed; and the hind-carriage is simply two wheels running on one axle. The framing, however, which supports the scoop in my present invention is of peculiar construction, being so made as to automatically adjust itself whilst the said scoop is emptying itself by turning over. This will be clearly understood on reference to the drawings hereto attached, where figure 1 shows side elevation of an excavating machine made according to my present invention, and figure 2 a similar view showing the scoop in two positions while turning over. Figure 3 shows plan, and figure 4 front elevation thereof. Figure 5 is detail of the catch hereinafter referred to. A is an ordinary earth scoop, on which are projecting points, A^1, for assisting it to right itself when turning over. A^2 are gudgeons carried in bearings A^3 in framing A^4, the fore part of which is hooked on to the fore-carriage at A^5, whilst at the hinder end is forked at A^6, and rests on the axle of the hind carriage except when the scoop is turning over. A^7 are radius bars to preserve the connection of the framing with the hind wheels whilst the scoop is turning over. A^8 are spring catches with handle A^9 for preventing the scoop from turning over while it is being filled. B B are the wheels, and B^1 the axle, which together constitute the hind-carriage. The framing of the scoop is hooked on to the fore-carriage at C, which is an eye at the bottom of a square iron frame curved at the sides, as shown in figure 1, and having rack teeth C^1 thereon, in which gear pinions C^2 on the axle C^3. C^4 is a clutch connection and C^5 a worm or screw-thread, also on such axle, and C^6 is a treadle, all working in precisely the same way as described in the specification of my hereinbefore recited Letters of Registration. C^7 is the pole, and C^8 the driver's seat. C^9 is the clutch lever.

The mode of operation is as follows:—Horses or oxen are attached to the machine (the former by preference) and driven to the ground where the earth is to be removed. Just as the scoop is approaching the earth to be removed the driver presses his foot on the treadle C^6 so as to allow the square iron framing to fall to its lowest point, and with it the mouth of the scoop and the foremost end of its framing. The scoop then rapidly fills by the onward motion of the machine. When filled the driver closes the clutch connection C^4 by lever C^9, and drives the machine in the direction of the place of deposit. This lifts the mouth of the scoop by means of the travel of the pinions C^2 in the racks C^1 until the highest point is reached, when the clutch connection automatically uncloses and the pinions are made fixtures by a pawl as described in the specification of my invention hereinbefore recited. When the place of deposit is reached the treadle C^6 is again pressed upon by the driver so as to allow the scoop to fall to its lowest point; the spring catch A^8 is forced out of gear by handle A^9, when the mouth of the scoop will catch the ground and commence to turn over, the hinder end of its framing rising from the axle B^1 as shown in figure 2. As the machine moves forward the scoop will make a complete revolution, being assisted therein by the spikes or projecting points A^2. When it returns to its normal position the spring catches are allowed to spring into their bearings, the clutch C^4 is again thrown into gear as before, and the machine driven to earth to be excavated, when the treadle is again pressed and the scoop refilled as before.

I find that by machines made according to this invention loose earth can be excavated and removed at a less cost than by any other excavator known to me.

I do not claim the fore-carriage of this machine by itself, because it forms part of an invention which I have previously patented, neither do I claim any originality in either the hind carriage or the scoop by themselves, but I claim the combination of the hind and fore carriage with the scoop, and specially with the scoop framing A^4 and radius bars A^7 in the manner and for the purpose substantially as herein described and explained.

This is the specification referred to in the annexed Letters of Registration granted to Samuel M'Caughey, this second day of July, A.D. 1879.

ALFRED STEPHEN.

REPORT.

Sydney, 6 June, 1879.

Sir,

On examination of Mr. Samuel M'Caughey's application for Letters of Registration for "Improvements in the construction of Excavating Machines," transmitted for our report under your blank cover communication of the 2nd instant, No. 4,081, we do ourselves the honor to state that we see no objection to the issue of the Letters of Registration prayed for, in terms of Mr. M'Caughey's Petition, specification, drawings, and claim.

We have, &c.,

GOTHER K. MANN.
JAMES BARNET.

The Principal Under Secretary.

[Drawings—one sheet.]

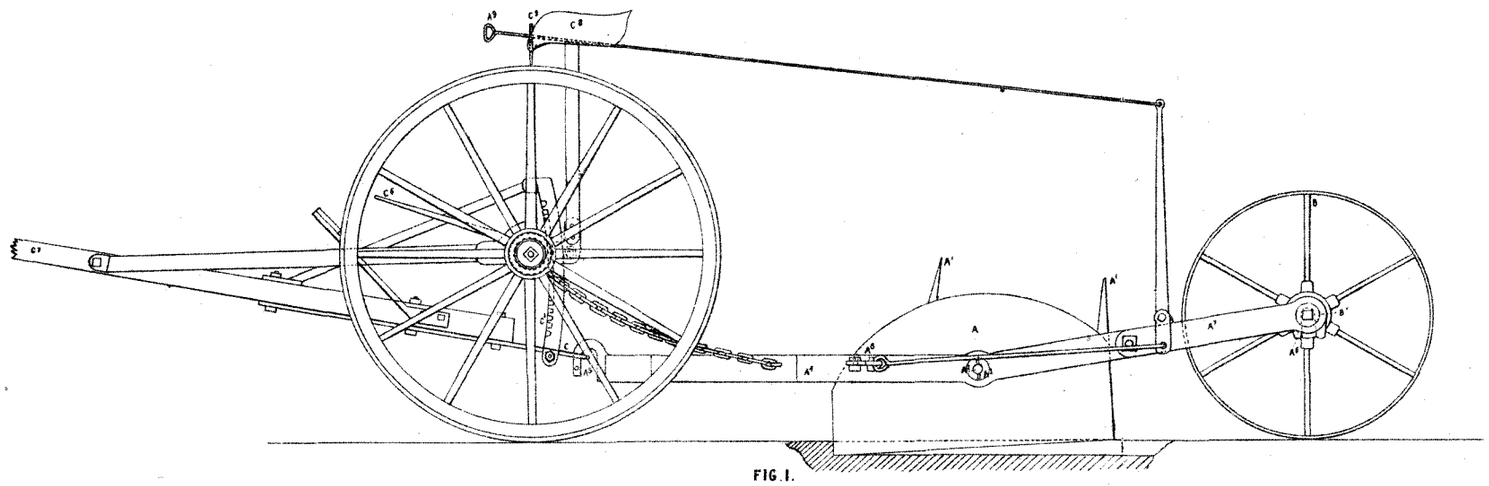

FIG. 1.

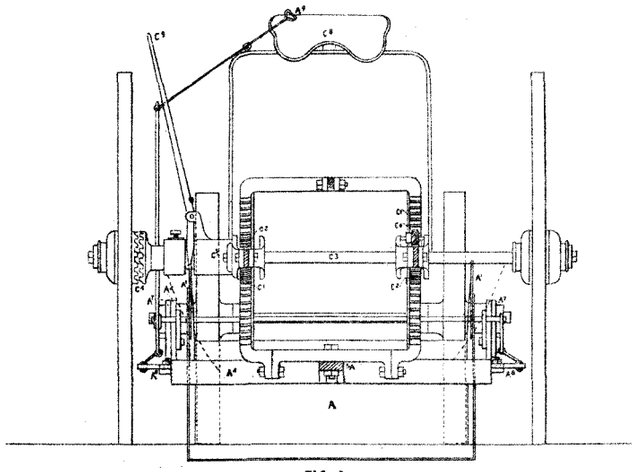

FIG. 4.

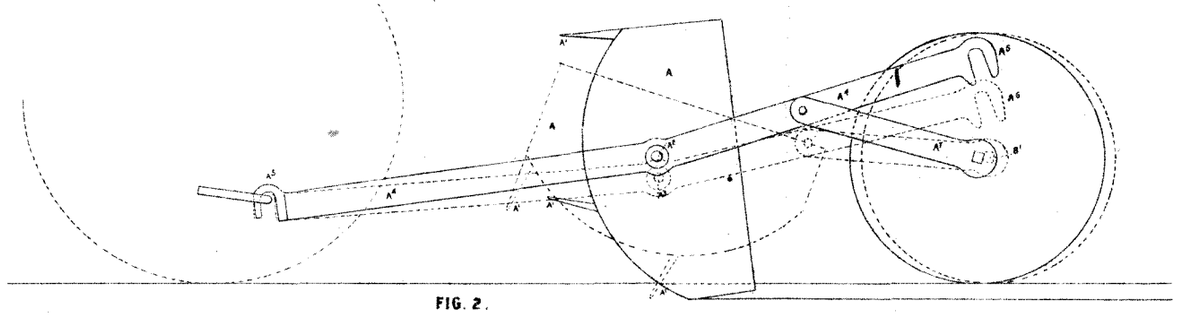

FIG. 2.

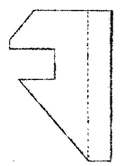

FIG 5.

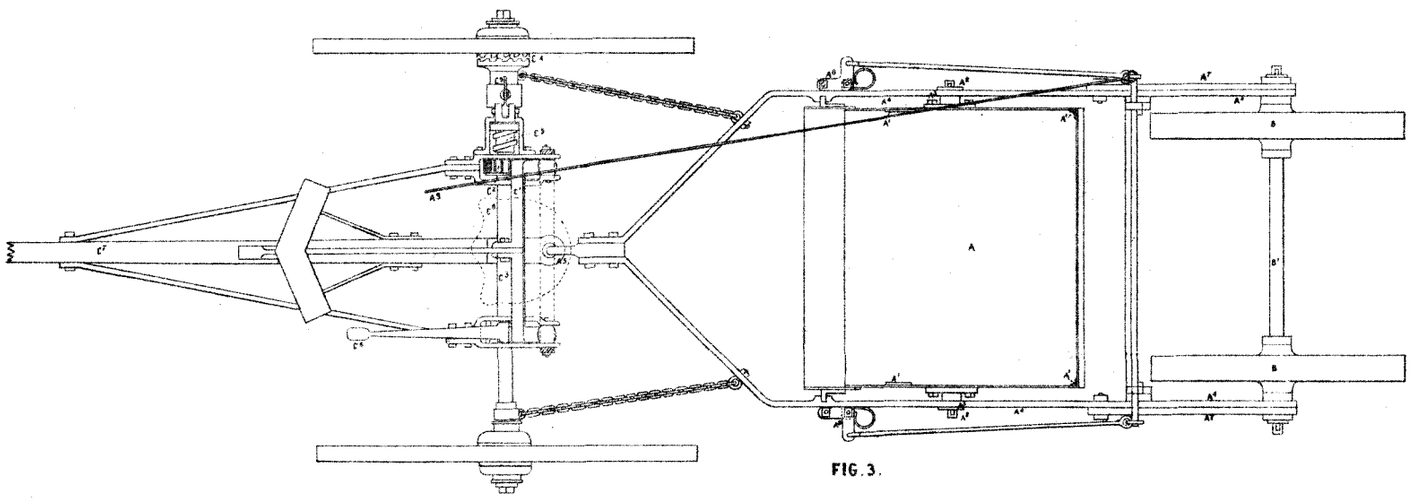

FIG. 3.

S.Mc CAUGHEY'S PATENT

This is the Sheet of Drawings referred to in the annexed Letters of Registration granted to Samuel McCaughey this Second day of July A.D. 1879.

(Sig: 198)

"Alfred Stephen"

PHOTO-LITHOGRAPHED AT THE GOVT. PRINTING OFFICE, SYDNEY, NEW SOUTH WALES.

A.D. 1879, *2nd July.* No. 744.

IMPROVEMENTS IN MACHINERY OR APPARATUS FOR WORKING OR INTERLOCKING POINTS AND SIGNALS ON RAILWAYS.

LETTERS OF REGISTRATION to Walter Holland, Samuel Telford Dutton, and Thomas Clunes, for Improvements in Machinery or Apparatus for working or interlocking Points and Signals on Railways.

[Registered on the 3rd day of July, 1879, in pursuance of the Act 16 Vic. No. 24.]

BY His Excellency Sir Alfred Stephen, Knight Commander of the Most Distinguished Order of Saint Michael and Saint George, and a Companion of the Most Honorable Order of the Bath, Lieutenant-Governor of New South Wales.

TO ALL TO WHOM THESE PRESENTS SHALL COME, greeting:

WHEREAS Walter Holland and Samuel Telford Dutton, both of the Vulcan Iron Works, in the city of Worcester, in England, and Thomas Clunes, of Fowey, in the county of Cornwall, in England, have by their Petition humbly represented to me that they are the authors or designers of a certain invention or improvement in manufactures, that is to say, of an invention entitled "Improvements in Machinery or Apparatus for working or interlocking Points and Signals on Railways," which is more particularly described in the specification, marked A, and the four sheets of drawings, marked B, C, D, and E, respectively, which are hereunto annexed; and that they, the said Petitioners, have deposited with the Honorable the Treasurer of the Colony of New South Wales the sum of Twenty Pounds sterling, for defraying the expense of granting these Letters of Registration, as required by the Act of Council, sixteenth Victoria, number twenty-four; and have humbly prayed that I would be pleased to grant Letters of Registration, whereby the exclusive enjoyment and advantage of the said invention or improvement might be secured to them for a period of fourteen years: And I, being willing to give encouragement to all inventions and improvements in the arts or manufactures which may be for the public good, and having received a report favourable to the prayer of the said Petition, from competent persons appointed by me to examine and consider the matters stated therein and to report thereon for my information, am pleased, with the advice of the Executive Council, and in exercise of the power and authority given to me by the said Act of Council, to grant, and do by these Letters of Registration grant unto the said Walter Holland, Samuel Telford Dutton, and Thomas Clunes, their executors, administrators, and assigns, the exclusive enjoyment and advantage of the said invention or improvement, for and during the term of fourteen years from the date hereof; to have, hold, and exercise unto the said Walter Holland, Samuel Telford Dutton, and Thomas Clunes, their executors, administrators, and assigns, the exclusive enjoyment and advantage thereof, for and during and unto the full end and term of fourteen years from the date of these presents next and immediately ensuing, and fully to be complete and ended: Provided always, that if the said Walter Holland, Samuel Telford Dutton, and Thomas Clunes shall not, within three days after the granting of these Letters of Registration, register the same in the proper office in the Supreme Court, at Sydney, in the said Colony of New South Wales, then these Letters of Registration, and all advantages whatsoever hereby granted, shall cease and become void.

In witness whereof, I have hereunto set my sign manual, and have caused the present Letters of Registration to be sealed with the seal of the said Colony of New South Wales, at Government House, Sydney, in New South Wales, this second day of July, in the year of our Lord one thousand eight hundred and seventy-nine.

[L.S.] ALFRED STEPHEN,
Lieutenant-Governor,
Administering the Government of the said Colony.

Improvements in Machinery or Apparatus for working or interlocking Points, &c.

A.

SPECIFICATION of WALTER HOLLAND and SAMUEL TELFORD DUTTON, both of the Vulcan Iron Works, in the city of Worcester, in England, and THOMAS CLUNES, of Fowey, in the county of Cornwall, in England, for an invention entitled "Improvements in Machinery or Apparatus for working or interlocking Points and Signals on Railways."

IN the method of constructing and arranging the parts of the said machinery or apparatus for actuating and interlocking points and signals on railways, described in the specification of Letters Patent for the United Kingdom of Great Britain and Ireland, granted on the 30th day of July, 1866, No. 1,963, to John M'Kenzie and two of the present applicants, the locking gear of the apparatus is placed behind the levers to be locked, and works upon the same axis as the cams on which the levers act to actuate the said locking gear.

In constructing and arranging the said machinery and apparatus according to our invention, we place the axis of the locks in front of the levers to be interlocked, the said locks working upon an independent axis. By this arrangement we obtain a much closer and firmer lock upon the levers in their normal position when those levers which lock them are moved quite over, that is, to the extent of their range of motion. By fixing the locks upon one axis and the actuating cams on another as described, greater room is obtained for the action of the locks than in the former arrangement. In consequence of the changed position of the locks, their forms, as well as those of the cams, differ from the forms of the former locks and cams, but their action is in principle essentially the same, the differences in form being such as the changed position of the axes on which they turn render necessary.

We maintain in balance the locks that are not self-acting by means of counterbalance weights, and thereby reduce the weight of the locks and gear upon the hand levers. The power required to work the apparatus is also thereby lessened and the friction of the working parts greatly reduced. In order to facilitate the removal and replacement of the levers, cams, and locks, we connect the said parts with their axes by means of a joint formed as follows:—The end of the lever, cam, or lock has a semi-circular depression made in it; this depression fits in a neck or groove turned in the axis, and is held thereto by semi-circular clips fixed to the lever, lock, or cam.

When great compactness is required we arrange the cams and locks on the same axis, but instead of placing the axis in the former manner we place it in front of the levers. The compactness of this arrangement permits of the whole of the locking apparatus being enclosed in a case, which can be fixed on the ground or on platforms, rendering the expense of the ordinary foundations and framing unnecessary. The whole apparatus is above ground, and the working parts being enclosed in the case described, they are protected from injury by the weather or otherwise and easily got at for repair or adjustment.

In order to effect the locking and unlocking of the levers in one frame situated at a distance from another frame, or in order to control the levers working siding points situated at a distance from the signal cabin or platform (as the case may be), we adopt the following arrangement:—We make the lever-quadrant double or in two parts, one fixed and the other movable. The movable one turns upon a fulcrum at one end. When the movable part is in its lowest position and level with the fixed part, the two parts then act as one quadrant. When, however, the movable part is raised, a stud fixed in the hand lever or on one side of the movable end of the catch or pawl is retained in a notch in the movable quadrant or part, and the said hand-lever is thereby secured or locked. The raising of the movable part of the quadrant is effected by a rod or wire connection from the signal cabin or platform or other desirable place. By reversing the motion of the said rod or wire the movable part of the quadrant is brought down level with the fixed part, and the hand or point lever is unlocked and may be used for working the points. When, however, the point lever has been moved over, it will be out of the power of the signalman primarily controlling such lever to make any movement whereby danger may be produced, as the man working or using the point lever may secure the movable part of the quadrant by means of a pin or bolt, which may be put in by hand or by an independent lever, which could be made to effect this as well as to indicate to the signalman in the cabin or at the station that the siding points were being used.

We will now proceed to describe, with reference to the accompanying drawings, the manner in which our invention may be carried into effect:—

Figures 1, 2, and 3 represent vertical sections of our improved machinery or apparatus for working and interlocking the points and signals on railways, in which the independent axis of the locks is situated in front of the levers to be interlocked. Figure 4 is a front elevation of the same, and figure 5 is a sectional plan of the same. The section figure 1 is taken on the line A B of figure 5, the section figure 2 is taken on the line C D of figure 5, and the section figure 3 is taken on the line E F of figure 5. The same letters of reference indicate the same parts in figures 1, 2, 3, 4, and 5.

a is the point lever and g and h are the signal levers, the said levers a g h turning on the axis a^6; b is the cam of the point lever for actuating the locks e f of the signal levers g h, e being the lock for the second lever g, and f the lock for the third lever h. By an examination of figures 2, 3, and 5, it will be seen that a shoulder on the lock e may be made to bear against the stud k on the lever g, and a shoulder on the lock f bears against a stud l on the lever h, to lock or fix the said levers. The cam b turns on the axis j behind the axis a^6 of the point and signal levers a g h, and the said cam b is connected to the rocking shaft d by a link, the motion of the said rocking shaft d being transmitted to the locks e f through the connecting rods e^4 f^4. The locks e f turn upon the shaft or axis i, fixed in front of the shaft a^6, upon which the levers a g h turn. The locks e f, which are not self-acting, are maintained in balance by means of the counterbalance weights e^3 f^3. The cam b is actuated by the point lever a through the stud c on the said lever working in the slot represented in the said cam b. When the point lever a is pulled over to the position indicated at a^2, figure 1, the locks e f take the respective positions indicated in dotted lines in figures 2 and 3. In figure 2 the signal lever g is represented with the lock e in such a position that the stud k on the said lever g is free to pass under the curved surface of the said lock e. When the lever g is pulled over to the position g^2 the stud k on the said lever will occupy the position k^2 and will prevent the lock e being moved downwards. When the point lever a is moved from the position a, figure 1, to the position a^2, figure 1, the lock e takes the position indicated in dotted lines at e^2, figure 2, its shoulder being brought down in front of the stud k and thereby locking the lever g.

In

In figure 3 the signal lever h is represented locked by the engagement of the shoulder of the lock f with the front of the stud l on the said lever h. When, however, the point lever a is pulled over to the position a^2, figure 1, the lock f takes the position indicated in dotted lines at f^2, figure 3, and the said stud l is released, and the lever h may be pulled over to the position indicated in dotted lines at h^2, that is to say, by the lowering of the lock f its curved surface is brought below the stud l, thereby permitting the said stud to work over the said curved surface of the lock and take the position l^2 when the lever h is pulled over. When the lever h is in the position h^2, its stud in the position l^2 will prevent the lock being raised.

We will now briefly recapitulate the actions of the parts of the locking apparatus. The parts being in the respective positions represented in figures 1, 2, 3, and 4, the point lever a is in its back position, with its stud c engaged with the cam b, the signal lever g is free to take a forward position (see figure 2), and the signal lever h is locked by the engagement of the lock f with the stud l of the said lever h (see figure 3). When the point lever a is moved over to the position a^2, figure 1, it acts through the stud c upon the cam b, which takes the position indicated in dotted lines, and the said cam gives motion through the rocking shaft d and rods e^1 f^1 to the locks e f, and the said locks are made to take the respective positions indicated in dotted lines at e^2 and f^2 (figures 2 and 3). By this change of position of the locks e f the first signal lever g is locked by the engagement of the shoulder of the lock e with the stud k, and the second signal lever h is released by the lowering of the shoulder of the lock f and its removal from the front of the stud l on the said lever h. By reversing the position of the lever a, that is, moving it from the position a^2 to the position a, the locks e f again take the positions represented in continuous lines in figures 2 and 3, and the lever g is again unlocked and the lever h locked. The joints by which the levers, cams, and locks are connected with their respective axes are constructed as follows:—In the knee of each lever a semi-circular depression at a^3 is made, which fits into a groove, a^4, in the axis a^6. By means of semi-circular clips a^5 fixed to the lever, the said lever is held in its place on the shaft a^6. The joints of the cam b, locks e f, and parts connected therewith, are constructed in a similar way. By this means the removal of the parts from and their replacement on their respectives axes are facilitated.

Figure 9 represents a tranverse section; figure 10, a side elevation; figure 11, a front elevation; figure 12, a sectional plan; and figure 13, a plan of our invention, arranged for fixing at sidings or station platforms, where great compactness is required, the locking gear being placed in front of the levers. This apparatus may be conveniently covered in or enclosed by a box, whereby the parts are protected from injury and the weather. In this arrangement the cams and locks are placed on the same axis, the said axis being placed in front of the levers:—a is the point lever, b is the cam, and c the cam stud for working the locks e g; i is the shaft on which the cams and locks work, the said shaft being placed in front of the levers; d is the rocking shaft, to which the cam b is connected by the connecting rods or links b^2, and the locks e g are worked from the said rocking shaft d through the connecting rods or links e^2 g^2 respectively; f h are the signal levers, locked by the locks e g respectively. As the action of the parts of this gear is substantially the same as that of the arrangement first described, we do not think a further description necessary.

Figures 6 and 7 represent a side and end elevation respectively of our improved locking lever quadrant, for working siding points not connected up to or worked from the signal cabin:—m is the lever, fitted with the ordinary spring catch and rod; n is the fixed part of the quadrant; and o is the movable or locking part of the quadrant, the said movable part working on the centre o^1. The said movable part o is connected to the lever p by the rod q, the said lever p being connected by wire to the lever in the signal cabin or platform. In figure 6 the movable part o of the quadrant is represented raised, so as to lock the lever m in the position shown, that is, the upper edge of the movable part o is situated above the upper edge of the fixed part n of the quadrant, the raised part of the quadrant o forming a stop to the lever m, and preventing it being moved over. When the lower wire r^2 is pulled in the direction indicated by the arrow, the movable part o of the quadrant will be brought down to the same level as the fixed part n, when the lever m may be used for working the points in the usual way. To keep the movable part o in position, after it has been lowered upon the fixed part n, a pin-bolt, s^1, may be passed across it, so as to prevent for the time being the signalman from raising the quadrant o while the lever is being used.

Figure 8 is an elevation of a similar movable locking quadrant, applied to lock or govern the levers in a locking apparatus frame, which may either be worked from a distance or by other levers in the same frame. The parts in figure 8 are marked with the same letters of reference as corresponding parts in figures 6 and 7.

Having now described the nature of our invention, and the manner in which the same is to be performed, we wish it to be understood that we do not limit ourselves to the precise details herein described and illustrated, as the same may be varied without departing from the nature of our invention; but we claim as our invention,—

Firstly—The improvements in machinery or apparatus for working and interlocking points and signals on railways, hereinbefore described, and illustrated in figures 1, 2, 3, 4, and 5 of the accompanying drawings, that is to say, placing the axis of the locks in front of the levers to be interlocked, the said locks and the cams by which they are actuated turning upon independent axes, the said locks and cams and the parts connected therewith being constructed, arranged, and worked substantially as described and illustrated.

Secondly—The improvements in machinery or apparatus for working and interlocking points and signals on railways, hereinbefore described, and illustrated in figures 9, 10, 11, 12, and 13 of the accompanying drawings; that is to say, arranging the cams and locks of the locking apparatus on the same axis, the said axis being placed in front of the levers, substantially as and for the purpose described and illustrated.

Thirdly—The method hereinbefore described, and illustrated in the accompanying drawings, of constructing the joints, by which the levers, cams, and locks of machinery or apparatus for working and interlocking points and signals on railways are connected with their respective axes.

Lastly—

Improvements in Machinery or Apparatus for working or interlocking Points, &c.

Lastly—The construction and arrangement of the parts of the lever quadrants employed in working points and signals on railways, hereinbefore described, and illustrated in figures 6, 7, and 8 of the accompanying drawings, that is to say, making the lever quadrant double or in two parts, one part being fixed and the other part movable, the raising of the movable part from the fixed part locking the lever, and the lowering of the movable part releasing the lever, the the parts being constructed, arranged, and worked substantially as described and illustrated.

In witness whereof, we, the said Walter Holland, Samuel Telford Dutton, and Thomas Clunes, have hereunto set our hands and seals, this twenty-seventh day of February, 1879.

WALTER HOLLAND.
SAMUEL TELFORD DUTTON.
THOMAS CLUNES.

This is the specification, marked A, referred to in the annexed Letters of Registration granted to Walter Holland, Samuel Telford Dutton, and Thomas Clunes, this second day of July, A.D. 1879.

ALFRED STEPHEN.

REPORT.

Sir, Sydney, 3 June, 1879.

In the matter of the application of Messrs. Holland, Dutton, and Clunes, for Letters of Registration for their invention of "Improvements in Machinery or Apparatus for working or interlocking Points and Signals on Railways," which has been referred to us, we have the honor to report that, having examined the specification and drawings accompanying the same, we see no objection to the issue of Letters of Registration as prayed for.

We have, &c.,
E. C. CRACKNELL.
JOHN WHITTON.

The Principal Under Secretary.

[Drawings—four sheets.]

FIG. 1

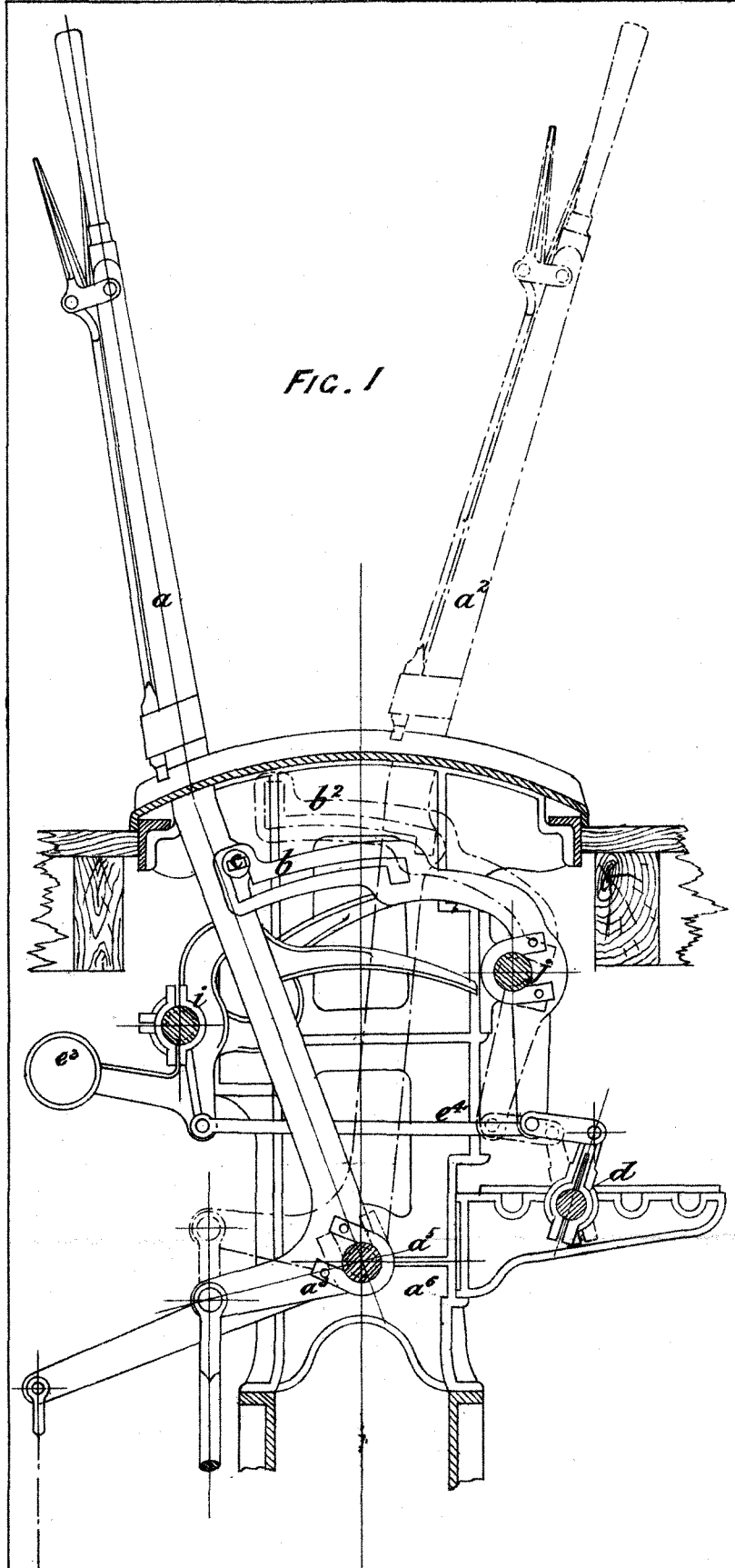

FIG. 2

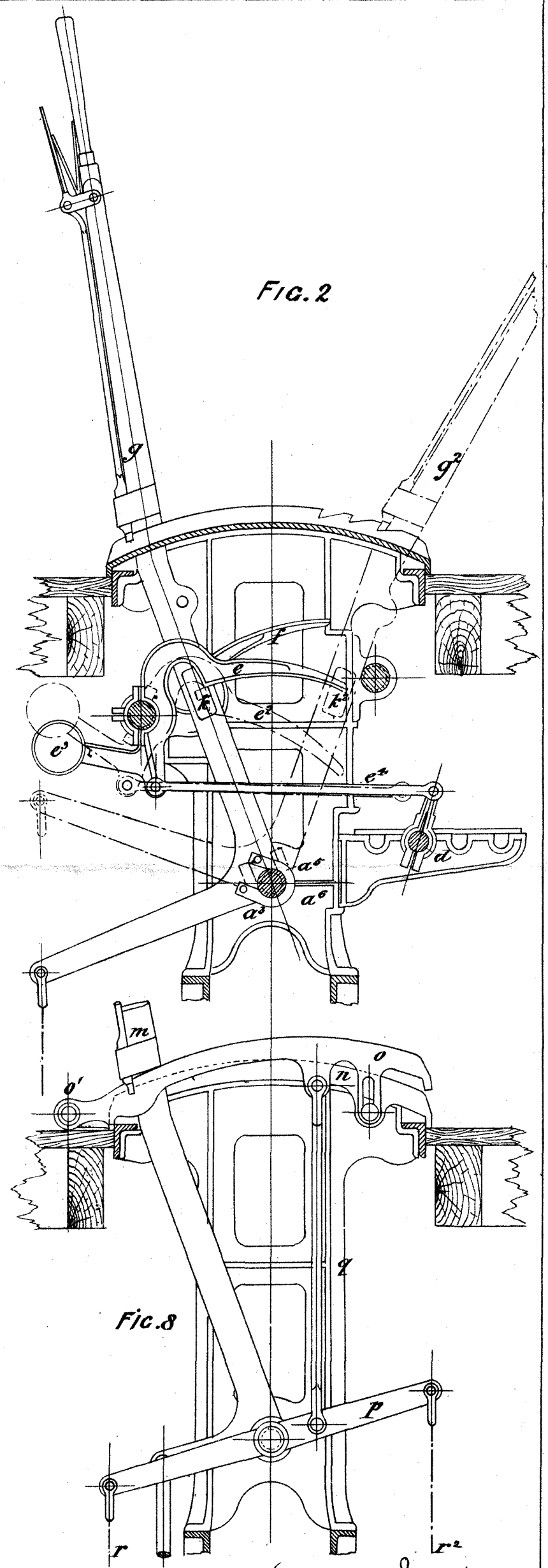

FIG. 5

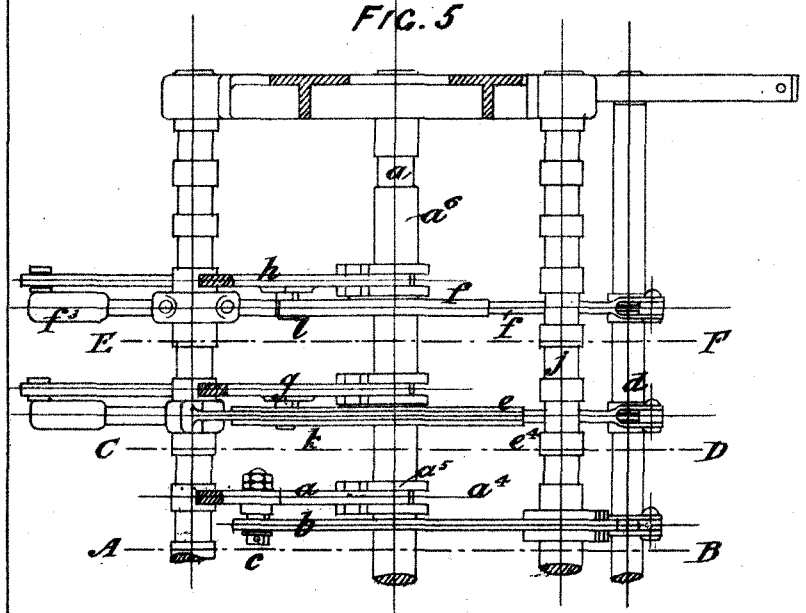

FIG. 8

This is the Sheet of Drawings marked "B" - referred to in the annexed Letters of Registration granted to Walter Holland Lammel Belford Sutton and Thomas Charles this Second day of July - A.D. 1879

(Sig: 198-)

"Alfred Stephen"

PHOTO-LITHOGRAPHED AT THE GOVT. PRINTING OFFICE, SYDNEY, NEW SOUTH WALES.

FIG. 3

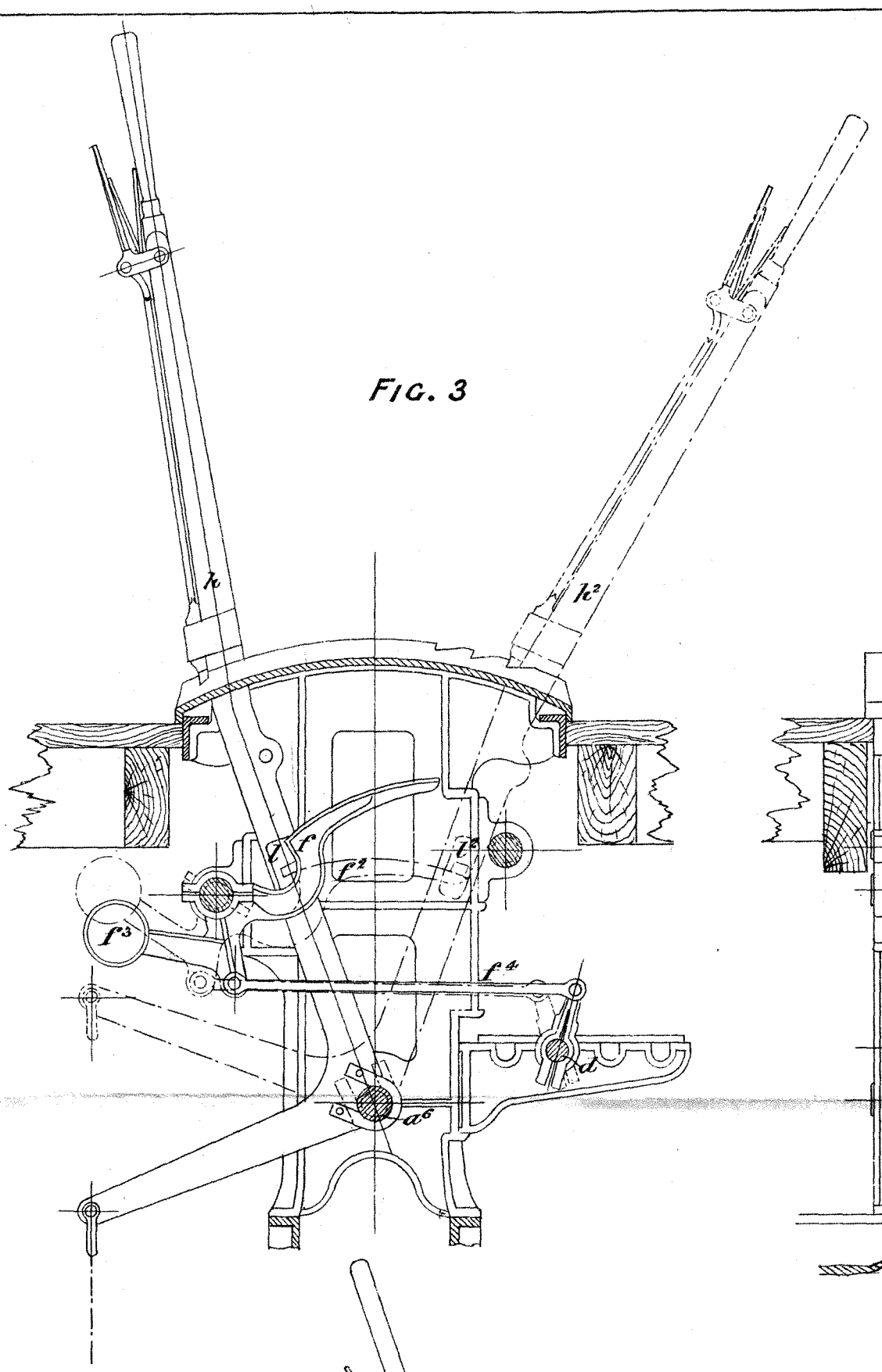

FIG. 4

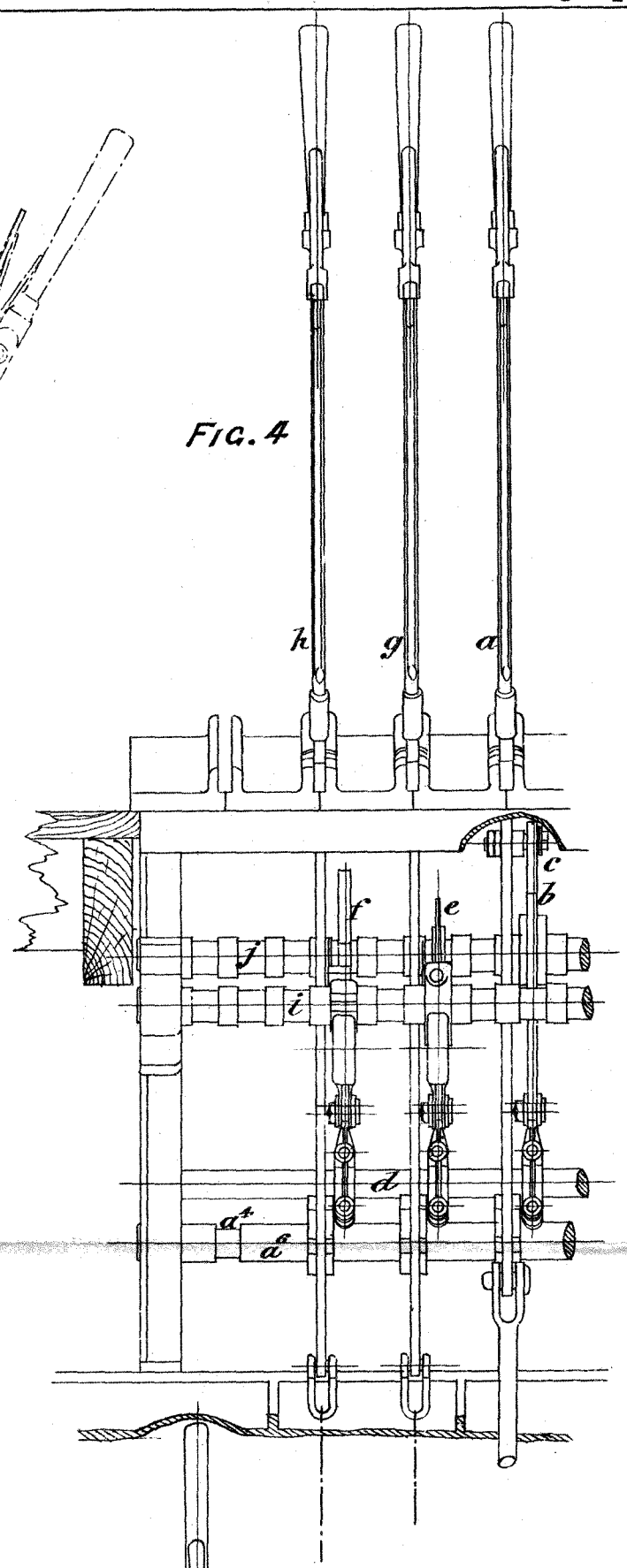

FIG. 6

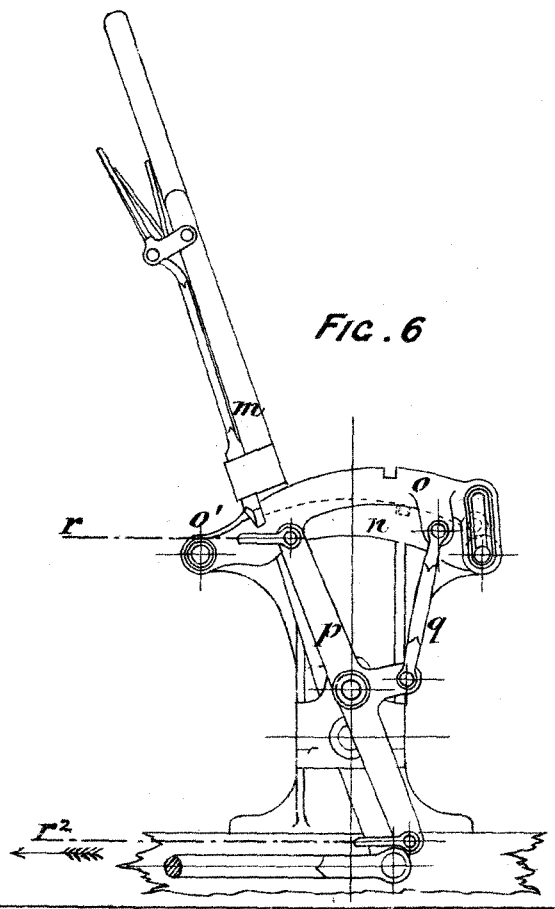

FIG. 7

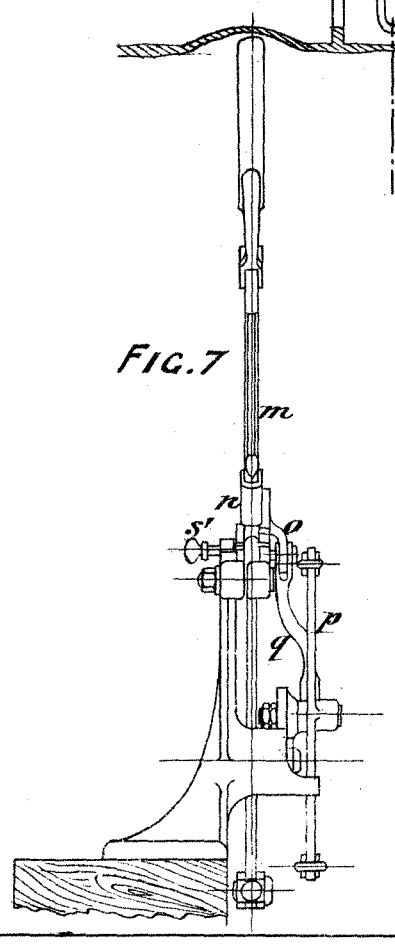

This is the Sheet of Drawings marked "C" referred to in the annexed Letters of Registration granted to Walter Holland Samuel Telford Dutton and Thomas Clunes this Second day of July A.D. 1879

(Sig: 198-)

"Alfred Stephen"

PHOTO-LITHOGRAPHED AT THE GOVT. PRINTING OFFICE,
SYDNEY, NEW SOUTH WALES.

FIG. 9

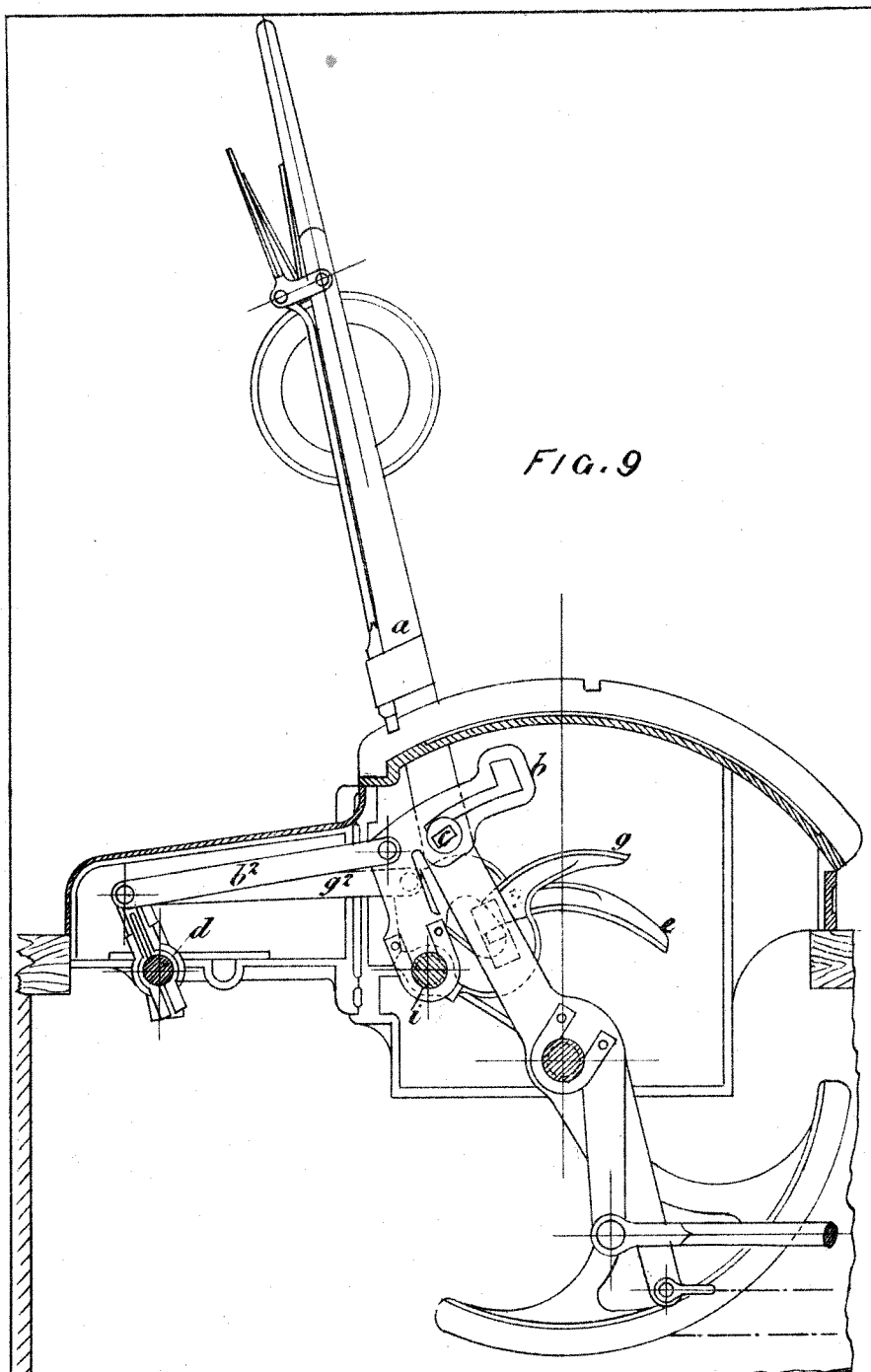

FIG. 10

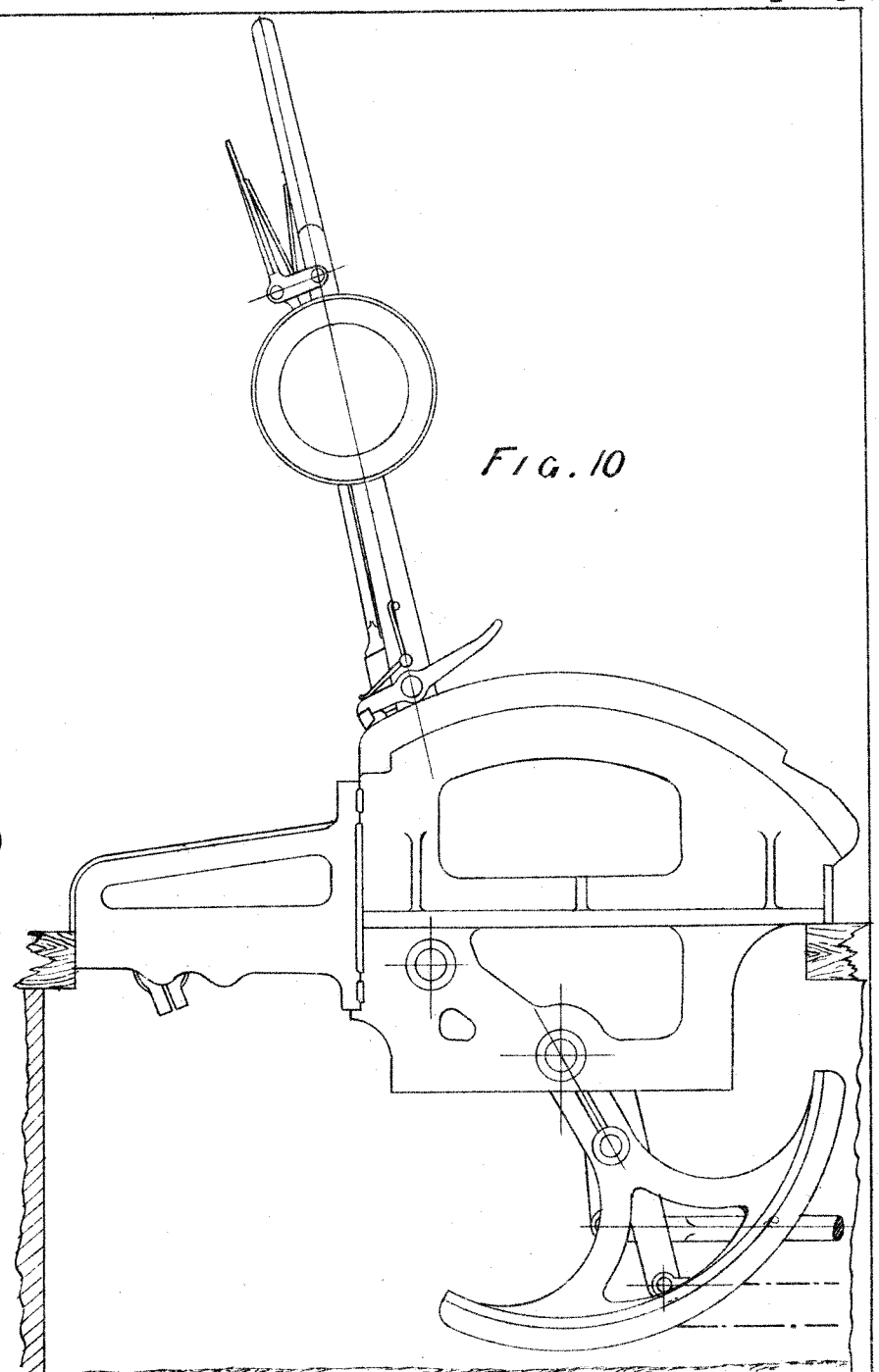

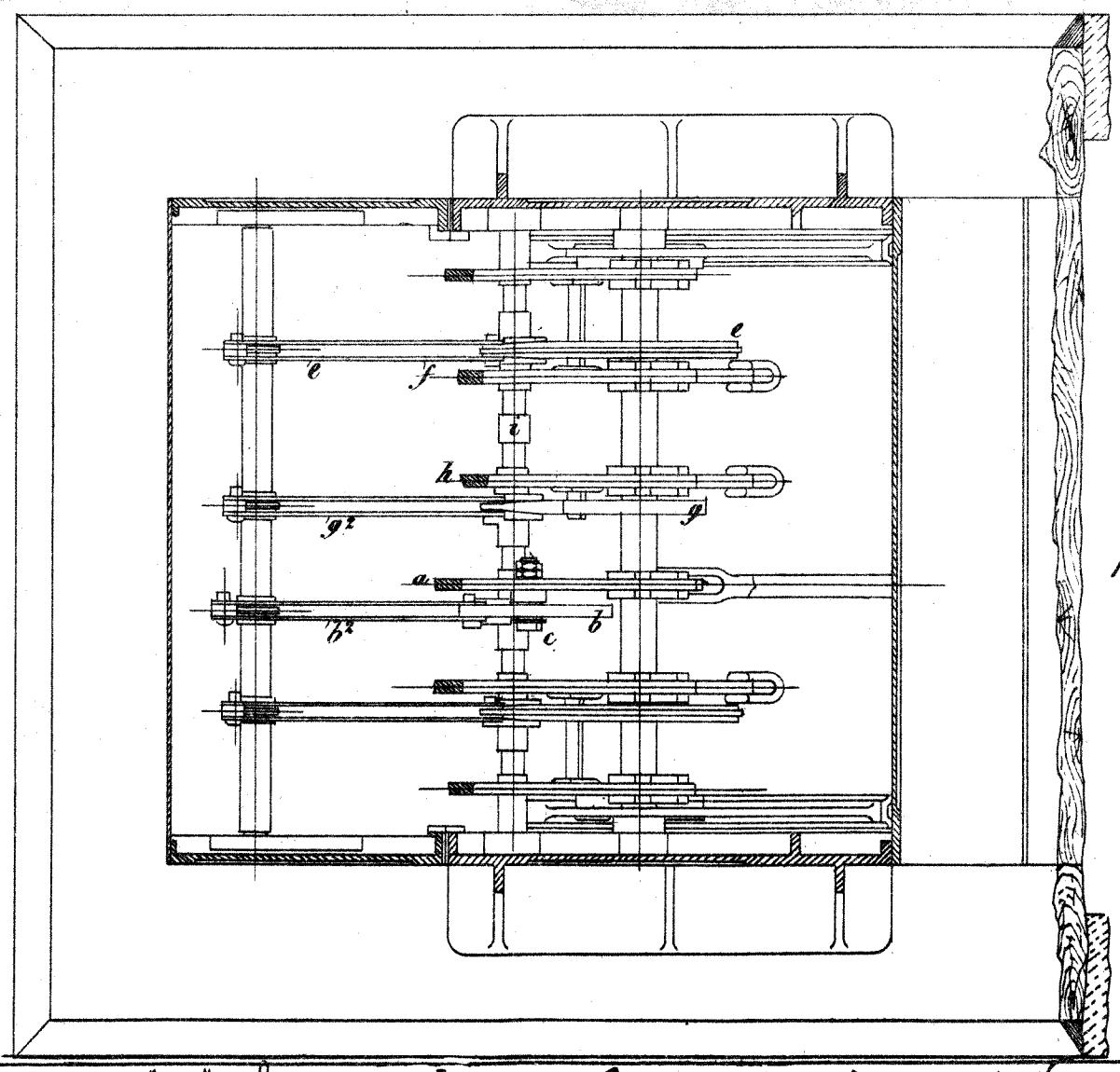

FIG. 12

This is the Sheet of Drawings marked "D". referred to in the annexed Letters of Registration granted to Walker Holland & Samuel Telford Sutton and Thomas Charles this Second day of July - A.D. 1879

(Sig: 198-)

"Alfred Stephen"

PHOTO-LITHOGRAPHED AT THE GOVT. PRINTING OFFICE,
SYDNEY, NEW SOUTH WALES.

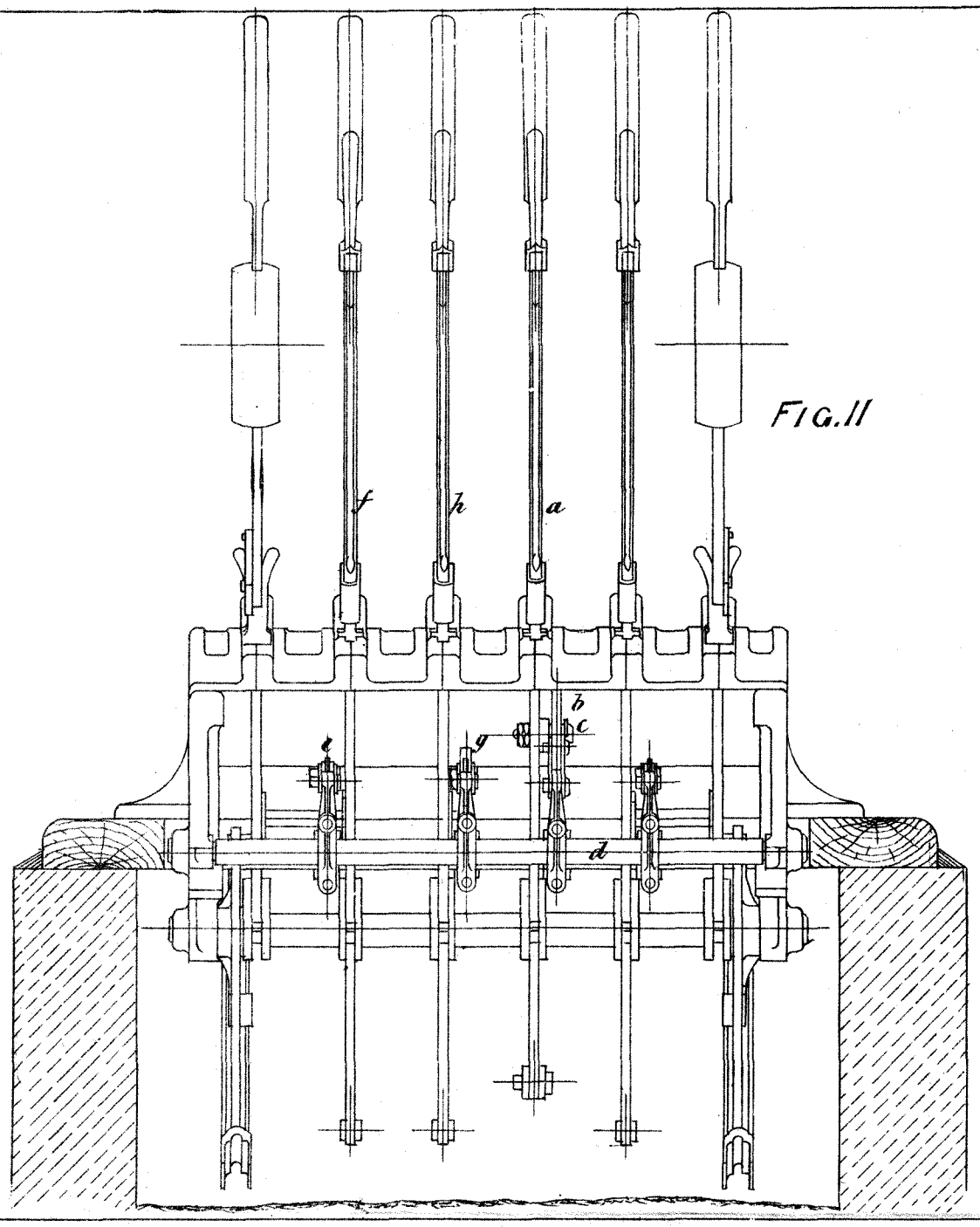

FIG. 11

FIG. 13

This is the Sheet of Drawings marked "E" - referred to in the annexed Letters of Registration granted to Walter Holland Sammel Telford Dutton and Thomas Clunes the Second - Day of July 1879

(Sig: 198-)

"Alfred Stephen"

PHOTO-LITHOGRAPHED AT THE GOVT. PRINTING OFFICE,
SYDNEY, NEW SOUTH WALES.

A.D. 1879, 8*th July*. No. 745.

IMPROVEMENTS IN HAMMOCK AND SHELTER TENTS.

LETTERS OF REGISTRATION to Charles Hugh Leycester, for Improvements in Hammock and Shelter Tents.

[Registered on the 9th day of July, 1879, in pursuance of the Act 16 Vic. No. 24.]

BY His Excellency Sir Alfred Stephen, Knight Commander of the Most Distinguished Order of Saint Michael and Saint George, and a Companion of the Most Honorable Order of the Bath, Lieutenant-Governor of New South Wales.

TO ALL TO WHOM THESE PRESENTS SHALL COME, greeting:

WHEREAS Charles Hugh Leycester, of Gwynfe, Llangadock, South Wales, Great Britain, gentleman, hath by his Petition humbly represented to me that he is the author or designer of a certain invention or improvement in manufactures, that is to say, of an invention entitled "Improvements in Hammock and Shelter Tents," which is more particularly described in the specification and the sheet of drawings which are hereunto annexed; and that he, the said Petitioner, hath deposited with the Honorable the Treasurer of the said Colony of New South Wales the sum of Twenty Pounds sterling, for defraying the expense of granting these Letters of Registration, as required by the Act of Council, sixteenth Victoria, number twenty-four; and hath humbly prayed that I would be pleased to grant Letters of Registration, whereby the exclusive enjoyment and advantage of the said invention or improvement might be secured to him for a period of fourteen years: And I, being willing to give encouragement to all inventions and improvements in the arts or manufactures which may be for the public good, and having received a report favourable to the prayer of the said Petition, from competent persons appointed by me to examine and consider the matters stated therein and to report thereon for my information, am pleased, with the advice of the Executive Council, and in exercise of the power and authority given to me by the said Act of Council, to grant, and do by these Letters of Registration grant unto the said Charles Hugh Leycester, his executors, administrators, and assigns, the exclusive enjoyment and advantage of the said invention or improvement, for and during the term of fourteen years from the date hereof; to have, hold, and exercise unto the said Charles Hugh Leycester, his executors, administrators, and assigns, the exclusive enjoyment and advantage thereof, for and during and unto the full end and term of fourteen years from the date of these presents next and immediately ensuing, and fully to be complete and ended: Provided always, that if the said Charles Hugh Leycester shall not, within three days after the granting of these Letters of Registration, register the same in the proper office in the Supreme Court, at Sydney, in the said Colony of New South Wales, then these Letters of Registration, and all advantages whatsoever hereby granted, shall cease and become void.

In witness whereof, I have hereunto set my sign manual, and have caused the present Letters of Registration to be sealed with the seal of the said Colony of New South Wales, at Government House, Sydney, in New South Wales, this eighth day of July, in the year of our Lord one thousand eight hundred and seventy-nine.

[L.S.]

ALFRED STEPHEN,
Lieutenant-Governor,
Administering the Government of the said Colony.

SPECIFICATION

Improvements in Hammock and Shelter Tents.

SPECIFICATION of CHARLES HUGH LEYCESTER, of Gwynfe, Llangadock, South Wales, Great Britain, gentleman, for an invention entitled "Improvements in Hammock and Shelter Tents."

ACCORDING to my present invention I construct a portable tent, more particularly applicable for slinging a hammock, as follows:—A pole, by preference made in two parts, joined together for the sake of portability, has at each end a metal ferrule, terminating in a pin of a round, square, or polygonal section. Upon these pins are fitted correspondingly formed metal eyes on the ends of supports, of which two are fitted on to each end of the said pole, in such a manner that their lower ends are some distance apart, thus constituting trestles, the lower ends of which have pointed ferrules, that are forced somewhat into the ground. The two supports to each end are by preference mounted with their eyes on a tubular socket which is fitted on to the pole, so that each support can be turned on its socket into any angular position to the other one, or they may be both folded up close together. The pole is thus held firmly at some distance from the ground, and to it is slung a hammock, as follows:—Over the ends of the before-mentioned pins are fitted metal washers, which confine the eyes of the supports, and which have loops formed on them, through which is passed a short length of rope formed into a loop. The one end of this loop is secured to the hammock slings, while the other, after being drawn tight through the loops of the washer, is secured to a hook fixed on the pole at a short distance from the end. The rope loop thus secures the hammock, and at the same time keeps the washer in its place on the end of the pin.

Instead of securing the trestles to the pole in the manner described, the supports may be formed with claws at the upper end so as to grip the end of the pole between them, such grip being produced by tying the lower ends of the supports together. I prefer the first described arrangement however.

The joint of the pole is formed, by preference, by fixing a metal socket on the end of the one length, into which fits a metal ferrule on the other length; a stud being formed on the latter, which fits into a notch in the socket, so as to prevent the ferrule from turning therein.

A covering of canvas or other suitable material is then stretched over the two trestles and connecting pole, the covering being formed so as to pass round the end of the trestles at which the head of the hammock is situated, where it is secured by buttoning, or by hooks; and it is also secured to studs or hooks on the trestles, so as to keep it in a stretched condition.

When not required for use, the supports of the trestles are taken off the ends of the poles and placed side by side, the connecting pole is separated into its two lengths and placed beside the supports, and the hammock and canvas covering are rolled round the poles and secured by straps, the whole forming a compact and portable parcel.

Although the above described construction of tent is especially intended for slinging a hammock, yet it may also be used as a shelter tent without the hammock.

DESCRIPTION OF THE DRAWINGS.

Fig. 1 is a perspective view, showing the framing of a portable tent according to my invention with the hammock slung thereon.

Fig. 2 shows the framing with its cover on.

Fig. 3 is an end view of the framing, showing one of the end trestles.

Fig. 7 shows the parts all packed together for transport; the other figures show details of construction to which I will presently refer.

A is the pole of the framing, made in two parts, jointed together in the middle, as shown to an enlarged scale at fig. 5, a ferrule F^1 on the one part being inserted into a socket F on the other part, and a stud F^2 entering a notch when necessary to prevent the two parts from turning round in relation to each other. The ends of the pole A are made with projecting pins, A^1, which may be square, as shown in fig. 8 or polygonal, or may be round as shown in figs. 9 and 10. On each of the pins A^1 are placed the two inclined legs B, forming the trestle. These legs may have heads with square eyes, B^1, as shown in fig. 6*a*, so that when both are put on the pin A^1 they form with one another a definite angle, as shown in fig. 6; or the two legs may be jointed together by a pin, B^3, as shown in fig. 9, their heads B^1 forming nipper jaws embracing the end of the pole A. By preference however the legs are jointed together on a tubular socket, as shown in fig. 10, in which case the pin A^1 may be round. The legs B are held on the pins A^1 in the manner shown in fig. 4; a winged washer, C, being placed on the pin beyond them, and secured by the loop of a cord passed through eyes in the wings of C, the said loop being hooked to the pole at A^2 and to the slings of the hammock D. The cover G, preferably of waterproof fabric, is secured by buttons or lacing at the angles, and kept stretched by hooks or buttons, B^4, on the trestles.

Fig. 11 shows a perspective view of the hammock tent, with an arrangement of the covering different from that above described; in this case the covering is formed as a flat awning, G, attached at the ends to metal rods, H, carried by small standards, I, fixed to the pole A. The standard has a hook at its upper end into which the rod H is hooked. The standards I, as also the ends of the rods H, are steadied by stays, K.

Fig. 12 shows an enlarged detail of the connections, showing also the mode of slinging the hammock more clearly. The pole A and trestles B are by preference made of strong bamboo for the sake of lightness.

Having thus described the nature of the said invention, and in what manner the same is to be performed, I claim—

First—The construction of framing for portable hammock or shelter tent, consisting of a horizontal pole, to the ends of which are secured trestle legs, substantially as herein described.

Second—Mounting the trestle legs upon a tubular socket or eye, so that they can be turned on the socket to any angle, or folded close together, substantially as herein described.

Third—The combination of the hammock with the framing above referred to.

Fourth—The combination of the covering fabric with the framing above referred to, as described with reference to fig. 2.

Fifth—The combination with the framing above referred to of an awning arranged as described with reference to figs. 11 and 12.

In

In witness whereof, I, the said Charles Hugh Leycester, have hereunto set my hand and seal, this twenty-fifth day of March, in the year of our Lord one thousand eight hundred and seventy-nine.

Witness—
JOSEPH BURGESS.

CHAS. H. LEYCESTER.

This is the specification referred to in the annexed Letters of Registration granted to Charles Hugh Leycester, this eighth day of July, A.D. 1879.

ALFRED STEPHEN.

REPORT.

Sir,

Sydney, 12 June, 1879.

We do ourselves the honor to report, in reply to your blank cover communication of the 9th instant, No. 4,284, that we see no objection to the issue of Letters of Registration securing to Mr. Charles Hugh Leycester his invention entitled "Improvements in Hammock and Shelter Tents," in terms of Mr. Leycester's Petition, drawings, specification, and claim.

We have, &c.,
JOHN S. RICHARDSON, Lt.-Col.
GOTHER K. MANN.

The Principal Under Secretary.

[Drawings—one sheet.]

A.D. 1879, 9*th July*. No. 746.

MACKENZIE'S VACUUM CURING BOX.

LETTERS OF REGISTRATION to Alexander Richard Mackenzie, for an invention called "Mackenzie's Vacuum Curing Box."

[Registered on the 10th day of July, 1879, in pursuance of the Act 16 Vic. No. 24.]

BY His Excellency Sir Alfred Stephen, Knight Commander of the Most Distinguished Order of Saint Michael and Saint George, and a Companion of the Most Honorable Order of the Bath, Lieutenant-Governor of New South Wales.

TO ALL TO WHOM THESE PRESENTS SHALL COME, greeting:

WHEREAS Alexander Richard Mackenzie, of Mackay, in the Colony of Queensland, hath by his Petition humbly represented to me that he is the author or designer of a certain invention or improvement in manufactures, that is to say, of an invention called "Mackenzie's Vacuum Curing Box," which is more particularly described in the specification, marked A, and the two sheets of drawings, marked B and C, respectively, which are hereunto annexed; and that he, the said Petitioner, hath deposited with the Honorable the Treasurer of the said Colony of New South Wales the sum of Twenty Pounds sterling, for defraying the expense of granting these Letters of Registration, as required by the Act of Council, sixteenth Victoria, number twenty-four; and hath humbly prayed that I would be pleased to grant Letters of Registration, whereby the exclusive enjoyment and advantage of the said invention or improvement might be secured to him for a period of fourteen years; and I, being willing to give encouragement to all inventions and improvements in the arts or manufactures which may be for the public good, and having received a report favourable to the prayer of the said Petition, from competent persons appointed by me to examine and consider the matters stated therein and to report thereon for my information, am pleased, with the advice of the Executive Council, and in exercise of the power and authority given to me by the said Act of Council, to grant, and do by these Letters of Registration grant unto the said Alexander Richard Mackenzie, his executors, administrators, and assigns, the exclusive enjoyment and advantage of the said invention or improvement, for and during the term of fourteen years from the date hereof; to have, hold, and exercise unto the said Alexander Richard Mackenzie, his executors, administrators, and assigns, the exclusive enjoyment and advantage thereof, for and during and unto the full end and term of fourteen years from the date of these presents next and immediately ensuing, and fully to be complete and ended: Provided always, that if the said Alexander Richard Mackenzie shall not, within three days after the granting of these Letters of Registration, register the same in the proper office in the Supreme Court, at Sydney, in the said Colony of New South Wales, then these Letters of Registration, and all advantages whatsoever hereby granted, shall cease and become void.

In witness whereof, I have hereunto set my sign manual, and have caused the present Letters of Registration to be sealed with the seal of the said Colony of New South Wales, at Government House, Sydney, in New South Wales, this ninth day of July, in the year of our Lord one thousand eight hundred and seventy-nine.

[L.S.]

ALFRED STEPHEN,
Lieutenant-Governor,
Administering the Government of the said Colony.

SPECIFICATION

A.D. 1879. No. 746.

Mackenzie's Vacuum Curing Box.

SPECIFICATION of an invention by ALEXANDER RICHARD MACKENZIE called "Mackenzie's Vacuum Curing Box."

WHAT my invention consists of is the use of a steam ejector, for the purpose of securing a partial vacuum in any pan, box, or column, or in a receptacle in connection therewith, used for the purpose of draining, drying, or curing sugar, and for the more effectually separating and classifying the molasses, treacle, or syrup separated from said sugar in process of draining, drying, or curing; and in the use of knives or arms connected to and radiating from a central shaft revolving in the interior of the box or column containing the granulated sugar while being drained, dried, or cured, for the purpose of keeping the said sugar in motion or circulation in the box or column; and in the use of a glass tube placed in the connection between the said box or column and the receptacle in connection therewith, for the purpose of facilitating the classification of the molasses or syrup drained from the granulated sugar under treatment in the box or column.

To enable this invention to be readily understood, drawings are annexed of which the following is a description, and which I purpose calling a "Vacuum Curing Box":—The figure marked A is the box or column shown in section, to contain the granulated sugar to be drained, dried, or cured, fitted with a dished bottom, marked B, and an inner bottom, marked C. This inner bottom is formed with narrow perforations or slits in it, and covered with fine wire, gauze, or similar material. The figure marked D is the centre shaft, preferably of cast iron, with core hole down centre, and with sockets as shown cast with it, to which the knives or arms can be securely fixed. The knives or arms marked E′ E″ E‴ can be of any form suitable to obtaining a circulation of the sugar contained in the box, but I prefer the following, as shown in the sectional elevation and three sectional plans annexed. The bottom arms marked E″ are placed opposite one another on the shaft, and each arm has two parts, namely the outer and the inner part; the outer part is flat and curved, and when the arm revolves presses its flat concave side against the sugar, the outer extremity leading much in advance; this action tends to draw the sugar acted on towards the centre, to be acted on by the inner part of the arm; this part is made knife-edged, presenting its edge to the sugar edge downwards, at an angle of about 15°, for the purpose of lifting or elevating the sugar in the centre of the box. All the knives on the shaft excepting the bottom pair and top pair are single, that is, not placed opposite one another, and are arranged in the form of a spiral, are all similar to inner part of bottom knives, and made long enough to extend only about two-thirds of the space between the shaft and sides of the box, and like the bottom knives all tend to raise the sugar in centre of box. A plan of one of the intermediate knives is shown at E in the sectional plan of line C′ D′, sheet No. 2. The top pair of arms are made flat and curved, and present their flat convex sides to the sugar when the shaft revolves, thus tending to push the sugar away from the centre to the sides of the box, where it descends by gravity, the bottom stratum being constantly cut away or excavated by the action of the bottom pair of knives. Top knives are shown in plan at E, sheet No. 2.

The centre shaft works in a footstep or bearing in the centre of inner bottom C, and through a suitable gland or bearing in cover of box, and is driven by the toothed wheel marked G, and worm wheel marked H, connected by belt and pulley, or other approved gearing, to engine.

A lid or door is shown at J where the box can be charged with the granulated sugar to be treated; the lid fits air tight in a groove shown in the ring round the opening. A door to discharge the sugar is shown at K; this is securely held in position when shut by a cross-bar and pinching screw on the back of the door as shown.

The inner bottom C is supported and thus strengthened by a hollow cylindrical distance piece being fitted between it and the true or dished bottom B; this distance piece has openings left in its bottom edge to allow the molasses to pass it, as hereinafter described.

Below the box A is placed the receiver marked L, preferably corrugated circumferentially in the sides, and with dished top and bottom ends; the receiver L is connected with box A by a glass tube fixed in a strong frame, as shown at M, and provided with a stop-cock, as shown at N; the receiver L is divided vertically by a partition plate, or preferably has a smaller receiver placed and secured inside it, as shown at O.

Below the glass tube is placed a tip scoop P, which can be oscillated freely on its centre by raising or depressing the rod and handle provided, thus directing any molasses descending through the glass tube, either into inner or outer receiver, as may be wished.

To the receiver L is connected a steam ejector, shown in section at Q, for the purpose of securing a partial vacuum in the receiver L.

The ejector is supplied by the pipe R with high pressure steam, preferably superheated; this steam passing into the annular space round the central nozzle, rushes with force past mouth of said nozzle into the exhaust pipe U; this causes an induced current to flow along the central nozzle, which is connected by pipe W with receiver L, thus drawing away air contained in said receiver. A back pressure valve is shown in back of ejector, to prevent the readmission of air to the receiver when the ejector is stopped from working.

On top of centre shaft D is fixed a cup communicating with core hole down centre of shaft, but which communication can be closed by a plug when desired. Behind each of the knives, or as many as may be desired, may be secured a small metal tube (not shown in drawing), closed at its outer end, but with numerous lateral perforations throughout its length, the inner end being inserted and secured in a hole drilled into core hole in centre shaft.

To facilitate the separation and extraction of the molasses from the granulated sugar in the box A, it is advantageous to maintain the sugar at a temperature of about 160 degrees Fahrenheit, therefore round the body of column or box A is placed a warm water jacket, shown in sectional elevation and sectional plans as the annular space marked S. This space is to be filled with water, to be maintained at the desired temperature by the heating pipe marked Z, shown in section plan of line C′ D′; this pipe is semicircular, and attached at each end to the water jacket, at opposite sides of the box A. The connection at one end is made by means of a tee piece in which is inserted a thermometer, as shown; by means of a tee piece and nut in the body of pipe is secured a steam nozzle blowing into the interior of pipe; this steam driving the water through the pipe condenses and heats the water. The attendant, by increasing or diminishing the supply of steam, can regulate the temperature of the water as shown by the thermometer in the inlet orifice of pipe.

The

Mackenzie's Vacuum Curing Box.

The method of working the vacuum curing box is as follows:—It is first charged with granulated sugar from the vacuum pan through the door J and the door left open, a partial vacuum is then formed in receiver L by means of the ejector Q, the centre shaft with its arms is caused to revolve and the stop-cock N is opened. The partial vacuum in the receiver L causes the molasses to be rapidly drawn from the granulated sugar through the glass tube in the frame M into the receiver L; this is continued until the sugar is sufficiently drained or cured. The molasses which comes down first has less value than that which comes down later, and the object of passing it through a glass is to enable the attendant to judge when to alter the flow by means of the tip scoop into the inner tank or receiver.

If it is desired to wash the sugar, the door at J is closed and water or syrup placed in cup on top of shaft D. When the plug is removed the liquid descends down the core hole and into the small tubes behind the knives and by the lateral holes into the sugar.

What I claim for my invention is—

Firstly—The use of a steam ejector for the purpose of securing a partial vacuum in any box or column used for the purpose of draining, drying, or curing sugar; the ejector may be of any approved form, as for example with single annular steam jet, as shown in drawing, or with centre and outer annular steam jets, an intermediate annular jet being provided for emission of air from receiver or column.

Secondly—The use of a centre shaft fitted with knives or arms revolving in the sugar to be drained, dried, or cured, for the purpose of giving it motion or circulation while under treatment.

Thirdly—The use of a glass tube between the box or column containing the granulated sugar to be drained, dried, or cured, and the receiver into which the molasses is drawn by the partial vacuum formed in it by the steam ejector.

ALEXANDER RICHARD MACKENZIE.

This is the specification, marked A, referred to in the annexed Letters of Registration granted to Alexander Richard Mackenzie, this ninth day of July, A.D. 1879.

ALFRED STEPHEN.

REPORT.

Sir,

Sydney, 10 June, 1879.

The application of Mr. Geo. Smith, on behalf of Mr. Alex. R. Mackenzie, for Letters of Registration for an invention styled "Mackenzie's Vacuum Curing Box," having been referred to us, we have examined the specification and drawings accompanying the same, and have now the honor to report that we see no objection to the issue of Letters of Registration as prayed for.

We have, &c.,

J. SMITH.

The Principal Under Secretary.

CHAS. WATT.

[Drawings—two sheets.]

Fig. 1.

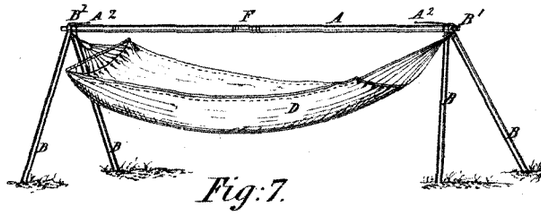

Fig: 2.

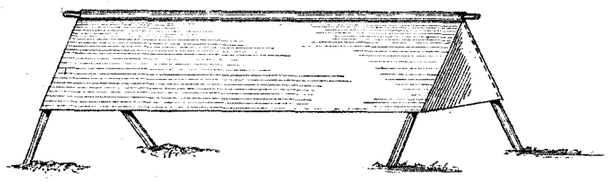

Fig:3.

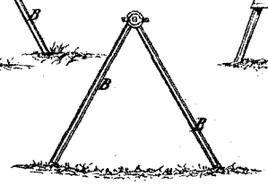

Fig:7.

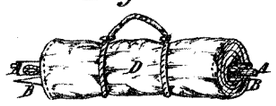

Fig:10.

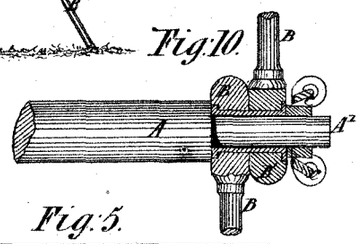

Fig:6.

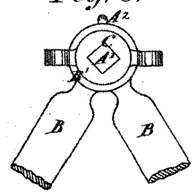

Fig:6.a



Fig 4.

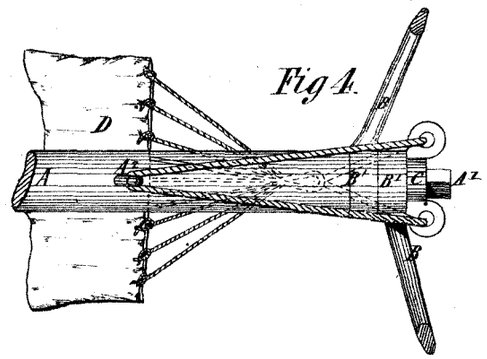

Fig:5.



Fig:8.

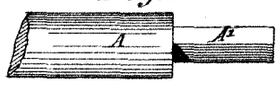

Fig:9.

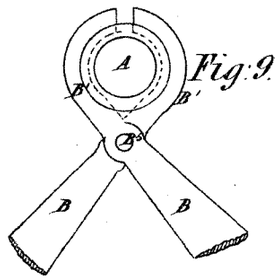

Fig:11.

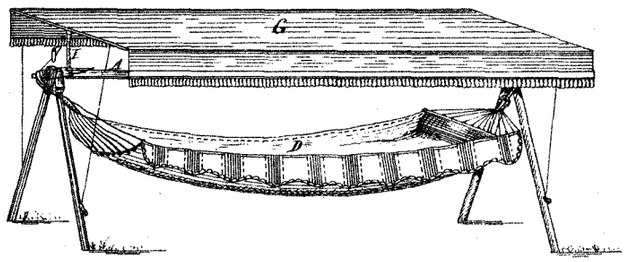

Fig:12.

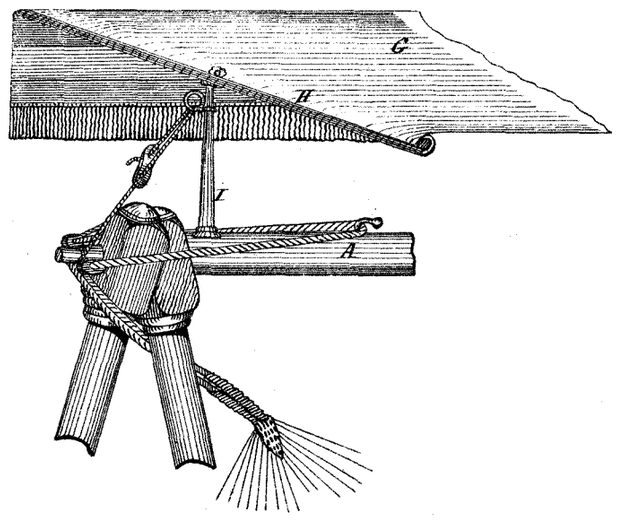

This is the Sheet of Drawings referred to in the annexed Letters of Registration granted to Charles Hugh Leycester this eighth day of July 1879.

Alfred Stephen.

PHOTO-LITHOGRAPHED AT THE GOVT. PRINTING OFFICE, SYDNEY, NEW SOUTH WALES.

Mackenzie's
VACUUM CURING BOX

Sheet N°1.

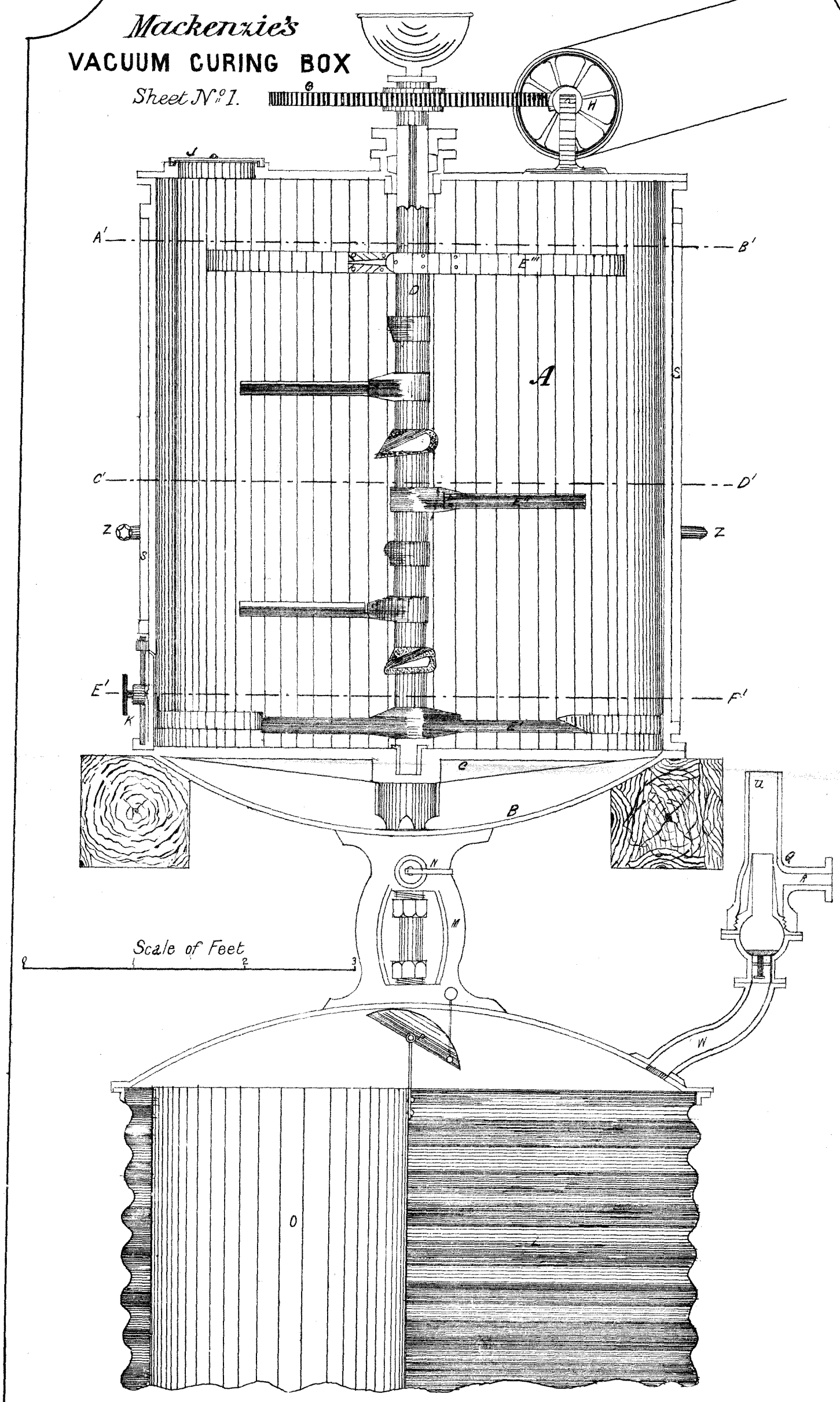

This is the Sheet of Drawings marked B referred in the annexed Letters of Registration granted to Alexander Richard Mackenzie this ninth day of July A.D. 1879.

Alfred Stephen.

(Sig. 198)

Mackenzie's

VACUUM CURING BOX

Sheet No 2

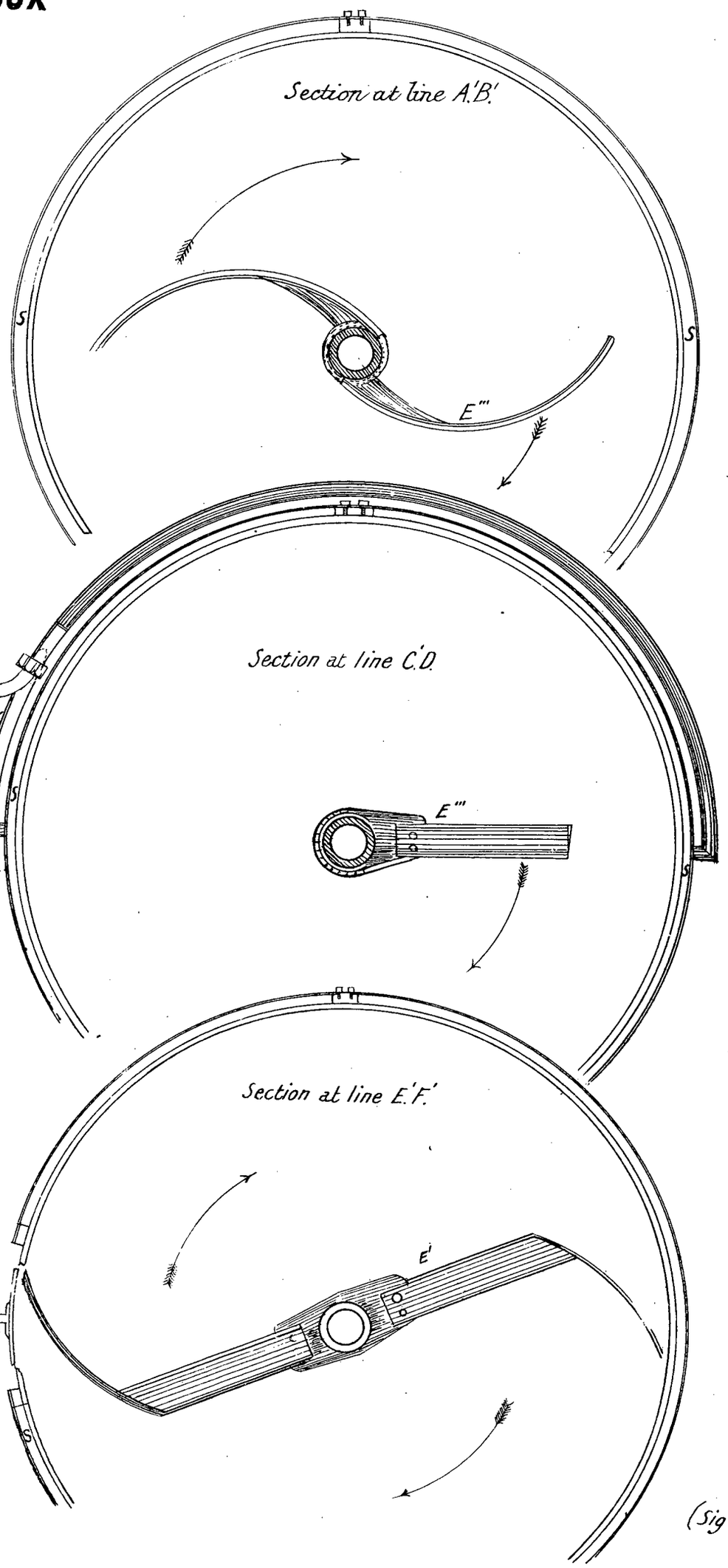

This is the Sheet of Drawings marked C referred to in the annexed Letters of Registration granted to Alexander Richard Mackenzie this ninth day of July A.D. 1879

Alfred Stephens

(Sig 198–)

A.D. 1879, 17*th July*. No. 747.

IMPROVEMENTS IN THE PROCESS OF MANUFACTURING NITRO-GLYCERINE, &c.

LETTERS OF REGISTRATION to Frederick Mann, for Improvements in the process of manufacturing Nitro-glycerine, an improved Apparatus employed therein, and an Improvement in the manufacture of Nitro-glycerine compounds.

[Registered on the 18th day of July, 1879, in pursuance of the Act 16 Vic. No. 24.]

BY HIS EXCELLENCY SIR ALFRED STEPHEN, Knight Commander of the Most Distinguished Order of Saint Michael and Saint George, and a Companion of the Most Honorable Order of the Bath, Lieutenant-Governor of New South Wales.

TO ALL TO WHOM THESE PRESENTS SHALL COME, greeting:

WHEREAS FREDERICK MANN, of Koroit Creek, Braybrook, in the Colony of Victoria, manufacturing chemist, hath by his Petition humbly represented to me that he is the author or designer of a certain invention or improvement in manufactures, that is to say, of an invention intituled "Improvements in the process of manufacturing Nitro-glycerine, an improved Apparatus employed therein, and an Improvement in the manufacture of Nitro-glycerine compounds," which is more particularly described in the specification and the sheet of drawings which are hereunto annexed; and that he, the said Petitioner, hath deposited with the Honorable the Treasurer of the said Colony of New South Wales the sum of Twenty Pounds sterling, for defraying the expense of granting these Letters of Registration, as required by the Act of Council, sixteenth Victoria, number twenty-four; and hath humbly prayed that I would be pleased to grant Letters of Registration, whereby the exclusive enjoyment and advantage of the said invention or improvement might be secured to him for a period of fourteen years: And I, being willing to give encouragement to all inventions and improvements in the arts or manufactures which may be for the public good, and having received a report favourable to the prayer of the said Petition, from competent persons appointed by me to examine and consider the matters stated therein and to report thereon for my information, am pleased, with the advice of the Executive Council, and in exercise of the power and authority given to me by the said Act of Council, to grant, and do by these Letters of Registration grant unto the said Frederick Mann, his executors, administrators, and assigns, the exclusive enjoyment and advantage of the said invention or improvement, for and during the term of fourteen years from the date hereof; to have, hold, and exercise unto the said Frederick Mann, his executors, administrators, and assigns, the exclusive enjoyment and advantage thereof, for and during and unto the full end and term of fourteen years from the date of these presents next and immediately ensuing, and fully to be complete and ended: Provided always, that if the said Frederick Mann shall not, within three days after the granting of these Letters of Registration, register the same in the proper office in the Supreme Court, at Sydney, in the said Colony of New South Wales, then these Letters of Registration, and all advantages whatsoever hereby granted, shall cease and become void.

In witness whereof, I have hereunto set my sign manual, and have caused the present Letters of Registration to be sealed with the seal of the said Colony of New South Wales, at Government House, Sydney, in New South Wales, this seventeenth day of July, in the year of our Lord one thousand eight hundred and seventy-nine.

[L.S.] ALFRED STEPHEN,
Lieutenant-Governor,
Administering the Government of the said Colony.

SPECIFICATION

A.D. 1879. No. 747.

Improvements in the process of manufacturing Nitro-glycerine, &c.

SPECIFICATION of FREDERICK MANN, of Koroit Creek, Braybrook, in the Colony of Victoria, manufacturing chemist, for an invention intituled "Improvements in the process of manufacturing Nitro-glycerine, an improved Apparatus employed therein, and an Improvement in the manufacture of Nitro-glycerine compounds."

THIS invention consists of two distinct improvements in the process of manufacturing nitro-glycerine, an improved apparatus employed therein, and an improvement in the manufacture of nitro-glycerine compounds.

The first of these improvements consists in mixing together the acids and glycerine used in the production of nitro-glycerine whilst in a state of spray or mist; and the second consists in subjecting the nitro-glycerine when formed to a certain novel manipulation for the removal of the gaseous nitrogen compounds existing therein and generally known as "fumes." This invention also consists in an improved apparatus for converting the acids and glycerine into spray or mist, and assisting in their combination; and in a novel material for the vehicle in nitro-glycerine compounds.

Referring to the drawings hereto attached, A, B and C represent bottles containing respectively sulphuric acid, nitric acid, and glycerine. The pipes from these bottles, marked respectively A^1, B^1, and C^1, are brought together and form a worm-shaped coil as they pass through the refrigerating tank D, which is filled with cold water. When they have reached the bottom of this tank their ends are pointed downwards as shown. Surrounded by these three pipes is another pipe, E, proceeding from a sulphuric acid chamber E^1, connected by pipe E^2 with an air compressor E^3. Said pipe E terminates a little (say from 1 to 2 inches) before the acid and glycerine pipes. F is an air-tight chamber, in which are perforated plates or sieves, F^1, and which lead down to a water tank, G. G^1 is an air-pipe terminating in a perforated annulus, G^2, for agitating the water in the tank.

The mode of operation is as follows:—The acids and glycerine are allowed to flow simultaneously through their respective worms in refrigerating tank D, and a powerful blast of air is supplied by air-compressor E^3, through sulphuric acid chamber E^1 (where it is dried) and through worm E in tank D (where it is refrigerated), discharging at a pressure of (say) 40 lbs. to the square inch. This immediately blows the acids and glycerine into spray or mist so as to facilitate their combination, and carries them at a considerable pressure through the sieves or perforated discs F^1 into the water tank G, where the mixture of acid and glycerine (nitro-glycerine) is washed in several changes of water agitated by jets of compressed air, as for instance through an annulus like G^2, and is then treated in the ordinary way by a 5 per cent. soda solution.

If preferred, the spray or mist, after leaving the chamber F, may be treated for the recovery of the sulphuric acids as described in the specification of an invention for which I obtained New South Wales Letters of Registration, dated the twenty-ninth day of November, one thousand eight hundred and seventy-seven, and the frozen nitro-glycerine washed in several changes of water in the same way as if it had not been frozen.

After these washings my second improvement comes into play. I first submit the washed nitro-glycerine to a solution of carbonate of ammonia of 10 per cent. and gradually heated to 100° Fahrenheit. It is very necessary that this heat be reached, as otherwise the action is not complete. As soon however as the above temperature is obtained, the solution of ammonia is changed to the colour of port wine. This treatment is continued for the space of half an hour or more, the length of treatment being determined by taking out a small portion of the nitro-glycerine in a test tube and thoroughly agitating it for a few minutes with a fresh clear clean and colourless boiling solution of the ammonia. If after this the solution remains perfectly clear without any discoloration, it is proof that the nitro-glycerine is sufficiently treated and pure.

Nitro-glycerine can be manufactured according to this invention with more safety and cheaper than hitherto.

Referring now to my improvement in the manufacture of nitro-glycerine compounds, it is now well-known that nitro-glycerine compounds are manufactured by saturating a certain material commonly known as infusorial earth with nitro-glycerine. The best quality of this earth will only hold about three times its weight of nitro-glycerine, and even then part of it will sometimes exude, especially if the cartridges have been frozen and thawed again. Now this part of my invention has been devised for the purpose of providing a substitute for the infusorial earth which will hold a much larger quantity of nitro-glycerine without exuding. This substitute I prepare in the following manner:—I take any kind of light wood, such as pine, deal, cedar, fir, alder, &c., and place it when quite dry in retorts similar to those used at gas-works, and there carbonise it at a red heat. This will take about an hour and upwards according to the kind and size of the pieces of wood used, the harder the wood and the closer its grain the longer it will take. Ordinary deal will carbonise in about one hour, and care must always be taken that the retort is red hot when the wood is put in it. When perfectly carbonised I withdraw the charge into a shallow iron receiver (say about 6 inches deep), and sufficiently large to allow the charge to form a layer about 3 inches thick on the bottom of such receiver. Here I allow it to lay, frequently stirring it about until it shows a slightly white surface. I then cover it down with a tight lid until it becomes quite cold, after which I reduce it to powder, when it is fit for use.

This substance differs materially from ordinary charcoal, and will absorb from four to seven times its weight of nitro-glycerine, which it will hold perfectly without allowing any to exude, the lighter the wood carbonised, the more nitro-glycerine will it hold, and further, if the carbonised wood be allowed to remain in the receiver after the slightly white surface has appeared it will decrease in quantity but will hold a larger percentage of nitro-glycerine.

My prepared powdered carbonised wood is to be used in the manufacture of nitro-glycerine compounds in precisely the same way as infusorial earth is now used, only that a smaller quantity is required by reason of the greater absorbent power of my material.

In the manufacture of cartridges my prepared powdered carbonised wood can be mixed or not with a nitrating substance, such as nitrate of potash, and with pulped gun-cotton, both in greater or less quantities, for the purpose of increasing the strength of the resultant compound, in the same way as these materials

materials are now used when the nitro-glycerine is mixed with infusorial earth. I do not however, confine myself to any subsequent use of the nitro-glycerine compound produced by the admixture of nitro-glycerine with my prepared powdered carbonised wood, but I claim as my invention—

First—Mixing together *in a state of spray or mist* the acids and glycerine from which nitro-glycerine is manufactured.

Second—The apparatus shown in my drawings for accomplishing this mixing, in a state of spray or mist, of the acids and glycerine which produce nitro-glycerine.

Third—The subjection of impure nitro-glycerine to the action of a solution of carbonate of ammonia, and to a certain heat, substantially as herein described and explained, for the purpose of removing those impurities known as "fumes."

Fourth—The manufacture of nitro-glycerine compounds by the admixture of nitro-glycerine with powdered carbonised light wood prepared in the manner herein set forth and described.

In witness whereof, I, the said Frederick Mann, have hereto set my hand and seal, this tenth day of June, one thousand eight hundred and seventy-nine.

FRED. MANN.

Witness—
EDW. WATERS,
Patent Agent, Melbourne.

This is the specification referred to in the annexed Letters of Registration granted to Frederick Mann, this seventeenth day of July, A.D. 1879.

ALFRED STEPHEN.

REPORT.

Sir, Sydney, 18 June, 1879.

The application of Mr. Frederick Mann, for Letters of Registration for "Improvements in the process of manufacturing Nitro-glycerine," having been referred to us, we have examined the specification and drawings accompanying the same, and have now the honor to report that we see no objection to the issue of Letters of Registration as prayed for.

We have, &c.,
J. SMITH.
CHAS. WATT.

The Principal Under Secretary.

[Drawings—one sheet.]

F MANN'S. PATENT.

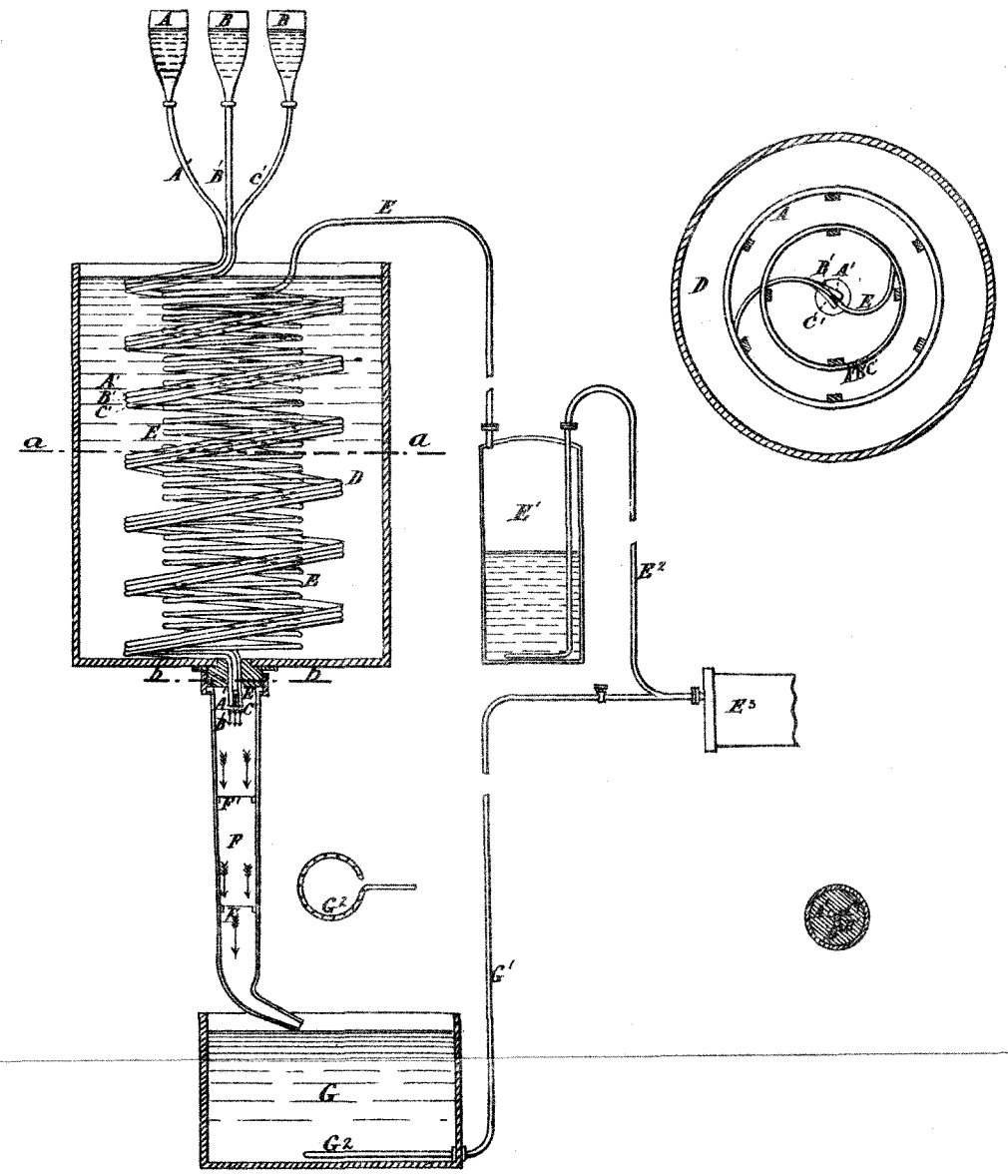

This is the Sheet of Drawings referred to in the annexed Letters of Registration granted to Frederick Mann this seventeenth day of July A.D. 1879

Alfred Stephen.

Sig: 198.

PHOTO-LITHOGRAPHED AT THE GOVT. PRINTING OFFICE, SYDNEY, NEW SOUTH WALES.

A.D. 1879, 17*th July*. No. 748.

IMPROVEMENTS IN THE STOPPERING OF AERATED WATER BOTTLES.

LETTERS OF REGISTRATION to Alfred Felton and Frederick Sheppard Grimwade, for Improvements in the Stoppering of Aerated Water Bottles.

[Registered on the 18th day of July, 1879, in pursuance of the Act 16 Vic. No. 24.]

BY His Excellency Sir Alfred Stephen, Knight Commander of the Most Distinguished Order of Saint Michael and Saint George, and a Companion of the Most Honorable Order of the Bath, Lieutenant-Governor of New South Wales.

TO ALL TO WHOM THESE PRESENTS SHALL COME, greeting:

WHEREAS Alfred Felton and Frederick Sheppard Grimwade, both of numbers 31 and 33, Flinders Lane West, in the City of Melbourne, and Colony of Victoria, wholesale chemists, have by their Petition humbly represented to me that they are the Assignees of Lambton Le Breton Mount, who is the author or designer of a certain invention or improvement in manufactures, that is to say, of an invention entitled "Improvements in the Stoppering of Aerated Water Bottles," which is more particularly described in the specification which is hereunto annexed and the drawings therein shown; and that they, the said Petitioners, have deposited with the Honorable the Treasurer of the said Colony of New South Wales the sum of Twenty Pounds sterling, for defraying the expense of granting these Letters of Registration, as required by the Act of Council, sixteenth Victoria, number twenty-four; and have humbly prayed that I would be pleased to grant Letters of Registration, whereby the exclusive enjoyment and advantage of the said invention or improvement might be secured to them for a period of fourteen years: And I, being willing to give encouragement to all inventions and improvements in the arts or manufactures which may be for the public good, and having received a report favourable to the prayer of the said Petition, from competent persons appointed by me to examine and consider the matters stated therein and to report thereon for my information, am pleased, with the advice of the Executive Council, and in exercise of the power and authority given to me by the said Act of Council, to grant, and do by these Letters of Registration grant unto the said Alfred Felton and Frederick Sheppard Grimwade, their executors, administrators, and assigns, the exclusive enjoyment and advantage of the said invention or improvement, for and during the term of fourteen years from the date hereof; to have, hold, and exercise unto the said Alfred Felton and Frederick Sheppard Grimwade, their executors, administrators, and assigns, the exclusive enjoyment and advantage thereof, for and during and unto the full end and term of fourteen years from the date of these presents next and immediately ensuing, and fully to be complete and ended: Provided always, that if the said Alfred Felton and Frederick Sheppard Grimwade, shall not, within three days after the granting of these Letters of Registration, register the same in the proper office in the Supreme Court, at Sydney, in the said Colony of New South Wales, then these Letters of Registration, and all advantages whatsoever hereby granted, shall cease and become void.

In witness whereof, I have hereunto set my sign manual, and have caused the present Letters of Registration to be sealed with the seal of the said Colony of New South Wales, at Government House, Sydney, in New South Wales, this seventeenth day of July, in the year of our Lord one thousand eight hundred and seventy-nine.

[L.S.] ALFRED STEPHEN,
Lieutenant-Governor,
Administering the Government of the said Colony.

A.D. 1879. No. 748.

Improvements in the Stoppering of Aerated Water Bottles.

SPECIFICATION of ALFRED FELTON and FREDERICK SHEPPARD GRIMWADE, both of Nos. 31 and 33, Flinders-lane West, in the City of Melbourne and Colony of Victoria, wholesale chemists, for an invention entitled "Improvements in the Stoppering of Aerated Water Bottles."

THIS invention consists in a novel construction of the upper part of the neck of aerated water bottles, and in a novel construction of washer to fit therein.

The washer has its inner face in the shape of a truncated cone, the base of which may be enlarged outwardly or not.

The bottles have the upper part of the neck also made with their inner face in the shape of a truncated cone, and, in the event of the base of the washer cone being enlarged, with recesses to receive such enlarged base, but in any case with a ledge on which to rest the washer.

The stopper used with such washers and bottles may be of any kind so long as they are circular in horizontal section, but by preference they should be spherical, and must be of such a size as, in the absence of the washer, to pass freely into the neck of the bottle.

The advantages of these improvements are:—First, that the bottles can be made cheaper by reason of the stoppers not having to be put in the bottle while it is being made; and, secondly, that the stopper can be placed in and withdrawn from the bottle at any time by simply removing the washer.

Referring to the drawings, figure 1 shows the improved plain cone washer in its place in one of the improved bottles, whilst figure 2 shows said washer with an enlarged base, and the bottle made to fit. In each case A is the washer and B the bottle, A^1 being the enlarged base of washer and B^1 the recess in the bottle to receive it.

The washers may be made of india-rubber, cork, or other compressible material, and by preference of even thickness throughout, although this latter condition is not absolutely essential.

We claim, in stoppering aerated water bottles—the truncated cone washer and the truncated cone for the inner face of the neck of the bottles, substantially as herein described and explained.

In witness whereof, we, the said Alfred Felton and Frederick Sheppard Grimwade, have hereto set our hands and seals, this twenty-first day of May, one thousand eight hundred and seventy-nine.

Witness—
EDWD. WATERS,
Patent Agent, Melbourne.

ALFRED FELTON.
F. S. GRIMWADE.

This is the specification referred to in the annexed Letters of Registration granted to Alfred Felton and Frederick Sheppard Grimwade, this seventeenth day of July, A.D. 1879.

ALFRED STEPHEN.

REPORT.

Sir,

Sydney, 16 May, 1879.

We do ourselves the honor to state that we see no objection to the issue of Letters of Registration in favour of Messrs. Alfred Felton and Frederick Sheppard Grimwade for an invention entitled "Improvements in Stoppering of Aerated Water Bottles," in terms of his Petition, specification, drawings, and claim, transmitted for our report under your blank cover communication of the 11th instant No. 4,403.

We have, &c.,
GOTHER K. MANN.
ROBERT GEO. MASSIE.

The Principal Under Secretary.

[Drawings—one sheet.]

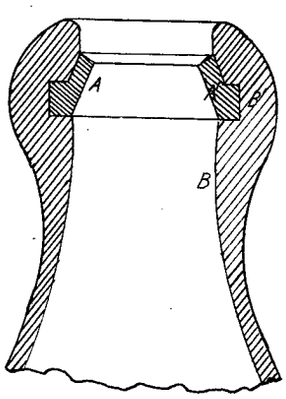

FIG. 2.

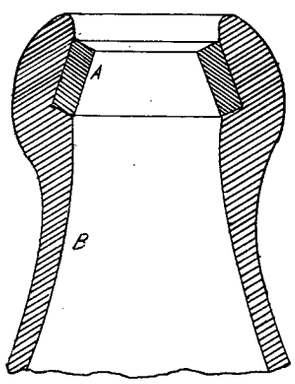

FIG. 1.

A.D. 1879, 22*nd July.* No. 749.

IMPROVEMENTS IN THE MANUFACTURE OF WIRE FENCING, &c.

LETTERS OF REGISTRATION to Thomas Ellis, for Improvements in the manufacture of Wire Fencing, and in the Wire used therefor.

[Registered on the 23rd day of July, 1879, in pursuance of the Act 16 Vic. No. 24.]

BY His Excellency Sir Alfred Stephen, Knight Commander of the Most Distinguished Order of Saint Michael and Saint George, and a Companion of the Most Honorable Order of the Bath, Lieutenant-Governor of New South Wales.

TO ALL TO WHOM THESE PRESENTS SHALL COME, greeting:

WHEREAS, Thomas Ellis, of Coatbridge, in the county of Lanark, in the United Kingdom of Great Britain and Ireland, iron wire manufacturer, hath by his Petition humbly represented to me that he is the author or designer of a certain invention or improvement in manufactures, that is to say, of an invention of "Improvements in the manufacture of Wire Fencing, and in the Wire used therefor," which is more particularly described in the specification and the sheet of drawings which are hereunto annexed; and that he, the said petitioner, hath deposited with the Honorable the Treasurer of the said Colony of New South Wales the sum of Twenty Pounds sterling, for defraying the expense of granting these Letters of Registration, as required by the Act of Council sixteenth Victoria, number twenty-four; and hath humbly prayed that I would be pleased to grant Letters of Registration, whereby the exclusive enjoyment and advantage of the said invention or improvement might be secured to him for a period of fourteen years: And I, being willing to give encouragement to all inventions and improvements in the arts or manufactures which may be for the public good, and having received a report favourable to the prayer of the said Petition, from competent persons appointed by me to examine and consider the matters stated therein and to report thereon for my information, am pleased, with the advice of the Executive Council, and in exercise of the power and authority given to me by the said Act of Council, to grant, and do by these Letters of Registration grant unto the said Thomas Ellis, his executors, administrators, and assigns, the exclusive enjoyment and advantage of the said invention or improvement, for and during the term of fourteen years from the date hereof; to have, hold, and exercise unto the said Thomas Ellis, his executors, administrators, and assigns, the exclusive enjoyment and advantage thereof, for and during and unto the full end and term of fourteen years from the date of these presents next and immediately ensuing, and fully to be complete and ended: Provided always, that if the said Thomas Ellis shall not, within three days after the granting of these Letters of Registration, register the same in the proper office in the Supreme Court, at Sydney, in the said Colony of New South Wales, then these Letters of Registration, and all advantages whatsoever hereby granted, shall cease and become void.

In witness whereof, I have hereunto set my sign manual, and have caused the present Letters of Registration to be sealed with the seal of the said Colony of New South Wales, at Government House, Sydney, in New South Wales, this twenty-second day of July, in the year of our Lord one thousand eight hundred and seventy-nine.

[L.S.]

ALFRED STEPHEN,
Lieutenant-Governor,
Administering the Government of the said Colony.

SPECIFICATION

Improvements in the manufacture of Wire Fencing, &c.

SPECIFICATION of THOMAS ELLIS, of Coatbridge, in the county of Lanark, in the United Kingdom of Great Britain and Ireland, iron wire manufacturer, for an invention of "Improvements in the manufacture of Wire Fencing, and in the Wire used therefor."

MY said invention relates to improvements in the manufacture or construction of wire fencing, and has for its object to cheapen the construction thereof, and to render the same a more effectual fence, through the wire portion thereof being made of a form which gives a greater sectional width or depth than what is obtainable with the same weight of metal when rolled into a circular oval or analogously curved form. By this means the greatest breadth of the wire so constructed being placed in a vertical position the lines of fence present a greater breadth to the eye of cattle, and are therefore more easily seen.

The wire for the purpose and effecting the objects aforementioned is rolled or formed with its sectional area composed of right or straight lines, and of which the forms most preferred are those of a triangle or a rhomboid or rhombus. Such sections of wire are represented in figure 1 of the accompanying drawings.

The wire is rolled or drawn in rolls and dies of the shape corresponding to the several straight or right-lined sections, and fencing is or hurdles for fencing are constructed therewith in any suitable or convenient manner; as for example at present adopted in the construction of fences or hurdles with round wire, and of which an example is represented in front elevation in figure 2.

Having now described and particularly ascertained the nature of my said invention, and the system, mode, or manner in or under which the same is or may be used or practically carried into effect, I would observe in conclusion that what I consider to be novel and original, and therefore claim is—

The hereinbefore described improvements in the manufacture of wire fencing, and in the wire used therefor, consisting in forming the said wire with its sectional area bounded by right or straight lines, said lines being so disposed in relation to each other as to give a maximum breadth or depth of wire, as herein described, and shown in the accompanying drawings.

In witness whereof, I, the said Thomas Ellis have to this my specification set my hand and seal, this thirteenth day of November, one thousand eight hundred and seventy-eight.

THOMAS ELLIS.

Signed and sealed in the presence of—
WM. HAMILTON, 2 Belmore Terrace,
P. SHIELDS,
THOMAS DAVIS,
Weir-street, Coatbridge.

This is the specification referred to in the annexed Letters of Registration granted to Thomas Ellis, this twenty-second day of July, A.D. 1879.

ALFRED STEPHEN.

REPORT.

Sydney, 26 June, 1879.

Sir,

We do ourselves the honor to state that we see no objection to the issue of Letters of Registration, securing to Mr. Thomas Ellis his "Improvements in the manufacture of Wire Fencing, and in the Wire used therefor," in accordance with the specification, Petition, drawings, and claim, transmitted for our report under your blank cover communication of the 24th instant, No. 4,676.

We have, &c.,
GOTHER K. MANN.
JAMES BARNET.

The Principal Under Secretary.

[Drawings—one sheet.]

1. Sheet

Fig. 1.



Fig. 2.

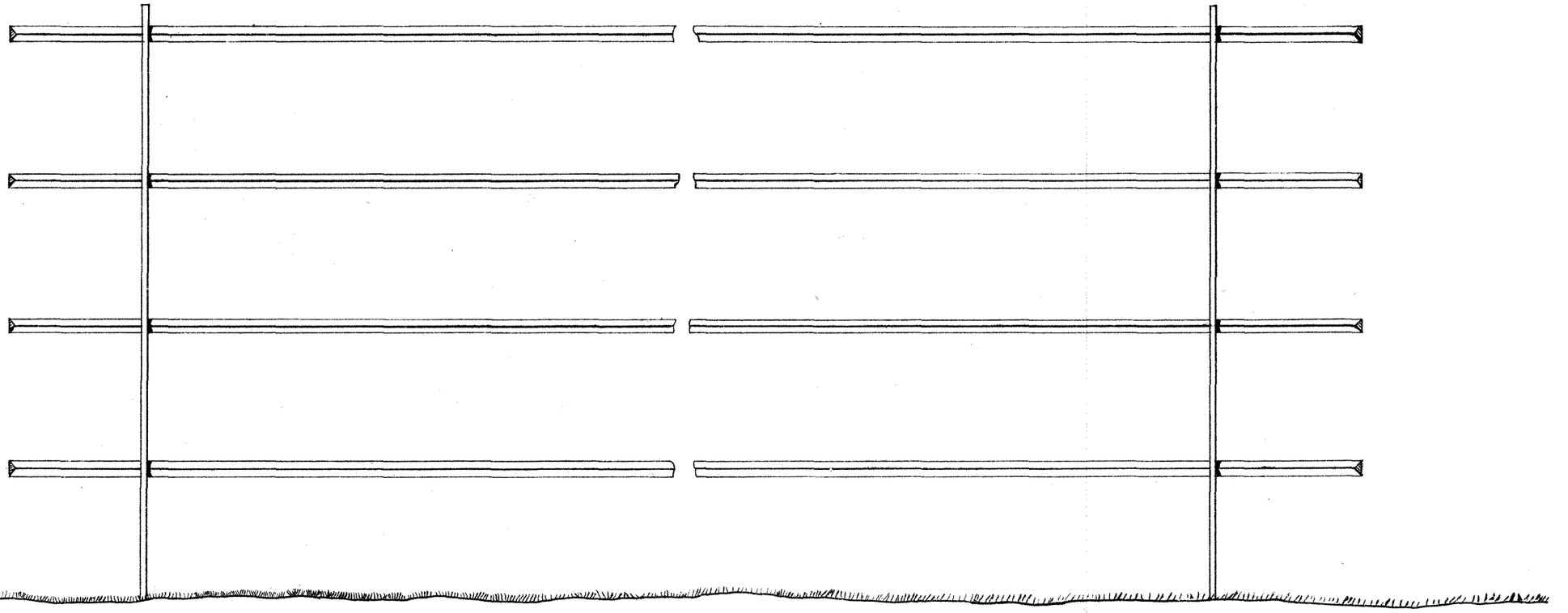

This is the Sheet of Drawings referred to in the annexed Letters of Registration, granted to Thomas Ellis, this twenty-second day of July, A.D. 1879.

Alfred Stephen.

(Sig: 198-)

A.D. 1879, 22*nd July.* No. 750.

AN IMPROVED COMPOSITION FOR PREVENTING AND REMOVING INCRUSTATION IN STEAM BOILERS.

LETTERS OF REGISTRATION to Ernest Boisson and Henry Coutonly, for an improved Composition for preventing and removing incrustation in Steam Boilers.

[Registered on the 23rd day of July, 1879, in pursuance of the Act 16 Vic. No. 24.]

BY His Excellency Sir Alfred Stephen, Knight Commander of the Most Distinguished Order of Saint Michael and Saint George, and a Companion of the Most Honorable Order of the Bath, Lieutenant-Governor of New South Wales.

TO ALL TO WHOM THESE PRESENTS SHALL COME, greeting:

WHEREAS Ernest Boisson, importer, and Henry Coutonly, engineer, both of Lonsdale-street East, in the city of Melbourne and Colony of Victoria, have by their Petition humbly represented to me that they are the authors or designers of a certain invention or improvement in manufactures, that is to say, of an invention entitled "An Improved Composition for preventing and removing Incrustation in Steam Boilers," which is more particularly described in the specification which is hereunto annexed; and that they, the said Petitioners, have deposited with the Honorable the Treasurer of the said Colony of New South Wales the sum of Twenty Pounds sterling, for defraying the expense of granting these Letters of Registration, as required by the Act of Council, sixteenth Victoria, number twenty-four; and have humbly prayed that I would be pleased to grant Letters of Registration, whereby the exclusive enjoyment and advantage of the said invention or improvement might be secured to them for a period of fourteen years: And I, being willing to give encouragement to all inventions and improvements in the arts or manufactures which may be for the public good, and having received a report favourable to the prayer of the said Petition, from competent persons appointed by me to examine and consider the matters stated therein and to report thereon for my information, am pleased, with the advice of the Executive Council, and in exercise of the power and authority given to me by the said Act of Council, to grant, and do by these Letters of Registration grant unto the said Ernest Boisson and Henry Coutonly, their executors, administrators, and assigns, the exclusive enjoyment and advantage of the said invention or improvement, for and during the term of fourteen years from the date hereof; to have, hold, and exercise unto the said Ernest Boisson and Henry Coutonly, their executors, administrators, and assigns, the exclusive enjoyment and advantage thereof, for and during and unto the full end and term of fourteen years from the date of these presents next and immediately ensuing, and fully to be complete and ended: Provided always, that if the said Ernest Boisson and Henry Coutonly shall not, within three days after the granting of these Letters of Registration, register the same in the proper office in the Supreme Court, in the said Colony of New South Wales, then these Letters of Registration, and all advantages whatsoever hereby granted, shall cease and become void.

In witness whereof, I have hereunto set my sign manual, and have caused the present Letters of Registration to be sealed with the seal of the said Colony of New South Wales, at Government House, Sydney, in New South Wales, this twenty-second day of July, in the year of our Lord one thousand eight hundred and seventy-nine.

[L.S.] ALFRED STEPHEN,
Lieutenant-Governor,
Administering the Government of the said Colony.

A.D. 1879. No. 750.

Improved Composition for preventing and removing Incrustation in Steam Boilers.

SPECIFICATION of ERNEST BOISSON, importer, and HENRY COUTONLY, engineer, both of Lonsdale-street East, in the city of Melbourne and Colony of Victoria, for an invention entitled "An improved Composition for preventing and removing Incrustation in Steam Boilers."

VARIOUS compositions have been invented and patented for the purpose of accomplishing the same object as this invention, but have all been more or less unsuccessful, although made or said to be made from astringent bark, gums, or vegetable matter. One of the last inventions of this description consists of a composition prepared by a succession of infusions of wattle-bark and decantation of the liquor. Now this composition and others of a similar character we have found ineffective; we have therefore invented an improved composition, which we make from wattle-bark and starch, not by a succession of infusions and decantations but at one boiling, thus:—

We take by weight thirty (30) parts of wattle-bark, ten (10) parts of starch, and sixty (60) parts of water; these we boil together for about two hours, stirring them about meanwhile, so as to thoroughly mix them. The liquor thus produced, when cold, is ready for use, and may be put into barrels or other suitable receptacles for transport and use.

If it be necessary to reduce the bulk of our composition, we evaporate the above liquid to dryness and reduce it to powder. Inasmuch, however, as it is cheaper to make it in a liquid form, we intend so to use it, except when special circumstances demand that it should be made into a powder.

The quantity used must be determined by the state of the boiler; but, as an illustration, we would use five (5) gallons of our liquid composition for removing the incrustation on a very dirty 60-horse power boiler, and about two (2) gallons per week afterwards, to prevent fresh incrustation. About one pound of our powdered composition would be an equivalent for five (5) gallons of the liquid. We desire to state that we have tried isinglass and other substitutes for the starch in our composition, but have found them all more or less ineffective, starch being far superior to them all.

Having thus described the nature of our invention and the manner of using it, we would have it understood that we do not claim the exclusive use of astringent gums, bark, or vegetable matter in disincrusting composition; but what we do claim is the combination of wattle-bark and starch in the manner herein set forth and explained, for the purpose of producing a composition which will prevent and remove incrustation in steam-boilers.

In witness whereof, we, the said Ernest Boisson and Henry Coutonly, have hereto set our hands and seals, this twenty-seventh day of May, one thousand eight hundred and seventy-nine.

Witness—
EDWD. WATERS,
Patent Agent, Melbourne.

E. BOISSON.
H. COUTONLY.

This is the specification referred to in the annexed Letters of Registration granted to Ernest Boisson and Henry Coutonly, this twenty-second day of July, A.D. 1879.

ALFRED STEPHEN.

REPORT.

Sir,

Sydney, 9 June, 1879.

We do ourselves the honor to state that we see no objection to the issue of Letters of Registration in favour of Ernest Boisson and Henry Coutonly, for their "Improved Composition for preventing and removing Incrustation in Steam Boilers," in terms of their Petition, specification, and claim, transmitted for our report, under your blank cover communication of the 2nd instant, No. 4,080.

We have, &c.,
GOTHER K. MANN.
H. BRODERICK.

The Principal Under Secretary.

A.D. 1879, 22*nd July*. No. 751.

IMPROVEMENTS IN SELF-ACTING GRAPPLE BUCKETS, FORKS, &c.

LETTERS OF REGISTRATION to William Dent Priestman and Samuel Priestman, for Improvements in and appertaining to Self-acting Grapple Buckets, Forks, &c.

[Registered on the 23rd day of July, 1879, in pursuance of the Act 16 Vic. No. 24.]

BY His Excellency Sir Alfred Stephen, Knight Commander of the Most Distinguished Order of Saint Michael and Saint George, and a Companion of the Most Honorable Order of the Bath, Lieutenant-Governor of New South Wales.

TO ALL TO WHOM THESE PRESENTS SHALL COME, greeting:

WHEREAS William Dent Priestman and Samuel Priestman, both of Kingston-upon-Hull, in the county of York, England, engineers, have by their Petition humbly represented to me that they are the authors or designers of a certain invention or improvement in manufactures, that is to say, of an invention entitled "Improvements in and appertaining to Self-acting Grapple Buckets, Forks, &c.," which is more particularly described in the specification, marked A, and the five sheets of drawings, marked B, C, D, E, and F, respectively, which are hereunto annexed; and that they, the said Petitioners, have deposited with the Honorable the Treasurer of the said Colony of New South Wales the sum of Twenty Pounds sterling, for defraying the expense of granting these Letters of Registration, as required by the Act of Council, sixteenth Victoria, number twenty-four; and have humbly prayed that I would be pleased to grant Letters of Registration, whereby the exclusive enjoyment and advantage of the said invention or improvement might be secured to them for a period of fourteen years: And I, being willing to give encouragement to all inventions and improvements in the arts or manufactures which may be for the public good, and having received a report favourable to the prayer of the said Petition, from competent persons appointed by me to examine and consider the matters stated therein and to report thereon for my information, am pleased, with the advice of the Executive Council, and in exercise of the power and authority given to me by the said Act of Council, to grant, and do by these Letters of Registration grant unto the said William Dent Priestman and Samuel Priestman, their executors, administrators, and assigns, the exclusive enjoyment and advantage of the said invention or improvement, for and during the term of fourteen years from the date hereof; to have, hold, and exercise unto the said William Dent Priestman and Samuel Priestman, their executors, administrators, and assigns, the exclusive enjoyment and advantage thereof, for and during and unto the full end and term of fourteen years from the date of these presents next and immediately ensuing, and fully to be complete and ended: Provided always, that if the said William Dent Priestman and Samuel Priestman shall not, within three days after the granting of these Letters of Registration, register the same in the proper office in the Supreme Court, at Sydney, in the said Colony of New South Wales, then these Letters of Registration, and all advantages whatsoever hereby granted, shall cease and become void.

In witness whereof, I have hereunto set my sign manual, and have caused the present Letters of Registration to be sealed with the seal of the said Colony of New South Wales, at Government House, Sydney, in New South Wales, this twenty-second day of July, in the year of our Lord one thousand eight hundred and seventy-nine.

[L.S.]

ALFRED STEPHEN,
Lieutenant-Governor,
Administering the Government of the said Colony.

A.D. 1879. No. 751.

Improvements in Self-acting Grapple Buckets, Forks, &c.

A.

SPECIFICATION of WILLIAM DENT PRIESTMAN and SAMUEL PRIESTMAN, both of Kingston-upon-Hull, in the county of York, England, engineers, for an Invention entitled "Improvements in and appertaining to Self-acting Grapple Buckets, Forks, &c.," with arrangements for working the same on any kind of grapple buckets, grabs, &c.

Our invention relates to a self-acting grapple bucket, grab, fork, digger, or by what other name it may be termed, with certain arrangements for working the same under the various conditions that they may be used. The system of working these buckets, &c., may also be equally applicable for working *all kinds* of self-acting grapple buckets, whether included under these patents or not.

Drawing No. 1 represents the buckets and grabs; these are similar in action, the difference being that for soft loose material the bucket is used as at A, whilst in hard material the grab B is used with long tines secured either in the manner shown or in some similar one. The action of the buckets and grabs are as follows:—The levers C′C″C‴C⁗ are fixed to the side frames or ends of the buckets or grabs, which are made to open and close as shown in the drawing. The side frames are worked upon the joints at D′D″, and are held together by the frame E. The barrel shaft N is supported in the frame E. The levers C′C″C‴C⁗ are connected to the barrels G and H, fixed upon the shaft by the chains I′I″I‴I⁗. The buckets are worked by two chains K L; the filling and lifting chain K is attached to the barrel F fixed upon the shaft N, while the opening and lowering chain L is fixed to the side of the bucket, or to any more convenient part which shall secure the object in view. The action may be thus described:—By holding the chain L and letting K run loose, the bucket opens, winding K into the barrel F, and the chains I unwind off the barrels GH, the bucket is then lowered open into the material required to be lifted; the chain L is then left at liberty, and K is hauled upon, which winds it off the barrel F and the chains I on to barrels G and H, which closes the bucket, drawing it down at the same time into the material and is filled.

Sheets Nos. 2, 3, 4, and 5 relate to various easy and ready methods for working the buckets, grab diggers, &c.

Drawing No. 2 represents a double-barrelled crane with flat or V frictional gearing, the barrel shafts A′A″ being made to cant in order that the frictions may be lifted or lowered as the case may be by lifting the frictions B′B″ on the shafts A′A″ by means of the lever C′C″ and pressing them against the smaller friction D′D″ on the shaft E, then power is given to the handles F′F″ to lift as required; brake blocks G′G″ are provided and fixed below the friction sheaves, so that by lowering the frictions B′B″ they can be readily and securely held by the levers C C.

Drawing No. 3 shows the same principle as No. 2, so far as the barrel is concerned, with the exception that instead of lifting the shaft A by the lever C, as shown in sheet No. 2, the shaft A is secured in an eccentric disc at each end, and lifted and lowered by the lever B, which is secured to the eccentric disc at the end of shaft next the frictional wheel. No. 3 sheet also shows an improved method for working the second or opening chain as is represented at C, thereby dispensing with second barrel, and is a ready method of applying the buckets or grabs to ordinary cranes, whether steam, hydraulic, or hand, the details being altered to suit the position in which it is required to place it as in sheet No. 4; for instance, C′ is a fixed bracket with a number of sheaves set side by side, C″ is a movable bracket fixed to a balance weight, having projecting flangs to keep it in position in the slide bracket C′. The number of sheaves and height of the bracket C′ depends entirely upon the depth at which it is required to work the bucket or grab. L is a brake bracket in which is fixed the brake sheave I and the chain sheave G (H is the lever fixed to the brake strap); E K is the second sheave fixed at the jib head to carry the opening chain M. The action of the crane may be described as follows:—Supposing the bucket to be closed just below the jib, the lever H is pushed over, securing the brake which holds the chain sheave G, thus securing chain M. The lever B is lowered, taking the friction off the brake, allowing the chain to run loose, causing the bucket to open. The pressure is slightly reduced in the lever H, which allows the chain M to descend and lowers the bucket or grab open into the material to be lifted. In this operation the bucket would cause the weight C to ascend, paying out the chain required. The lever H is then left at liberty and the lever B is pressed down, bringing the frictions together and so putting the barrel in motion, winding up the chain N, which winds off the barrel F (fig. 1) causing the side chains C′C″C‴C⁗ to wind on to the side barrels G H (fig. 1), and so closing the bucket or grab, at the same time causing it to fill with the material to be lifted or excavated, &c., and after being drawn up is ready for a similar operation.

Drawing No. 4 represents another arrangement by which the block gearing described in fig. 3 may be used on hydraulic or other cranes.

Drawing No. 5 represents similar principle of working the discharging chain L, but instead of using a balance weight to bring back the loose chain a steam or hydraulic ram A is employed, the ram having sheaves fitted to it, the number of sheaves and length of ram depending upon the length of chain it is necessary to pay out in working the bucket.

What we include as coming under our patents is the system of working self-acting buckets, forks, diggers, excavators, or by whatsoever name they may be termed, as described and shown in drawing No. 1, and the manner in which these or any other kind of grapple buckets, forks, grabs, &c., may be worked, shown in the drawing Nos. 2, 3, 4, and 5, or in any other manner in which the same system can be employed.

WILLIAM DENT PRIESTMAN,
By his attorney, OWEN BLACKET.

WM. DAVY.

SAMUEL PRIESTMAN,
By his attorney, OWEN BLACKET.

WM. DAVY.

This is the specification, marked A, referred to in the annexed Letters of Registration granted to William Dent Priestman and Samuel Priestman, this twenty-second day of July, A.D. 1879.

ALFRED STEPHEN.

REPORT.

Improvements in Self-acting Grapple Buckets, Forks, &c.

REPORT.

Sir, Sydney, 26 June, 1879.

We do ourselves the honor to state that we see no objection to the issue of Letters of Registration securing to Messrs. William Dent Priestman and Samuel Priestman their invention entitled "Improvements in and appertaining to Self-acting Grapple Buckets, Forks, &c.," in accordance with their Petition, specification, drawings, and claim, transmitted for our report under your blank cover communication of the 19th instant, No. 4,580.

We have, &c.,
GOTHER K. MANN.
JAMES BARNET, Col. Archt.

The Principal Under Secretary.

[Drawings—five sheets.]

Nº I.

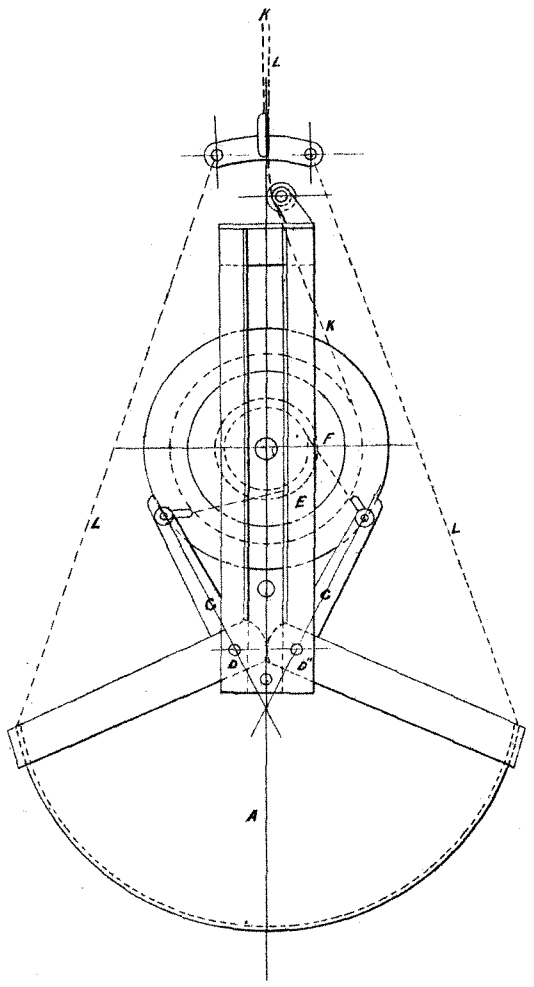

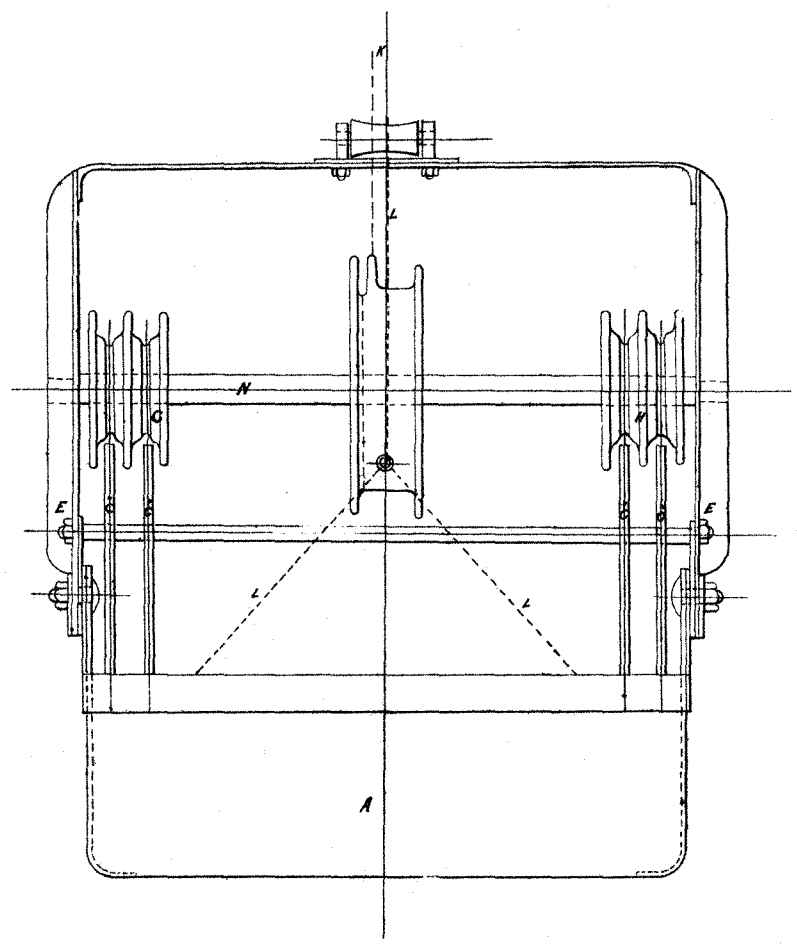

William Dent Priestman
by his attorney Owen Blacket
Wm Davy

Samuel Priestman
by his attorney Owen Blacket
Wm Davy

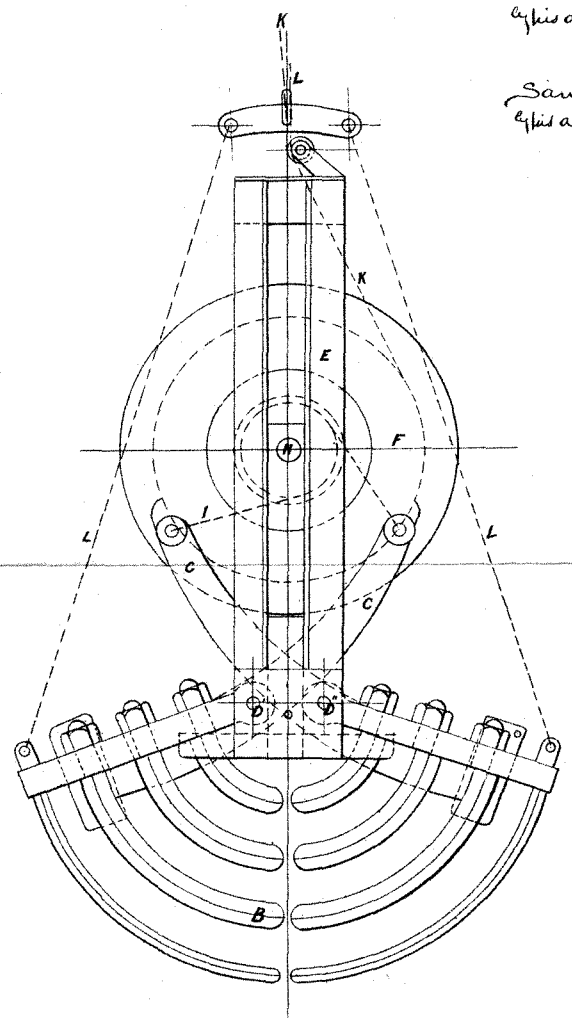

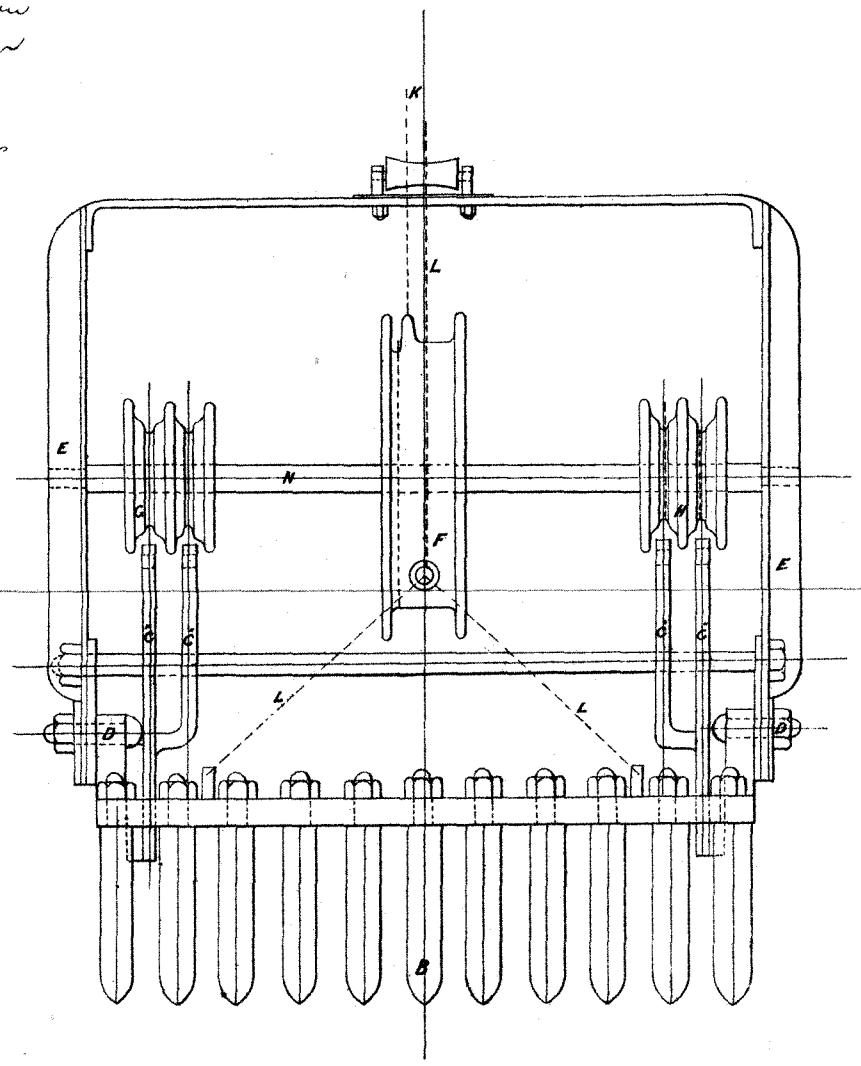

This is the Sheet of Drawings marked B. referred to in the annexed Letters of Registration granted to William Dent Priestman, and Samuel Priestman, this twenty second day of July A.D. 1879. *Alfred Stephen.*

PHOTO-LITHOGRAPHED AT THE GOVT. PRINTING OFFICE,
SYDNEY, NEW SOUTH WALES.

N° 2.

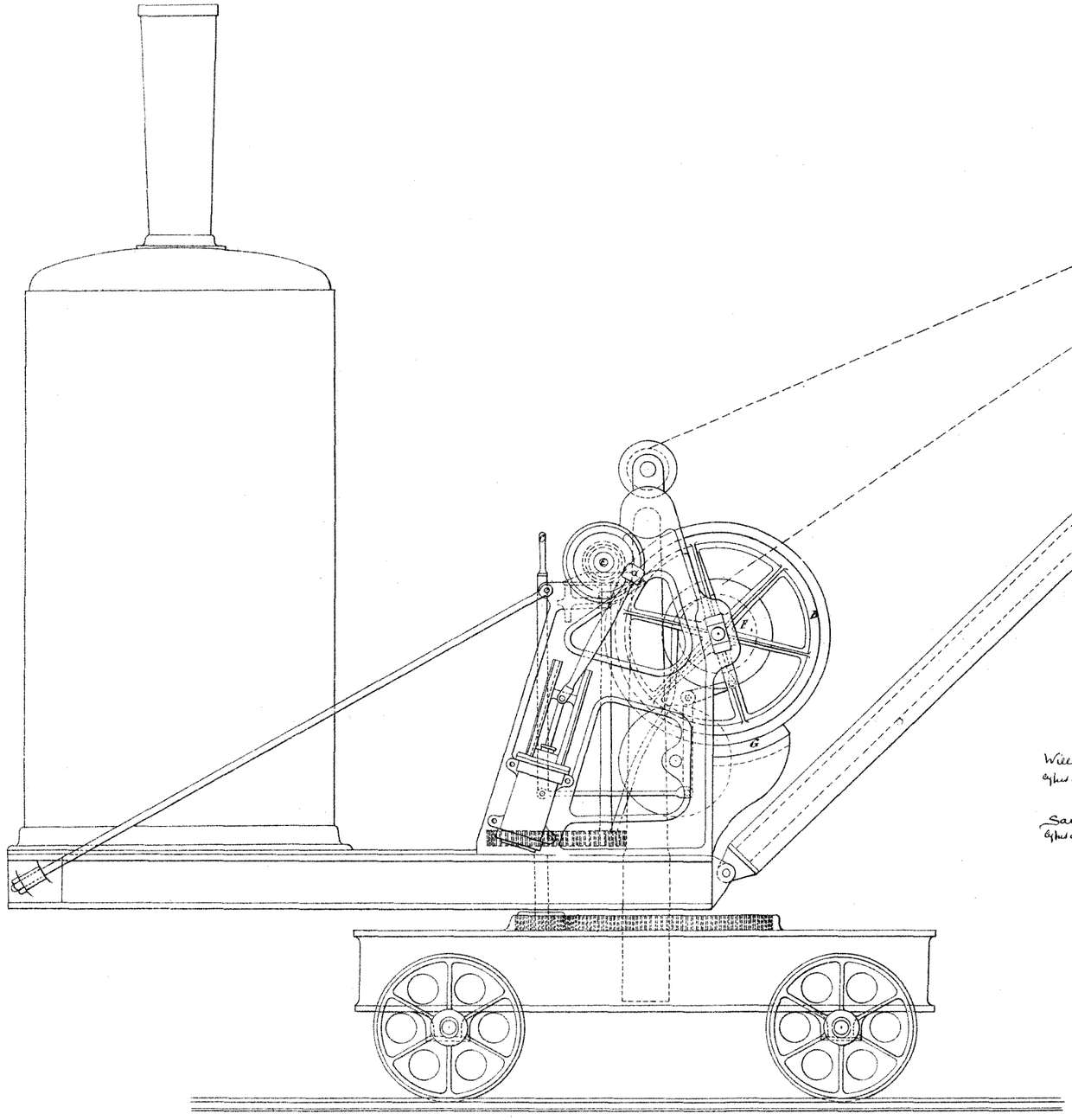

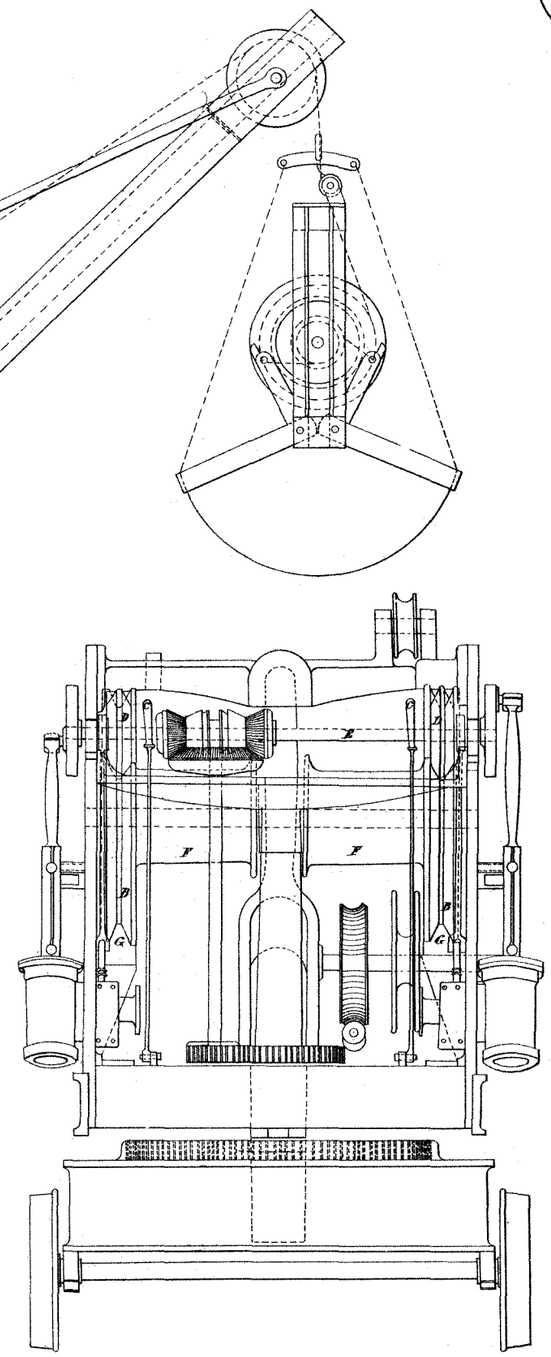

William Dent Priestman
by his attorney Gwent Blackett
Wm Davy

Samuel Priestman
by his attorney Gwent Blackett
Wm Davy

This is the Sheet of Drawings marked C. referred to in the annexed Letters of Registration granted to William Dent Priestman, and Samuel Priestman this twenty second day of July A. D. 1879.

Alfred Stephen.

PHOTO-LITHOGRAPHED AT THE GOVT. PRINTING OFFICE, SYDNEY, NEW SOUTH WALES.

D.

Nº 3

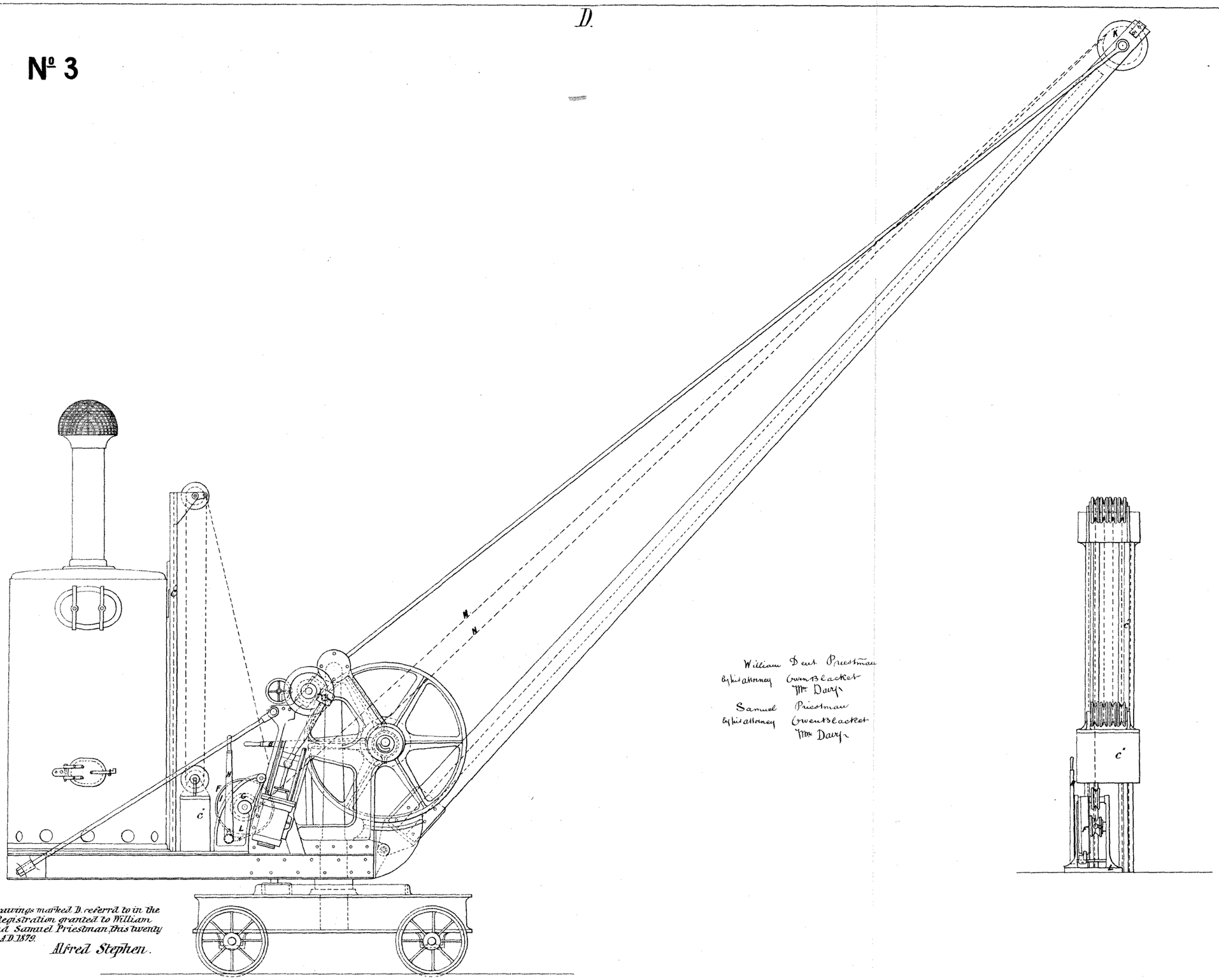

William Dent Priestman
by his attorney Owen Blacket
Mr Davy

Samuel Priestman
by his attorney Owen Blacket
Mr Davy

This is the Sheet of Drawings marked D. referrd to in the annexed Letters of Registration granted to William Dent Priestman, and Samuel Priestman, this twenty second day of July A.D. 1879.

Alfred Stephen.

Sig: 198.

PHOTO-LITHOGRAPHED AT THE GOVT. PRINTING OFFICE.
SYDNEY, NEW SOUTH WALES.

Nº 4.

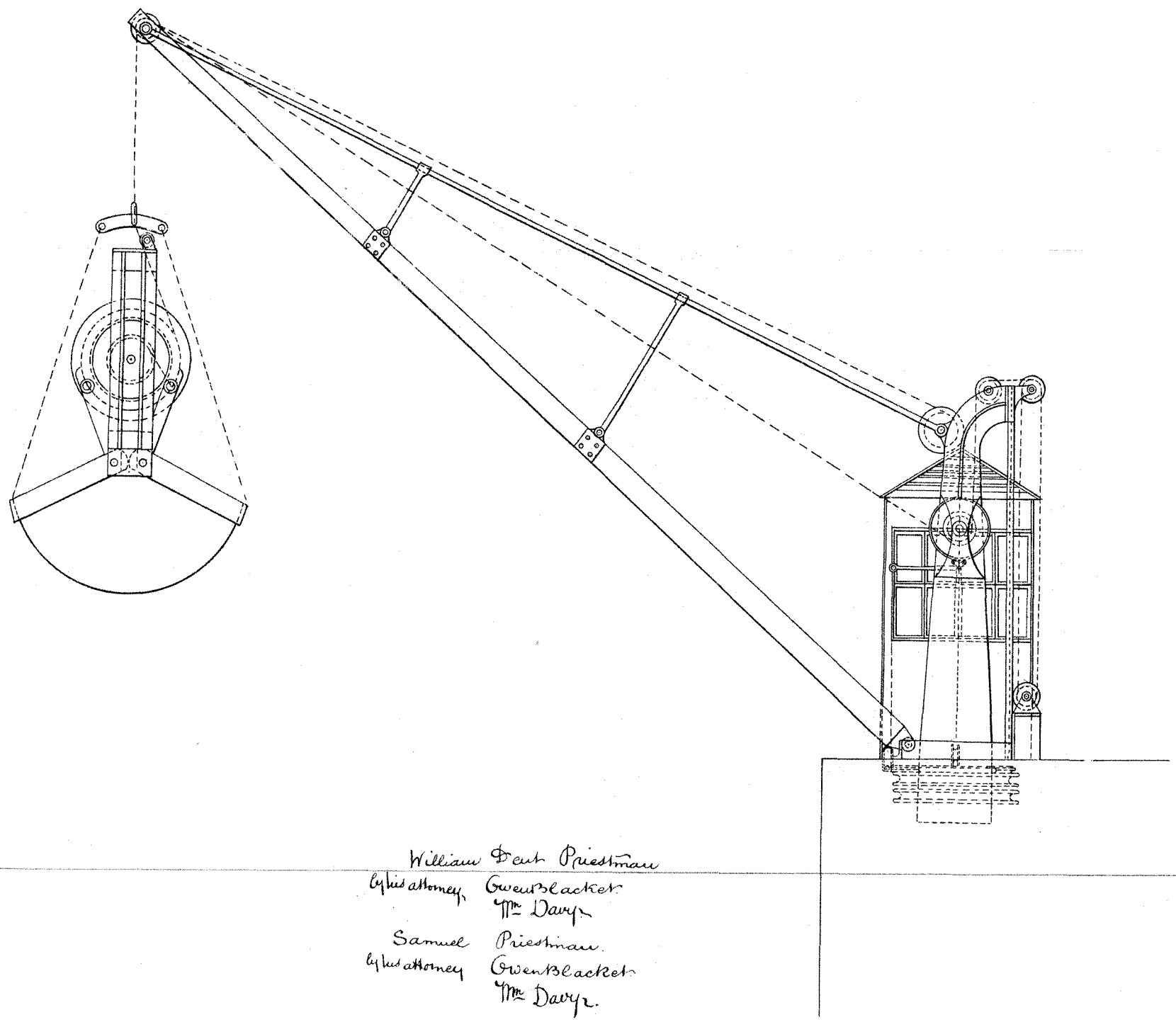

William Dent Priestman
by his attorney, Owen Blacket
Mc Darye

Samuel Priestman.
by his attorney Owen Blacket
Mc Darye.

This is the Sheet of Drawings marked E referred to in the annexed Letters of Registration granted to William Dent Priestman and Samuel Priestman, this twenty second day of July A.D. 1879.

Alfred Stephen.

Sig: 198.

PHOTO-LITHOGRAPHED AT THE GOVT. PRINTING OFFICE, SYDNEY, NEW SOUTH WALES.

Nº 5

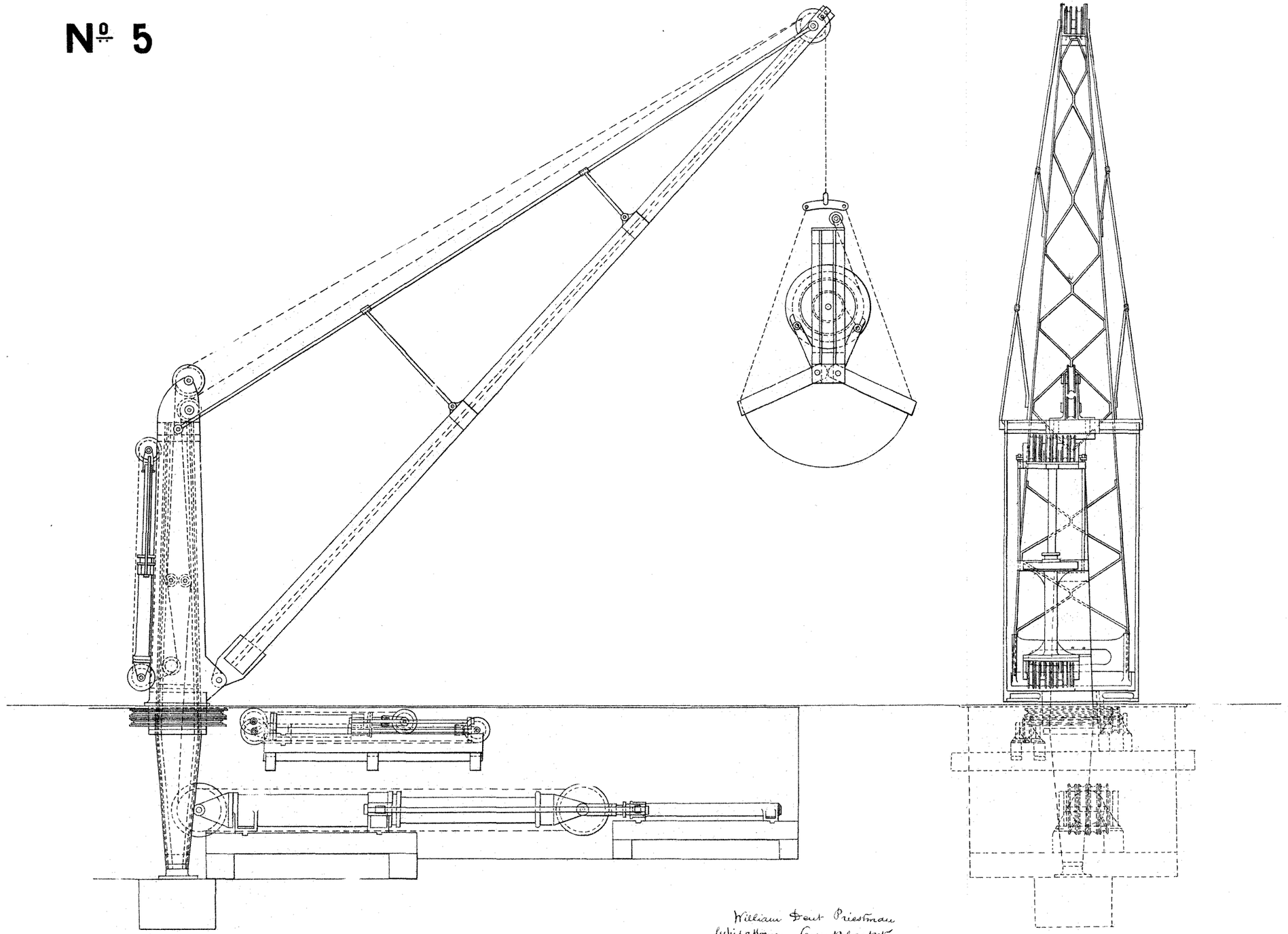

This is the Sheet of Drawings marked F referred to in the annexed Letters of Registration granted to William Dent Priestman, and Samuel Priestman, this twenty second day of July A.D 1879.

Alfred Stephen.

William Dent Priestman
by his attorney Gwen Blacket
Wm Dary

Samuel Priestman
by his attorney Gwen Blacket
Wm Dary

PHOTO-LITHOGRAPHED AT THE GOVT. PRINTING OFFICE, SYDNEY, NEW SOUTH WALES.

A.D. 1879, 28*th July*. No. 752.

IMPROVED METHOD OF PACKING AND PRESERVING MEAT AND OTHER ANIMAL FOOD.

LETTERS OF REGISTRATION to Archibald Liversidge, for an Improved Process for the Packing and Preservation of Meat and other Animal Food in Vegetable Parchment or in insoluble Gelatine.

[Registered on the 28th day of July, 1879, in pursuance of the Act 16 Vic. No. 24.]

BY HIS EXCELLENCY SIR ALFRED STEPHEN, Knight Commander of the Most Distinguished Order of Saint Michael and Saint George, and a Companion of the Most Honorable Order of the Bath, Lieutenant-Governor of New South Wales.

TO ALL TO WHOM THESE PRESENTS SHALL COME, greeting:

WHEREAS ARCHIBALD LIVERSIDGE, Professor of Geology and Mineralogy in the University of Sydney, New South Wales, hath by his Petition humbly represented to me that he is the author or designer of a certain invention or improvement in manufactures, that is to say, of an invention of an "Improved Process for the Packing and Preservation of Meat and other Animal Food in Vegetable Parchment or in insoluble Gelatine," which is more particularly described in the specification which is hereunto annexed; and that he, the said Petitioner, hath deposited with the Honorable the Treasurer of the said Colony of New South Wales the sum of Twenty Pounds sterling, for defraying the expense of granting these Letters of Registration, as required by the Act of Council, sixteenth Victoria, number twenty-four; and hath humbly prayed that I would be pleased to grant Letters of Registration, whereby the exclusive enjoyment and advantage of the said invention or improvement might be secured to him for a period of fourteen years: And I, being willing to give encouragement to all inventions and improvements in the arts or manufactures which may be for the public good, and having received a report favourable to the prayer of the said Petition, from competent persons appointed by me to examine and consider the matters stated therein and to report thereon for my information, am pleased, with the advice of the Executive Council; and in exercise of the power and authority given to me by the said Act of Council, to grant, and do by these Letters of Registration grant unto the said Archibald Liversidge, his executors, administrators, and assigns, the exclusive enjoyment and advantage of the said invention or improvement, for and during the term of fourteen years from the date hereof; to have, hold, and exercise unto the said Archibald Liversidge, his executors, administrators, and assigns, the exclusive enjoyment and advantage thereof, for and during and unto the full end and term of fourteen years from the date of these presents next and immediately ensuing, and fully to be complete and ended: Provided always, that if the said Archibald Liversidge shall not, within three days after the granting of these Letters of Registration, register the same in the proper office in the Supreme Court, at Sydney, in the said Colony of New South Wales, then these Letters of Registration, and all advantages whatsoever hereby granted, shall cease and become void.

In witness whereof, I have hereunto set my sign manual, and have caused the present Letters of Registration to be sealed with the seal of the said Colony of New South Wales, at Government House, Sydney, in New South Wales, this twenty-eighth day of July, in the year of our Lord one thousand eight hundred and seventy-nine.

[L.S.]

ALFRED STEPHEN,
Lieutenant-Governor,
Administering the Government of the said Colony.

SPECIFICATION

A.D. 1879. No. 752.

Improved Method of Packing and Preserving Meat and other Animal Food.

SPECIFICATION of an Invention or Improvement for the Packing and Preservation of Meat and other Animal Food, by ARCHIBALD LIVERSIDGE, Professor of Geology and Mineralogy in the University of Sydney, New South Wales.

MY invention or improvement consists in the use of an envelope or covering for meat and other animal food, composed of vegetable parchment or of gelatine rendered insoluble in water by treatment with bichromate of potassium, or other similar means, in place of the tinned iron cylinders, canisters, or other receptacles commonly used for the packing and preservation of meat, and usually known as "tins."

The meat or other animal food, compressed or uncompressed, is placed in the envelope of vegetable parchment or of insoluble gelatine either in the cooked or the uncooked state; but in the case of roasted or baked meat it is placed in the envelope after roasting or baking, as the case may be.

The advantages which I claim for this invention are—

1st. This method is cheaper and more expeditious than the usual process of soldering the meat up in tins, while the meat or other animal food is equally well protected from the air and all tendency to putrify or become unwholesome.

2nd. The meat packed in vegetable parchment or insoluble gelatine can be roasted, spiced, corned, or otherwise prepared, in the same manner as when tins are employed.

3rd. By this process there is not the same liability to overcook.

4th. The envelope or covering is quite innocuous, and, moreover, its use avoids the dangers attendant upon the employment of solders and of impure tin containing lead or other poisonous metals.

5th. The meat preserved by this method is in a packing more convenient to the *producer*, inasmuch as the envelopes or covers can be made of any size and of any proportions; hence the meat, fish, poultry, game, or other food, need not be cut up, or its appearance otherwise destroyed, in order to transfer it to a receptacle of fixed proportions and made of rigid materials, as is sometimes the case where metal cylinders are employed.

6th. The envelope can be made of any requisite length, strength, or substance, and either with or without a longitudinal seam—*i.e.*, it can be made in tubes of any dimensions, and without joint, seam, or line of junction along their length. The openings at the ends can be closed by ordinary methods, and either under ordinary conditions, in a vacuum, or in an atmosphere of a gas like sulphurous acid.

7th. The meat is by this process in a packing more convenient to the *consumer*, since it can be put up in quantities of any amount, larger or smaller, according to the requirements of the market or trade. The envelope or covering costs so little that packages of (say) only 1 or 2 ounces in weight can be economically supplied.

8th. No instrument beyond an ordinary knife (table knife) is required to open the envelope or covering, which can be either stripped off or cut through in strips with the slices of meat as it is consumed.

9th. The flexibility and compressibility of these envelopes permit of great saving of space in packing for shipment or transport.

What I claim as my invention or improvement in the packing and preservation of meat and other animal food, compressed or uncompressed, cooked or uncooked, is the method of encasing or surrounding the same in an envelope or covering of vegetable parchment or of insoluble gelatine.

28 June, 1879. ARCHD. LIVERSIDGE.

This is the specification referred to in the annexed Letters of Registration granted to Archibald Liversidge, this twenty-eighth day of July, A.D. 1879.

ALFRED STEPHEN.

REPORT.

Sydney, 5 July, 1879.

Sir,

In the matter of the application of Professor Liversidge for Letters of Registration for "An Improved Method of Packing and Preserving Meat and other Animal Food," which has been referred to us, we have examined the specification accompanying the same, and have now the honor to report that we see no objection to the issue of Letters of Registration as prayed for.

We have, &c.,

J. SMITH.

CHAS. WATT.

The Principal Under Secretary.

A.D. 1879, 4*th August.* No. 753.

IMPROVEMENTS IN MACHINERY FOR CUTTING THORN AND OTHER HEDGES.

LETTERS OF REGISTRATION to James Hornsby and William Hornsby, for Improvements in Machinery for cutting Thorn and other Hedges.

[Registered on the 6th day of August, 1879, in pursuance of the Act 16 Vic. No. 24.]

BY HIS EXCELLENCY SIR ALFRED STEPHEN, Knight Commander of the Most Distinguished Order of Saint Michael and Saint George, and a Companion of the Most Honorable Order of the Bath, Lieutenant-Governor of New South Wales.

TO ALL TO WHOM THESE PRESENTS SHALL COME, greeting:

WHEREAS JAMES HORNSBY and WILLIAM HORNSBY, both of Grantham, in the county of Lincoln, in England, have by their Petition humbly represented to me that they are the assignees of George Agars Walker, of Dane's Hill, near Retford, in the County of Nottingham, England, who is the author or designer of a certain invention or improvement in manufactures, that is to say, of an invention for "A new or improved Machine or Apparatus for cutting Thorn and other similar Hedges and Fences"; and whereas in the said Petition it is alleged that the said James Hornsby, together with John Innocent, George Thomas Rutter, and Ralph Appleby, of Spittlegate, in the county of Lincoln, are the authors or designers of an invention for "Improvements in Machinery for cutting or clipping Thorn or other Hedges," and that the interest of the said John Innocent, George Thomas Rutter, and Ralph Appleby, in the said last-mentioned invention, and to Letters Patent or Letters of Registration thereof in the Colony of New South Wales, has been duly assigned to and now belongs to the said James Hornsby; and it is also in the said Petition alleged that the said James Hornsby and William Hornsby have combined the said two inventions in one specification, in which the combined invention is entitled "Improvements in Machinery for cutting Thorn and other Hedges," and which is more particularly described in the said, specification and in the sheet of drawings which are hereunto annexed; and that they, the said Petitioners, have deposited with the Honorable the Treasurer of the said Colony of New South Wales the sum of Twenty Pounds sterling, for defraying the expense of granting these Letters of Registration, as required by the Act of Council, sixteenth Victoria, number twenty-four; and have humbly prayed that I would be pleased to grant Letters of Registration, whereby the exclusive enjoyment and advantage of the said combined invention or improvement might be secured to them for a period of fourteen years: And I, being willing to give encouragement to all inventions and improvements in the arts or manufactures which may be for the public good, and having received a report favourable to the prayer of the said Petition, from competent persons appointed by me to examine and consider the matters stated therein and to report thereon for my information, am pleased, with the advice of the Executive Council, and in exercise of the power and authority given to me by the said Act of Council, to grant, and do by these Letters of Registration grant unto the said James Hornsby and William Hornsby, their executors, administrators, and assigns, the exclusive enjoyment and advantage of the said combined invention or improvement, for and during the term of fourteen years from the date hereof; to have, hold, and exercise unto the said James Hornsby and William Hornsby, their executors, administrators, and assigns, the exclusive enjoyment and advantage thereof, for and during and unto the full end and term of fourteen years from the date of these presents next and immediately ensuing, and fully to be complete and ended: Provided always, that if the said James Hornsby and William Hornsby shall not, within three days after the granting of these Letters of Registration, register the same in the proper office in the Supreme Court, at Sydney, in the said Colony of New South Wales, then these Letters of Registration, and all advantages whatsoever hereby granted, shall cease and become void.

In witness whereof, I have hereunto set my sign manual, and have caused the present Letters of Registration to be sealed with the seal of the said Colony of New South Wales, at Government House, Sydney, in New South Wales, this fourth day of August, in the year of our Lord one thousand eight hundred and seventy-nine.

[L.S.]

ALFRED STEPHEN,
Lieutenant-Governor,
Administering the Government of the said Colony.

SPECIFICATION

Improvements in Machinery for cutting Thorn and other Hedges.

SPECIFICATION of JAMES HORNSBY and WILLIAM HORNSBY, both of Spittlegate, near Grantham, in the county of Lincoln, in England, for an invention entitled "Improvements in Machinery for cutting Thorn and other Hedges."

THIS invention has for its object the cutting of thorn and other hedges, which operation has hitherto been effected by manual labour. For this purpose, according to one arrangement of the invention, suitable machinery is attached to or combined with the ordinary farmer's cart.

To the near or left-hand wheel of the cart, on the inside, a large spur-wheel is attached, with which suitable mechanism is combined and arranged for cutting the fence.

A knife or knives is or are arranged at proper angles, one for cutting one side and the other the other when two are employed.

A horse is attached in the ordinary way to the cart, which being propelled gives motion to the knife or knives, and thereby cuts one or both sides of the hedge at once if two knives are employed.

The thorn or other cuttings as they are cut are collected by the machine and left in heaps at the side of the fence.

The following is a description of one method of arranging the knife-bars so as to overcome the difficulty arising from any unevenness in the nature of the soil or other obstructions, but this may be varied as hereinafter described. At a suitable distance from the cart the knife or cutter bar is mounted, which however is not made fast but swings on the same or common centre with a large wheel which drives a pinion attached to the crank wheel for driving the knife or cutter. The axle carrying this pinion and crank wheel runs in a boss or bearing fixed on the top of the knife-bar. At the bottom of the knife-bar in this arrangement a small travelling wheel is arranged which guides it clear of the ground, the knife-bar not being fast but swinging on the same centre as the larger wheel before described, therefore, at whatever angle the small travelling wheel may bring the knife-bar by the action of the ground, the pinion at the top will gear exactly the same into its driving wheel, thereby getting over the difficulty arising from the unevenness of the ground. The other knife-bar is geared in a similar manner to the one previously described, but the angle is reversed so as to be in position to cut the other side of the fence.

Each knife has separate driving gear, but derived from the same spur-wheel on the travelling wheel of the cart, one working a short distance before the other.

As it is necessary that the machine should be able to cut both large hedges and small ones with one machine, this difficulty is overcome in the following manner:—The knife-bars may be arranged to work at angles across each other, the centre on which they swing being lengthened and made so that the knives can be moved across each other more or less, which will allow of a great variation in the size or height of the fence to be cut.

The main bearing from the side of the cart which supports the apparatus is arranged to slide a short distance, carrying the whole machine with it, so that by the assistance of a man behind the machine the fence can be cut as near straight as possible.

The knives or cutters are made so as to cut either with or without fingers.

Figure 1 on the annexed drawing is a side elevation; figure 2, an end elevation; and figure 3 is a plan of a machine thus arranged for cutting thorn and other hedges.

A large spur-wheel, *a*, is keyed on to the centre boss a^1 of the near or left-hand travelling wheel; this spur-wheel gears into a small pinion, *b*, attached to a spindle b^1, which extends into the body of the cart and receives a spur-wheel, *c*, which communicates motion to a pinion, *d*, on the traversing spindle *e*, which slides through the boss of the wheel *d*, a fixed key being inserted at the end of the spindle *e* by which means it is driven. At the opposite end of this spindle a bevel wheel, *f*, gears into a pinion, *g*; this bevel gearing drives a short spindle, g^1, to the other end of which is applied a crank-wheel, *h*, which through the connecting rod h^1 imparts a rapid reciprocating motion to the knife *i*; this knife works on a knife-bar, *j*, to which are attached knife segments similar to ordinary reaper blades but of larger size. This cutting apparatus radiates on the same centre as the bevel pinion *g* and the crank-wheel *h*.

In place of employing the arrangement of loose knife-bar with small travelling-wheel attached at lower extremity, as previously described, for adapting the action of the knife to the unevenness of the ground, it is found more advantageous to fix the cutting-bar at any desired angle by providing a regulating sector *k*, connected to the knife-bar *j*, and arranged in proximity to the fixing h^2 carrying the spindle g^1.

From the bracket *l* is attached a flat bar extending to the double-friction roller *m*, and supported at this point by the stay *n*; on the top of the bracket *l* another friction-roller, *o*, is attached; between the double rollers *m* and underneath the roller *o* a strong traversing bar (at the end of this bar is attached the knife gear previously described), *p*, is moved to and fro by the steering handle *q*, which works on a centre or fulcrum, *v*, and between guide runners, *s*, which runners are fixed upon the traversing bar *p*.

A man walking behind the machine, by means of the steering lever or handle *q* maintains the cutting-bar in its required working position.

Another man rides in the cart on the seat *t* and drives the horse or horses, and by observing the indicator *u*, which is a continuation of the steering lever *q* beyond the fulcrum *v*, he learns the position of the cutting-knife and drives accordingly.

To enable the cutting apparatus to be stopped quickly the spur-wheel *c* is arranged to revolve loose on the spindle b^1, and is driven by means of the clutch b^2, which can be instantly withdrawn from contact with the wheel *c* by means of the lever *x*; or in lieu of the clutch arrangement above described, a spring ratchet or other suitable appliance may be used for the purpose.

The cuttings as they fall are collected upon a series of three or more spring steel bars attached to the bottom of the knife or cutter-bar (not shown in the drawings), and as the cuttings accumulate thereon their weight causes them to be deposited from time to time upon the ground as the machine progresses.

In erecting the spindles and gearing in the body of the cart it is advantageous to use two main brackets, which facilitates the removal of the machine from the cart, which can then be used for ordinary farm purposes.

These drawings show a single-acting machine with one knife, which is found in practice to answer most purposes, but duplicate knife gear can be attached and power imparted to the same by introducing a pinion which will be the same size as and gear into the pinion *d*; from this pinion a duplicate traversing spindle, *e*, may be arranged as before described. Another

Improvements in Machinery for cutting Thorn and other Hedges.

Another arrangement of apparatus, according to the invention, in which the cutting or clipping of the side of a hedge is effected by a knife-bar and reciprocating knife, suspended from the end of an extensible arm projecting outwards from one side of a cart or vehicle, is as follows:—

The extensible arm is made tubular, and the spindle which is to convey motion to the knife is carried through the interior of the arm; the spindle is thereby enclosed and protected from clippings becoming twined around it.

Improved means are also provided for holding the cutter-bar at any desired angle, and also means for raising or lowering the bar to bring it to any desired height, and other improvements to increase the efficiency of the machine.

The machine is constructed as follows:—In place of mounting the apparatus in a cart, as before described, it is carried by a pair of wheels both mounted on an axle, and driving the axle by ratchet apparatus on their forward movement, but being free to turn around the axle when moving in the opposite direction, thus both carrying wheels are available for driving the cutter. On the axle is fixed a spur-wheel at the opposite side of the machine to that at which the cutter is carried. From the spur-wheel motion is transmitted to a horizontal axis above the axle, and from this axis motion is transmitted by bevel wheels to an upright shaft, which is supported by a standard at that side of the machine from which the cutter is to be carried. At the top of the standard is mounted a short horizontal axis at right angles to the axle, and the inner end of the tubular telescopic arm before mentioned swings around this axis. The upright shaft at its upper end gives motion to a bevel wheel on the short horizontal shaft, and this bevel wheel gears with and drives a bevel wheel on the end of the shaft which is to convey motion to the cutter, and which passes through the interior of the arm as before mentioned. Thus the arm can be turned on this pivot at its end without interfering with the driving of the shaft which passes through it.

To support the arm a stay passes from the middle of the outer tube of the arm to a ring which embraces the nave of the wheel on that side of the machine.

The stay can be lengthened or shortened by a screw and nut worked by a ratchet or otherwise, and thus the arm can be raised or lowered as desired, and maintained in any position.

The outer tube of the telescopic arm has at its end friction rollers for the inner tube to rest upon. The inner tube has also studs projecting from it which enter longitudinal slots in the outer tube, and these studs carry friction rollers. This allows of the arm being extended or contracted, and the cutter then moved towards or away from the wheels with very great ease.

This shaft which passes through the telescopic arm is telescopic, and at its outer end has upon it a bevel pinion which drives a short horizontal crank shaft at right angles to the arm. The cutter bar is suspended on this axis, and the crank gives a to and fro motion to the knife.

The upper end of cutter-bar has secured to it a worm wheel concentric with the crank axis, and a worm gears with this worm wheel. The spindle of the worm is telescopic and extends along the telescopic arm to the standard, and there carries a hand-wheel by which it can be turned. There is also a catch by which the hand-wheel can be locked and retained. The cutter-bar can thus be moved and held at any angle, or can even be turned over so as to lie above the telescopic arm when out of use.

In rear of the axle of the machine is a seat for a man to attend to the working of the machine; he can, by the hand-wheel just mentioned, set the cutter-bar to any desired angle, and also by a lever handle, move the cutter towards or away from the machine. Another seat is also provided for the man who drives the horses.

To protect the wheel which is on that side of the machine from which the cutter-arm extends, a shield is fixed to the outer side of the wheel, which thus prevents clippings entering between and being caught up by the spokes of the wheel.

After a hedge has been clipped on both sides it may be topped by setting the cutter to a horizontal position to cut along the top, and, to be able to cut to a uniform height, the upper end of the stay which supports the telescopic arm by which the cutter is carried is made extensible, and can be lengthened or shortened by a man raising or lowering a long lever handle.

In place of the telescopic arm being jointed to the standard so as to allow of the cutter being raised or lowered, the standard might be telescopic or made capable of sliding upwards to allow of the arm being readily brought to any desired height. The cutter also might be made so that a lengthening piece could be attached to its lower end whenever it was not long enough to reach to the bottom of a hedge.

In place of topping a hedge by the same cutter as that used for clipping its sides, a separate cutter may be used for the purpose. Either a short reciprocating knife or a circular revolving knife having curved blades, or two such circular knives revolving in opposite directions may be used, and these knives may have motion conveyed to them from the crank-shaft which drives the main knife. These cutters may be arranged to act at the same time as the main knife.

In place of the telescopic arm which carries the cutter being at one side of the machine it may be placed in the centre, so that the arm may be turned over with the cutter, and the cutter be so brought to act at either side of the machine at pleasure.

To effect the turning over of the arm, a worm and worm wheel or other mechanism may be used.

To ensure that the shoots at the top of a hedge shall be brought into a position to be caught by the knife, a divider is placed at the outer end of the telescopic arm. The divider moves along the top of the hedge and presses the shoots into the path of the cutter.

For drawing the machine in work double shafts are used, one shaft being jointed so that it may be folded up, which makes the machine more compact when only one horse is used to remove it from place to place.

The eye of the knife may be made separate from the knife-bar; it also forms a guide to keep the knife in its proper position.

The cutters may move from the right edge of one knife across an intermediate knife to the left edge of the next knife, and *vice versa*.

Figure 4 shows a back elevation partly in section; figure 5, a side elevation, and figure 6, a plan of a machine arranged in accordance with the foregoing description.

Improvements in Machinery for cutting Thorn and other Hedges.

AA are a pair of wheels mounted on an axle, B, and both turning the axle by ratchet apparatus on their forward movement in a manner well understood; C is a pole secured to the centre of the frame, and having secured to each side of it a shaft, D. One of the shafts is made so that it can be turned up so as to be out of the way when only one horse is harnessed to the machine to draw it from place to place. Fast on the axle is an internal toothed wheel, E, into which gears a pinion carried by an axis, F; the pinion can be slid endwise so as to be either fast or loose with its axis by means of a clutch lever, G. On the opposite end of the axis F is a bevel-toothed wheel, H, which drives a pinion at the lower end of a vertical axis, I; this axis is mounted in bearings in a vertical standard, K, carried by the axle, and stayed at the top by stay rods, K^1. The axis I has on it, at its upper end, a bevel pinion driving a bevel wheel on a short horizontal axis, L, mounted at the top of the standard K. On this axis swings the hollow telescopic arm M, within which is the extensible spindle which is to carry motion to the knife; this spindle is driven by a bevel pinion upon it gearing into the bevel wheel on the short horizontal axis L; N is the cutter-bar swinging on a short horizontal axis, O, at the outer end of the arm M.

On the arm and concentric with the axis is a worm-wheel, P, into which gears a worm, P^1, on an extensible spindle, P^2; this spindle is carried back alongside of the arm, and can be turned by a wheel or crank handle, P^3, at its end.

Any suitable form of catch may be used to prevent the spindle P^2 from turning whenever it is desired to lock and hold the cutter in any position into which it may have been brought. The cutter-bar can thus be set to incline to any desired angle, either towards or away from the machine, or can be held out horizontally for cutting along the top of a hedge, or can be turned back over the top of the arm so as to be out of the way when travelling.

The cutter-knife is driven to and fro by a crank pin carried by a disc wheel, Q, as shown, and it is caused to have a double throw, that is to travel from one knife, X, figure 17, to another knife, X, across an intermediate knife, thus making four complete cuts for every revolution of the crank. R is an extensible stay for supporting the telescopic arm M; it passes from the outer tube of this arm to a ring on the end of the axle B. S is a lever by which the stay can be lengthened or shortened, and the cutter thus raised or lowered. The manner in which the lever acts is clearly shown at figure 5. The arm can also be raised or lowered by turning a nut at the lower extremity of the outer tube or sleeve of the stay by a ratchet arrangement, S^1, and causing it to screw upwards or downwards on the screw which is jointed to the ring on the axle; or the nut may be formed as a bevel wheel as shown at figure 7, and be turned by a pinion mounted on a stud which projects from the outer tube or sleeve of the stay; the pinion itself has secured to it a crank handle by which it can be turned.

The lengthening or shortening of the arm M is effected by a lever, T, as is best seen in the plan view, figure 6. UU are friction rollers at the outer end of the outer tube of the arm M for the inner tube to rest on; and VV are other friction rollers on the end of the inner tube to run in slots in the sides of the outer tube, thus but little power has to be exerted to lengthen or shorten the arm.

The lever T can be set fast in any desired position by dropping a pin through it into one or other of a number of holes in a plate, T^1. W is a seat for the man who has to attend to the working of the cutting apparatus, and X, a seat for the driver. Z is a disc of metal secured to the outer side of the wheel next to the cutter to form a shield, and prevent clippings from becoming entangled in and carried round with the wheel; and Z^1 is a divider secured to the end of the arm M; it serves to press the top shoots into the path of the cutter.

It will be seen that by the arrangement of machinery above described, not only can the arm which carries the cutter-bar be lengthened or shortened as in the machine shown in figures 1, 2, and 3, but the cutter-bar can also be raised or lowered; the angle at which the cutter-bar is set can also from time to time be varied without stopping the working of the machine.

Another arrangement by which the cutter-bar can be raised or lowered without stopping the working of the machine is shown at figure 8. In this arrangement the tubular telescopic arm M stands out from a slide which can slide up or down on a standard on the main frame. The vertical axis I, which is driven as hereinbefore described, is made extensible, and the pinion on its upper end gives motion directly to the pinion on the extensible spindle which is carried through the telescopic arm M. The slide can be raised or lowered by a screw, W, descending from it, on which is a bevel wheel, W^1, which screws on it as a nut; the wheel has gearing into it a pinion on a crank axis, X, so that by the crank on the axis the slide can be raised or lowered.

Figure 9 is a back elevation, and figure 10 a side elevation in section of a machine in which the telescopic arm M is jointed to a standard which stands up from the centre of the axle, instead of from one of its ends as in figures 4, 5, and 6, in order that the arm may be turned over and the cutter caused to work on either side of the machine as desired.

This arrangement would save time supposing only one hedge in a field had to be cut, as, when one side of the hedge had been cut the cutters might be turned over to cut on the other side as the machine was drawn back, instead of returning with the machine out of work.

For turning over the telescopic arm, the arm is shown to have upon it, concentric with the axis on which the arm turns, a worm wheel into which gears a worm, Y, which can be turned by a crank handle. When the arm has been turned over to one or other side by the worm, and the extensible stay has been secured to it, the worm can be dipped out of gear with the worm wheel, so as to leave the arm free to be raised or lowered when the machine is at work.

At figure 11 is shown how a short horizontal reciprocating knife can be used for clipping the top of a hedge at the same time that the side is being cut; *a* is the horizontal cutter-bar secured to a rod, *b*, which can rise and fall through a socket at the end of the arm M but cannot turn in it.

Any suitable means may be provided for enabling the man in charge of the machine to raise or lower the rod *b*.

In the arrangement shown a chain is secured to the rod, and after being passed over a pulley is led backwards along the arm.

The reciprocating knife of the cutter is driven by a crank on a vertical spindle, which is driven by and

and can slide up or down through a bevel wheel C; the bevel wheel is driven by gear from a toothed wheel at the back of the crank-wheel Q from which the reciprocating knife of the main cutter is driven.

Instead of using a reciprocating knife for cutting the top of the hedge, a revolving knife working with fixed fingers may be used, as shown at figure 12, or two knives revolving in opposite directions as shown at figure 13.

At figures 14, 15, and 16 is shown how a lengthening piece can be secured to the lower extremity of the cutter-bar N; figure 14 shows the lengthening piece; figure 15 shows the lengthening apparatus put together for work; figure 16 shows a back elevation of the same. On the lower or fixed bar two plates are secured, one on the under and the other on the top side of the bar. The loose part or piece may have a projecting tongue fitting into a slot to prevent its moving sidewise. The whole is secured by a stud passing through the two plates and the bar; the top part of this stud forms a slide to keep down the moving knife, which is held by the two gibs being held down in its working position by the slide before mentioned.

Having thus described the nature of the invention and the manner of performing the same, we would have it understood that we claim as the improvements in machinery for cutting and clipping thorn and other hedges—

First—The arrangement of self-acting machinery for cutting or clipping thorn and other hedges, substantially as herein described.

Second—The arrangement, construction, and application of self-acting machinery or apparatus for cutting or clipping thorn and other hedges, arranged with an adjustable knife or knives mounted and acting substantially in the manner and for the purpose hereinbefore described, and represented in the drawings annexed.

Third—Carrying the cutter-bar in such a manner that it can not only be set and held at any required angle, but can also be raised or lowered.

Fourth—Jointing the arm M by a horizontal joint to a standard, or carrying it by a slide which moves up or down on a standard as herein described.

Fifth—The employment in combination with the cutter used for cutting the side of a hedge of another reciprocating or revolving cutter for cutting along the top of the hedge.

Sixth—Forming the extensible arm M from which the cutter is swung tubular, so that the spindle by which motion is conveyed to the cutter may pass through the arm and be protected by it.

Seventh—The means, substantially as hereinbefore described, of bringing the cutter-bar to any desired angle and retaining it at that angle.

Eighth—Carrying a divider at the end of the arm M to press the top shoots of a hedge into the path of the cutter by which the side of a hedge is being cut.

In witness whereof, we, the said James Hornsby and William Hornsby, have hereunto set our hands, this tenth day of December, 1878.

JAMES HORNSBY.
WILLIAM HORNSBY.

By their Agent—
EDWD. WATERS.

This is the specification referred to in the annexed Letters of Registration granted to James Hornsby and William Hornsby, this fourth day of August, A.D. 1879.

ALFRED STEPHEN.

REPORT.

Sir, Sydney, 11 July, 1879.

In reply to your blank cover communication of the 7th instant, No. 5,075, transmitting James Hornsby and William Hornsby's application for Letters of Registration for "Improvements in Machinery for cutting or clipping Thorn or other Hedges," we do ourselves the honor to report that we see no objection to the issue of Letters of Registration, in terms of the Messrs. Hornsby's Petition, specification, drawings, and claim.

We have, &c.,
GOTHER K. MANN.
ROBERT GEO. MASSIE.

The Principal Under Secretary.

[Drawings—one sheet.]

J. and W. Hornsby's Patents.

FIG. 1.

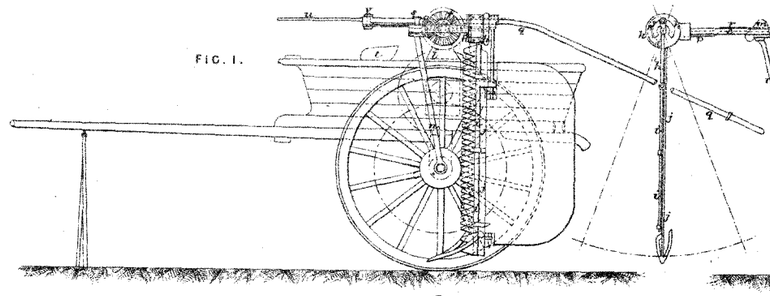

FIG. 2.

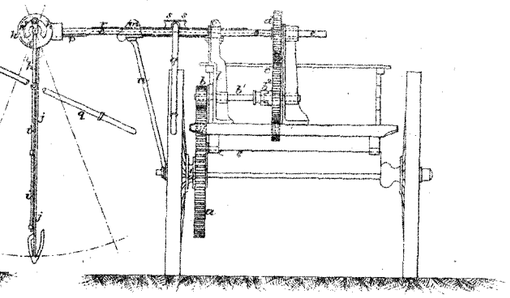

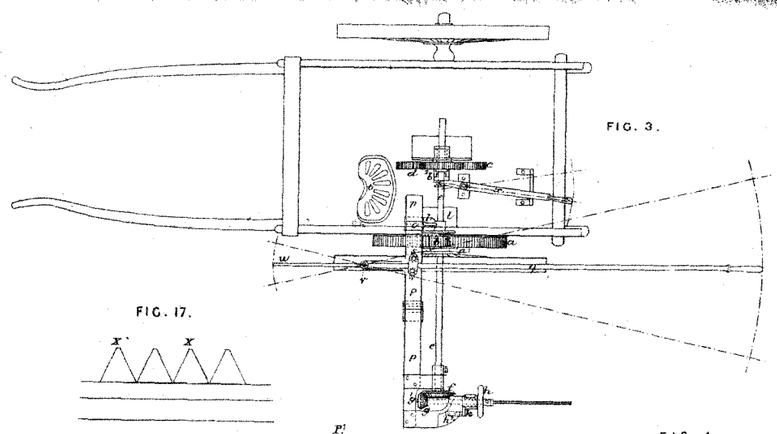

FIG. 3.

FIG. 9.

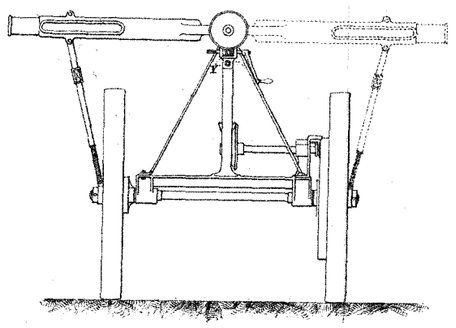

FIG. 10.

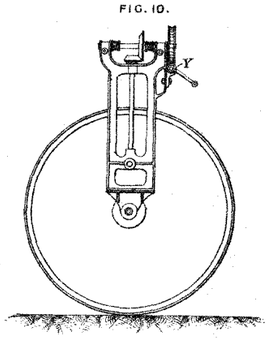

FIG. 17.

FIG. 4.

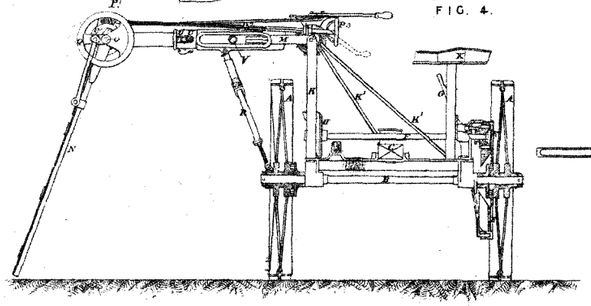

FIG. 5.

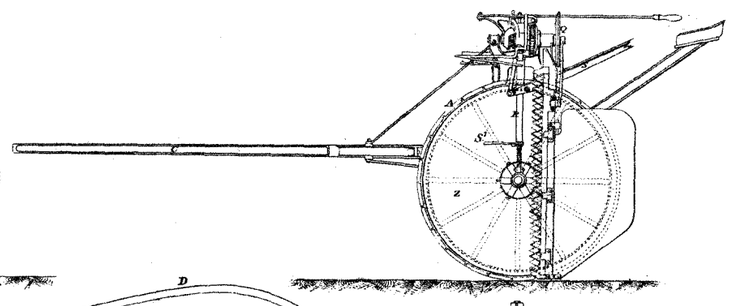

FIG. 8.

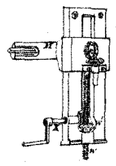

FIG. 11.

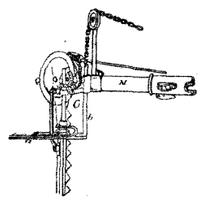

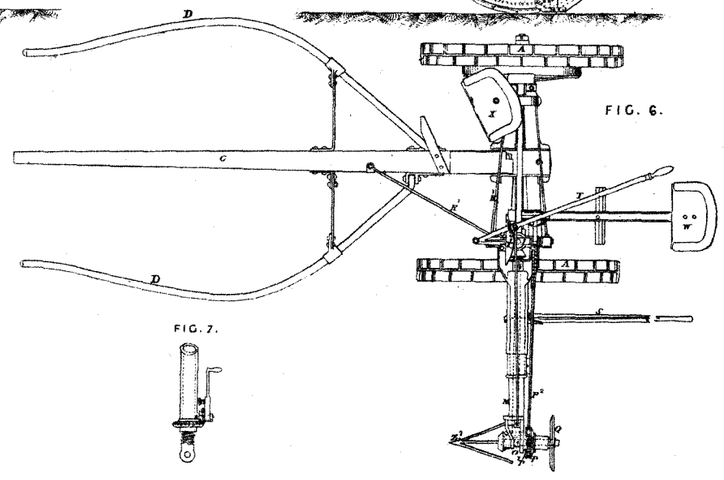

FIG. 6.

FIG. 14.

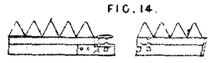

FIG. 12.



FIG. 15.

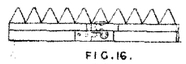

FIG. 13.

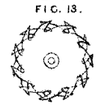

FIG. 16.



FIG. 7.

This is the Sheet of Drawings referred to in the annexed Letters of Registration granted to James Hornsby and William Hornsby the fourth day of August - A.D. 1870 -

Alfred Stephen

(Sig. 198-)

PHOTO-LITHOGRAPHED AT THE GOVT. PRINTING OFFICE, SYDNEY, NEW SOUTH WALES.

A.D. 1879, *4th August.* No. 754.

IMPROVEMENTS IN DRIVE-CHAINS,

LETTERS OF REGISTRATION to The Ewart Manufacturing Company, for Improvements in Drive-chains.

[Registered on the 6th day of August, 1879, in pursuance of the Act 16 Vic. No. 24.]

BY HIS EXCELLENCY SIR ALFRED STEPHEN, Knight Commander of the Most Distinguished Order of Saint Michael and Saint George, and a Companion of the Most Honorable Order of the Bath, Lieutenant-Governor of New South Wales.

TO ALL TO WHOM THESE PRESENTS SHALL COME, greeting:

WHEREAS THE EWART MANUFACTURING COMPANY, of Chicago, in the County of Cook and State of Illinois, United States of America, hath by its Petition humbly represented to me that it is the Assignee of William Dana Ewart, who is the author or designer of a certain invention or improvement in manufactures, that is to say, of an invention entitled "Improvements in Drive-chains," which is more particularly described in the specification and the sheet of drawings which are hereunto annexed; and that the said petitioner hath deposited with the Honorable the Treasurer of the said Colony of New South Wales the sum of Twenty Pounds sterling, for defraying the expense of granting these Letters of Registration, as required by the Act of Council, sixteenth Victoria, number twenty-four; and hath humbly prayed that I would be pleased to grant Letters of Registration, whereby the exclusive enjoyment and advantage of the said invention or improvement might be secured to it for a period of fourteen years: And I, being willing to give encouragement to all inventions and improvements in the arts or manufactures which may be for the public good, and having received a report favourable to the prayer of the said Petition, from competent persons appointed by me to examine and consider the matters stated therein and to report thereon for my information, am pleased, with the advice of the Executive Council, and in exercise of the power and authority given to me by the said Act of Council, to grant, and do by these Letters of Registration grant unto the said Ewart Manufacturing Company and its assigns the exclusive enjoyment and advantage of the said invention or improvement, for and during the term of fourteen years from the date hereof; to have, hold, and exercise unto the said Ewart Manufacturing Company and its assigns the exclusive enjoyment and advantage thereof, for and during and unto the full end and term of fourteen years from the date of these presents next and immediately ensuing, and fully to be complete and ended: Provided always, that if the said Ewart Manufacturing Company shall not, within three days after the granting of these Letters of Registration, register the same in the proper office in the Supreme Court, at Sydney, in the said Colony of New South Wales, then these Letters of Registration, and all advantages whatsoever hereby granted, shall cease and become void.

In witness whereof, I have hereunto set my sign manual, and have caused the present Letters of Registration to be sealed with the seal of the said Colony of New South Wales, at Government House, Sydney, in New South Wales, this fourth day of August, in the year of our Lord one thousand eight hundred and seventy-nine.

[L.S.] ALFRED STEPHEN,
Lieutenant-Governor,
Administering the Government of the said Colony.

A.D. 1879. No. 754.

Improvements in Drive-chains.

SPECIFICATION of WILLIAM DANA EWART, of Belle Plaine, in the County of Benton and State of Iowa, United States of America, now residing at Denver, in the County of Arapahoe, State of Colorado, United States of America, manufacturer, for an invention entitled "Improvement in Drive-chains"; and I do hereby declare that the following is a full, clear, and exact description of the same, reference being had to the annexed drawings, which make a part of the specification, and to the letters and figures of reference marked thereon.

FIGURE 1 of the drawing represents a side view of my drive-chain; figure 2 is a sectional view of the same; figure 3 is a plan or top view of the same; figure 4 is a detailed view, showing a method of detaching the links of the chain; figure 5 is a plan or top view, showing the hook or coupling device detached from the end bar and made an independent connecting section; and figure 6 shows a sectional view of the same.

This invention relates to what are called rag-chains, which are used in combination with sprocket-wheels on harvesting and other machinery.

My invention consists in a drive-chain, which is made up of detachable links, for the purpose of readily substituting new links for broken ones, or changing the length of the chain, while at the same time the links are not liable to casual detachment, as hereinafter more fully described.

The following is a description of my invention:—

The links, A, are preferably of a rectangular form, longer than they are broad, their side bars, *a a'*, being round, or nearly so, and their end bars, *b b'*, being constructed as shown in the annexed drawings. The end bar *b* is made with a broad hook, *c*, which is about three-quarters of a circle, and which is adapted for receiving in it the end bar *b'*.

It is obvious that the links need not necessarily be made with the hook or coupling device attached to or made part of the end bar, but the links may be made plain with the depression as shown at *e*, and the hook or coupling device as an independent coupler or connecting section (as shown in figures 5 and 6).

For the purpose of connecting the links to make a chain of them, and disconnecting them readily, one of the side bars of each link is made sufficiently small near the end bar *b* to pass through the opening of the hook *c*, so that, when two links are held at an angle (as shown in figures 2 and 4), they can be hooked together or unhooked. When the links are coupled the hooks are received between the side bars of the links, and when the links are straightened (as shown in figures 1, 3, and 5), they will not uncouple. The side bar *a'* is made sufficiently small at *e* to pass through the opening of the hook *c*.

Among many advantages attending my invention I will mention the following:—The links are taken apart and put together without bending, riveting, or altering any part of them, and the fastening connecting them together is such as to admit of square or open links being fastened closely together, so that the sprockets on the driving pulleys may be arranged near each other, thereby dividing the application of power and diminishing the strain. They allow the chains to be readily shortened and lengthened, or repaired by inserting new links, without bending any part of the fastenings, and the connections make the broadest possible bearings on each other, thereby preventing lateral motion of the chain when run slack, and increasing the strength.

What I claim as new, and desire to secure by Letters Patent, is—

1. The combination in a drive-chain of the coupling hooks *c* and side bars sufficiently small close to the end bars to pass through the opening of the hook *c*, as shown and described.
2. The combination in the open link of a drive-chain of the end bar *b*, provided with a coupling-hook and the end bar *b'* adapted to be coupled to the hook of a corresponding link to form a chain, substantially as shown.
3. The combination in a drive-chain of the separate open hook or coupler *c* and the links A, substantially as shown.

In witness whereof, I, the said William Dana Ewart, have hereto set my hand and seal, this twenty-fifth day of April, A.D. 1879.

WILLIAM DANA EWART.

Witness—
ALEX. T. REID.
CHAS. G. BEECHINGHAM.

State of Colorado, County of Boulder.

Subscribed and sworn to before me, this twenty-fifth day of April, A.D. 1879.

SYLVESTER S. DOWNER,
Notary Public,
Boulder County, Colorado.

(Notarial seal.)

This is the specification referred to in the annexed Letters of Registration granted to the Ewart Manufacturing Company, this fourth day of August, A.D. 1879.

ALFRED STEPHEN.

REPORT.

Improvements in Drive-chains.

REPORT.

Sir,

Sydney, 11 July, 1879.

We do ourselves the honor to report, in reply to your blank cover communication of the 7th instant, No. 5,110, transmitting the Petition of the Ewart Manufacturing Company, Chicago, United States of America, for Letters of Registration for an "Improvement in Drive-chains," that we see no objection to the issue of Letters of Registration, in terms of their Petition, specification, drawings, and claim.

We have, &c.,

GOTHER K. MANN.
ROBERT GEO. MASSIE.

The Principal Under Secretary.

[Drawings—one sheet.]

No. 755.

[Assignment of No. 315. See page 61 of Return of 1 April, 1874.]

No. 756.

[Assignment of process for transferring negative photographs to zinc plates.]

No. 757.

[Assignment of No. 558. See page 167 of Return of 4 June, 1879.]

No. 758.

[Assignment of half interest of No. 777.]

Fig 1

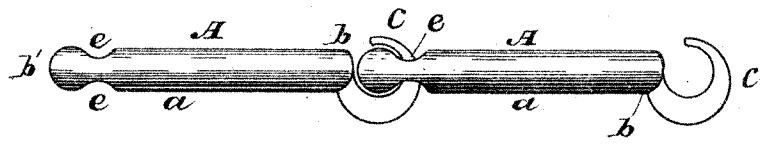

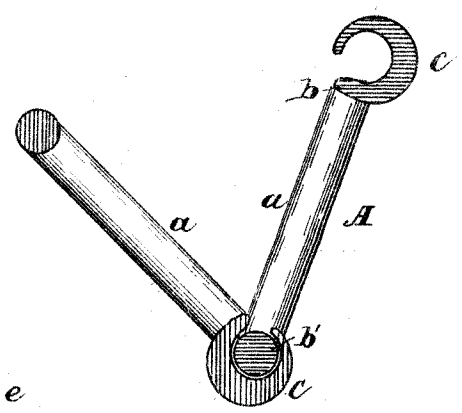

Fig 5

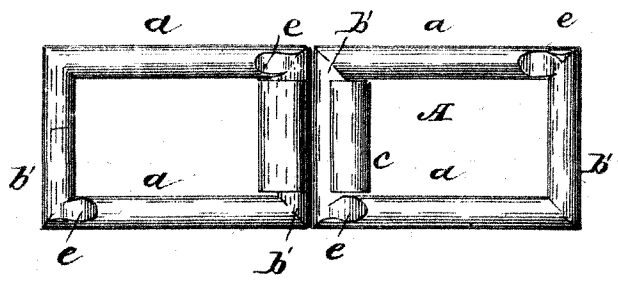

Fig 2

Fig 6

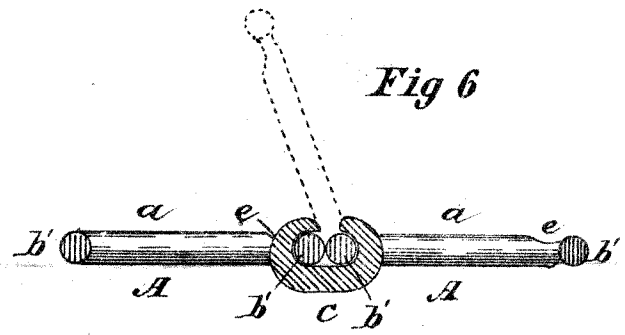

Fig 3

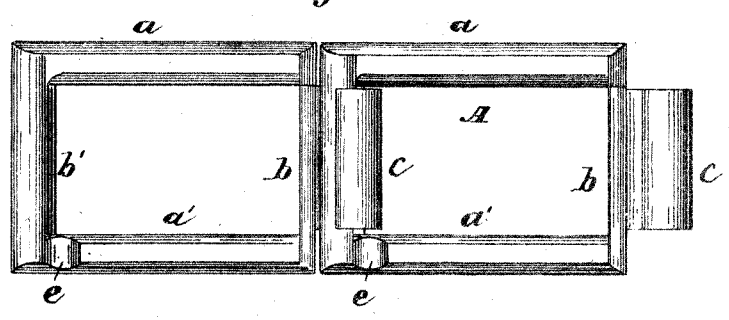

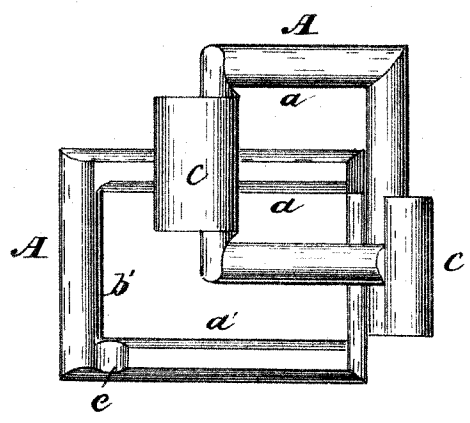

Fig 4

This is the Sheet of Drawings referred to in the annexed Specification of Registration granted to the Exors of Augustus Frederick Stephens for 2 years from 1st August 1879 -

Registered Stephens

PHOTO-LITHOGRAPHED AT THE GOVT. PRINTING OFFICE,
SYDNEY, NEW SOUTH WALES.

A.D. 1879, 12*th September*. No. 759.

PRESERVATION OF MEAT.

LETTERS OF REGISTRATION to Edward Scott Naylor, for a new and original Process for the Preservation of Meat.

[Registered on the 13th day of September, 1879, in pursuance of the Act 16 Vic. No. 24.]

BY His Excellency the Right Honorable Sir Augustus William Frederick Spencer Loftus (commonly called Lord Augustus Loftus), Knight Grand Cross of the Most Honorable Order of the Bath, a Member of Her Majesty's Most Honorable Privy Council, Governor and Commander-in-Chief of the Colony of New South Wales and its Dependencies.

TO ALL TO WHOM THESE PRESENTS SHALL COME, greeting:

WHEREAS Edward Scott Naylor, of Walgett, in the Colony of New South Wales, superintendent of station, hath by his Petition humbly represented to me that he is the author or designer of a certain invention or improvement in manufactures, that is to say, of an invention of "A new and original process for the Preservation of Meat in a partially cooked or cooked state, by means of a preparation of stearine or fat, from which the oleine has been extracted, the meat so cooked or partially cooked being packed in casks or cases, and entirely surrounded by this preparation being poured over it in a liquid state, so as entirely to exclude the air," which is more particularly described in the specification which is hereunto annexed; and that he, the said Petitioner, hath deposited with the Honorable the Treasurer of the said Colony of New South Wales the sum of Twenty Pounds sterling, for defraying the expense of granting these Letters of Registration, as required by the Act of Council, sixteenth Victoria, number twenty-four; and hath humbly prayed that I would be pleased to grant Letters of Registration, whereby the exclusive enjoyment and advantage of the said invention or improvement might be secured to him for a period of fourteen years: And I, being willing to give encouragement to all inventions and improvements in the arts or manufactures which may be for the public good, and having received a report favourable to the prayer of the said Petition, from competent persons appointed by me to examine and consider the matters stated therein and to report thereon for my information, am pleased, with the advice of the Executive Council, and in exercise of the power and authority given to me by the said Act of Council, to grant, and do by these Letters of Registration grant unto the said Edward Scott Naylor, his executors, administrators, and assigns, the exclusive enjoyment and advantage of the said invention or improvement, for and during the term of fourteen years from the date hereof; to have, hold, and exercise unto the said Edward Scott Naylor, his executors, administrators, and assigns, the exclusive enjoyment and advantage thereof, for and during and unto the full end and term of fourteen years from the date of these presents next and immediately ensuing, and fully to be complete and ended: Provided always, that if the said Edward Scott Naylor shall not, within three days after the granting of these Letters of Registration, register the same in the proper office in the Supreme Court at Sydney, in the said Colony of New South Wales, then these Letters of Registration, and all advantages whatsoever hereby granted, shall cease and become void.

In witness whereof, I have hereunto set my sign manual, and have caused the present Letters of Registration to be sealed with the seal of the said Colony of New South Wales, at Government House, Sydney, in New South Wales, this twelfth day of September, in the year of our Lord one thousand eight hundred and seventy-nine.

[L.S.] AUGUSTUS LOFTUS.

Preservation of Meat.

SPECIFICATION.

TO ALL TO WHOM THESE PRESENTS SHALL COME, I, EDWARD SCOTT NAYLOR, of Walgett, in the Colony of New South Wales, Superintendent of Station, send greeting:

WHEREAS I am desirous of securing unto me Her Majesty's special license that I, and my executors, administrators, and assigns, or such others as I or they should or may at any time agree with and no others, should and lawfully might from time to time, and at all times during the term of fourteen years to be computed from the day on which this instrument is left at the office of the Colonial Secretary at Sydney, in the Colony of New South Wales, make, use, exercise, and vend within the said Colony, an invention for the preservation of meat; and, in order to obtain the said Letters of Registration, I hereby give a fuller description of the manner and nature of the said invention, which is as follows:—

The meat, which is first partially roasted or cooked, is packed in cases or casks, a space being left between the sides of the cases or casks, and the meat, stearine, or fat from which the oleine has been extracted, is then melted and poured on in a liquid state until the cases or casks are full, which on solidifying excludes the air and prevents putrefaction setting in.

The cooking of the meat coagulates the albumen, ejects the oxygen, and closes the pores of the meat, which prevents the natural juices from escaping.

CLAIMS.

1. I claim the method for preserving meat in solid joints or quarters without the use of antiseptic agencies, as salt, vinegar, &c.
2. To be the first to appropriate stearine or fat, from which the oleine has been extracted for the use of excluding air.
3. That the stearine used in the process will sell at an advanced rate in Europe. Fat of which the chief component part is stearine.
4. That by extracting the oleine from the fat, turning rancid or melting at a high temperature is allayed, as stearine or fat from which the oleine has been extracted preserves its solidity at a temperature of 138° F.

In witness whereof, I, the said Edward Scott Naylor, have to this my specification set my hand and seal, this seventeenth day of July, in the year of our Lord one thousand eight hundred and seventy-nine.

EDWARD SCOTT NAYLOR.

Signed and sealed in the presence of—

GEORGE MURRAY DUNN,
Of 152, King-street, Sydney, Solicitor.

This is the specification referred to in the annexed Letters of Registration granted to Edward Scott Naylor, this twelfth day of September, A.D. 1879.

AUGUSTUS LOFTUS.

REPORT.

Sydney, 25 July, 1879.

Sir,

The application of Mr. Edward Scott Naylor for Letters of Registration for a process for the "Preservation of Meat" having been referred to us, we have examined the specification accompanying the same, and have now the honor to report that we see no objection to the issue of Letters of Registration as prayed for.

We have, &c.,
J. SMITH.
CHAS. WATT.

The Principal Under Secretary.

A.D. 1879, 12*th September*. No. 760.

IMPROVEMENTS IN STOCKS AND DIES FOR SCREW-THREADING PIPES, &c.

LETTERS OF REGISTRATION to Harry Oscar Choles, for Improvements in Stocks and Dies for Screw-threading Pipes and other articles.

[Registered on the 13th day of September, 1879, in pursuance of the Act 16 Vic. No. 24.]

BY HIS EXCELLENCY THE RIGHT HONORABLE SIR AUGUSTUS WILLIAM FREDERICK SPENCER LOFTUS (commonly called LORD AUGUSTUS LOFTUS), Knight Grand Cross of the Most Honorable Order of the Bath, a Member of Her Majesty's Most Honorable Privy Council, Governor and Commander-in-Chief of the Colony of New South Wales and its Dependencies.

TO ALL TO WHOM THESE PRESENTS SHALL COME, greeting:

WHEREAS HARRY OSCAR CHOLES, of Upper Clapton, in the county of Middlesex, England, hath by his Petition humbly represented to me that he is the author or designer of a certain invention or improvement in manufactures, that is to say, of an invention entitled "Improvements in Stocks and Dies for Screw-threading Pipes and other articles," which is more particularly described in the specification and the sheet of drawings which are hereunto annexed; and that he, the said Petitioner, hath deposited with the Honorable the Treasurer of the said Colony of New South Wales the sum of Twenty Pounds sterling, for defraying the expense of granting these Letters of Registration, as required by the Act of Council, sixteenth Victoria, number twenty-four; and hath humbly prayed that I would be pleased to grant Letters of Registration, whereby the exclusive enjoyment and advantage of the said invention or improvement might be secured to him for a period of fourteen years: And I, being willing to give encouragement to all inventions and improvements in the arts or manufactures which may be for the public good, and having received a report favourable to the prayer of the said Petition, from competent persons appointed by me to examine and consider the matters stated therein, and to report thereon for my information, am pleased, with the advice of the Executive Council, and in exercise of the power and authority given to me by the said Act of Council, to grant, and do by these Letters of Registration grant unto the said Harry Oscar Choles, his executors, administrators, and assigns, the exclusive enjoyment and advantage of the said invention or improvement, for and during the term of fourteen years from the date hereof; to have, hold, and exercise unto the said Harry Oscar Choles, his executors, administrators, and assigns, the exclusive enjoyment and advantage thereof, for and during and unto the full end and term of fourteen years from the date of these presents next and immediately ensuing, and fully to be complete and ended: Provided always, that if the said Harry Oscar Choles shall not, within three days after the granting of these Letters of Registration, register the same in the proper office in the Supreme Court, at Sydney, in the said Colony of New South Wales, then these Letters of Registration, and all advantages whatsoever hereby granted, shall cease and become void.

In witness whereof, I have hereunto set my sign manual, and have caused the present Letters of Registration to be sealed with the seal of the said Colony of New South Wales, at Government House, Sydney, in New South Wales, this twelfth day of September, in the year of our Lord one thousand eight hundred and seventy-nine.

[L.S.] AUGUSTUS LOFTUS.

Improvements in Stocks and Dies for Screw-threading Pipes, &c.

SPECIFICATION of HARRY OSCAR CHOLES, of Upper Clapton, in the County of Middlesex, England, for an invention entitled "Improvements in Stocks and Dies for Screw-threading Pipes and other articles."

My invention relates to stocks and dies for screw-threading gas and other pipes, bolts or rods.

My invention has for its object, first, to prepare the pipe for the action of the screw-cutting die by removing the burr (which is thrown up on the end of the pipe in cutting it to length) and also the hard outer surface of the pipe—this being done in advance of the screw-cutting die, but at the same operation with the cutting of the screw-thread instead of at a previous operation by means of a file as usual; and, secondly, to feed the die along the pipe as it cuts the screw-thread, by means of a leading screw separate from the die, but combined with the die stock instead of relying on the self-feeding action of the die, thereby relieving the die of this part of its work, facilitating the screw-cutting operation, and ensuring the formation of a perfectly true screw-thread.

For the purposes of my invention the tubular guide through which the pipe passes before entering the die as usual is connected to the die stock in the usual manner, by its flanged end being received in a corresponding socket in the stock and keyed therein; and in order to accomplish the first object of my invention, I provide the said guide with a cutter, or ring of cutters, on the interior at the end next the die, whereby, on rotating the stock in the ordinary way of cutting the screw-thread, the burr and hard outer skin are removed from the pipe just before it enters the die, and at one and the same operation as the cutting of the screw-thread thereby. The ring of cutters being concentric with the die, the end of the tube is accurately guided by the former into the latter.

To accomplish the second object of my invention the said tubular guide near the end furthest from the said die is screw-threaded internally or externally (preferably the former), to screw in or on a corresponding screw-threaded tube or collar firmly clamped on the pipe. This screw is of exactly the same pitch as the screw-thread to be cut on the pipe by the die, and, as the guide screws upon it, it thus forms a feed screw or leading screw to feed the die along the pipe when in work.

DESCRIPTION OF DRAWINGS.

Figure 1 is an elevation of a die stock provided with the improvements of my invention; figure 2 is a top view thereof; and figure 3 is a central section of the same on line 11, figure 2, showing all the parts in position. Figure 4 is a top view of the stock, the die and its locking devices being removed therefrom, showing the ring of cutters on the guide. Figure 5 is a similar view of the stock alone, showing the socket in which the said guide is received. Lastly, figures 6, 7, and 8 are respectively a top end view elevation and bottom end view of the guide alone.

The same letters of reference indicate the same parts in all the figures.

A is the stock, and B the die locked in its recess therein by milled nuts C screwing on pins *c* fixed in the stock in recesses formed partly in the stock and partly in the die, in which the nuts are received all as usual. D is the tubular guide, provided with a flange *d* at one end, received in a correspondingly rebated socket in the stock A, and keyed therein by half-round notches d^1 in the flange *d*, embracing corresponding bosses *a* formed on the stock A, and projecting into the rebate of the socket. The die B and its nuts C hold the guide D securely in place. So far the guide is much the same as usual.

E is an interior ring of cutters, formed on the guide D at the end next the die B. Their form is clearly shown in figure 4, and they give passage to the pipe F to be screw-threaded after removing the burr and hard outer skin therefrom. The remainder of the guide D is enlarged internally, so as not to touch the pipe, and is screw-threaded internally to screw upon an externally threaded tubular portion *g* of a collar G, which fits loosely on the pipe F, and is firmly clamped thereto by means of a set screw H.

The pipe F being fixed in a vice or otherwise held as usual, it will be readily seen how, on rotating the stock, the guide D is caused to traverse the screw *g*, thereby feeding the cutters E and the die B along the tube, the action of the cutters preceding that of the die as above explained.

It will be obvious without further illustration that the guiding screw may be on the exterior of D and on the interior of *g*, if the latter be made large enough to receive the former within it.

Claims:—

1st. The combination with a hand-screwing stock and die of an internal ring of cutters placed beneath the die, so as to precede it in its action on the pipe, substantially as and for the purpose specified.

2nd. The combination with a screwing stock and die of a guide adapted to screw on or in a leading or feed screw fixed to the pipe, to be screw-threaded, substantially as and for the purpose specified.

3rd. The combination with a screwing stock and die of a tubular guide having an internal ring of cutters at its end next the die, and of a leading or feed screw formed partly on the other end of the said guide and partly on a collar fixed to the pipe to be screw-threaded, substantially as and for the purpose specified.

In witness whereof I, the said Harry Oscar Choles, have hereunto set my hand and seal, this third day of June, 1879.

H. O. CHOLES.

This is the specification referred to in the annexed Letters of Registration granted to Harry Oscar Choles, this twelfth day of September, A.D. 1879.

AUGUSTUS LOFTUS.

REPORT.

Improvements in Stocks and Dies for Screw-threading Pipes, &c.

REPORT.

Sir,

Sydney, 28 July, 1879.

We do ourselves the honor to state, in reply to your blank cover communication of the 21st instant, No. 5,509, transmitting Henry Oscar Choles' Petition with reference to "Improvements in Stocks and Dies for Screw-threading Pipes and other articles," for our report, that we see no objection to the issue of Letters of Registration in accordance with Mr. H. O. Choles' Petition, specification, drawings, and claim.

We have, &c.,

GOTHER K. MANN.
ROBERT GEO. MASSIE.

The Principal Under Secretary.

[Drawings—one sheet.]

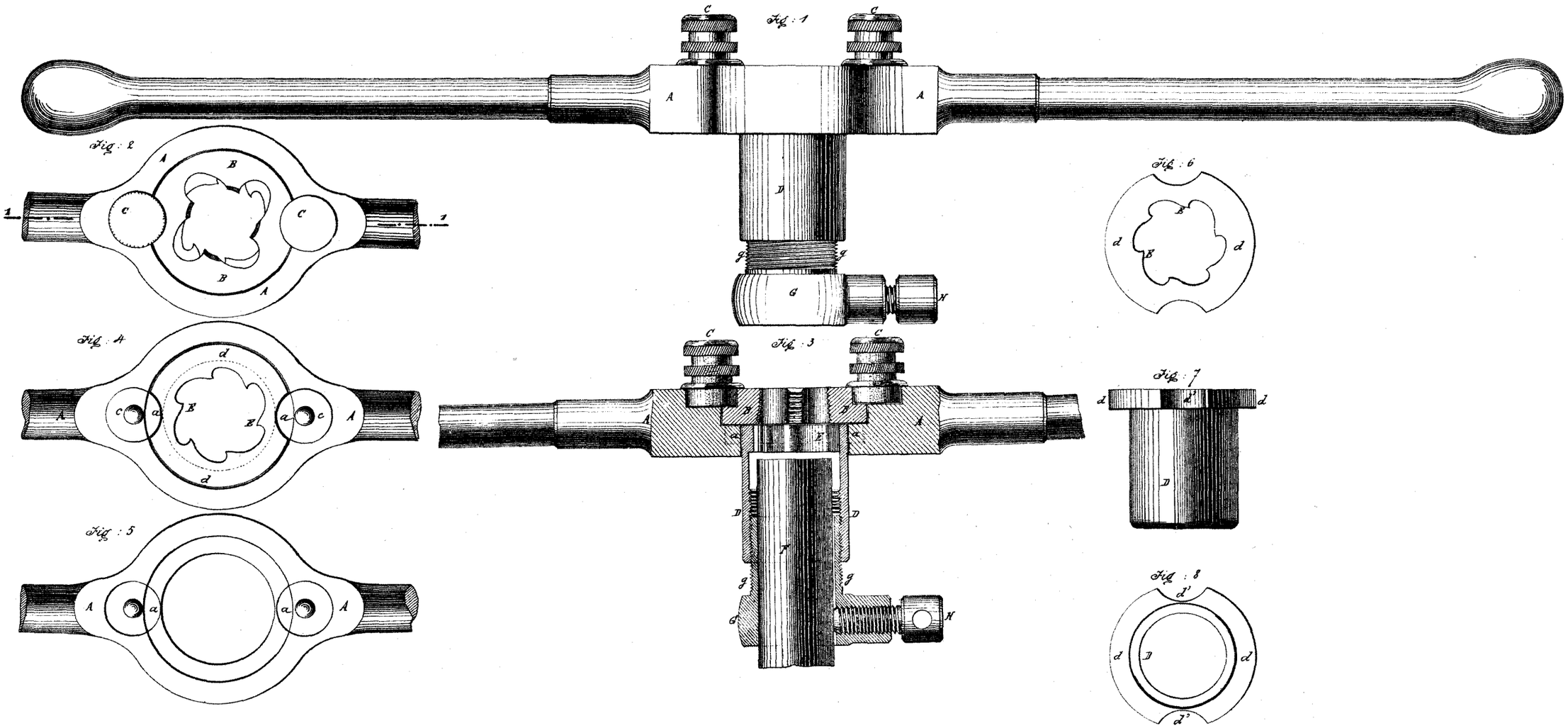

This is the Sheet of Drawings referred to in the annexed Letters of Registration granted to Harry Oscar Choles this twelfth day of September. A.D. 1879 –

(Sig: 198 –) Augustus Loftus

PHOTO-LITHOGRAPHED AT THE GOVT. PRINTING OFFICE, SYDNEY, NEW SOUTH WALES.

A.D. 1879, 12*th September*. No. 761.

IMPROVEMENTS IN APPARATUS FOR PRODUCING OPTICAL ILLUSIONS.

LETTERS OF REGISTRATION to John Henry Pepper, for Improvements in Apparatus for producing Optical Illusions.

[Registered on the 13th day of September, 1879, in pursuance of the Act 16 Vic. No. 24.]

BY His Excellency the Right Honorable Sir Augustus William Frederick Spencer Loftus (commonly called Lord Augustus Loftus), Knight Grand Cross of the Most Honorable Order of the Bath, a Member of Her Majesty's Most Honorable Privy Council, Governor and Commander-in-Chief of the Colony of New South Wales and its Dependencies.

TO ALL TO WHOM THESE PRESENTS SHALL COME, greeting:

WHEREAS John Henry Pepper, lately Professor of Chemistry, &c., at the Royal Polytechnic Institution, London, but now residing at Melbourne, in the Colony of Victoria, hath by his Petition humbly represented to me that he is the author or designer of a certain invention or improvement in manufactures, that is to say, for an invention of "Improvements in Apparatus for producing Optical Illusions," which is more particularly described in the specification and the sheet of drawings which are hereunto annexed; and that he, the said Petitioner, hath deposited with the Honorable the Treasurer of the said Colony of New South Wales the sum of Twenty pounds sterling, for defraying the expense of granting these Letters of Registration, as required by the Act of Council, sixteenth Victoria, number twenty-four; and hath humbly prayed that I would be pleased to grant Letters of Registration, whereby the exclusive enjoyment and advantage of the said invention or improvement might be secured to him for a period of fourteen years: And I, being willing to give encouragement to all inventions and improvements in the arts or manufactures which may be for the public good, and having received a report favourable to the prayer of the said Petition, from competent persons appointed by me to examine and consider the matters stated therein and to report thereon for my information, am pleased, with the advice of the Executive Council, and in exercise of the power and authority given to me by the said Act of Council, to grant, and do by these Letters of Registration grant unto the said John Henry Pepper, his executors, administrators, and assigns, the exclusive enjoyment and advantage of the said invention or improvement, for and during the term of fourteen years from the date hereof; to have, hold, and exercise unto the said John Henry Pepper, his executors, administrators, and assigns, the exclusive enjoyment and advantage thereof, for and during and unto the full end and term of fourteen years from the date of these presents next and immediately ensuing, and fully to be complete and ended: Provided always, that if the said John Henry Pepper shall not, within three days after the granting of these Letters of Registration, register the same in the proper office in the Supreme Court, at Sydney, in the said Colony of New South Wales, then these Letters of Registration, and all advantages whatsoever hereby granted, shall cease and become void.

In witness whereof, I have hereunto set my sign manual, and have caused the present Letters of Registration to be sealed with the seal of the said Colony of New South Wales, at Government House, Sydney, in New South Wales, this twelfth day of September, in the year of our Lord one thousand eight hundred and seventy-nine.

[L.S.]

AUGUSTUS LOFTUS.

SPECIFICATION

Improvements in Apparatus for producing Optical Illusions.

SPECIFICATION of JOHN HENRY PEPPER, lately Professor of Chemistry, &c., at the Royal Polytechnic Institution, London, but now residing at Melbourne, in the Colony of Victoria, for an invention of Improvements in Apparatus for producing Optical Illusions.

THE object of this invention is to make it appear that persons or objects gradually come into being out of thin air, and to make it appear that one person or object gradually dissolves into nothing, and is substituted by another person or object evolved out of nothing.

The essential feature of my invention is what I call a graduated mirror, that is a mirror in which the quicksilver behind is gradually reduced from a solid covering to thick and then thin lines, and finally to none at all. These lines may be arranged in any way, and in fact the gradation from the solid opaque mirror to the transparent clear glass may be effected in any convenient manner, but I find horizontal lines to answer well.

To make a person gradually appear to come out of nothing it is only necessary that the opaque part of my graduated mirror should separate him from the spectators, and then that my mirror should be gradually drawn away from in front of him. To make him disappear again it is only necessary to push the mirror in front of him again. To increase the effect of the illusion I prefer that the mirror should run obliquely between the object or person and the spectators.

To make it appear that one person or object is substituted for another it is necessary to have a chamber of equal angles, and hung or adorned in an exactly similar manner. In one corner (which is hidden from the audience) is a person or object, the reflection of which is seen by the spectators, although they think it is the reality. In the opposite corner is another person or object, which is not seen until the mirror is withdrawn, when the reflection gradually disappears and is substituted by the reality.

In order however that my invention may be clearly understood, I will proceed to refer to the diagrams hereto attached, where figure 1 shows a plan of a chamber in which my illusions may be produced. This chamber is twelve feet square and eight feet high. It has a groove across the top and bottom running obliquely from one corner to another, as indicated by a thick black line, A, and an imitation of this groove running obliquely between the opposite corners, and indicated by a red line, B, so that the reflection of the one may be imitated by the appearance of the other. The mirror C is supported in suitable framing, and runs with V-wheels on V-shaped rails, as shown in figure 2. It has a handle C' at the back. The angle *a a* must in every respect be exactly alike that marked *b b*. The line *c* must be a continuation of the line *d*, and similar to it in outward appearance. About half-way up the corner towards which the mirror runs, there are four jets on a horizontal pipe. Figure 3 shows isometrical perspective of my chamber from one point of view with the graduated mirror drawn back, whilst figure 4 shows a similar kind of view from another point and with the graduated mirror drawn across the chamber as far as it goes.

It will be seen from these diagrams that the persons pushing and pulling the mirror to and fro are hidden by the curtains, whilst the edge of the mirror only is very slightly perceptible, and then only to the closest observer. The noise of the movement is not audible in a building of any size, and especially while the music is playing or the lecturer speaking.

Having thus described the nature of my invention, and the manner of performing it, I would have it understood that, without confining myself to the precise details herein set forth, so long as the nature of my invention be retained, nor to the precise character of the illusions produced by my improvements, I claim the construction and use of a graduated mirror for producing optical illusions, substantially as herein described and explained.

In witness whereof, I, the said John Henry Pepper, have hereto set my hand and seal, this seventh day of August, one thousand eight hundred and seventy-nine.

J. H. PEPPER.

Witness—W. S. BAYSTON,
Clerk to Edward Waters,
Patent Agent, Melbourne.

This is the specification referred to in the annexed Letters of Registration granted to John Henry Pepper, this twelfth day of September, A.D. 1879.

AUGUSTUS LOFTUS.

REPORT.

Chief Telegraph Office, Sydney, 16 August, 1879.

Sir,

The application of Professor Pepper for Letters of Registration for "Improvements in Apparatus for producing Optical Illusions" having been referred to us, we have examined the specification and drawings accompanying the same, and have now the honor to report that we see no objection to the issue of Letters of Registration as prayed for.

We have, &c.,
J. SMITH.
E. C. CRACKNELL.

The Principal Under Secretary.

[Drawings—one sheet.]

PROFESSOR PEPPER'S-PATENT.

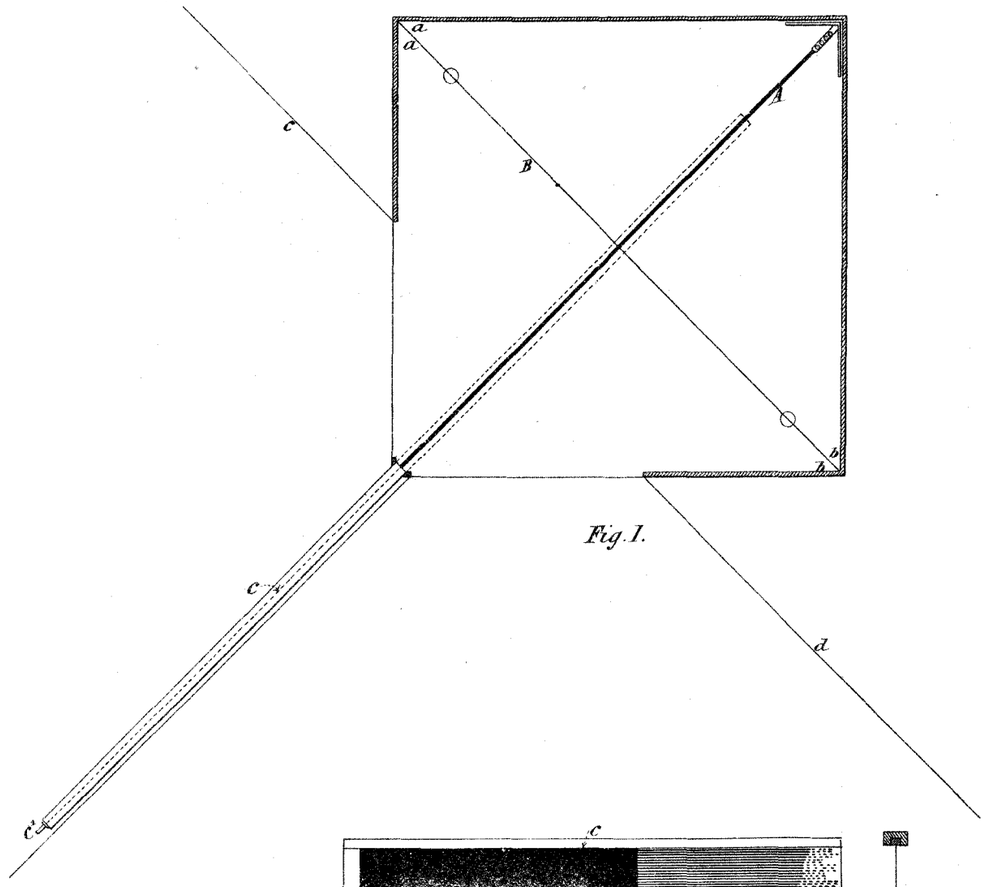

Fig. 1.

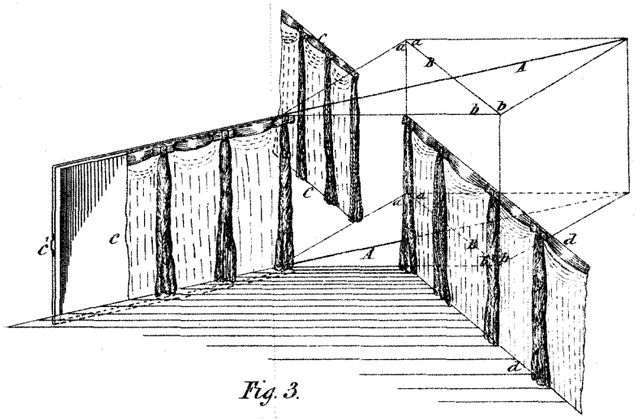

Fig. 3.

Fig. 4.

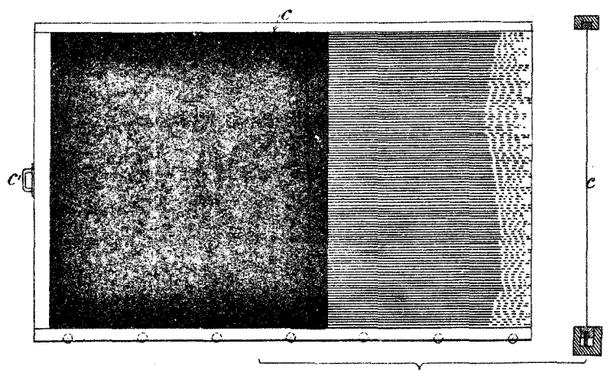

Fig. 2.

This is the Sheet of Drawings referred to in the annexed Letters of Registration granted to John Henry Pepper, this twelfth day of September, A.D. 1879.

Augustus Loftus.

PHOTO-LITHOGRAPHED AT THE GOVT. PRINTING OFFICE, SYDNEY, NEW SOUTH WALES.

A.D. 1879, 12*th September*. No. 762.

INVENTION FOR GOVERNING OR REGULATING THE PRESSURE OF FLUIDS.

LETTERS OF REGISTRATION to William L. Horne, for an Invention for governing or regulating the Pressure of Fluids.

[Registered on the 13th day of September, 1879, in pursuance of the Act 16 Vic. No. 24.]

BY His Excellency the Right Honorable Sir Augustus William Frederick Spencer Loftus (commonly called Lord Augustus Loftus), Knight Grand Cross of the Most Honorable Order of the Bath, a Member of Her Majesty's Most Honorable Privy Council, Governor and Commander-in-Chief of the Colony of New South Wales and its Dependencies.

TO ALL TO WHOM THESE PRESENTS SHALL COME, greeting:

WHEREAS William L. Horne, of the city of Meriden, in the State of Connecticut, in the United States of America, hath by his Petition humbly represented to me that he is the author or designer of a certain invention or improvement in manufactures, that is to say, of an "Invention for governing or regulating the Pressure of Fluids," which is more particularly described in the specification and the sheet of drawings which are hereunto annexed; and that he, the said Petitioner, hath deposited with the Honorable the Treasurer of the said Colony of New South Wales the sum of Twenty Pounds sterling, for defraying the expense of granting these Letters of Registration, as required by the Act of Council, sixteenth Victoria, number twenty-four; and hath humbly prayed that I would be pleased to grant Letters of Registration, whereby the exclusive enjoyment and advantage of the said invention or improvement might be secured to him for a period of fourteen years: And I, being willing to give encouragement to all inventions and improvements in the arts or manufactures which may be for the public good, and having received a report favourable to the prayer of the said Petition, from competent persons appointed by me to examine and consider the matters stated therein and to report thereon for my information, am pleased, with the advice of the Executive Council, and in exercise of the power and authority given to me by the said Act of Council, do grant, and do by these Letters of Registration grant unto the said William L. Horne, his executors, administrators, and assigns, the exclusive enjoyment and advantage of the said invention or improvement, for and during the term of fourteen years from the date hereof; to have, hold, and exercise unto the said William L. Horne, his executors, administrators, and assigns, the exclusive enjoyment and advantage thereof, for and during and unto the full end and term of fourteen years from the date of these presents next and immediately ensuing, and fully to be complete and ended: Provided always, that if the said William L. Horne shall not, within three days after the granting of these Letters of Registration, register the same in the proper office in the Supreme Court at Sydney, in the said Colony of New South Wales, then these Letters of Registration, and all advantages whatsoever hereby granted, shall cease and become void.

In witness whereof, I have hereunto set my sign manual, and have caused the present Letters of Registration to be sealed with the seal of the said Colony of New South Wales, at Government House, Sydney, in New South Wales, this twelfth day of September, in the year of our Lord one thousand eight hundred and seventy-nine.

[L.S.] AUGUSTUS LOFTUS.

A.D. 1879. No. 762.

Invention for governing or regulating the Pressure of Fluids.

SPECIFICATION of WILLIAM L. HORNE, of the city of Meriden, in the State of Connecticut, in the United States of America, of an Invention for governing or regulating the Pressure of Fluids.

Now know ye, that I, the said William L. Horne, do hereby declare the nature of the said invention, and in what manner the same is to be performed, to be particularly described and ascertained in and by the following statement or specification and drawings (that is to say) :—

It consists in governing a normally balanced valve controlling the flow of the gas or other fluid by a changing column of fluid of greater specific gravity than the fluid to be regulated, which is carried in a vessel superimposed upon the valve, and which communicates, through a primed syphon, with a body of the same fluid contained in an open reservoir on a lower level, and exposed to the pressure of the fluid to be regulated on the induction side of the valve. The fluid is automatically pumped into and out of the vessel on the valve by the syphon according as the pressure in the main increases or decreases, and the valve in consequence throttled more or less, so as to maintain a uniform given pressure in the service pipe under a varying pressure in the main.

A is the pipe proceeding from the main, and B the pipe by which the fluid enters the service pipe. Both open into a box, C, which box is divided by a partition, N, through which there is a valve opening, D, being controlled by a V or U-shaped lever, O, held by a flexible fulcrum or hinge, M, and made tight by suitable packing, usually rubber, through the top of said box C and the upper end of lever O, extending to a point immediately above the valve, where it connects with and carries an open cylindrical vessel, E.

That part of box C below the partition N communicates through an opening, P, with an air-tight chamber, F, in which is suspended an open tank or reservoir, G, by a screw-spindle, S, through a nut, T, in the top of the chamber F. By this means the tank may be readily adjusted vertically with reference to the vessel E of the valve. Ordinarily the top of the tank will be on about a level with the bottom of the vessel E. V is a flat, thin, firm plate, nearly as large as the inside of vessel E, and fixed solid to the syphon, and serves as a centre-board to a boat, when it is covered with the fluid, to keep the vessel E and valve from trembling. H is a syphon, the long leg of which dips into the tank G, while its short leg enters and passes down through vessel E into an extension, L, of vessel E, and only large enough to admit the syphon without touching. The tank is filled with glycerine or any other suitable fluid covering the long leg of the syphon, which remains continually primed, its short leg being also covered with a like fluid in the extension L of vessel E. The level of the fluid in the vessel E will be at a greater or lesser elevation above that in the tank according as the pressure of the fluid in the main increases or diminishes, and the elevation of the tank will be so regulated by means of the adjusting screw S that under a normal pressure the fluid in the vessel E will just rise to the upper end of extension L, containing the short leg of the syphon.

The respective areas in cross-section of the tank G and vessel E must always bear such proportion to each other and to the valve opening that under an augmented pressure in the main, and consequent change in the level of the fluids in the tank G and weighting vessel E, the increase of volume in the latter will exactly counterbalance the excess of pressure in the main, and throttle the valve to maintain the desired uniform pressure in the service pipe.

The valve has a little play on its stem to adjust itself on its seat, and is balanced by a spring, R.

This apparatus is more especially designed for governing the flow of gas to burners, but it may be employed for regulating the flow of water and steam.

What I claim and desire to secure by Letters of Registration is—

First—A, B, C, and N, substantially as described.

Second—O, D, and M, substantially as described.

Third—L, V, and R, substantially as described; and all the above claims in combination with vessel E, tank G, chamber F, and syphon H, all substantially as described.

WILLIAM L. HORNE.

Witness—JOHN SHEPHERD, Solicitor, Sydney.

(By his Attorney, GUY H. GARDNER).

This is the specification referred to in the annexed Letters of Registration granted to William L. Horne, this twelfth day of September, A.D. 1879.

AUGUSTUS LOFTUS.

REPORT.

Sir,

Sydney, 16 August, 1879.

The application of Mr. William L. Horne for Letters of Registration for an "Invention for governing or regulating the pressure of Fluids" having been referred to us, we have examined the specification and drawings accompanying the same, and have now the honor to report that we see no objection to the issue of Letters of Registration as prayed for.

We have, &c.,

J. SMITH.

CHAS. WATT.

The Principal Under Secretary.

[Drawings—one sheet.]

No. 763.

[Assignment of No. 652. See Letters of Registration for 1878, page 1.]

No. 764.

[Assignment of Letters Patent in England of 11 October, 1876.]

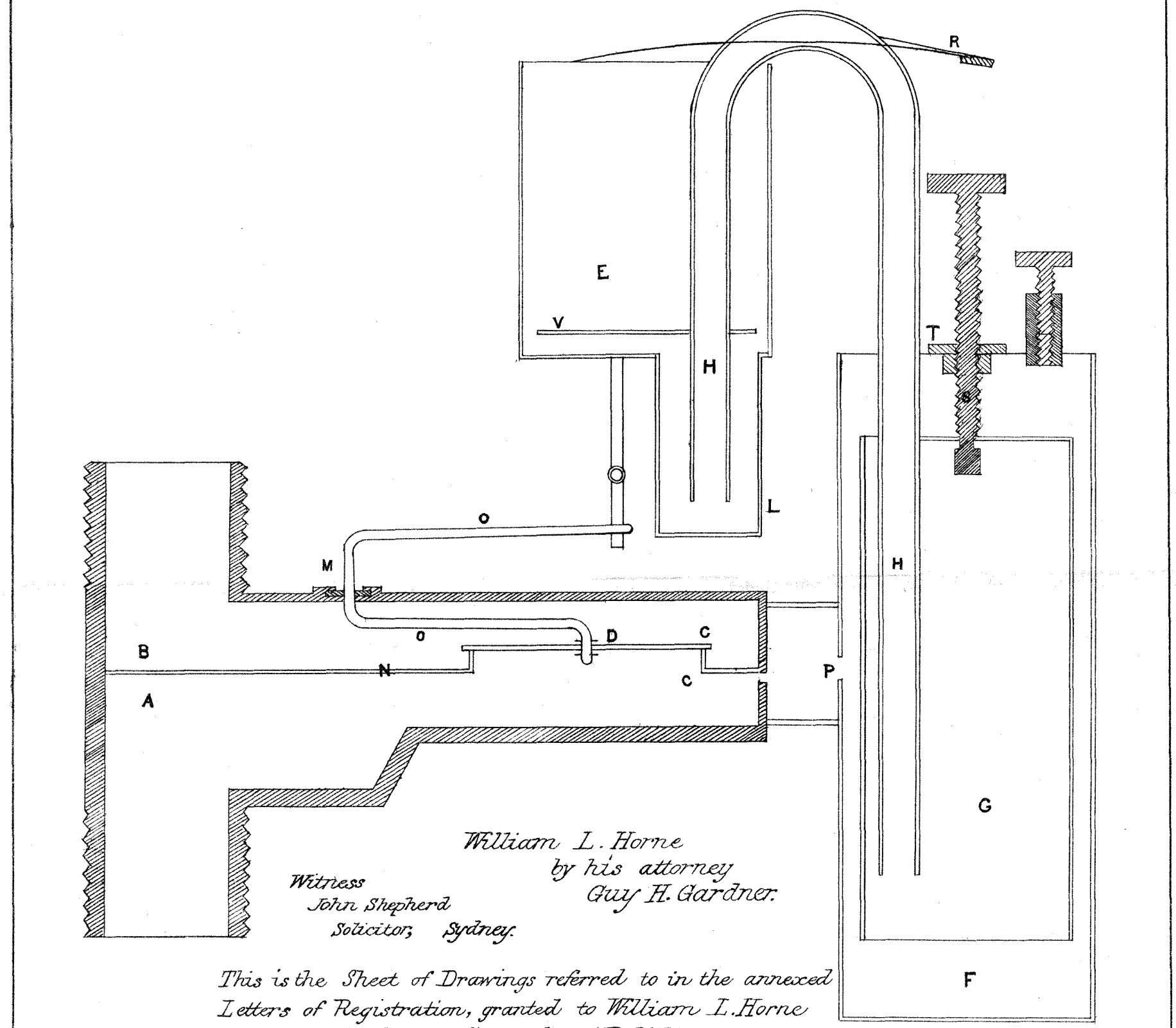

William L. Horne
by his attorney
Guy H. Gardner.

Witness
John Shepherd
Solicitor; Sydney.

This is the Sheet of Drawings referred to in the annexed Letters of Registration, granted to William L. Horne this twelfth day of September, A.D. 1879.

Augustus Loftus.

(Sig: 198-)

A.D. 1879, 29*th September*. No. 765.

IMPROVEMENTS IN MEANS OR APPARATUS EMPLOYED IN HUSKING AND OTHERWISE DECORTICATING AND POLISHING RICE, &c.

LETTERS OF REGISTRATION to James Henry Channing Martin, for Improvements in Means and Apparatus employed in husking and otherwise decorticating and polishing Rice and other kinds of Grain and Seeds.

[Registered on the 30th day of September, 1879, in pursuance of the Act 16 Vic. No. 24.]

BY His Excellency the Right Honorable Sir Augustus William Frederick Spencer Loftus (commonly called Lord Augustus Loftus), Knight Grand Cross of the Most Honorable Order of the Bath, a Member of Her Majesty's Most Honorable Privy Council, Governor and Commander-in-Chief of the Colony of New South Wales and its Dependencies.

TO ALL TO WHOM THESE PRESENTS SHALL COME, greeting:

WHEREAS James Henry Channing Martin, of Thornleigh, Upper Clapton, in the county of Middlesex, in England, rice miller, hath by his Petition humbly represented to me that he is the author or designer of a certain invention or improvement in manufactures, that is to say, of an invention entitled "Improvements in Means or Apparatus employed in husking and otherwise decorticating and polishing Rice and other kinds of Grain and Seeds," which is more particularly described in the specification and the sheet of drawings which are hereunto annexed; and that he, the said Petitioner, hath deposited with the Honorable the Treasurer of the said Colony of New South Wales the sum of Twenty Pounds sterling, for defraying the expense of granting these Letters of Registration, as required by the Act of Council, sixteenth Victoria, number twenty-four; and hath humbly prayed that I would be pleased to grant Letters of Registration, whereby the exclusive enjoyment and advantage of the said invention or improvement might be secured to him for a period of fourteen years: And I, being willing to give encouragement to all inventions and improvements in the arts or manufactures which may be for the public good, and having received a report favourable to the prayer of the said Petition, from competent persons appointed by me to examine and consider the matters stated therein and to report thereon for my information, am pleased, with the advice of the Executive Council, and in exercise of the power and authority given to me by the said Act of Council, to grant, and do by these Letters of Registration grant unto the said James Henry Channing Martin, his executors, administrators, and assigns, the exclusive enjoyment and advantage of the said invention or improvement, for and during the term of fourteen years from the date hereof; to have, hold, and exercise unto the said James Henry Channing Martin, his executors, administrators, and assigns, the exclusive enjoyment and advantage thereof, for and during and unto the full end and term of fourteen years from the date of these presents next and immediately ensuing, and fully to be complete and ended: Provided always, that if the said James Henry Channing Martin shall not, within three days after the granting of these Letters of Registration, register the same in the proper office in the Supreme Court, at Sydney, in the said Colony of New South Wales, then these Letters of Registration, and all advantages whatsoever hereby granted, shall cease and become void.

In witness whereof, I have hereunto set my sign manual, and have caused the present Letters of Registration to be sealed with the seal of the said Colony of New South Wales, at Government House, Sydney, in New South Wales, this twenty-ninth day of September, in the year of our Lord one thousand eight hundred and seventy-nine.

[L.S.] AUGUSTUS LOFTUS.

A.D. 1879. No. 765.

Improvements in Means or Apparatus employed in husking Rice, &c.

SPECIFICATION of JAMES HENRY CHANNING MARTIN, of Thornleigh, Upper Clapton, in the county of Middlesex, in England, rice miller, for an invention entitled "Improvements in Means or Apparatus employed in husking and otherwise decorticating and polishing Rice and other kinds of Grain and Seeds."

THE invention has for its object improvements in means or apparatus employed in husking and otherwise decorticating and polishing rice and other kinds of grain and seeds.

For this purpose I employ one or more segments of a hollow drum or cylinder in combination with revolving cylindrical surfaces. The grain or seeds are fed into the space between the concave side of the segment or segments and the cylinder by means of a hopper along the entire length of the cylinder and segment or segments.

The segment or segments is or are adjusted at such a distance from the revolving cylinder as will suit the particular grain or seed under treatment, and the feed thereto is regulated according to the action of the cylinder, as no more grain or seed can be taken by the cylinder than the space between the cylinder and segment or segments will permit.

And in order that my said invention may be more clearly understood and readily carried into effect, I will proceed, aided by the accompanying drawings, more fully to describe the same.

DESCRIPTION OF THE DRAWINGS.

Figure 1 represents a cross section, and figure 2, a side elevation of machinery or apparatus constructed according to my invention for husking and otherwise decorticating and polishing rice and other grain and seeds.

a is the driving axis, upon which is fixed a cylinder *b* and driving pulley *c*. This cylinder may be formed as represented in the drawing with a periphery of wood covered with an emery composition, or the surface thereof may be otherwise formed and of different materials. Around the cylinder I fix one or more segments, *d*, each of which is provided with projections, d^1, which fit and are capable of sliding within grooves or ways e^1 formed in the end frames *e*.

These end frames carry the bearings for the axis or shaft *a*, and are connected together by tie-rods, e^2, which serve to maintain them at the required distance apart from each other. To these end frames *e* are also fixed thrust bars, e^3, extending from frame to frame.

The segments *d* as shown in the drawing are formed of cast-iron frames covered on the concave side with wood, to which a vulcanized india-rubber frictional or rubbing surface is fixed, but they can be otherwise formed and provided with other descriptions of rubbing or frictional surfaces as may be found desirable.

The segments *d* are adjusted to and maintained at the required distance from the cylinder *b* by means of screwed rods d^2 fixed into the backs thereof, and passed through holes formed in the thrust-bars e^3, and acted upon by nuts d^4 as shown.

Slides d^3 are carried by the segments *d*, so as to completely close the spaces between them as required, and thereby permit of adjustment for wear of the parts; *f* is the hopper for supplying the grain or seed to be operated upon to the machine, and f^1 are a series of adjustment doors to the mouth of such hopper, to regulate the supply according to the description of seed or grain under treatment.

The spaces in the hopper *f* between the doors f^1 are provided with inclined guides, f^2, to guide the grain or seed to the openings; *g* is a delivery spout.

If desired, instead of employing slides f^1 and guides f^2, the mouth of the hopper may be open along its entire length, and the feed regulated by a roller, as is well understood.

By these means the speed of the grain passing between the surfaces of the revolving drum or cylinder and the concave side of the segment or segments will be uniform over the whole working surface; therefore the friction or pressure applied will be equal on every grain or seed and consequently a more rapid and perfect result will be obtained, with less waste of the grain or seed acted upon, and at a less expense than that hitherto incurred for such purpose.

Having thus described the nature of my said invention and the mode I have found to answer in carrying the same into effect, I would have it understood that what I claim is—

The employment of a revolving cylindrical surface in combination with a segment or segments of a hollow drum or cylinder provided with suitable rubbing or frictional surfaces to act upon the rice, grain, or seed, in manner and for the purpose substantially as herein shown and described.

In witness whereof, I, the said James Henry Channing Martin, have hereto set my hand and seal, this thirtieth day of April, 1879.

J. H. C. MARTIN.

Witness—
C. TURNER ROOM,
Solicitor, 12, Bouverie-street, London.

This is the specification referred to in the annexed Letters of Registration granted to James Henry Channing Martin, this twenty-ninth day of September, A.D. 1879.

AUGUSTUS LOFTUS.

REPORT.

Improvements in Means or Apparatus employed in husking Rice, &c.

REPORT.

Sir,

Sydney, 2 September, 1879.

We do ourselves the honor to report, in reply to your blank cover communication of the 28th ultimo, No. 6,633, that we see no objection to the issue of Letters of Registration in favour of Mr. James Henry Channing Martin, in accordance with Mr. Martin's Petition, specification, drawings, and claim, entitled "Improvements in Means or Apparatus employed in husking and otherwise decorticating and polishing Rice and other kinds of Grain and Seeds."

We have, &c.,
GOTHER K. MANN.
ROBERT GEO. MASSIE.

The Principal Under Secretary.

[Drawings—one sheet.]

J. H. C. Martin's Patent

FIG. 1.

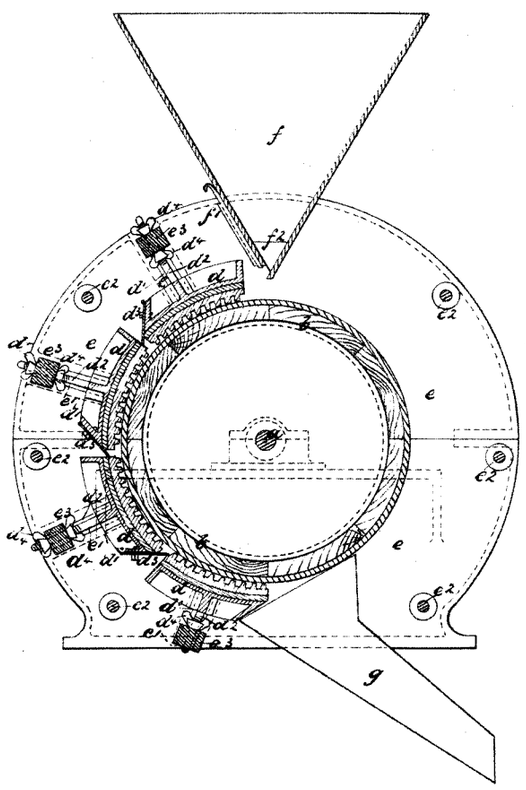

FIG. 2.

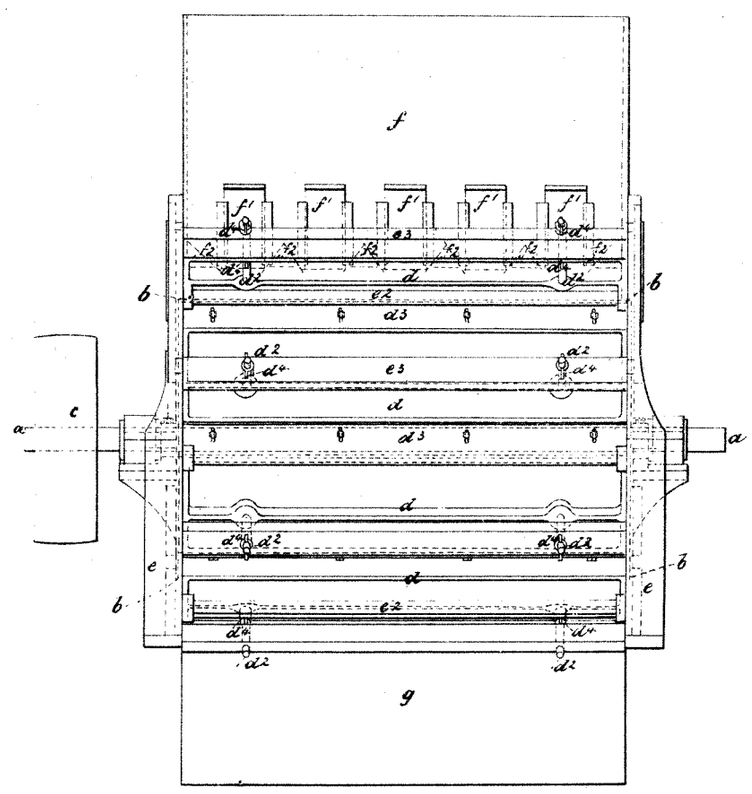

This is the sheet of Drawings referred to in the annexed Letter of Registration granted to James Hemp Channing Martin this twenty-ninth day of September A.D. 1879
(Sig: 198)

Augustus Loftus

A.D. 1879, 29*th September*. No. 766.

IMPROVEMENTS IN THE PREPARATION OF PRESERVED MEAT, &c.

LETTERS OF REGISTRATION to Margarethe Meinert and Conrad Warnecke, for Improvements in the preparation of Preserved Meat or compounds of the same with other substances.

[Registered on the 30th day of September, 1879, in pursuance of the Act 16 Vic. No. 24.]

BY HIS EXCELLENCY THE RIGHT HONORABLE SIR AUGUSTUS WILLIAM FREDERICK SPENCER LOFTUS (commonly called LORD AUGUSTUS LOFTUS), Knight Grand Cross of the Most Honorable Order of the Bath, a Member of Her Majesty's Most Honorable Privy Council, Governor and Commander-in-Chief of the Colony of New South Wales and its Dependencies.

TO ALL TO WHOM THESE PRESENTS SHALL COME, greeting:

WHEREAS MARGARETHE MEINERT, of Leipzig, and CONRAD WARNECKE, of Hamburgh, both in the Empire of Germany, have by their Petition humbly represented to me that they are the assignees of a certain invention or improvement in manufactures, that is to say, of an invention of "Improvements in the preparation of Preserved Meat or compounds of the same with other substances," which is more particularly described in the specification which is hereunto annexed; and that they, the said Petitioners, have deposited with the Honorable the Treasurer of the said Colony of New South Wales the sum of Twenty Pounds sterling, for defraying the expense of granting these Letters of Registration, as required by the Act of Council, sixteenth Victoria, number twenty-four; and have humbly prayed that I would be pleased to grant Letters of Registration, whereby the exclusive enjoyment and advantage of the said invention or improvement might be secured to them for a period of fourteen years: And I, being willing to give encouragement to all inventions and improvements in the arts or manufactures which may be for the public good, and having received a report favourable to the prayer of the said Petition, from competent persons appointed by me to examine and consider the matters stated therein and to report thereon for my information, am pleased, with the advice of the Executive Council, and in exercise of the power and authority given to me by the said Act of Council, to grant, and do by these Letters of Registration grant unto the said Margarethe Meinert and Conrad Warnecke, their executors, administrators, and assigns, the exclusive enjoyment and advantage of the said invention or improvement, for and during the term of fourteen years from the date hereof; to have, hold, and exercise unto the said Margarethe Meinert and Conrad Warnecke, their executors, administrators, and assigns, the exclusive enjoyment and advantage thereof, for and during and unto the full end and term of fourteen years from the date of these presents next and immediately ensuing, and fully to be complete and ended: Provided always, that if the said Margarethe Meinert and Conrad Warnecke shall not, within three days after the granting of these Letters of Registration, register the same in the proper office in the Supreme Court, at Sydney, in the said Colony of New South Wales, then these Letters of Registration, and all advantages whatsoever hereby granted, shall cease and become void.

In witness whereof, I have hereunto set my sign manual, and have caused the present Letters of Registration to be sealed with the seal of the said Colony of New South Wales, at Government House, Sydney, in New South Wales, this twenty-ninth day of September, in the year of our Lord one thousand eight hundred and seventy-nine.

[L.S.] AUGUSTUS LOFTUS.

Improvements in the preparation of Preserved Meat, &c.

SPECIFICATION of MARGARETHE MEINERT, of Leipzig, and CONRRAD WARNECKE, of Hamburg, both in the Empire of Germany, for "Improvements in the preparation of Preserved Meat, or compounds of the same with other substances."

THIS invention relates to improved processes for the treatment of meat with a view to its preservation from decomposition, by means of which meat may be prepared for consumption in five different forms, viz.:—

1. Desiccated meat.
2. Meat powder.
3. Meat tablets, composed exclusively of meat powder.
4. Meat tablets, composed of meat powder combined with vegetable matter.
5. Biscuits and rusks and other suitable forms, composed of meat powder, combined with vegetable substances.

These forms of preserved meat are prepared by means of the processes hereinafter described as follows:—

First.—The desiccated meat is obtained from muscular tissue, which is separated from the bones immediately after the animal has been slaughtered and flayed; all the fat and blood is then removed, and the meat in this condition is divided into strips of any convenient length, and (say) about 8 inches broad and 1 inch thick, and any particles of fat still adhering to it are carefully removed, after which parallel incisions are made across each strip, say about three-quarters of an inch apart. All these operations are performed in large close rooms, in which sulphide of carbon is subjected to evaporation to the greatest extent possible without injury to the workmen engaged, whereby not only are insects kept off and prevented from depositing their eggs on the meat, but the presence of gaseous sulphide of carbon protects the meat for a sufficient length of time from becoming unfit for the succeeding operations.

Immediately after the preceding operations, which should be performed in the shortest possible space of time, finely powdered culinary salt is spread over the meat in the proportion of 3 per cent. of salt to the weight of meat.

The pieces of meat salted in the presence of sulphide of carbon, as hereinbefore described, are then submitted to a preliminary drying process at a temperature of from (say) about 122° to about 140° Fahrenheit, after which they are subjected to a process of desiccation at a temperature of (say) about 212° Fahrenheit.

The drying house is constructed with a vaulted chamber at the lower part, in which violently moved air is heated by means of stoves, boilers, or any other suitable appliances, and over this chamber are arranged the drying and desiccating chambers, into which the hot violently moved air, after being raised to the required temperature, is introduced through pipes in the roof of the heating chamber.

The drying chambers contain a series of horizontal bars, fastened in parallel rows to the roof at alternate distances of (say) about 20 and 35 inches apart, upon which bars the pieces of salted meat are hung by means of hooks in such a manner as to form regular partitions. The hot air entering through the pipes before mentioned ascends on one side of the meat partitions, and descends to the floor on the other side, whence it leaves the room through suitable outlet pipes.

The temperature of the drying chambers should be maintained at between (say) 122° and 140° Fahrenheit, according to the temperature of the external air and of the degree of moisture which it contains.

Thermometers are provided in the drying chamber over each hot air inlet to afford the necessary guidance for regulating the admission of heat, which is effected by partially or entirely closing one or more of the pipes through which the hot air enters. Shallow vessels containing cotton wool saturated with sulphide of carbon are provided in the drying chambers, the fumes from which serve to prevent insects from depositing their eggs upon the meat.

The period of drying occupies, according to the condition of the atmosphere, say from eight to twelve hours, and the result of the process is that at least one-third of the water contained in the meat is carried away. When the operation is completed, the pipes through which the hot air enters are closed, and holes provided in the roof between the bars for the admission of light and air are opened and the dried meat is removed, freshly salted pieces being substituted in its place.

The dried meat is then spread out on frames or racks in the open air, and exposed to the action of the sun's rays until it has lost from (say) 33 to 40 per cent. of the remaining moisture. The duration of this desiccating process necessarily depends upon the temperature and dryness of the atmosphere, as well as upon any currents or winds which may prevail. When the moisture contained in the meat is reduced by means of the drying and desiccating processes to not more than (say) one-third of the original quantity, the meat is capable of being stored for several months, or of being transported from place to place, or sent abroad, without risk of decomposition. For this purpose it should be compressed by means of hydraulic presses, and transported in the form of bales.

The desiccating process hereinbefore described differs from that usually employed in tropical regions in the following particulars:—

The result of the special preliminary drying process is that the meat treated with an addition of 3 per cent. of salt not only retains all its nutritive qualities unchanged, but by means of this process and the simultaneous presence of sulphide of carbon, it is prepared in such a manner for the subsequent desiccating operation that it may be exposed for a lengthened period to the action of the sun's rays without any chemical change taking place in its juices. According to the process usually adopted in tropical climates, on the other hand, the drying of the meat after its preparation by the addition of an uncertain and frequently very considerable quantity of salt being effected by the natural heat of the atmosphere alone, the meat loses the greater portion of the juices which are peculiar to it, and even a portion of the albumen, so that it not only is deprived of much of its flavour, but also much of its nutritive qualities.

The process of drying in the presence of sulphide of carbon, as hereinbefore described, has the effect of hardening the whole surface of the meat, forming a sort of protecting covering which is not subject to hygroscopic action, and the interior is therefore protected from contact with and the influence of the atmosphere.

atmosphere. The preliminary drying process thus operates for the protection as well as for the preservation of the meat, and enables it to retain its original flavour after the process of desiccation is completed.

Second.—The powder is obtained from meat prepared as hereinbefore described, for which purpose it is necessary to subject such meat to a further process of desiccation, whereby the whole of the remaining moisture is eliminated. For this purpose the dried meat is formed by means of suitable apparatus into cubes, each containing about 3 cubic inches, and in this condition it is introduced into a special desiccating chamber, situate over a heating chamber similar to those hereinbefore described.

The front wall of this desiccating chamber is formed by a cast-iron frame provided with (say) eight or twelve doors in two rows, the one above the other; each desiccating chamber is also provided with a stand made of flat and angle iron carrying a series of iron frames or racks. Each single frame or rack can be drawn out with facility when the corresponding door is opened to admit of charging or discharging its contents. The weight of a rack when covered with a layer of cubes of meat to a depth of (say) from 3 to 4 inches amounts to about 50 lbs.; the rack can therefore be manipulated by two persons with facility.

The hot and also violently moved air from the heating chamber below rises through several equidistant openings left in the back wall underneath the lowest rack in each desiccating chamber, then passes through the interstices of the meat cubes, and escapes through suitable adjustable openings in the upper part of the iron front wall. For the purpose of ascertaining the temperature (which should not be allowed to exceed say 212° Fahrenheit) two thermometers are provided at the upper and lower part respectively of the front wall of each desiccating chamber, the said thermometers being arranged in such a manner that the bulbs project (say) about 4 inches into the interior of the chamber.

When the cubes of meat have been exposed for a period of (say) about twelve hours to a temperature of 212°, and have been deprived of nearly all their moisture, the racks are taken out, and, after being emptied, are again prepared for use.

In addition to having undergone a considerable diminution of specific gravity, the structure of the meat has become so changed in consequence of this last process of desiccation, that it has become almost as crisp and friable as charcoal, and is very amenable to pulverization; but in order that the product when ground may be as homogeneous as possible, it is necessary that the somewhat tough fibrous tissue should be separated and finely divided, for which purpose serrated conical rollers have been found most suitable. In other respects the subsequent preparation and treatment of the meat is similar to that of any other similar substance requiring pulverization, and ordinary appliances, such as sorting drums, elevators, spirals, and endless bands, may be employed. When it is desired to reduce the entire mass (with the exception of a residue of at the utmost 4 per cent.) to a fine powder, the coarser residuum of the first grinding must be passed a second and third time through the mill.

The meat powder contains on an average 10 per cent. of culinary salt, 5 per cent. of water, and 85 per cent. of dried meat, the latter consisting of 92 per cent. albumen and 8 per cent. extract and salts of meat. The presence of water in the meat powder is explained by the fact that the hygroscopic properties of the substance of the meat are again called into play as a result of the desiccating process, so that before and during the grinding it is capable of absorbing 5 per cent. of moisture from the air; it appears, however, to be incapable of absorbing any larger quantity.

When this meat powder is mixed with boiling water a more or less liquid mixture is obtained, according to the amount of water employed in which the salts and extract are held in solution, the said mixture possessing, in addition to the agreeable flavour of meat soup, all the nutritious qualities of the meat.

This mixture may, by the addition of flour or meal, potatoes or other vegetables, be made the basis for the preparation of thicker soups, which, as regards the amount of nutriment they contain and the agreeable flavour they possess, are in every respect similar to those prepared from five to seven times the same amount of fresh meat.

Third.—The meat tablets are obtained from the meat powder prepared as hereinbefore described, which in this form is better adapted for transportation and storage, by pressing the powder by means of hydraulic power into suitable moulds, under a pressure of at least 200 atmospheres. By this operation it acquires a specific gravity of 0·935. The moulds are provided with internal ridges, for the purpose of forming indentations in the tablets, with a view to facilitate their subdivision into equal portions.

The tablets are prepared for consumption in the same manner as the meat powder.

Fourth and fifth.—The meat tablets may be prepared in the same manner, with the addition of flour or meal, vegetables, fat, or any other suitable ingredients, and in the form of biscuits, rusks, sausages, or in any other convenient shape whereby they are rendered more especially adapted to military and naval requirements, and thus constitute a wholesome and palatable food, containing a proper proportion of that albumen in which food prepared exclusively from vegetables is found deficient.

The mixing process may be effected in any convenient manner, and the proportion of the meat powder to the vegetable or other matter may be varied as desired, provided that the mixture admits of being compressed into the form of tablets or other suitable shape of firm consistency. It is evident that when vegetables are added they should be previously subjected to the well-known processes of steaming, drying, and pulverizing. The addition of suet or any other description of fat has no prejudicial influence upon the peculiar properties of the food, but will have the effect of rendering it even more palatable, and obviates the necessity for adding fat when preparing it for consumption.

The meat powder, when prepared in the form of biscuits and rusks, is better adapted for the use of children, invalids, and especially consumption on board ship or for travellers' use.

The biscuits are made by mixing meat powder, in the proportion of (say) from about 15 to 50 per cent. of the weight of the whole mixture, with wheat flour (in the case of rusks with rye flour), and adding a small quantity of bicarbonate of soda to every pound of mixture, with powdered sugar, clarified fat, and spice, according to taste; the latter may be added in a semi-liquid form, in the form of essence, or as a powder (for example, aniseed, carraway seed, fennel, and the like). These ingredients are formed into a paste or dough, which is passed through a kneading machine and afterwards through rollers, when it may be allowed

allowed to stand for (say) about half an hour. The dough is then placed under a stamping machine, which stamps out biscuits in the required shape. These are now passed on a sliding plate (the motion of which may be regulated at will) through an oven, where they remain (say) fifteen or twenty minutes, according as the slide is adjusted, and issue at the other side of the oven as finished biscuits. The heat of the oven should vary with the amount of meat powder used, and ranges from (say) about 248° to 388° Fahrenheit.

I claim as my invention—

1. The preparation of muscular tissue after being freed from all fatty particles, by the addition of 3 per cent. of finely powdered culinary salt whilst the said tissue is exposed to the action of the fumes of sulphide of carbon, and rendering the meat thus prepared absolutely dry by exposure to a temperature of about 212° Fahrenheit, after it has been subjected to a preliminary drying process at a temperature of (say) from about 122° to 140° Fahrenheit, whereby it is rendered capable of being subjected to the higher temperature without losing its flavour.
2. The application of sulphide of carbon, for the purpose of protecting and preserving the meat during the drying process.
3. The conversion of the cubes of desiccated meat, preserved in the manner herein set forth, into meat powder, substantially as hereinbefore described.
4. The preparation and manufacture of compressed meat tablets or sausages, composed either of meat powder employed alone or with an admixture of vegetable matter, fat, or other suitable substances; also, the preparation and manufacture of biscuits and rusks with an admixture of meat powder, substantially as hereinbefore described.
5. As a new article of manufacture, the meat tablets, sausages, biscuits, and rusks, hereinbefore described.

In witness whereof, we, the said Margarethe Meinert and Conrad Warnecke, have to this our specification set our hands and seals, the nineteenth day of April, one thousand eight hundred and seventy-nine.

MARGARETHE MEINERT.
CONRAD WARNECKE.

This is the specification referred to in the annexed Letters of Registration granted to Margarethe Meinert and Conrad Warnecke, this twenty-ninth day of September, A.D. 1879.

AUGUSTUS LOFTUS.

REPORT.

Sir, Sydney, 27 August, 1879.

The application of Messrs. Meinert & Warnecke for Letters of Registration for "Improvements in the preparation of Preserved Meat or compounds of the same with other substances" having been referred to us, we have examined the specification accompanying the same, and have now the honor to report that we see no objection to the issue of Letters of Registration as prayed for.

We have, &c.,
J. SMITH.
CHAS. WATT.

The Principal Under Secretary.

A.D. 1879, 29*th September.* No. 767.

IMPROVED METHOD OF MOULDING IN SAND, AND MACHINERY THEREFOR.

LETTERS OF REGISTRATION to William Aikin and William Whyte Drummond, for an Improved Method of Moulding in Sand, and Machinery therefor.

[Registered on the 30th day of September, 1879, in pursuance of the Act 16 Vic. No. 24.]

BY His Excellency the Right Honorable Sir Augustus William Frederick Spencer Loftus (commonly called Lord Augustus Loftus), Knight Grand Cross of the Most Honorable Order of the Bath, a Member of Her Majesty's Most Honorable Privy Council, Governor and Commander-in-Chief of the Colony of New South Wales and its Dependencies.

TO ALL TO WHOM THESE PRESENTS SHALL COME, greeting:

WHEREAS William Aikin and William Whyte Drummond, both of Louisville, Kentucky, United States of America, foundrymen, have by their Petition humbly represented to me that they are the authors or designers of a certain invention or improvement in manufactures, that is to say, of an invention entitled an "Improved Method of Moulding in Sand, and Machinery therefor," which is more particularly described in the specification, marked A, and the two sheets of drawings, marked B and C respectively, which are hereunto annexed; and that they, the said Petitioners, have deposited with the Honorable the Treasurer of the said Colony of New South Wales the sum of Twenty Pounds sterling, for defraying the expense of granting these Letters of Registration, as required by the Act of Council, sixteenth Victoria, number twenty-four; and have humbly prayed that I would be pleased to grant Letters of Registration, whereby the exclusive enjoyment and advantage of the said invention or improvement might be secured to them for a period of fourteen years: And I, being willing to give encouragement to all inventions and improvements in the arts or manufactures which may be for the public good, and having received a report favourable to the prayer of the said Petition, from competent persons appointed by me to examine and consider the matters stated therein and to report thereon for my information, am pleased, with the advice of the Executive Council, and in exercise of the power and authority given to me by the said Act of Council, to grant, and do by these Letters of Registration grant unto the said William Aikin and William Whyte Drummond, their executors, administrators, and assigns, the exclusive enjoyment and advantage of the said invention or improvement, for and during the term of fourteen years from the date hereof; to have, hold, and exercise unto the said William Aikin and William Whyte Drummond, their executors, administrators, and assigns, the exclusive enjoyment and advantage thereof, for and during and unto the full end and term of fourteen years from the date of these presents next and immediately ensuing, and fully to be complete and ended: Provided always, that if the said William Aikin and William Whyte Drummond shall not, within three days after the granting of these Letters of Registration, register the same in the proper office in the Supreme Court, at Sydney, in the said Colony of New South Wales, then these Letters of Registration, and all advantages whatsoever hereby granted, shall cease and become void.

In witness whereof, I have hereunto set my sign manual, and have caused the present Letters of Registration to be sealed with the seal of the said Colony of New South Wales, at Government House, Sydney, in New South Wales, this twenty-ninth day of September, in the year of our Lord one thousand eight hundred and seventy-nine.

[L.S.] AUGUSTUS LOFTUS.

Improved Method of Moulding in Sand, and Machinery therefor.

A.

SPECIFICATION of WILLIAM AIKIN and WILLIAM WHYTE DRUMMOND, both of Louisville, Kentucky, United States of America, foundrymen, for an invention entitled "An Improved Method of Moulding in Sand, and Machinery therefor."

IN the accompanying drawings, figure 1 is a side elevation; figure 2 is a longitudinal, central, vertical, section; figure 3 is a transverse, central, vertical section; figure 4 is a perspective view of the pattern plate which is attached to the plunger head; figure 5 is a perspective view of the lever which operates the driver of the sand drawer; figure 6 is a plan view showing the shaft and some of the connected mechanism for operating the sand drawer; figure 7 is a plan view of the sand box; figure 8 is an end elevation showing the attachment connecting the sand box and half flask; figure 9 is an elevation showing the sash frame and attachments; figure 10, plan view of lever and spring.

A is a frame of cast iron formed to support the mechanism. B is a driving shaft operated by a pulley, B^1, communicating motion to the friction wheel B^2.

C is an idle wheel swung upon links, C^1, connected to the short arm of the lever D, which has its fulcrum formed by a stud pin on the side of the frame A. By raising the lever D the idle wheel C is brought into engagement with the pinion B^2, and the driver E, which is hung on the end of the shaft E that carries the cam E^2, which operates the plunger head F, which moves in the sand box G, and carries the pattern plate H, to which the patterns are attached. Power being communicated from the driver to the plunger through the frictional contact regulated by hand pressure, the mechanism is not liable to be broken in case of undue resistance.

The pattern plates form a head for the plunger. By making the head of the plunger removable it can be made as a card to support a set of patterns, which may thus very readily be changed. The plunger H^1, which carries the pattern head H is attached to a yoke, H^2, encircling the cam E^2, and is operated by the revolution of the cam.

K is the follower head made in sections and actuated by the yokes K^1, which embrace the cam E^2, and are operated by its revolution, the cam being so formed if desired as to give a slight upward movement to the follower plates K before the pattern head is raised, the object of this being to give a slight preliminary compression to that part of the sand which is outside of the pattern, and this is done in order that the sand in the flask may be uniformly compressed, which would not be the case if the pattern heads and follower heads moved simultaneously and to the same extent, because in the latter case, as the patterns are driven further into the sand, the sand above the patterns would be more compressed than that portion which is at one side of the line of movement of the patterns. So also, in order that the pattern may be withdrawn without breaking away particles of sand adhering at the angle formed by the follower head and pattern, the cam is so formed as to withdraw the pattern head slightly before the sections of the following head are withdrawn from the surface of the sand in the flask; by this means the surface of the sand in the flask is supported by the follower head until the pattern is withdrawn from contact with the sand. The sides of the yoke K^1 are formed by rods, K^3, which pass through guides, L, formed in a cross brace of the frame, and are fittted with spiral springs, K^4, bearing against adjustable nuts screwed on to a thread cut on the rods, so that by raising or lowering the nuts the tension of the springs K may be regulated, determining the resistance of the lower section of the yoke to the action of the spring.

I is a half flask, in which a part of the mould is intended to be formed. The nowel or drag is constructed with notched lugs, I^1, which are intended to receive sliding pins, M, which move in vertical guides, M^1, and are actuated by the point M^2 of a lever pivoted to a shaft, M^3, having its bearings on the main frame, and surrounded by a spiral spring, M^4, which is intended to hold the catch pin m^5 into receptacle m^6 to support the weight of putting the flask on the sliding pin M.

When the cope part of flask (which is constructed with pins which fit into the notched lugs of nowel) is put on machine to be moulded, the pins m are retracted, or when used loose (as is sometimes the case) taken out, the flask pins then fit into the notched lugs on machine.

When the flask is placed on the sand box it is secured in position by projecting the pins M; it is then filled with sand from the sand hopper N, which is mounted on the main frame A, and is stationary. It is mounted on supports, leaving space under it for the sliding sand drawer O, which is open at the bottom as shown at O^1, but rest upon a plate O^2 extending from the front to the back of the hopper, the portion of the bottom outside of the hopper and between it and the edge of the flask being formed by the hinged extension P.

When the sand drawer is drawn back to the position shown in figure 1, sand from the hopper will flow into the drawer and fill that part of it where there is no cover. When the covered portion shown at O^3 figure 1, which is about two-thirds of the entire length of the drawer, comes under the hopper, it serves as a cut off and supports the sand.

When the half-flask is filled with sand the binder plate Q is swung into position on top of the flask. The binder plate is suspended from the arm Q^1, which swings from the standard Q^2 by means of the screw Q^3. A spring catch, Q^4, in the end of the swinging arm Q^1 is made to engage a notch or hole in the standard Q^5, which holds the binder plate firmly in position when swung over the half-flask, the bar Q sustaining the pressure caused by the upward movement of the plunger against the sand in the sand box and half-flask.

The capacity of the sand box G and flask is such when patterns are set that they will hold just the quantity of sand necessary to supply the reduction in compressor to fill the half-flask after the mould is formed, which quantity is furnished it by the sand drawer O.

Before the box is filled the sprue or gate stick R is placed on the follower board K, which has a raised part, K^5 (figure 7), which forms the branches of the gate leading from the sprue to pattern. There are holes formed in the binder plate through which the sprue or gate stick passes, as the sand is compressed by the raising of the plungers. The stick is then removed and the half-flask is finished. In filling the lower section of the flask no sprue stick is used.

The following is the mechanism devised for operating the sand drawer:—B^3 is a pulley on the driving shaft B; S is a yoke, formed as shown, and which embraces the pulley B^3. This yoke carries an arm, S^1, through which passes the eccentric shaft T, the journals T^1 of which are eccentric, as clearly shown in

in figure 6. The shaft and arm S^1 are coupled by means of an adjustable clutch collar, T^2, fastened to the shaft T by a set screw, and engaging a point on the hub where S^1 receives the shaft, as shown at S^2 in figure 6. The object of this arrangement is to give to the arm a certain amount of play on the shaft T sufficient to permit the throw of the free end of the arm S^1 when the shaft is stationary. The shaft T receives a partial rotation by means of an arm, T^3, to which is fastened the horizontal adjusting rod T^4. By moving the rod T^4 the yoke S may be raised or lowered so as to bring it into frictional contact with the surface of the constantly rotating pulley B^3. Instead of producing this motion by frictional contact, B^3 may be a spur pinion, and corresponding teeth formed on the edge of the slot in yoke S. The operator, by pushing the rod into the position shown in figure 1, brings the lower side of the yoke into contact with the under side of the pulley B^3, and causes the yoke to move into the position shown in figure 2; the arm S^1 through the connecting rod U, which is pivoted to the upper end of arm S^1 and outer end of the sliding drawer O, draws the drawer forward, carrying the sand from the hopper and dropping it into the half-flask and sand box. The operator then draws the arm out so as to reverse the arm T^3, shifting the eccentric shaft T and depressing the yoke S, so that its upper surface shall bear on the top of the pulley B^3, thereby causing the oscillation of the arm S^1, drawing the sand drawer O back into the position shown in figure 1, when it again receives its charge of sand.

Instead of having the bottom of the sliding sand drawer open, as shown, it may be made with a sliding bottom, which is withdrawn to permit the sand to drop as it passes over the open top of the half-flask.

Instead of having the sand box stationary and the sand compressed therein by the forward movement of the followers or templet plate, the sand box may receive a reciprocating motion by means of rods and cams working on the same principle as hereinbefore described, to draw the sand box down on the stationary follower, it being a mere reversal of the operation hereinbefore described. In the latter case a slight motion only need be imparted by a cam to the pattern heads, sufficient to draw the pattern far enough from the mould in the sand.

We have shown, in figures 11, 12, 13, and 14, a form of machine working upon the same principle as the foregoing, but so varied in construction that when one mould has been formed in a half-flask the operative parts may be turned over, bringing the flask below the machine, when another half-flask being placed on the box (which in this case is open at both ends top and bottom) and filled with sand as before, another mould may be formed by the upward movement of another pattern and follower, the follower plates and half patterns being so connected that the same movement of the parts which raises the follower and pattern to form the mould in the upper flask will serve to withdraw the pattern and follower from the lower flask, which may then be removed, the box again reversed, and the operation repeated as before.

In the annexed drawing, making a part of this specification, figure 11 is a transverse, vertical section of the machine; figure 12 is a longitudinal vertical section of the same; figure 13 is a horizontal section of the same; figure 14 is a plan view of the follower.

The same letters are employed in all these figures in the indication of identical parts.

A is a frame which supports the operative mechanism, supported by trunnions in boxes on the frame A. B is a box designed to serve as a guide for the double pattern and follower heads, also to contain the amount of sand requisite to supply the reduction by compression and to support the half-flasks in which the moulds are formed. It is therefore open at both ends, and of sufficient length to contain a pattern and follower head in each end and the necessary intermediate operative mechanism for controlling the movements of the plungers. The general moulding mechanism, as well as the devices for attaching the half-flasks, being similar to those heretofore employed in a single machine, need not be particularly described herein.

The binder-plate A^1 is attached to a swinging arm, a^2, which swivels on a pin fastened to the box B on one side, the free end swinging under a permanent catch attached to said box on the opposite side.

E is a screw lever, toggle-joint, or equivalent device, passing through the swinging arm A^2, and by means of which the binder-plate A^1 may be forced against the end of the half-flask to sustain the pressure of the sand when compressed by the action of plungers. The rods FF hold the binder-plate in its proper position. They are made to slide in the arm A^2, thus allowing the plate to be either raised or lowered by the action of the screw E.

The double follower and pattern heads are formed in sections B^1 and B^3, the former having the patterns fitted and fastened to both ends.

The patterns shown in the drawing are the halves of a globe valve, but any other patterns may be used the form of which is adapted to make a mould, or part of one, by compression in the sand.

The forms of the pattern heads B^1 B^1 being adapted to the outlines of the patterns, they are fitted with thickness pieces the exact shape of the largest part of the pattern, and make, with the pattern plates, a perfect match. The sections B^3 B^3 are formed to close the spaces between the latter and the sides of the box. These sections B^1 B^1 and B^3 form a double head or plunger for compressing the sand in the flask, being moved simultaneously for the compression of the sand in forming the mould. The sections B^3 B^3 are attached to cross-head B^4 arranged so as to support them independently of the supports of sections B^1 B^1. They are actuated by the eccentric D, working between the double heads and turning with the shaft D^2, which is operated by a wheel C on the outside of the frame, and is furnished with a pawl and ratchet, C^1, which prevents the revolution of the shaft and eccentric except in one direction. The operation of the eccentric on the double plungers is such that an opposite movement is communicated to the sections of the plungers on opposite sides of the eccentric. Sections B^1 B^1, carrying the patterns, are attached to an independent cross-head, B^5, so as to permit the patterns to be withdrawn from the sand after compression in the flask, while the sections B^3 B^3 of the follower remain in position to protect the edges of the moulded sand.

B^2 B^2 are the trunnions attached to the box B revolving in the bearings G G attached to the frame A. A spring catch, H, is attached to the frame, and made to engage the box and hold it stationary until it is detached, in order to reverse the position of the box.

E^1 E^1 are set screws for regulating the position of the cross-heads B^4 supporting the sections B^3.

The operation of the machine is as follows:—The proper patterns having been attached to each end of the double heads B^1, a half-flask is placed on top of the box B and filled loosely with sand to the level of the top. The binder-plate A^1 is then swung over the flask and tightened on it by the screw E or equivalent device.

device. The wheel C is then turned, and the eccentric lifts the plungers, forcing the patterns into the damp sand in the flask, and forms a mould therein by compression. The spring-catch H is then withdrawn, and the box with the flask and sand, in its then compressed condition, is turned in the trunnions so as to reverse its position. Another half-flask is then placed on the box and filled with sand, its binder-plate is attached and the wheel C again turned, so as to lift the plunger and form the mould therein by compression in the same manner as before. This movement of the eccentric lifts the patterns out of the lower half-flask, thus completing the mould in the half-flask first operated upon. The screw E, or other device supporting the lower flask, is then released, the flask descending with the binder-plate, freeing it from the box. The binder-plate and flask resting on it are then swung to one side on the pivot of the arm A^2, and the flask is then removed. The spring-catch H is then released, the box reversed, and the operation repeated, thus forming successively the half-moulds, which are afterwards connected, and the operation of casting performed as in other cases.

Claims :—

First—As an improvement in the art of moulding in sand, forming moulds by compression, by first filling loosely the half-flask placed over a box and movable follower, then closing the flask and afterwards compressing all the sand in the flask about the pattern, by the uniform movement of the follower and pattern towards the flask, or of the flask towards the pattern and follower, then, when the sand is compressed, withdrawing the pattern and then separating the sand from the follower plates, substantially as set forth.

Second—As a further improvement in the art of moulding in sand by mechanical compression, first compressing the sand around the pattern by the movement of the follower or templet plate, only then compressing it uniformly by the simultaneous movement of the pattern and follower or templet plate, and then withdrawing the pattern to complete the mould, substantially as set forth.

Third—The combination of the cam E^2 with the reciprocating pattern head F H and sectional follower K, independently actuated so that they may be made to move alternately and together, substantially as set forth.

Fourth—In combination with the sand box and flask the reciprocating sand drawer for transferring the sand from the hopper to the flask in uniform charges, substantially as set forth.

Fifth—In combination with the movable followers K and binder-plate Q, constructed with holes therein, the sprue or gate-stick R, substantially as set forth.

Sixth—In combination with the flasks L, the lugs I^1, and sliding lock pins M, substantially as set forth.

Seventh—In combination with the driving shaft B and wheel B^3, the slotted yoke L, eccentric shaft T, oscillating arm S, and connecting rod U, for shifting the sliding sand drawer O, substantially as set forth.

Eighth—In a machine for moulding in sand, in combination with the plunger which carries the pattern and driver, an intermediate idle wheel, bearing by adjustable pressure on the driver and driven pinions to move the plunger by friction with a regulated force, substantially as set forth.

Ninth—In a double-acting machine, such as shown in figures 11, 12, 13, and 14, the combination of the box B and double plungers, for forming a mould by compression of sand about the patterns in a half-flask on one end of the box at the same time that the mould is being completed in another half-flask on the opposite end of the box by the withdrawal of the patterns and follower, substantially as set forth.

Tenth—The combination of the wheel C (figures 11, 12, 13, and 14), shaft D^2, eccentric D, and double plunger sections B^1 B^3, arranged so that one pattern section shall be drawn from the sand at the same time that the other pattern section of the double plunger is forcing the sand into another flask to form the mould by compression, substantially as set forth.

Eleventh—In a machine for moulding in sand, such as shown in figures 11, 12, 13, and 14, the sand box B hung, substantially as set forth, so as to permit the box to be reversed and the mould made partly in one half-flask and partly in the other half-flask, substantially as fet forth.

In witness whereof, we, the said William Aikin and William Whyte Drummond, have hereto set our hands and seals, this fourth day of June, 1879.

Witness—
WM. T. DRUMMOND.

WILLIAM AIKIN.
WILLIAM WHYTE DRUMMOND.

This is the specification, marked A, referred to in the annexed Letters of Registration granted to William Aikin and William Whyte Drummond, this twenty-ninth day of September, A.D. 1879.

AUGUSTUS LOFTUS.

REPORT.

Sir, ——— Sydney, 29 August, 1879.

We do ourselves the honor to report, in reply to your blank cover communication of the 22nd instant, No. 6,388, transmitting Messrs. William Aikin and William Whyte Drummond's application for the registration of "An improved Method of Moulding in Sand, and Machinery therefor," that we see no objection to the registration being granted, in accordance with Messrs. Aikin and Drummond's Petition, specification, drawings, and claim.

We have, &c.,
GOTHER K. MANN.
E. C. CRACKNELL.

The Principal Under Secretary.

[Drawing—two sheets.]

Fig 1.

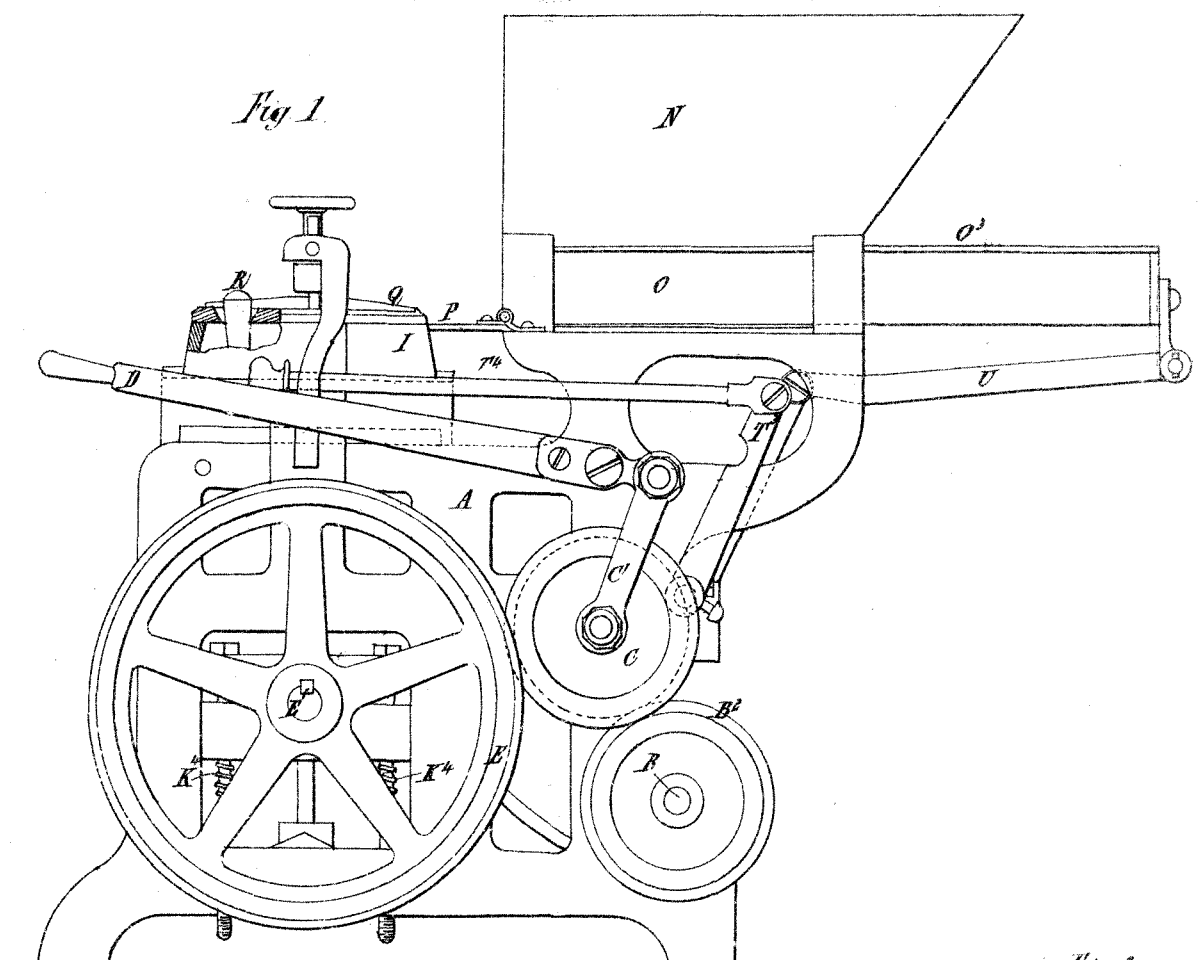

Fig 2.

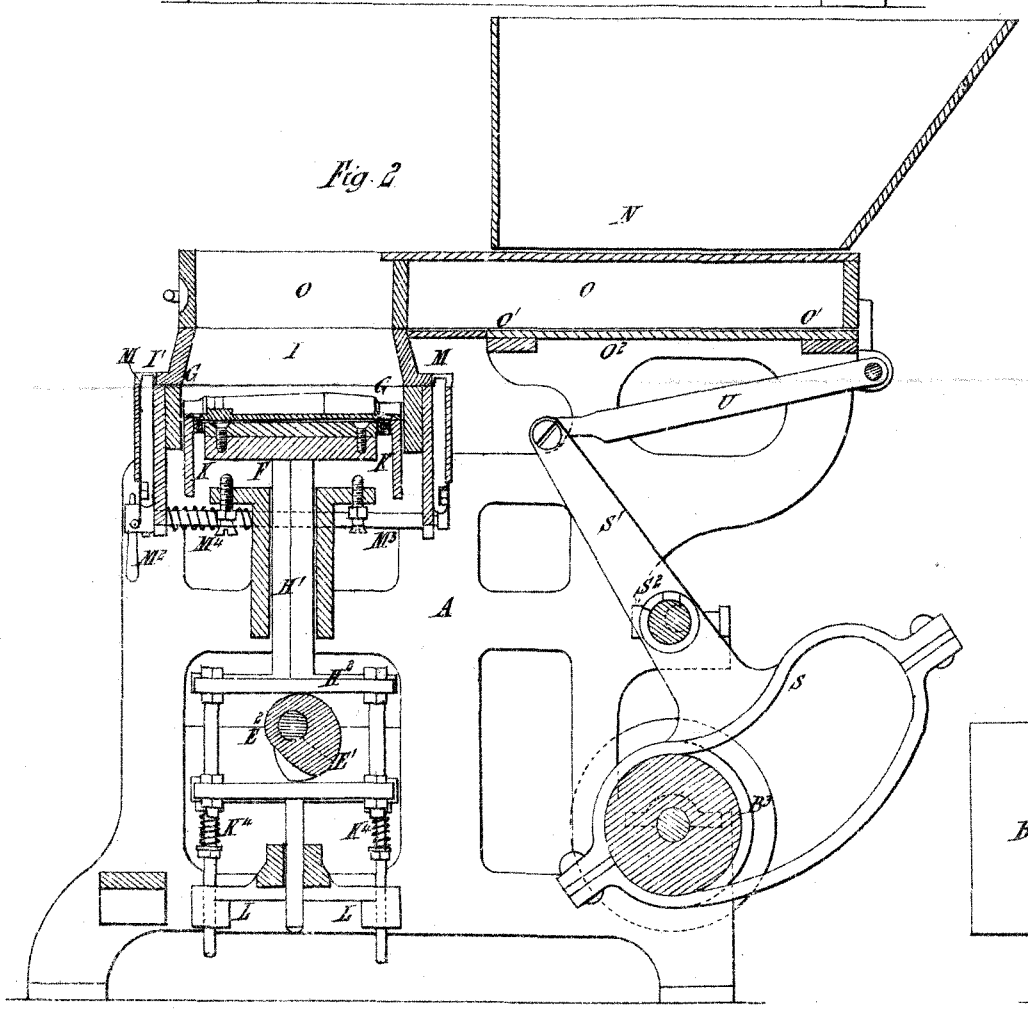

Fig 3.

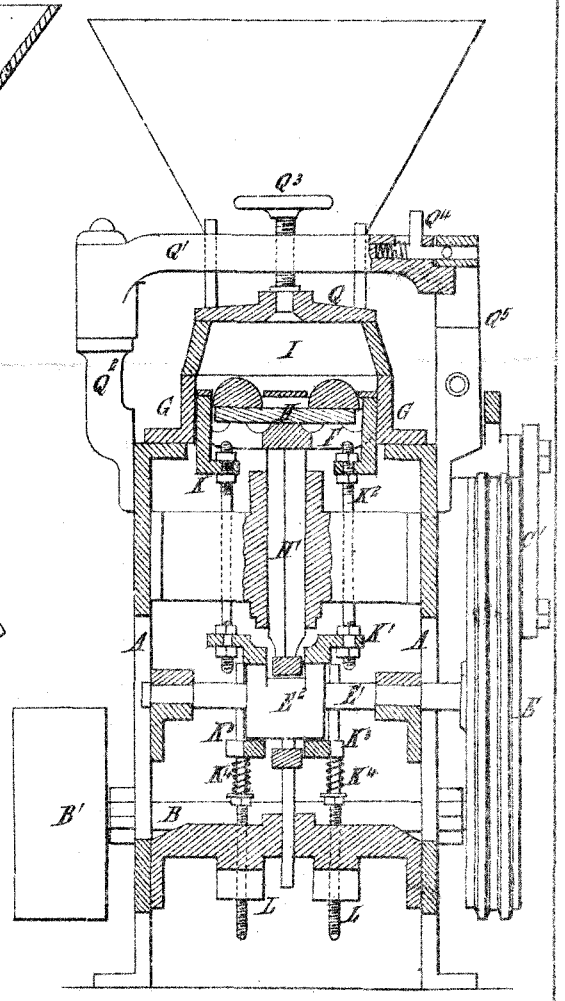

Fig 4.

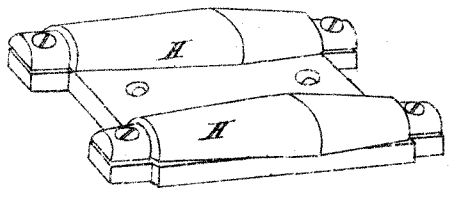

Fig 5

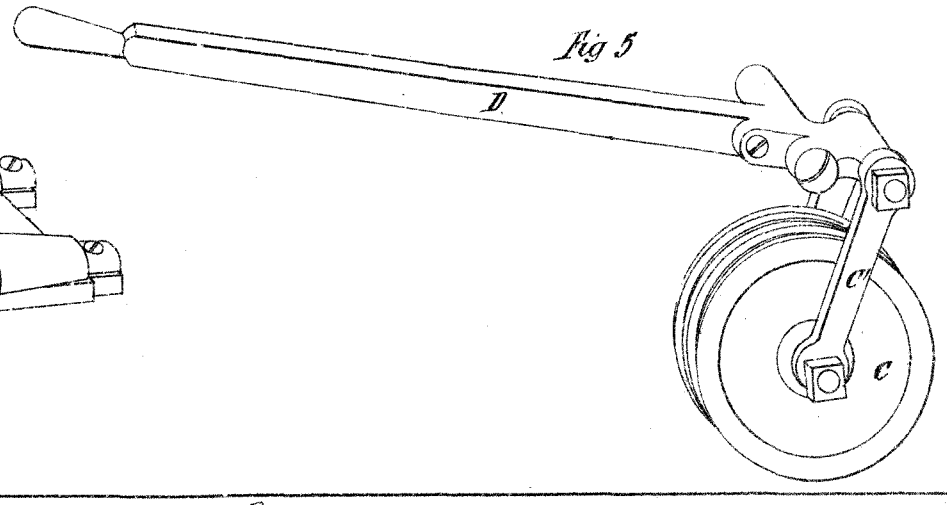

This is the Sheet of Drawings marked "B" referred to in the annexed Letters Registration granted to William Tikin and William Whyte Drummond this twenty-ninth day of September A.D. 1879.

(Sig: 198-)

"Augustus Loftus"

PHOTO-LITHOGRAPHED AT THE GOVT. PRINTING OFFICE,
SYDNEY, NEW SOUTH WALES.

Fig. 6.

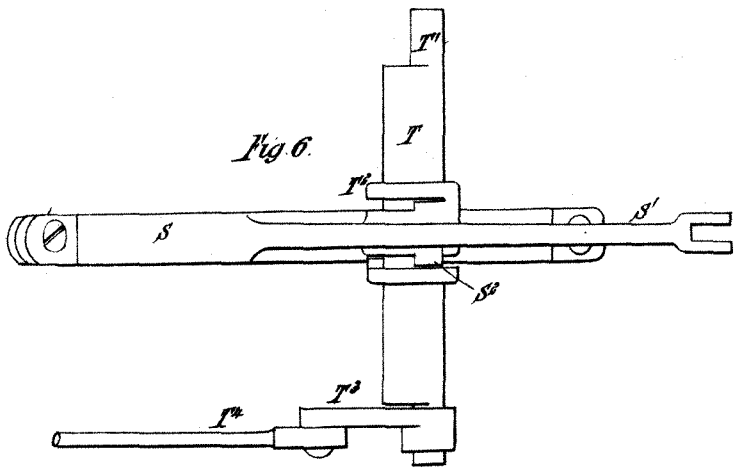

Fig. 7.

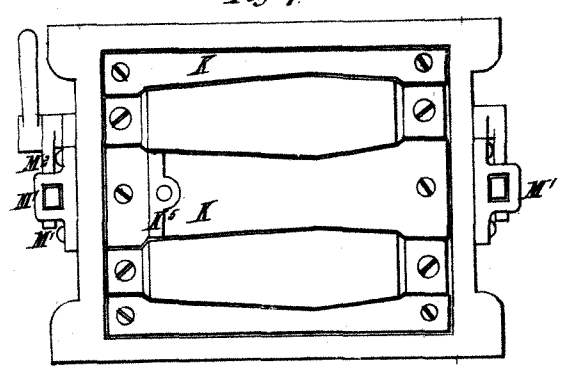

Fig. 8.

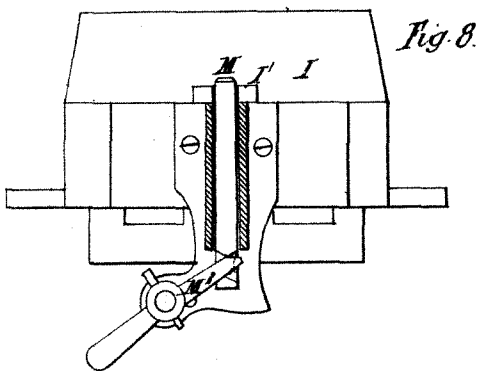

Fig. 9.

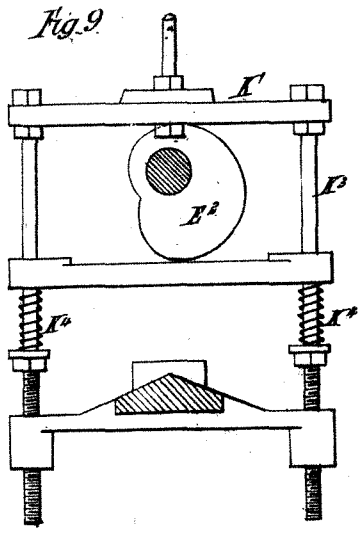

Fig. 10.

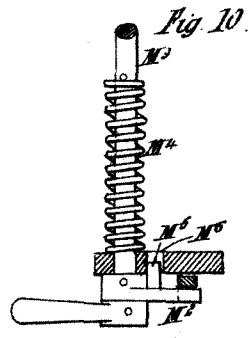

Fig. 11.

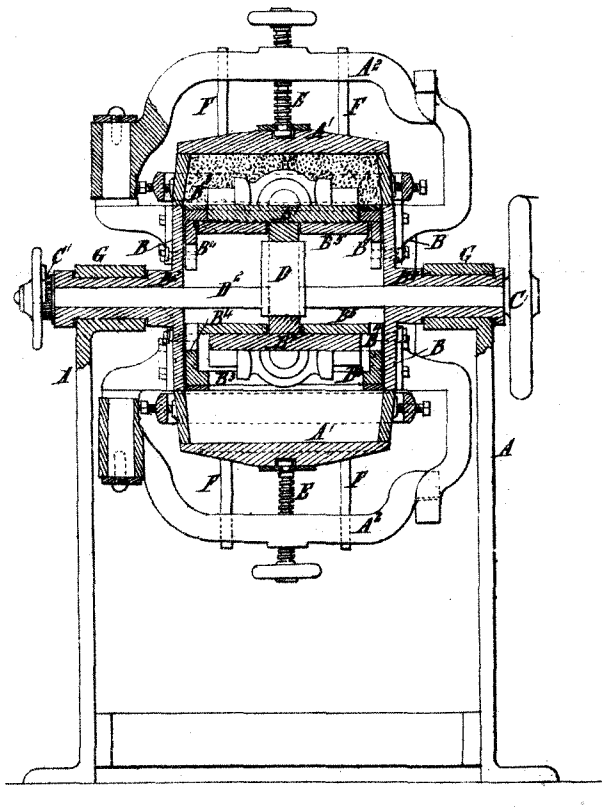

Fig. 12.

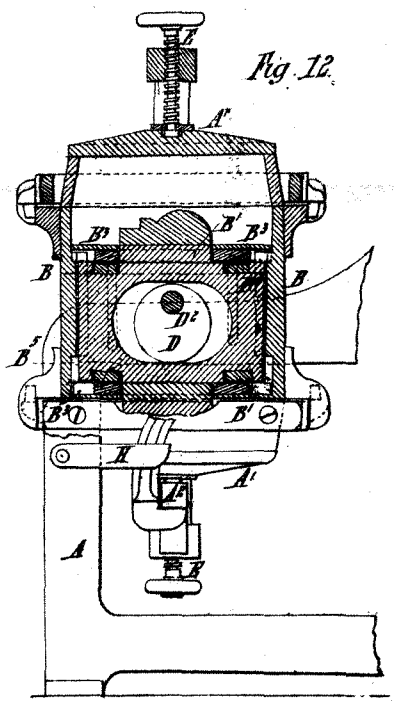

Fig. 13.

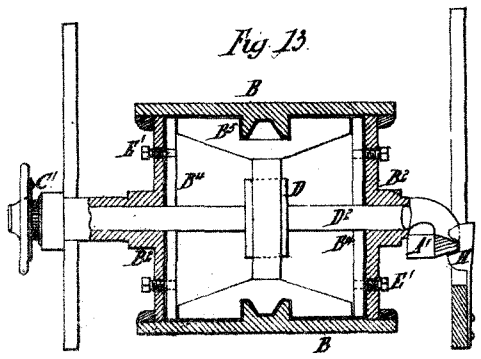

Fig. 14

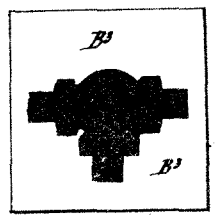

This is the Sheet of Drawings marked "C" referred to in the annexed Letters of Registration granted to William Aitpin and William Wylie Drummond this twenty-ninth day of September 1879.

(Sig: 198-)

"Augustus Loftus"

PHOTO-LITHOGRAPHED AT THE GOVT. PRINTING OFFICE, SYDNEY, NEW SOUTH WALES.

A.D. 1879, 29*th September*. No. 768.

IMPROVEMENTS IN RAILWAY BRAKES, &c.

LETTERS OF REGISTRATION to George Westinghouse, junior, for an improved system of Apparatus for regulating and increasing the efficiency of Brakes for Railway Trains, and for controlling and indicating the speed of locomotive Wheels.

[Registered on the 30th day of September, 1879, in pursuance of the Act 16 Vic. No. 24.]

BY His Excellency the Right Honorable Sir Augustus William Frederick Spencer Loftus (commonly called Lord Augustus Loftus), Knight Grand Cross of the Most Honorable Order of the Bath, a Member of Her Majesty's Most Honorable Privy Council, Governor and Commander-in-Chief of the Colony of New South Wales and its Dependencies.

TO ALL TO WHOM THESE PRESENTS SHALL COME, greeting:

WHEREAS George Westinghouse, junior, of No. 20, Southampton Buildings, Chancery-lane, in the county of Middlesex, England, engineer, hath by his Petition humbly represented to me that he is the author or designer of a certain invention or improvement in manufactures, that is to say, of an invention entitled an "Improved system of Apparatus for regulating and increasing the efficiency of Brakes for Railway Trains, and for controlling and indicating the speed of locomotive Wheels," which is more particularly described in the specification, marked A, and the six sheets of drawings, marked B, C, D, E, F, and G, respectively, which are hereunto annexed; and that he, the said Petitioner, hath deposited with the Honorable the Treasurer of the said Colony of New South Wales the sum of Twenty Pounds sterling, for defraying the expense of granting these Letters of Registration, as required by the Act of Council, sixteenth Victoria, number twenty-four; and hath humbly prayed that I would be pleased to grant Letters of Registration, whereby the exclusive enjoyment and advantage of the said invention or improvement might be secured to him for a period of fourteen years: And I, being willing to give encouragement to all inventions and improvements in the arts or manufactures which may be for the public good, and having received a report favourable to the prayer of the said Petition, from competent persons appointed by me to examine and consider the matters stated therein and to report thereon for my information, am pleased, with the advice of the Executive Council, and in exercise of the power and authority given to me by the said Act of Council, to grant, and do by these Letters of Registration grant unto the said George Westinghouse, junior, his executors, administrators, and assigns, the exclusive enjoyment and advantage of the said invention or improvement, for and during the term of fourteen years from the date hereof; to have, hold, and exercise unto the said George Westinghouse, junior, his executors, administrators, and assigns, the exclusive enjoyment and advantage thereof, for and during and unto the full end and term of fourteen years from the date of these presents next and immediately ensuing, and fully to be complete and ended: Provided always, that if the said George Westinghouse, junior, shall not, within three days after the granting of these Letters of Registration, register the same in the proper office in the Supreme Court, at Sydney, in the said Colony of New South Wales, then these Letters of Registration, and all advantages whatsoever hereby granted, shall cease and become void.

In witness whereof, I have hereunto set my sign manual, and have caused the present Letters of Registration to be sealed with the seal of the said Colony of New South Wales, at Government House, Sydney, in New South Wales, this twenty-ninth day of September, in the year of our Lord one thousand eight hundred and seventy-nine.

[L.S.] AUGUSTUS LOFTUS.

Improvements in Railway Brakes, &c.

A.

SPECIFICATION of GEORGE WESTINGHOUSE, Junior, of No. 20, Southampton Buildings, Chancery-lane, in the county of Middlesex, England, engineer, for an invention entitled "An improved system of Apparatus for regulating and increasing the efficiency of Brakes for Railway Trains, and for controlling and indicating the speed of the locomotive Wheels."

In patents formerly granted to me I described systems of working the brakes of railway trains by fluid pressure communicated throughout the train by suitable pipes, and particularly a system according to which air compressed by a pump into a general reservoir on the locomotive supplies auxiliary reservoirs on the several brake carriages of the train, and the store of power retained in these reservoirs is employed to act in cylinders upon pistons connected to the brake levers, so as simultaneously to apply the several sets of brakes when desired or in case of accident happening to the train.

My present invention relates chiefly to certain modifications of and additions to the apparatus employed for this purpose, so as to render it more effective and regulate its action, thus rendering the system of operating therewith more complete and certain. It is to be understood, however, that some of the arrangements herein described are applicable to railway brakes generally worked otherwise than by fluid pressure. I will describe these modifications and additions, referring to the accompanying drawings. Fig. 1 (sheet III) represents a vertical section of an escape valve which I employ for regulating the pressure of the brake blocks on the wheels in the following manner:—The valve box has four apertures. Two of them, A and B, communicate with the brake cylinder, the valve box being introduced into the branch pipe by which the cylinder is supplied. The third aperture, C, opening to the outer air, is fitted with a valve, to the stem of which is attached a flexible diaphragm, *c*, secured at its edge to the valve box. The valve has projecting from it a short rod which works as a guide in the aperture C, and this rod is notched or flattened on one side as shown at *x*, so as to give passage through the aperture, varying in area as the valve moves. The fourth aperture D communicates with a pipe containing fluid under pressure, which is regulated by a centrifugal governor. The valve, with its diaphragm *c*, is pressed down by a spring, *d*, adjusted to a pressure less than that required in the brake cylinder, and it is also pressed down by the fluid in the pipe with which D communicates. As long as the pressure of the spring *d*, along with that in D, exceeds the pressure in the brake cylinder, the aperture C remains closed by the valve; but when the pressure in the brake cylinder exceeds that due to the spring and the fluid in D acting along with it, then the diaphragm *c* is forced upwards, raising the valve and so opening the aperture C, and allowing air to escape until the pressure in the brake cylinder becomes reduced to balance the combined pressure of the spring *d* and the fluid in the branch D. The pressure of the fluid in D is varied during the action of the brake, so as to be greatest when the wheels are moving rapidly and to decrease as they revolve more slowly, it having been found that the brake blocks exert greater friction on wheels when they are slowly revolving than when they are rapidly revolving, and consequently less pressure is required in the brake cylinder as the train is coming to rest. For the purpose of varying the pressure in D in accordance with the speed of the train, I employ either of two methods. According to the one method, the branches D of the several escape valves throughout the train are all in communication with a pipe supplied by a small orifice with compressed air from the reservoir on the locomotive, and provided with an escape valve which is worked by a centrifugal governor driven by one of the running axles. When the train is moving rapidly, the governor, revolving rapidly, keeps the escape valve of the pipe closed, so that considerable pressure is maintained in the pipe; but as the train moves more slowly, the governor also becoming retarded, allows the escape valve of the pipe to open more or less, and thus the pressure in the pipe, and consequently that acting on the diaphragms *c*, becomes reduced. According to another method, instead of regulating the pressure in D by means of a pipe communicating throughout the train and having the pressure in it controlled by one governor, I combine the escape valve of each brake cylinder with a local governor driven from one of the running axles of the brake carriage itself, according to the arrangements shown by figs. 2, 3, 4, and 5. Of these, fig. 2 is a side view, fig. 3 a plan, and fig. 4 an end view of part of the underframing and wheel of a brake carriage with the brake governor applied to it, and fig. 5 is a section to an enlarged scale of the governor and the escape valve worked by it. The brake lever A is worked by the rod *a* connected in the usual way to the piston of the brake cylinder, from which cylinder there is communication by a pipe B and tubular link C to the interior of the escape valve under its diaphragm *c*. The pipe B is bent into one or more coils at *b*, to allow of a little flexure when the link C is moved. To the lower end of the link C is fixed a horizontal axle, E, forming a bearing on which the governor revolves. This governor consists of a hollow casing, F, having on its periphery a ring, *f*, of caoutchouc, leather, wood, or other suitable material of like nature, and having mounted within it two bent levers, G, with weights, *g*, at their inner ends. The short arms of the levers G bear on the end of a central sliding rod, H, which is prevented from revolving by a stud, *h*, projecting into a slot of the rod. The inner end of the rod H bears against the stem of the escape valve, which is similar in construction and arrangement to that described above with reference to fig. 1, having an opening at X to the outer air. The link C with the governor is drawn towards the carriage axle I by a spring, *i*, but so long as the brakes are off, as shown in fig. 2, the periphery *f* of the governor casing is kept away from contact with the axle I by a hooked bar, *a'*, which is fixed to the rod *a* and is bent partly round the link C. When the rod *a* advances so as to put on the brakes, the link C is permitted to be drawn by the spring *i* till the periphery *f* of the governor drum is brought in contact with the axle I, and thereby caused to revolve. While it revolves rapidly its weights, *g*, tending by centrifugal force outwards, cause the rod H and the stem of the escape valve to be pressed forwards, closing the escape aperture X, but when, on the train moving more slowly, the governor is driven with less velocity, the pressure acting under the diaphragm *c* overcomes the centrifugal force of the governor so as to unseat the valve and allow escape by the aperture X, thereby causing the pressure acting in the brake cylinder to be reduced, and consequently diminishing the pressure of the brake blocks upon the wheels as they revolve more slowly. Instead of employing a centrifugal governor to vary the pressure of the brake blocks according as the speed of the train varies, I render the variation of pressure automatic by applying the drag on the brake blocks themselves to govern the force with which the blocks are pressed against the wheels by the arrangements shown in figs. 6, 7, and 8.

Fig.

Fig. 6 is a side elevation, and fig. 7 is a plan of part of the underframing and wheel of a brake carriage with one of the brake blocks to which the arrangement of automatic regulation is applied, and fig. 8 is a longitudinal section to an enlarged scale of the regulating valve and the apparatus for working it. The brake block A is suspended by a link, B, from one end of a lever, C, the other end of which is linked to one arm of a three-armed lever, D. The ends of the other two arms of this lever catch in recesses of a block, E, to which is attached an escape valve box, and the middle of the lever bears against a spring stem, F, in line with the stem of the valve G. The valve box is connected by a branch pipe from H to the brake cylinder. When the brakes are applied by pressure acting in the brake cylinder, the valve G being closed, the wheel, by the friction of the block upon it, tends to drag the block along with it and so to move the lever C upwards or downwards according as the wheel is revolving in the one direction or the other. This action communicated through the link to the three-armed lever D tends to make it move on the end of the one or the other of its vertical arms as on a fulcrum, and to press forwards the stem F in opposition to the spring. When the dragging force on the brake block thus transmitted to F is sufficient to overcome the pressure of the spring and that on the valve G, the valve is opened and air escapes from the brake cylinder, reducing the pressure therein, and consequently reducing the force with which the brake block is pressed against the wheel. When this force is sufficiently reduced and the drag of the block reduced with it, the valve G again closes. The force resisting the drag of the brake block may in part be adjusted by the more or less compression of the spring surrounding the stem F. Another portion of the force depends on the pressure with which the valve G is held to its seat, which consists partly of the pressure of a light spring and partly of the pressure of the fluid in the brake cylinder. The latter portion of the pressure may be varied by charging the communicating pipe to a greater or less pressure, and thus the total force keeping the valve closed may be varied to suit different degrees of slipperiness of the rails, the pressure of the brake blocks being thus retained under that which will cause the wheels to slip along the rails. The action of this apparatus may be rendered more effective with diminished waste of compressed air by modifying the valve box as shown in fig. 8*a* and placing it in the pipe communicating from the auxiliary reservoir to the brake cylinder. In this case the stem of the valve G carries on it a piston, *g*, which fits a cylindrical cavity communicating by a branch, K, with the branch pipe from the auxiliary reservoir. While the valve G remains closed, the compressed air from the auxiliary reservoir passes the piston *g* and through the passages H to the brake cylinder; but when the drag of the brake blocks exerts sufficient pressure on the valve G to open it, the piston *g*, advancing into the cavity beyond it, stops the supply of air from the auxiliary reservoir to the brake cylinder, whilst air escapes from the latter past the valve G.

With reference to the escape valve described at fig. 1, it is to be observed that this can be employed without the connection at D to a governor, for the purpose of preventing the brake blocks from exerting more than a certain maximum pressure. The valve casing is for this purpose closed at D with a screw cap, by means of which the pressure of the spring can be regulated so as to keep the valve closed until a certain pressure is attained in the pipe A B connecting the conduit pipe with the brake cylinder, so that when this pressure in the pipes is exceeded the escape valve will open and cause the escape of fluid pressure until the pressure is again reduced.

Brake blocks made of iron or steel have, when they are new, a surface presenting a hard scale, such that unless the blocks are applied with extreme pressure to the wheels the necessary friction for retarding and stopping the train is not obtained. In order to avoid this difficulty I cast such blocks with a surface roughened or serrated, so as to present a number of projecting parts to the frictional wear, as shown at A, figs. 9 and 10, which represent respectively a side view and face view of a brake block. The hard scale on these protuberances becomes shortly worn off, exposing the softer metal below, which under moderate pressure takes sufficient bite on the periphery of the wheel. Even after the hard surface scale of the brake block has been worn off, considerable variations occur in the frictional hold of the metal on the wheel, owing to portions of the metal being rubbed off the surface in the form of fine powder or dust, which acts more or less as a lubricant to the rubbing surfaces. In order to provide against this result I make the brake block with transverse slots or grooves such as those shown at B in figs. 9, 10, and 11, at intervals apart, sunk to a depth exceeding the extent of wear which the block has to undergo. The metal dust or powder, instead of remaining as a kind of lubricant between the rubbing surfaces, is carried by the movement of the wheel over the intervals between the grooves, in which it is deposited and from which it is shaken or can from time to time be cleared out. The block may be made with these grooves alone, as shown in the face view, fig. 11, or with both these and the protuberances above mentioned, as shown in figs. 9 and 10.

For connecting from carriage to carriage of a train the pipe which communicates the fluid pressure that operates the brakes, I employ a coupling constructed as shown in figs. 12, 13, 14, and 15. Of these, fig. 12 is a vertical section, fig. 13 a plan, fig. 14 a front view of half a coupling, and fig. 15 a side view partly in section of the valve fitted in the half coupling. The pipe of each carriage has attached to it a piece of flexible tube, A, which is secured to a nozzle of the coupling, and this nozzle is inclined to the axis of the coupling, so that when the two half-couplings are connected the flexible pipe hangs in an easy curve without being strained by a sharp bend over one edge of the nozzle. Each half-coupling is provided with a pair of side ears, B, one of them having a hole bored through it, and the other having riveted in it a taper-ended pin, C, with a side notch, *c*. As this pin is in every case fixed at one side, say the left-hand side of the half-coupling, while the hole is at the opposite side, the half-coupling on every carriage, whichever end of it be presented towards the next carriage, is fitted to meet and connect with the half-coupling on the next carriage, the pin of the one half coupling being thrust through the hole of the other. When the two half-couplings are pressed together, a spring, D, on each catches into the notch *c* of the pin of the other, and thus the two halves are held together, but the notches *c* and the ends of the springs D, being rounded, disengage themselves under a moderate strain, allowing the two halves to be pulled asunder. Each half-coupling is provided with an elastic lip, E, of caoutchouc, or such-like material, which prevents leakage when the two half-couplings are connected. When two carriages of a train are separated or at the end of the pipe of the last carriage, it is necessary that the pipe should be closed. For this purpose I provide in each half-coupling a valve, which consists of a hemispherical grating, F, that can turn on its

axis

axis on the face of a fixed hemispherical grating, G. A spring, *g*, acting on the axis of F, causes it to turn till it comes against a fixed stop pin, *f*, in which position the bars of the valve F cover the apertures between the bars of G, the mouth of the coupling being thus closed. In order that it may be opened when the two half-couplings are connected, I attach to the revolving grating F two studs, H, having their ends sloped to an inclination, so that when the two half-couplings are pressed together the inclined faces of the studs of each acting on those of the other, cause both the gratings F to turn partly round in opposition to the springs *g* until the bars of F coincide with those of G, leaving the apertures between the bars open, and thus giving a free passage from the one length of pipe to the other. On again disconnecting the coupling, the springs *g* cause the gratings F to turn back, closing the mouths of the pipes. This construction of coupling and self-closing valve is obviously applicable whether the air in the communicating pipe be compressed or rarified, or whether any fluid other than air, such as water or steam, be employed for communicating pressure throughout the train for working the brakes.

Figs. 22, 23, and 24 of the accompanying drawings show respectively a section, front view, and plan of a modified construction of the coupling above described, in which the two half-couplings are secured together by providing each half with a hooked-shape projection, B, at bottom on one side and a corresponding hole, C, on the other side, so that on inserting the hook of the one half into the hole of the other, as shown at fig. 22, they are effectually coupled, the weight of the coupling when hanging down with the hose being sufficient to keep the upper parts of the two halves pressed together air-tight. The other parts of the coupling are of precisely the same construction as before described, and are designated by the same letters of reference.

Figs. 25 and 26 show respectively a longitudinal section and plan of a different form of coupling such as I have described in my previous patents, provided with means for automatically opening and closing the orifices by the act of coupling and uncoupling. In this coupling each half has a side opening surrounded by a caoutchouc lip, A, which lips are pressed together by a projection, B, on the one half, fitting into a groove, C, on the other half as shown, the two halves being first brought together in an angular position as indicated by the dotted line X, fig. 26, and then turned upon each other round the centre of the opening until they are in a straight line, as shown, whereby the projection of the one coupling is brought underneath the groove of the other. On the back of the caoutchouc lip A is a plate, D, having passages through it and serving as seat to a disc valve, E, also having openings through it, so that when turned into one position it is open, while in another position it closes the opening of the coupling On the back of the valve is a stud which engages between projections on a disc, F, having a stem, F^1, passing air-tight through the back of the coupling, outside of which a forked arm, G, is fixed on the stem. The fork of this arm engages with a stud, H, on the other half-coupling, so that when the two halves are turned upon each other into the beforementioned angular position for uncoupling, the stud H turns the arm G and with it the valve E, so that the latter closes the opening of the pipe before the half-couplings separate. In like manner, when the two half-couplings are again brought into the angular position for coupling up the pipe, the forked arm G is again made to engage with the stud H, so that on turning the two halves into the straight position the valve E is again turned back into the open position. If while in this position the half-couplings are pulled forcibly apart by the accidental separation of the carriages, the valves remain open, and by the escape of fluid pressure from the pipes through them the brakes are applied as described in my previous patents. The arms G are provided with wings, G^1, so formed as to prevent the two half-couplings being coupled together in any other position than that in which the stud engages with the fork, and they are also provided with stops, G^2, for preventing the halves being turned beyond a certain angular position.

Figs. 25* and 26* show a section and plan of a modified construction of the above arrangement, in which, instead of making the arm G forked so as to engage with a pin on the other half-coupling, the arm has pins, G^2, projecting downwards so as to embrace the sides of the other half-coupling, so that when this is turned for coupling up or uncoupling as before described it will turn the arm G, and consequently the value of the other half-coupling.

The valve is pressed down on its seat and the disc F is pressed air-tight against the casing by means of a spring, I, interposed between them. It will be evident that in place of the valve E an ordinary stop-cock might be fitted in the nozzle of each half-coupling, the plug of which cock would have an arm carrying a pin such as H engaging with a forked arm such as G fixed rigidly to the other half-coupling, as indicated by dotted lines at Z, fig. 26, so that on turning the two halves as before described the arm G will turn the plug of the cock in one direction or the other.

Figs. 27, 28, and 29 show respectively a longitudinal section, a cross section, and a plan of an improved construction of the valve apparatus described in my previous patent, by means of which the engine-driver is enabled to charge the communicating pipe and auxiliary reservoirs with air pressure from the main reservoir, to maintain the pressure in the communicating pipe when the brakes are out of action and to discharge the pressure from the pipes when it is desired to apply the brakes. The present improved construction has mainly for its object to enable a definite higher pressure, say 15 lbs. to the square inch, to be maintained in the main reservoir above that which is maintained in the communicating pipe, while nevertheless the air pressure is able to pass from the former into the latter whenever the pressure in the communicating pipe has become reduced below the determined amount. A is the branch communicating with the main reservoir; B, the passage connected to the communicating pipe; C, the rotary slide valve having openings, C^1, communicating with openings, B^1, leading into B, such openings being of the form shown in dotted lines in plan, so that when the slide C is in the position shown the air pressure can flow freely from A into B, but when the handle D is turned from the position shown in full lines in fig. 29 into either of those indicated by the dotted lines X and Y, or any intermediate position, the communication between the openings B^1 and C^1 is cut off.

The slide C is turned by means of a rib, E^1, on the valve E, entering between projections, C^2, on the slide, and the valve E (which closes the communication between B and the escape passage F) is turned by means of a rib, E^2, on its upper side entering a notch in a screw-cap, G, which is turned by the handle D. When the handle and screw-cap are turned into the position indicated by the dotted line Y, fig. 29, the downward pressure exerted by the spring H being thereby relieved, the valve E is forced open by the air pressure

pressure in B and the communicating pipe, and such pressure consequently escapes into the outer air through the opening F, and the brakes are applied as described in my former patents, the communication between A and B having at the same time been entirely cut off by the partial rotation of the slide C. On the under side of the slide is formed a chamber, I, having an opening at bottom communicating with the branch A and closed by a valve, J, held down by a spring, K, adjusted so as to exert a pressure equal to the difference with which it is desired to be maintained between the main reservoir and the communicating pipe. The chamber I has lastly a small passage, L, leading through the valve C in such a position that when the valve has been turned into the before-mentioned position corresponding with the dotted line X, the said passage communicates with the hole B^1, and thus establishes a communication between the chamber I and the branch B leading to the communicating pipe.

From this arrangement it will be seen that if, after having once charged the communicating pipe and auxiliary reservoirs of the brake carriages with air pressure from the main reservoir, the slide C be turned from the open position shown in the drawing into the position X and left there, then before any additional air pressure can pass from A to B the pressure in the main reservoir must be as much in excess of that at B as is required to open the valve J against the pressure of the spring K, and consequently the pressure in the communicating pipe will always be maintained at the required amount below that in the main reservoir.

In order to give the engine-driver an audible indication of the valve C having been accurately brought into the last-described position, the valve casing might be provided with an escape passage communicating with A, which passage would be closed by C when this was brought into the proper position, so that until this was done the noise of the air pressure escaping by the said passage would be heard.

I have mentioned above that a convenient method of employing compressed air for working the brakes is to use the pipe which communicates throughout a train for the purpose of charging auxiliary reservoirs on the several brake carriages, so as to maintain on each a store of power available for working its brakes. In that case the opening of a valve or cock at the engine or on one of the guard's vans, by relieving the pressure on the communicating pipe, causes the movements of valves which close communication between the pipe and the several auxiliary reservoirs and put these reservoirs in communication with their respective brake cylinders, so that the compressed air stored in the reservoirs acts on the brake pistons, causing the brakes to be applied. In like manner, if, by the separation of the train or other accident, the communicating pipe is broken or opened, the brakes are automatically applied. It often happens, especially in the latter case, that it is necessary to have all the brakes of a train applied simultaneously, or as nearly so as possible, and that consequently no time should be lost in relieving the pressure in the communicating pipe throughout its whole length. In order to provide for this, I arrange at various parts of the communicating pipe or its couplings relief valves of the kind shown in vertical section at fig. 16 and in sectional plan at fig. 17. The valve box shown in these figures is arranged to form part of the couplings which connects the communicating pipe from carriage to carriage. This valve box by its aperture A communicates with the length of pipe in front of it, and by its aperture B with the length of pipe behind it, and it has a third aperture, C, opening to the air. Within the valve box is a piston, D, with holes through it, covered by a valve, E, held down by a spring, *e*. On the stem of the piston is fixed a valve, F, which covers the aperture C. When compressed air enters the valve box by the aperture A from the front portion of the communicating pipe it raises by its pressure the valve E, passes through the holes in the piston D, keeps the valve F closed, and passes on by the passage F^1 and aperture B to the hinder part of the pipe to charge the auxiliary reservoirs in the usual way; but should the pressure in the front part of the pipe communicating with A be reduced, then the valve E closing the holes in the piston D, that piston is pressed down by the pressure from B, and the valve F is drawn from its seat, leaving the orifice C open for the escape of air from the hinder portion of the pipe which communicates with B. By arranging such valve boxes at several points along the communicating pipe, each section of that pipe becomes relieved of pressure almost immediately on the section in front of it being relieved, and consequently the several sets of brakes throughout the train are put in action without the loss of time which would be involved if, for the relief of pressure throughout the pipe, the air contained in the hinder portions of it had to flow all the way to the escape aperture, which might be near its front part.

When a locomotive is started to put a train in motion it often happens, especially if excessive power be suddenly applied, that the driving wheels fail to take sufficient hold of the rails, and the friction being decreased when they slip the engine works at a dangerously rapid speed, so as sometimes to cause serious fracture of some of the moving parts. I avoid damage from this cause by applying to the engine a system of governor which automatically retards the driving wheels when they tend to revolve too rapidly, and which also during ordinary working regulates and indicates the speed of the engine, and can be set so as to limit that speed to a predetermined rate. The arrangements which I employ for this purpose are shown by figs. 18, 19, 20, and 21 of the accompanying drawings. Figs. 18 and 19 show sectional plans of the two combined governors which I employ. Fig. 20 shows a side elevation of one of them, and fig. 21 is a longitudinal section of a cylinder the pressure in which, controlled by the governors, acts on its piston so as to move a throttle or other valve for regulating the supply of steam to the engine. The governor shown in fig. 18 is driven by a band or by frictional contact from one of the running axles of the locomotive or tender, its weights AA and their levers being enclosed within a casing, B, the circumference of which is made to receive a band at *b*, or may have a periphery of leather, wood, or the like, to be driven by frictional contact. The weights AA, by their centrifugal force when revolving, force the stem C inwards towards the left, thereby causing the separate rod *c*, which slides but does not revolve, to be pressed towards the left as shown in the figure, thereby keeping the valve D seated and preventing passage of fluid through it; but when the centrifugal force of the weights AA is reduced by the slower revolution of the governor, then the valve D is moved from its seat by the pressure of the fluid behind it acting on the flexible diaphragm attached to the valve, and a portion of the fluid can then pass through the hole in the valve D and escape by a side passage, *d*, shown in fig. 19. The fluid which thus acts is water supplied from the boiler, or preferably from the condensation of steam from the boiler, and subject to the boiler pressure by the pipe E, which by means of passages provided in the casing (at one part made of very small area by the introduction of a pin attached to a spring valve, *e*) communicates with the pipe F. So long therefore as the valve D is held closed or nearly

nearly closed by the centrifugal force of the governor so that water cannot escape from F through *d* so quickly as it is supplied from E past *e* there is considerable pressure in F; but if the centrifugal force of the governor be so far reduced that the valve D becomes unseated, giving passage to the discharge opening D faster than the fluid is supplied from E past *e*, then the pressure in F becomes lessened. To prevent the pressure in excess ever exceeding a certain limit, a safety-valve, G, is introduced at any convenient part of the pipe F. The pressure regulated as thus described is communicated by the pipe E to the valve box of the second governor shown in fig. 19, where it acts as I will now describe. This second governor is driven by a band or by frictional contact from the driving axle of the locomotive, and the centrifugal force of its weights acts on a piston slide, H, which works in a cavity over a port, *h*, opening to the outer air, the cavity itself being in communication by a pipe, I, with the valve of the regulating cylinder which will hereafter be referred to. The slide H has a stem bearing against a rod, K, faced with a flexible diaphragm, *k*, subject to the pressure in the pipe F. When this pressure is sufficient to counterbalance the centrifugal force of the governor weights, then the slide H covers the port *h*, as shown in the figure, preventing escape of fluid from the pipe I; but when the centrifugal force of the governor exceeds the effect of pressure in the pipe F, acting on the diaphragm *k*, then the slide H being moved towards the left uncovers the port *h* and allows fluid to escape from the pipe I, so reducing the pressure in that pipe. The regulating cylinder shown in fig. 21 has a double piston, N N^1, one of considerably larger area than the other, connected by a rod, O, to a throttle or other suitable regulating valve in the steam pipe of the engine. The space between the two pistons is freely supplied by the passage L with water from the boiler or water of condensation subject to the boiler pressure, or with steam, and the space behind the larger piston is supplied with the same by a passage, *l*, of small area adjustable by a setting screw. This space is in communication with the valve box, in which is fitted a piston valve, M, which seats on and closes an escape aperture, *m*, being kept seated by a spring aided by the pressure in the pipe I, which communicates with the cavity of the slide H worked by the second governor (see fig. 19). While the valve M remains closed, the pressure on both sides of the larger piston being the same, the pistons take the position shown in the figure, the throttle or regulating valve of the engine being then full open, but should the valve M become unseated owing to a reduction of the pressure in the pipe I, then the fluid at the right-hand end of the cylinder escaping faster by the aperture *m* than it can be supplied by the limited passage *l*, the pressure on the back of the larger piston is reduced, and the pistons will therefore be moved towards the right, whereby their rod will be made to close more or less the throttle or regulating valve of the engine.

It will now be seen that if the second governor, fig. 19, which is worked by the driving wheels, be caused to revolve rapidly by these wheels slipping without putting the train in full movement, then the other governor, fig. 18, worked by the running wheels, being then at rest or revolving slowly, the pressure in the pipe F, and therefore on the diaphragm *k*, will be reduced by the escape of water through *d*, as described, while the force pushing the slide H to the left will be considerable, and consequently that slide will uncover the passage *h*, allowing escape of fluid from the pipe I and so reducing the pressure on the valve M, which becoming unseated causes the pistons to move back, closing or partly closing the throttle or regulating valve of the engine supply and so reducing the speed of the engine. The safety-valve G in the pipe F is held down by a spring, which being adjusted to any desired pressure acts as a limit to the speed of the engine by determining the pressure in the diaphragm *k*, which resists the centrifugal force of the governor worked by the engine. When the engine tends to exceed the predetermined speed, the slide H uncovers the passage *h*, and the pistons in the regulating cylinder thereupon move the throttle or regulating valve so as to reduce the supply of steam to the engine and so retard its working. A pressure gauge connected with any part of the pipe F, by showing the pressure in that pipe, will indicate the speed of the engine, that pressure being made to act on the diaphragm *k* as a counterbalance to the centrifugal force of the governor worked by the engine.

Having thus described the nature of my invention and in what manner it is to be performed, I wish it to be understood that I do not claim as my present invention the construction of governor herein described, nor the combination of one such governor with the regulating cylinder for the purpose of actuating a throttle valve, as I have already obtained patent for such construction and combination, nor do I limit myself to the said construction of governor and regulating cylinder, as my present invention can be carried out by variously arranged apparatus, but I claim, in conformity with the law, the herein described system of apparatus for regulating and increasing the efficiency of brakes for railway trains and for controlling the speed of the locomotive wheels, that system being characterized by the following features:—

1. The arrangement of escape-valve in combination with the centrifugal, as described with reference to fig. 1.
2. The arrangement of local governor in connection with the brake lever and escape-valve of a brake carriage, as described with reference to figs. 2, 3, 4, and 5.
3. The arrangement of suspended brake block with lever acting on the escape-valve, as described with reference to figs. 6, 7, and 8.
4. The roughening of the faces of brake blocks, as described with reference to figs. 9 and 10.
5. The grooving of the faces of brake blocks, as described with reference to figs. 9, 10, and 11.
6. The construction of valved coupling for connecting the communicating pipe from carriage to carriage, as described with reference to figs. 12, 13, 14, 15, 22, 23, and 24.
7. The arrangement of relief valve for the communicating pipe, as described with reference to figs. 16 and 17.
8. The method, substantially as herein described, of controlling the speed of the driving-wheels of locomotive engines, by so arranging two governors, driven respectively by the driving and running wheels, in combination with each other that, when the action of the driving-wheel governor overbalances that of the other governor a valve is moved, so as to cut off more or less the steam supply of the locomotive cylinders.
9. The use for controlling the speed of the driving-wheels of locomotive engines of two governors, arranged and operating in combination with a regulating cylinder and throttle valve, as herein described with reference to the accompanying drawings.

10.

10. The use of the governors and regulating cylinder herein described, and shown on the drawing, in combination with an adjustable safety-valve on the pipe establishing the communication between the two governors for regulating the maximum speed of the engine, substantially as herein described.
11. The use of the said governors and regulating cylinder herein described, and shown on the drawing, in combination with a pressure-gauge communicating with the pipe F, for indicating the speed of the engine, substantially as herein described.
12. In the construction of coupling herein described in reference to figs. 25, 26, 25* and 26*, the use of a valve or cock on each half-coupling having an arm engaging with a projection on the other half-coupling, and so arranged that on turning the half-couplings upon each other the valve or cock is turned into the open or closed position, substantially as herein described.
13. In valve apparatus for regulating the admission of fluid pressure to and the escape thereof from the communicating pipes, as described with reference to figs. 27 to 29, the provision of a passage in the rotating slide governed by a spring-valve, so arranged that, when the slide is in a certain position, the fluid pressure in the communicating pipe is maintained at a definite degree below that in the main reservoir, substantially as herein described.

In witness whereof, I, the said George Westinghouse, junior, have hereunto set my hand and seal this seventh day of May, in the year of our Lord one thousand eight hundred and seventy-nine.

GEO. WESTINGHOUSE, JR.

Witness—
OLIVER IMRAY.

This is the specification, marked A, referred to in the annexed Letters of Registration granted to George Westinghouse, junior, this twenty-ninth day of September, A.D. 1879.

AUGUSTUS LOFTUS.

REPORT.

Sir, Sydney, 27 August, 1879.

We do ourselves the honor to state that we see no objection to the issue of Letters of Registration, securing to Mr. George Westinghouse, junior, his invention of an "Improved system of Apparatus for regulating and increasing the efficiency of Brakes for Railway Trains, and for controlling and indicating the speed of locomotive Wheels," in accordance with the Petition, specification, drawings, and claim, transmitted for our report under your blank cover communication of the 19th ultimo, No. 4,024.

We have, &c.,
JOHN WHITTON.
E. O. MORIARTY.

The Principal Under Secretary.

[Drawings—six sheets.]

B.

[768]

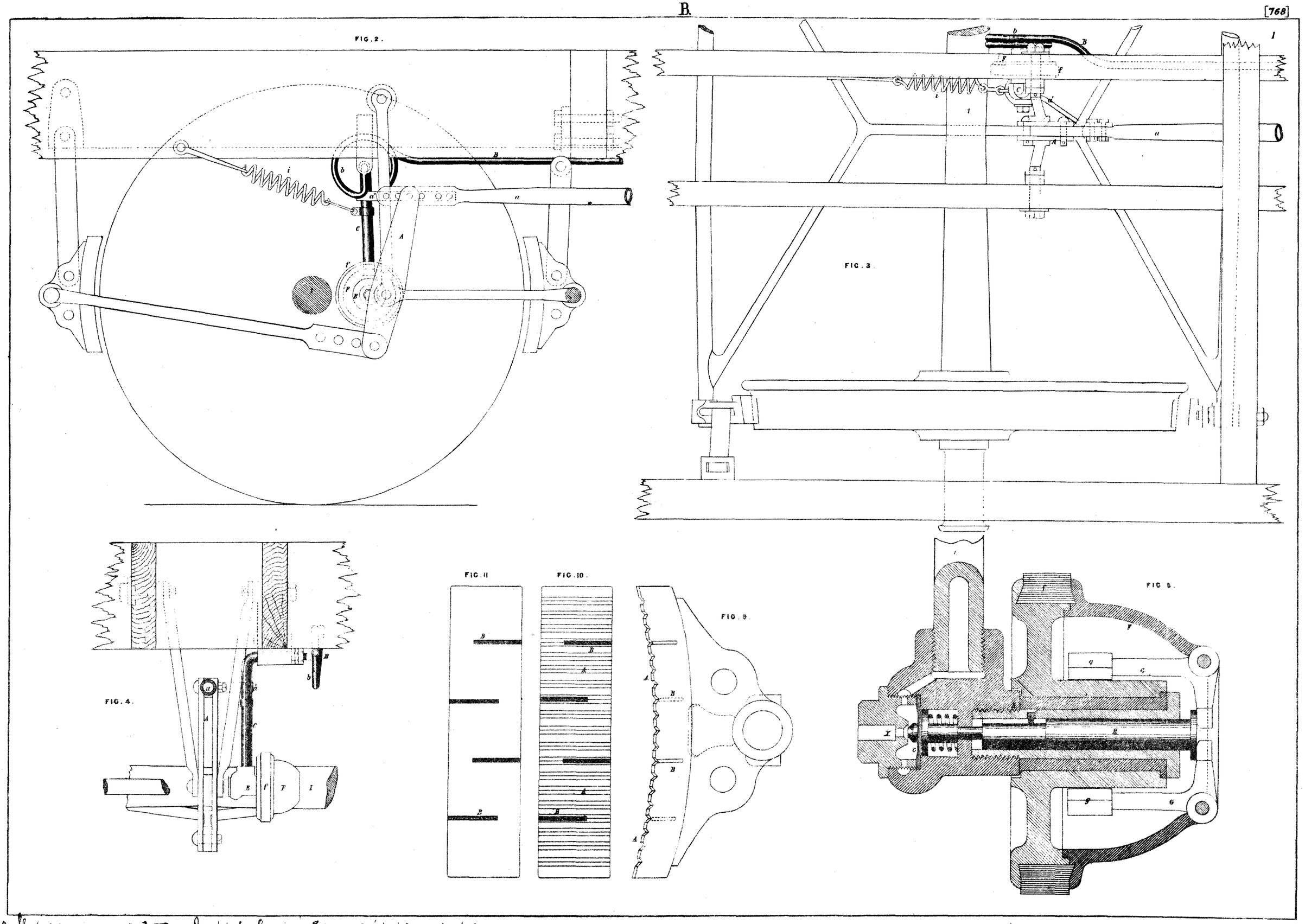

This is the sheet of drawings marked B referred to in the annexed Letters of Registration granted to George Westinghouse Junior this twenty ninth day of September, A.D. 1879.
(Sig. 198-)
"Augustus Loftus"

PHOTO-LITHOGRAPHED AT THE GOVT. PRINTING OFFICE, SYDNEY, NEW SOUTH WALES.

[788]

C

II

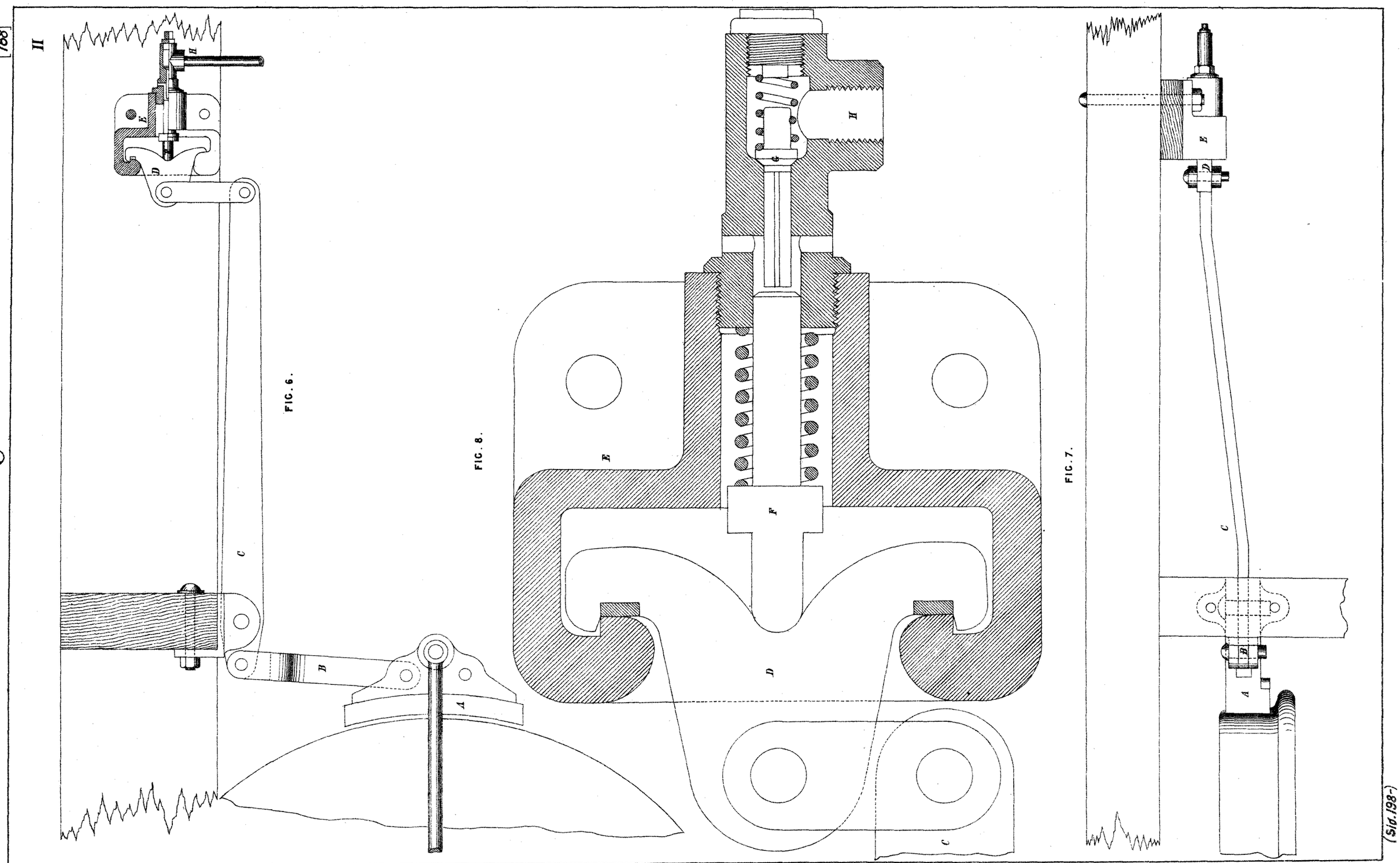

FIG. 6.

FIG. 8.

FIG. 7.

(Sid. 198-)

This is the Sheet of Drawings marked "C" referred to in the annexed Letters of Registration granted to George Westinghouse Junior this twenty ninth day of September A.D. 1879 -

"Augustus Loftus

PHOTO-LITHOGRAPHED AT THE GOVT. PRINTING OFFICE, SYDNEY, NEW SOUTH WALES.

D

[708]

III

FIG. 13.

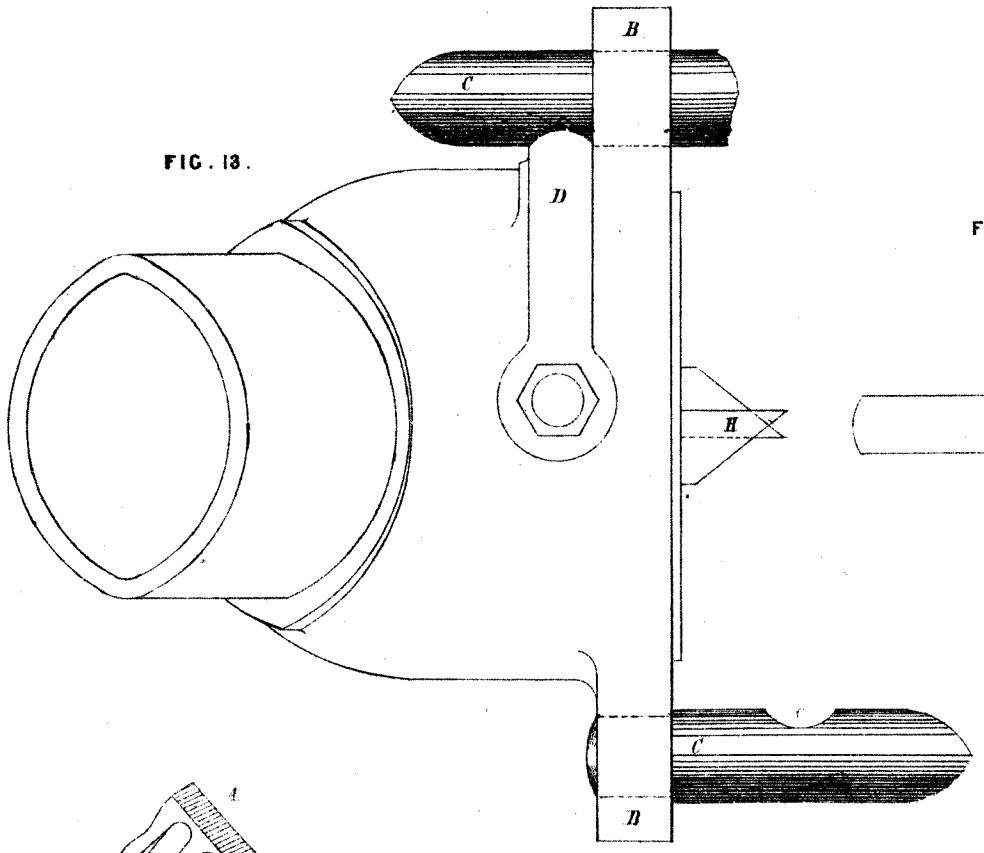

FIG. 15.

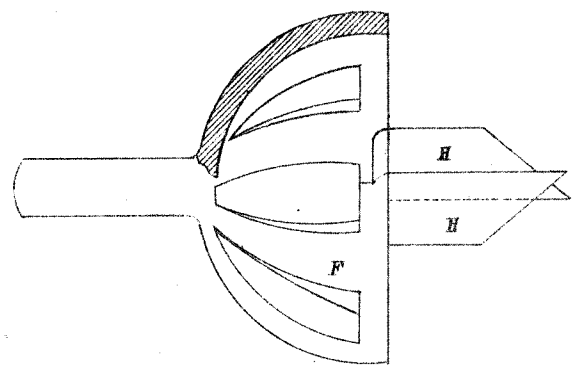

FIG. 12.

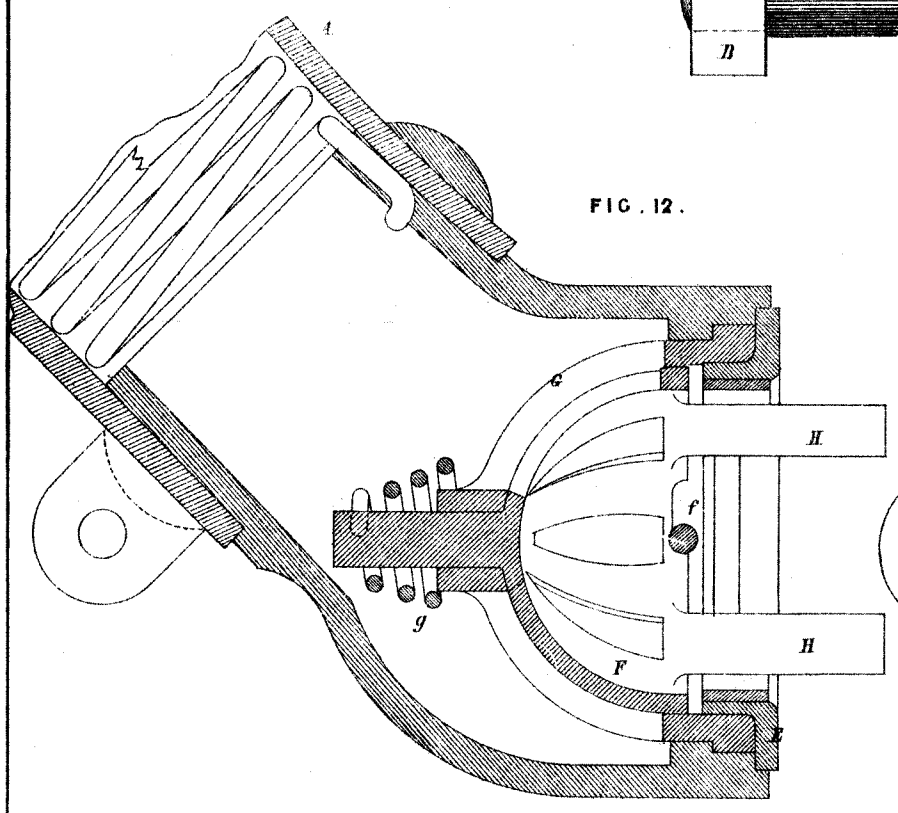

FIG. 14.

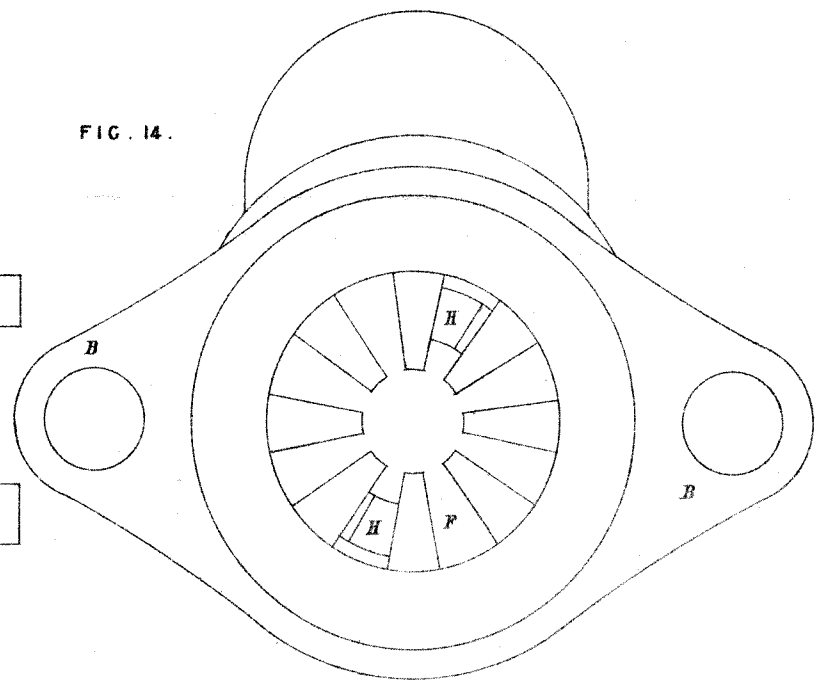

FIG. 16.

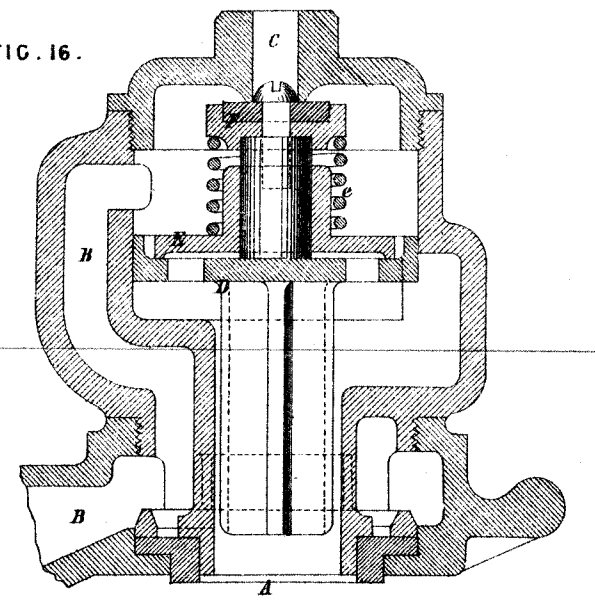

FIG. 1.

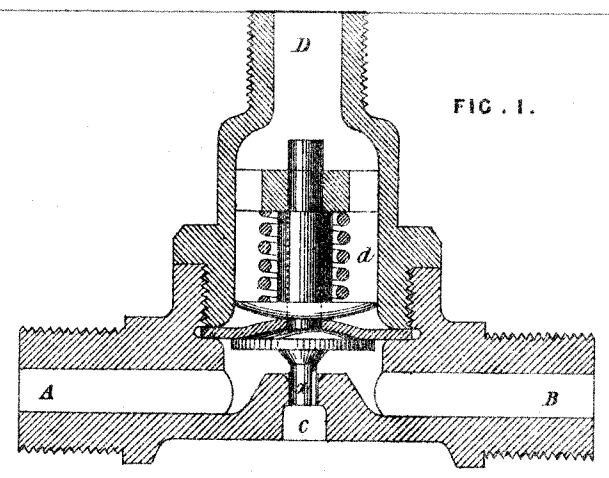

FIG. 17.

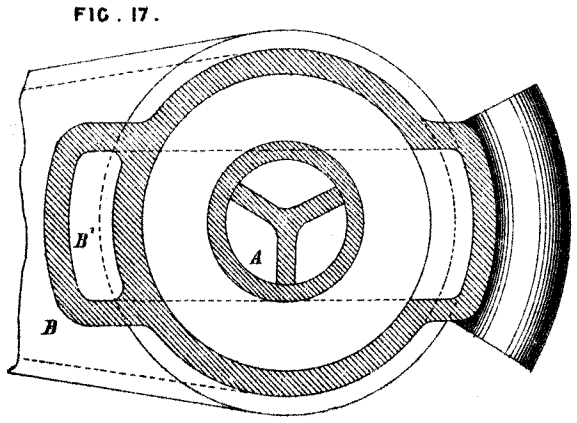

(Sig. 198-)

This is the Sheet of Drawings marked "D" - referred to in the annexed Letters of Registration granted to George Westinghouse Junior this twenty ninth day of September A.D. 1879 -

"Augustus Loftus"

PHOTO-LITHOGRAPHED AT THE GOVT. PRINTING OFFICE, SYDNEY, NEW SOUTH WALES.

FIG. 20.

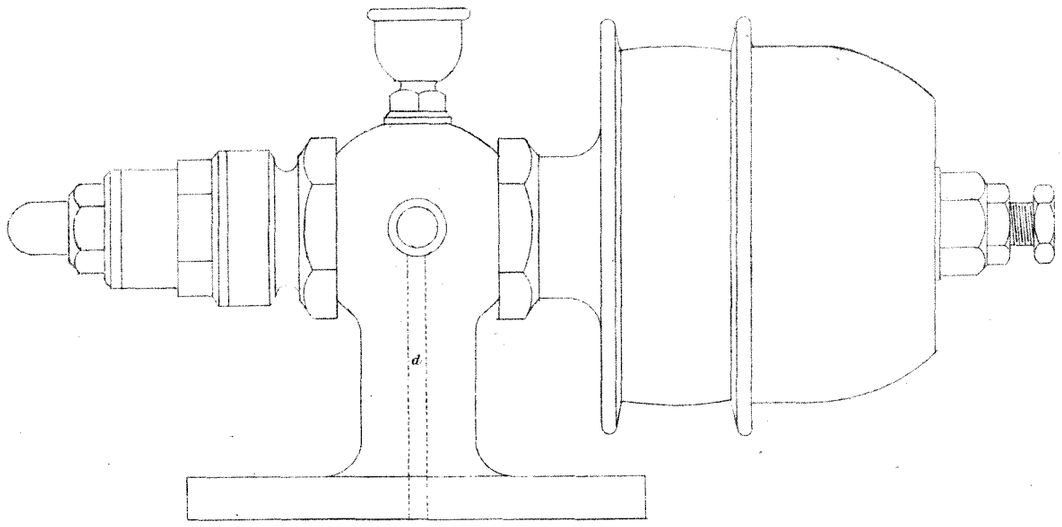

FIG. 18

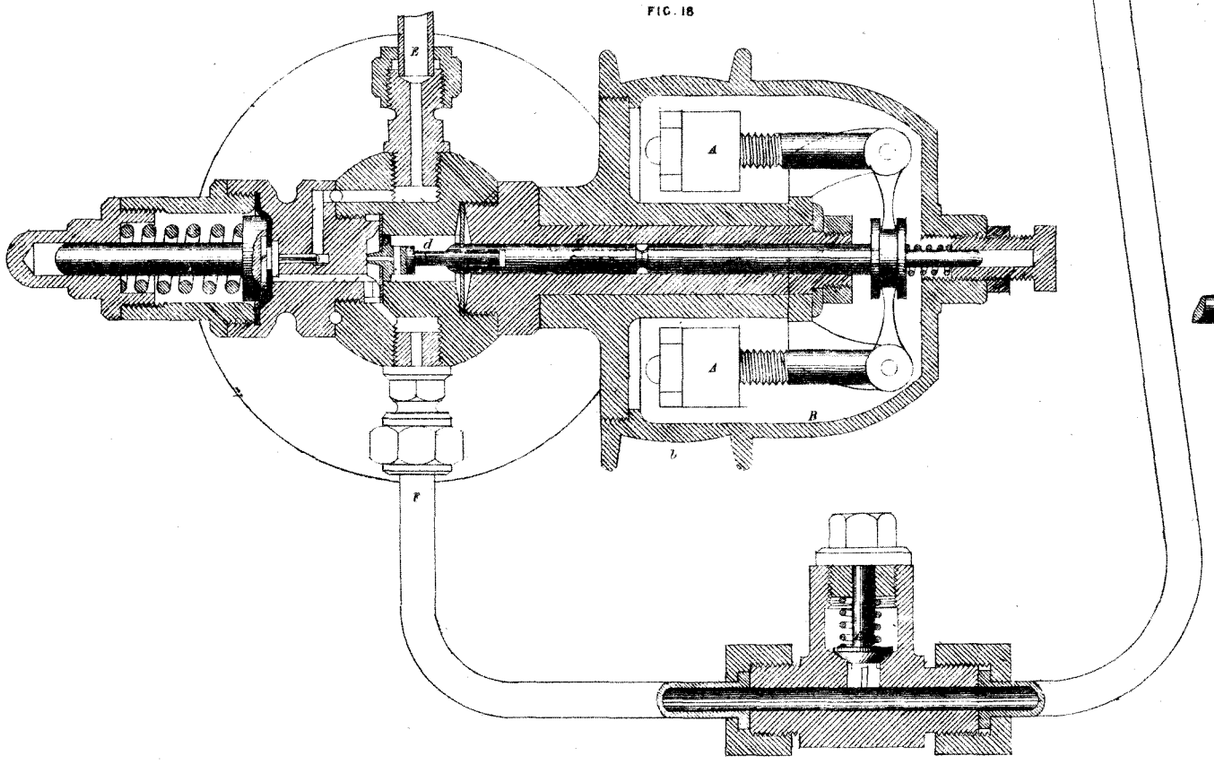

FIG. 19

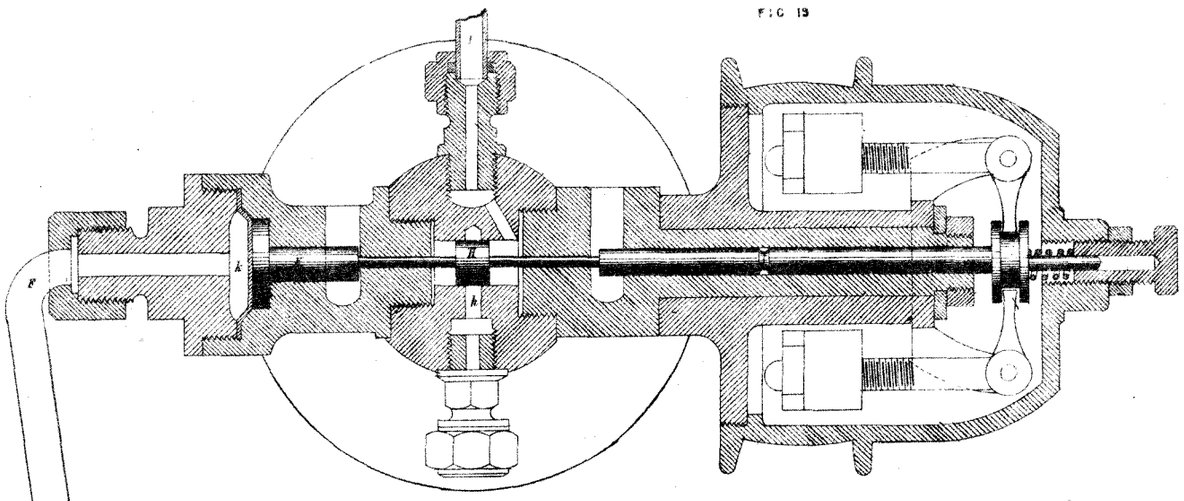

FIG. 21.

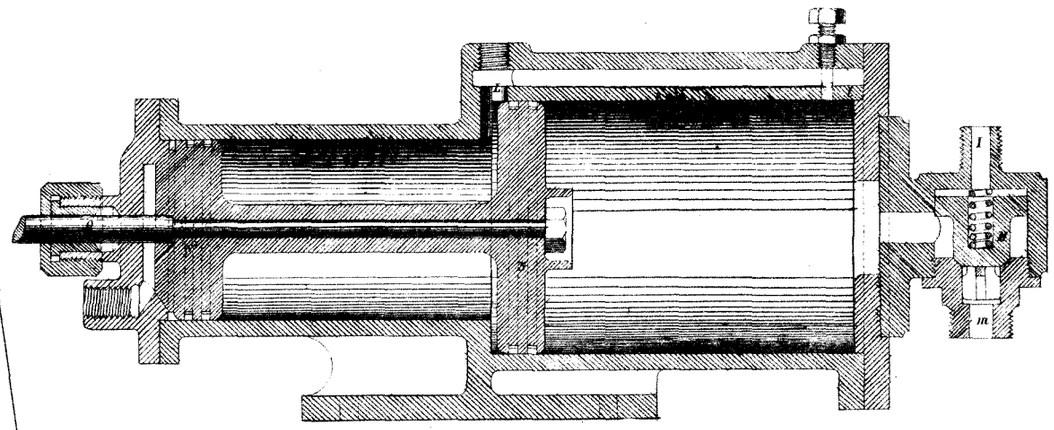

(Sig. 198 -)

This is the Sheet of Drawings marked "E." referred to in the annexed Letters of Registration granted to George Westinghouse Junior this twenty-ninth Day of September 1875.

Augustus Sutton.

PHOTO-LITHOGRAPHED AT THE GOVT. PRINTING OFFICE SYDNEY, NEW SOUTH WALES.

Fig. 27

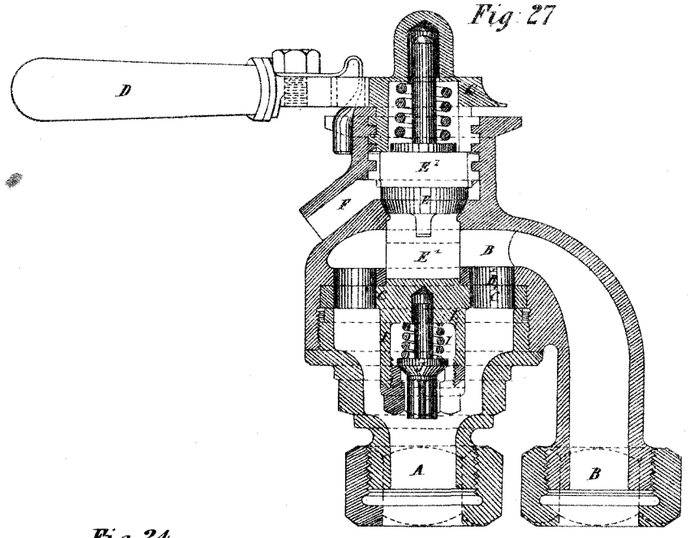

Fig. 28.

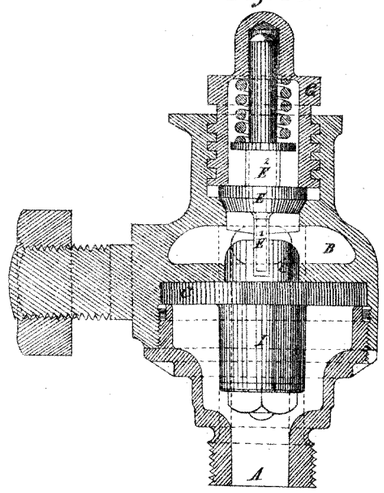

Fig. 29.

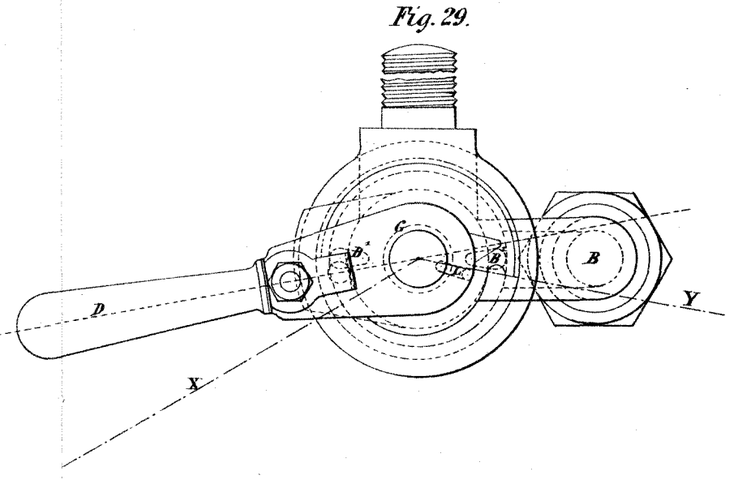

Fig. 24.

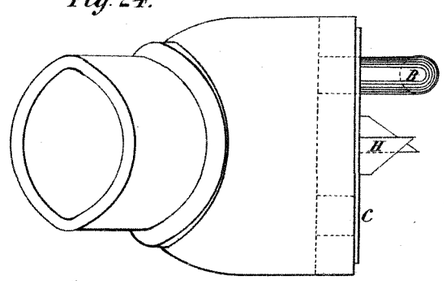

Fig. 25

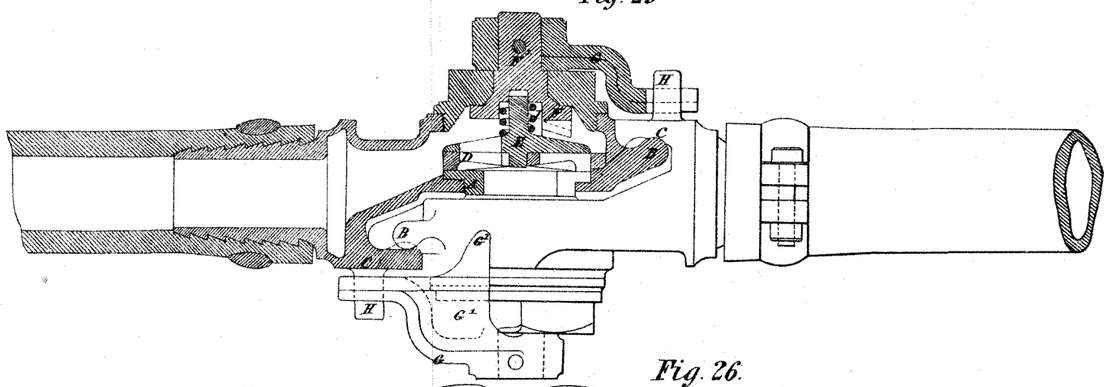

Fig. 22.

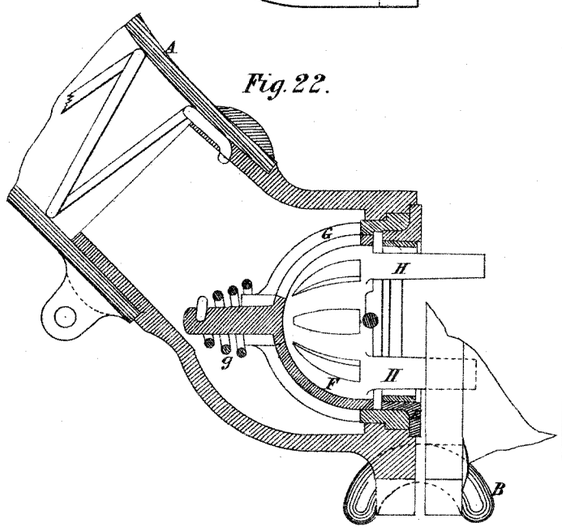

Fig. 23.

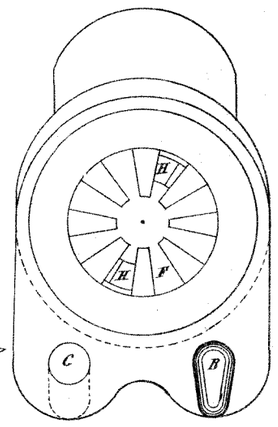

Fig. 26.

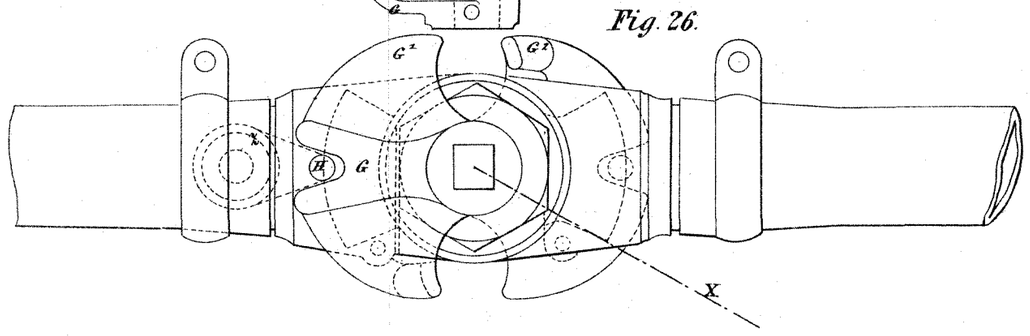

This is the Sheet of Drawings marked F. referred to in the annexed Letters of Registration granted to George Westinghouse Junior, this twentyninth day of September A.D. 1879.

Augustus Loftus.

Sig. 198.

PHOTO-LITHOGRAPHED AT THE GOVT. PRINTING OFFICE, SYDNEY, NEW SOUTH WALES

Fig: 25.

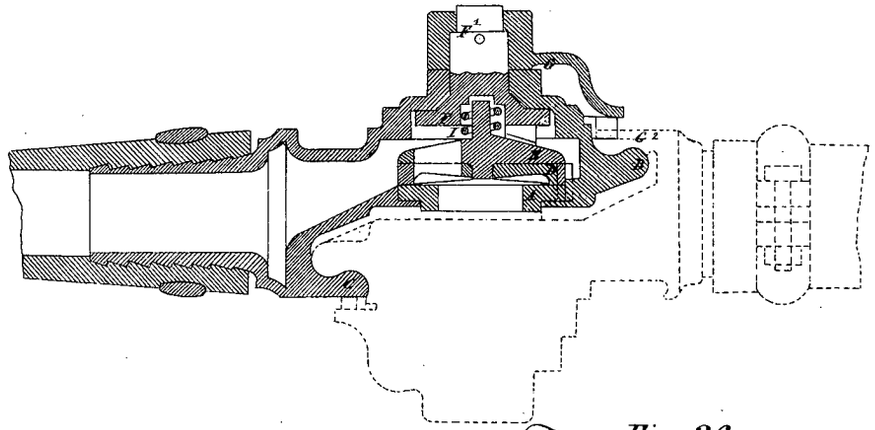

Fig: 26.

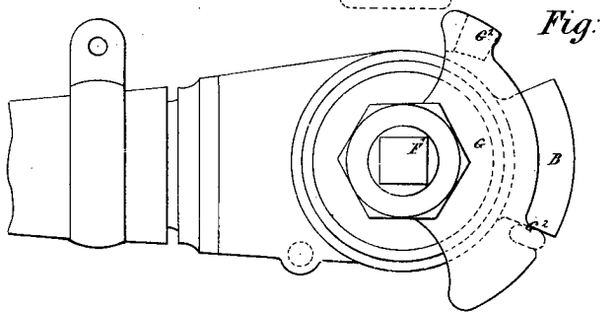

This is the Sheet of Drawings marked G. referred to in the annexed Letters of Registration granted to George Westinghouse, Junior this twenty-ninth day of September, A.D. 1879.

Augustus Loftus.

PHOTO-LITHOGRAPHED AT THE GOVT. PRINTING OFFICE, SYDNEY, NEW SOUTH WALES

A.D. 1879, 29*th September*. No. 769.

THE "ANGUS" BUGGY.

LETTERS OF REGISTRATION to William Thomas Angus, for an Improvement in the construction of a certain Vehicle known as the "Tray" or "Abbott" Buggy, and designated the "Angus" Buggy.

[Registered on the 30th day of September, 1879, in pursuance of the Act 16 Vic. No. 24.]

BY His Excellency the Right Honorable Sir Augustus William Frederick Spencer Loftus (commonly called Lord Augustus Loftus), Knight Grand Cross of the Most Honorable Order of the Bath, a Member of Her Majesty's Most Honorable Privy Council, Governor and Commander-in-Chief of the Colony of New South Wales and its Dependencies.

TO ALL TO WHOM THESE PRESENTS SHALL COME, greeting:

WHEREAS William Thomas Angus, of Castlereagh-street, in the city of Sydney, in the Colony of New South Wales, coach-builder, hath by his Petition humbly represented to me that he is the author or designer of a certain invention or improvement in manufactures, that is to say, of an invention of an "Improvement in the construction of a certain vehicle known as the 'Tray' or 'Abbott' Buggy, and designated the 'Angus' Buggy," which is more particularly described in the specification and the plan or drawing which are hereunto annexed; and that the said Petitioner hath deposited with the Honorable the Treasurer of the said Colony of New South Wales the sum of Twenty Pounds sterling, for defraying the expense of granting these Letters of Registration, as required by the Act of Council, sixteenth Victoria, number twenty-four; and hath humbly prayed that I would be pleased to grant Letters of Registration, whereby the exclusive enjoyment and advantage of the said invention or improvement might be secured to him for a period of fourteen years: And I, being willing to give encouragement to all inventions and improvements in the arts or manufactures which may be for the public good, and having received a report favourable to the prayer of the said Petition, from competent persons appointed by me to examine and consider the matters stated therein and to report thereon for my information, am pleased, with the advice of the Executive Council, and in exercise of the power and authority given to me by the said Act of Council, to grant, and do by these Letters of Registration grant unto the said William Thomas Angus, his executors, administrators, and assigns, the exclusive enjoyment and advantage of the said invention or improvement, for and during the term of fourteen years from the date hereof; to have, hold, and exercise unto the said William Thomas Angus, his executors, administrators, and assigns, the exclusive enjoyment and advantage thereof, for and during and unto the full end and term of fourteen years from the date of these presents next and immediately ensuing, and fully to be complete and ended: Provided always, that if the said William Thomas Angus shall not, within three days after the granting of these Letters of Registration, register the same in the proper office in the Supreme Court, at Sydney, in the said Colony of New South Wales, then these Letters of Registration, and all advantages whatsoever hereby granted, shall cease and become void.

In witness whereof, I have hereunto set my sign manual, and have caused the present Letters of Registration to be sealed with the seal of the said Colony of New South Wales, at Government House, Sydney, in New South Wales, this twenty-ninth day of September, in the year of our Lord one thousand eight hundred and seventy-nine.

[L.S.] AUGUSTUS LOFTUS.

A.D. 1879. No. 769.

The "Angus" Buggy.

SPECIFICATION of the "Angus" Buggy.

It is similar in outline to the vehicle known as the "Tray" or "Abbott" Buggy, but has additions, viz., the back of front seat, A, is higher, and therefore more comfortable, is hinged at bottom, B, and kept up in place by a spring, C, at each side. When the extra seat is required the springs C are raised, the back A let down, forming a seat, A, having side irons, D, with stop running through irons, E, attached to sides of front seat to support it.

The front cushion is then lifted, disclosing a hinged back with two side springs attached to same, the said back being raised (as per dotted line showing it half-raised), the springs catch at sides and hold it in proper place, it then forming a back or support to persons occupying either front or back seat.

The back or boot leather, which is buttoned to the side leathers, is then loosened, rolled up, or pushed under seat. The back part of buggy is hinged on bottom F, and kept up in place by small springs, G, at each side, which being lifted, allow it to fall to the extent which the sliding side supporting irons H permit. The back has another part hinged, I, to top of it, which, falling on a level with it, give a sufficient footboard or support for feet of persons using back seat.

The advantages are:—A complete single and double-seated vehicle, and as a single buggy in very general use; little additional weight of persons properly over springs; no trouble to adapt for use of four persons—the additions for so doing are simple, strong, and not liable to get out of order.

Its appearance and construction as a single buggy is not in any way interfered with.

W. T. ANGUS.

This is the specification referred to in the annexed Letters of Registration granted to William Thomas Angus, this twenty-ninth day of September, A.D. 1879.

AUGUSTUS LOFTUS.

REPORT.

Sir,

Sydney, 8 September, 1879.

We have the honor to return herewith the Petition of Mr. William Thomas Angus, for Letters of Registration for an invention styled the "Angus" Buggy, and to state that we have examined the specification and drawing accompanying the same, and see no objection to the issue of the Letters of Registration as prayed for.

We have, &c.,

EDMUND FOSBERY.

The Principal Under Secretary.

CHARLES COWPER.

[Drawing—one sheet.]

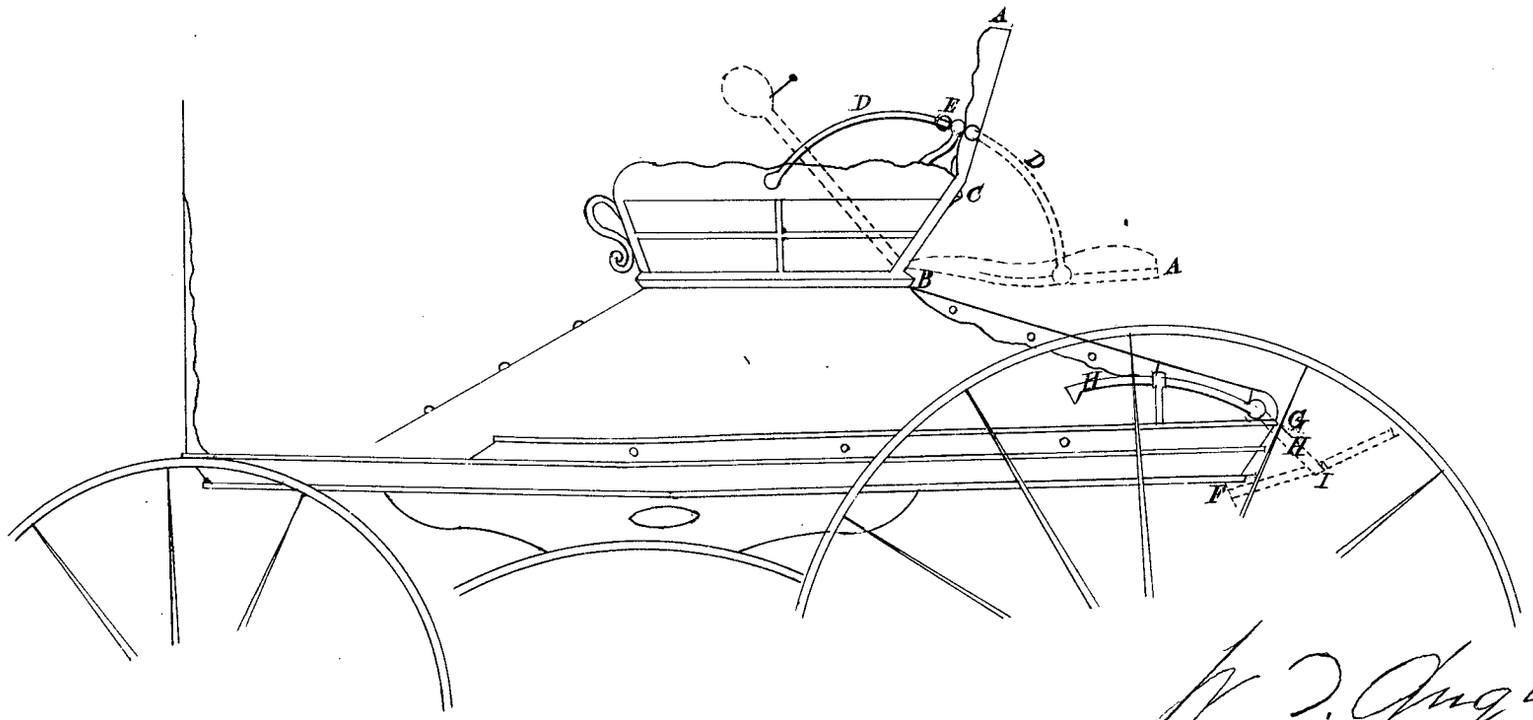

W. T. Angus

This is the plan or drawing referred to in the annexed Letters of Registration, granted to William Thomas Angus, this twenty-ninth day of September, A.D. 1879.

Augustus Loftus.

(Sig. 198)

A.D. 1879, 3*rd October*. No. 770.

AN APPARATUS FOR THE EXTERMINATION OF FLIES.

LETTERS OF REGISTRATION to Richard Schiering, for an Apparatus for the extermination of Flies.

[Registered on the 4th day of October, 1879, in pursuance of the Act 16 Vic. No. 24.]

BY His Excellency the Right Honorable Sir Augustus William Frederick Spencer Loftus (commonly called Lord Augustus Loftus), Knight Grand Cross of the Most Honorable Order of the Bath, a Member of Her Majesty's Most Honorable Privy Council, Governor and Commander-in-Chief of the Colony of New South Wales and its Dependencies.

TO ALL TO WHOM THESE PRESENTS SHALL COME, greeting:

WHEREAS Richard Schiering, of Sydney, in the Colony of New South Wales, druggist, hath by his Petition humbly represented to me that he is the author or designer of a certain invention or improvement in manufactures, that is to say, of an invention of "An Apparatus for the extermination of Flies," which is more particularly described in the amended specification and claims and the sheet of drawings which are hereunto annexed; and that he, the said petitioner, hath deposited with the Honorable the Treasurer of the said Colony of New South Wales the sum of Twenty Pounds sterling, for defraying the expense of granting these Letters of Registration, as required by the Act of Council, sixteenth Victoria, number twenty-four; and hath humbly prayed that I would be pleased to grant Letters of Registration, whereby the exclusive enjoyment and advantage of the said invention or improvement might be secured to him for a period of fourteen years: And I, being willing to give encouragement to all inventions and improvements in the arts or manufactures which may be for the public good, and having received a report favourable to the prayer of the said Petition, from competent persons appointed by me to examine and consider the matters stated therein and to report thereon for my information, am pleased, with the advice of the Executive Council, and in exercise of the power and authority given to me by the said Act of Council, to grant, and do by these Letters of Registration grant unto the said Richard Schiering, his executors, administrators, and assigns, the exclusive enjoyment and advantage of the said invention or improvement, for and during the term of fourteen years from the date hereof; to have, hold, and exercise unto the said Richard Schiering, his executors, administrators, and assigns, the exclusive enjoyment and advantage thereof, for and during and unto the full end and term of fourteen years from the date of these presents next and immediately ensuing, and fully to be complete and ended: Provided always, that if the said Richard Schiering shall not, within three days after the granting of these Letters of Registration, register the same in the proper office in the Supreme Court, at Sydney, in the said Colony of New South Wales, then these Letters of Registration, and all advantages whatsoever hereby granted, shall cease and become void.

In witness whereof, I have hereunto set my sign manual, and have caused the present Letters of Registration to be sealed with the seal of the said Colony of New South Wales, at Government House, Sydney, in New South Wales, this third day of October, in the year of our Lord one thousand eight hundred and seventy-nine.

[L.S.] AUGUSTUS LOFTUS.

A.D. 1879. No. 770.

An Apparatus for the extermination of Flies.

SPECIFICATION of an Apparatus for the extermination of Flies.

A, a wooden rod, upon which the compound is exposed for entrapping the flies.

B, a concave plate, which receives the flies and superfluous composition, and prevents it running over the sides.

C are small apertures for conducting the compound into the receptacle D, and also separates the entrapped flies, which drain down with the compound.

D, a receptacle for storing the compound for re-application.

E, a stopper, the removal of which after inverting the apparatus facilitates the return of the compound on to the rod A when re-applying it.

N.B.—The compound has the consistency of paste.

RICHARD SCHIERING,
328, George-street.

CLAIMS.

I claim the apparatus for the extermination of flies, constructed substantially as described ; but I do not bind myself as to materials, shape, or construction of each part of the apparatus. I likewise claim the compound described when used in the apparatus before mentioned.

RICHARD SCHIERING.

This is the amended specification and claim referred to in the annexed Letters of Registration granted to Richard Schiering, this third day of October, A.D. 1879.

AUGUSTUS LOFTUS.

REPORTS.

Sir, 13 August, 1879.

We do ourselves the honor to return to you the documents transmitted to us under your B.C. communication 79/5,992, having reference to Mr. Schiering's application for Letters of Registration.

As the specification in this case consists merely of certain references to the design which accompanies it, we beg to suggest that the petitioner be required to affix a specific claim to his specification, and it would be better if at the same time he entered a little into detail respecting the apparatus itself, and the nature of the compounds employed therewith.

We have, &c.,
CHAS. WATT.
ROBERT GEO. MASSIE.

The Principal Under Secretary.

Sir, Sydney, 3 September, 1879.

We have the honor to return the papers having reference to Mr. Schiering's application for Letters of Registration, and to remark that he has failed to understand the additions to his specification which we thought it our duty to advise.

As the applicant is a foreigner, we thought it better to explain the matter to him personally, and having done so, we advise that the specification be again returned to him for his amendment.

We have, &c.,
CHAS. WATT.
ROBERT GEO. MASSIE.

The Principal Under Secretary.

Sir, 13 September, 1879.

We have the honor to return the papers having reference to Mr. Schiering's application for Letters of Registration, and to state that, as he has now added claims to the description of the apparatus, we have no other objection to urge, and we therefore recommend that his Petition be granted.

We have, &c.,
CHAS. WATT.
ROBERT GEO. MASSIE.

The Principal Under Secretary.

[Drawings—one sheet.]

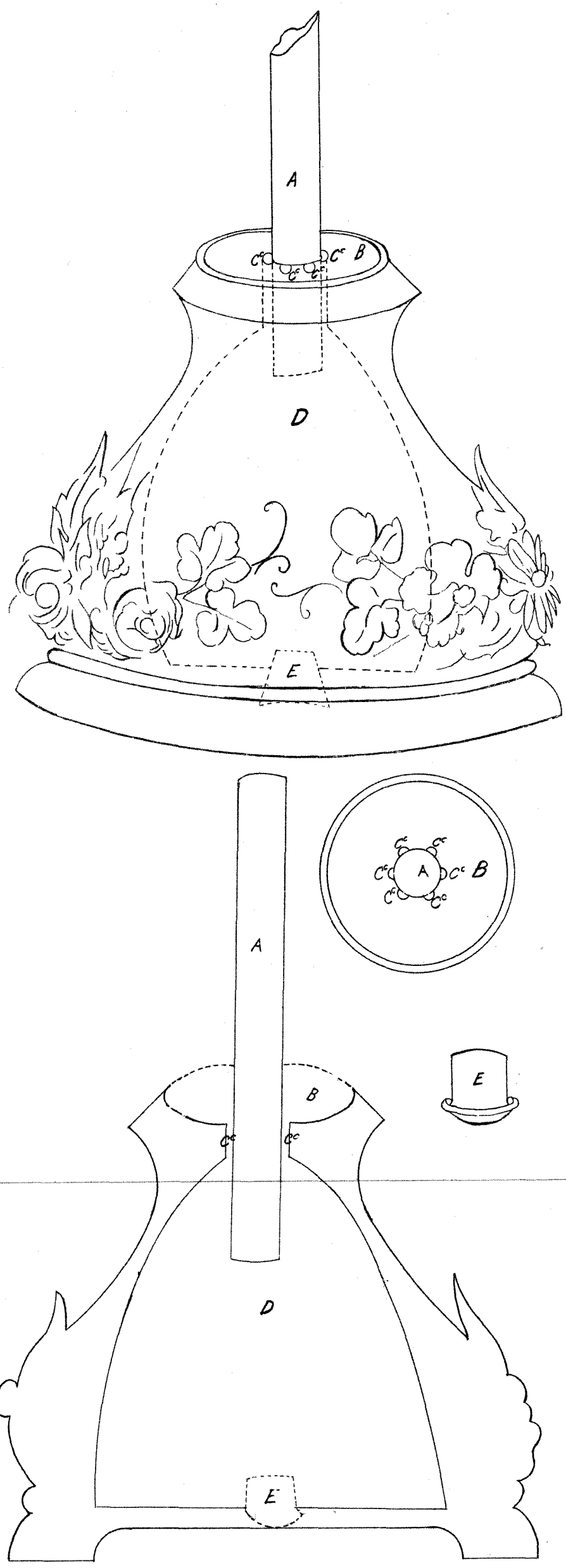

This is the Sheet of Drawings referred to in the annexed Letters of Registration, granted to Richard Schiering this third day of October, A.D. 1879.

Augustus Loftus.

(Sig. 198-)

A.D. 1879, 17*th October*. No. 771.

IMPROVEMENTS IN PROCESSES AND APPARATUS OR ARRANGEMENTS FOR COOLING AND REGULATING THE TEMPERATURE AND DRYNESS OF AIR IN HOLDS, SALOONS, &c.

LETTERS OF REGISTRATION to Henry Bell, James Bell, and Joseph James Coleman, for Improvements in processes and apparatus or arrangements for cooling and regulating the temperature and dryness of air in holds, saloons, &c.

[Registered on the 18th day of October, 1879, in pursuance of the Act 16 Vic. No. 24.]

BY HIS EXCELLENCY THE RIGHT HONORABLE SIR AUGUSTUS WILLIAM FREDERICK SPENCER LOFTUS (commonly called LORD AUGUSTUS LOFTUS), Knight Grand Cross of the Most Honorable Order of the Bath, a Member of Her Majesty's Most Honorable Privy Council, Governor and Commander-in-Chief of the Colony of New South Wales and its Dependencies.

TO ALL TO WHOM THESE PRESENTS SHALL COME, greeting:

WHEREAS HENRY BELL, JAMES BELL, and JOSEPH JAMES COLEMAN, all of Glasgow, Scotland, have by their Petition humbly represented to me that they are the authors or designers of a certain invention or improvement in manufactures, that is to say, of an invention of "Improvements in processes and apparatus or arrangements for cooling and regulating the temperature and dryness of air in holds, saloons, and cabins of ships, and in railway vehicles, hotels, theatres, halls, factories, hospitals, slaughter-houses, and other interiors," which is more particularly described in the specification, marked A, and the five sheets of drawings, marked B, C, D, E, and F respectively, which are hereunto annexed; and that they, the said Petitioners, have deposited with the Honorable the Treasurer of the said Colony of New South Wales the sum of Twenty Pounds sterling, for defraying the expense of granting these Letters of Registration, as required by the Act of Council, sixteenth Victoria, number twenty-four; and have humbly prayed that I would be pleased to grant Letters of Registration, whereby the exclusive enjoyment and advantage of the said invention or improvement might be secured to them for a period of fourteen years: And I, being willing to give encouragement to all inventions and improvements in the arts or manufactures which may be for the public good, and having received a report favourable to the prayer of the said Petition, from competent persons appointed by me to examine and consider the matters stated therein and to report thereon for my information, am pleased, with the advice of the Executive Council, and in exercise of the power and authority given to me by the said Act of Council, to grant, and do by these Letters of Registration grant unto the said Henry Bell, James Bell, and Joseph James Coleman, their executors, administrators, and assigns, the exclusive enjoyment and advantage of the said invention or improvement, for and during the term of fourteen years from the date hereof; to have, hold, and exercise unto the said Henry Bell, James Bell, and Joseph James Coleman, their executors, administrators, and assigns, the exclusive enjoyment and advantage thereof, for and during and unto the full end and term of fourteen years from the date of these presents next and immediately ensuing, and fully to be complete and ended: Provided always, that if the said Henry Bell, James Bell, and Joseph James Coleman shall not, within three days after the granting of these Letters of Registration, register the same in the proper office in the Supreme Court, at Sydney, in the said Colony of New South Wales, then these Letters of Registration, and all advantages whatsoever hereby granted, shall cease and become void.

In witness whereof, I have hereunto set my sign manual, and have caused the present Letters of Registration to be sealed with the seal of the said Colony of New South Wales, at Government House, Sydney, in New South Wales, this seventeenth day of October, in the year of our Lord one thousand eight hundred and seventy-nine.

[L.S.] AUGUSTUS LOFTUS.

Improvements in processes and apparatus or arrangements for cooling and

A.

SPECIFICATION.

TO ALL TO WHOM THESE PRESENTS SHALL COME: We, HENRY BELL, JAMES BELL, and JOSEPH JAMES COLEMAN, all of Glasgow, Scotland, send greeting:

WHEREAS we are desirous of obtaining Letters of Registration for the Colony of New South Wales securing unto us Her Majesty's special license that we, our executors, administrators, and assigns, and such others as we or they should at any time agree with, and no others, should, and lawfully might, from time to time, and at all times during the term of fourteen years next and immediately after the date of the said Letters of Registration, make, use, exercise, and vend within the said Colony of New South Wales an invention for Improvements in processes and apparatus or arrangements for cooling and regulating the temperature and dryness of air in holds, saloons, and cabins of ships, and in railway vehicles, hotels, theatres, halls, factories, hospitals, slaughter-houses, and other interiors: And whereas, in order to obtain such Letters of Registration, we must, by an instrument or specification in writing under our hands and seals, particularly describe and ascertain the nature of the said invention, and in what manner the same is to be performed: Now know ye that the nature of the said invention, and the manner in which the same is to be performed, is particularly described and ascertained in and by the following statement in writing, and on reference to the accompanying five sheets of drawings, that is to say:—

Our said invention has for its object the cooling of air in interiors of ships and other structures or buildings, in an improved and satisfactory manner, and so that any desired temperature lower than that of the external atmosphere may be uniformly maintained, as well as a desirable condition of the cooled air as regards dryness.

In carrying out our said invention, according to one modification, the air to be cooled is drawn from the external atmosphere or from the interior to be cooled by the action of cylinder and piston pumps, in which it is compressed, and whilst being compressed, and also immediately subsequently thereto, it is acted on by jets or streams of water to remove from it the heat rendered sensible by the compression. The water thus applied, or part of it, is injected through a rose into the top of a vessel fitted with a number of perforated diaphragms or equivalent devices for dividing and intermixing the opposing currents, up through which diaphragms or equivalent devices the compressed air passes, whilst the water finds its way downwards. After the compressed air has been thus acted on by the water, it passes through a second set of perforated diaphragms or equivalent devices in the same or a separate vessel, and it deposits the greater part of the moisture suspended in it on these diaphragms or equivalent devices. The air, still in its compressed state, is next led through a considerable length or lengths of piping, or otherwise, over or in contact with an extended metallic surface, which in many applications of our apparatus is cooled externally to a lower temperature than that of the water previously used, the object of this arrangement being to cause the separation and deposition from the air of a further proportion of moisture, which requires in many cases an extra cooling of at least 10 degrees Fahrenheit below what can be accomplished by the water alone, and in all cases the extended course or surface for its being properly effected. The compressed air next proceeds to cylinders in which it expands, acting whilst doing so on pistons so as to do work, and thus contribute to the working of the compressing cylinders or pumps, the remainder of the power for working the latter being supplied by cylinders and pistons worked by steam.

The air re-expanded after compression and cooling in the compressed state will have become cooled as compared with the external atmosphere to an extent depending on the degree of compression employed and other circumstances, and it may then be led or discharged into the hold, saloon, apartment, or interior, either to mingle therein with air entering from the external atmosphere, or it may form the exclusive supply of air thereto. The general temperature in the saloon may be regulated by suitably proportioning the supply of the cooled air, which can be easily effected by adjusting the speed of the engine working the apparatus. The cooled air supplied in this way would be objectionably charged with moisture, were it not for the arrangements hereinbefore described for preventing an excess of sensible or undissolved moisture from being present in the re-expanded air, in the form of snow or fog, which, besides being prejudicial to the wholesomeness of the re-expanded air, would be liable to cause much inconvenience by choking the passages of the expansion cylinders and the distribution pipes.

The extra cooling of the compressed air, when required, is effected by subjecting the pipes or vessels through which the compressed air passes to the action of the re-expanded air itself, either alone or mixed with air from the external atmosphere, and either before or after it has been used for the purposes for which it has been cooled; the parts or apparatus being arranged for obtaining this action in a variety of ways to suit the circumstances of the different cases to which our improved air-cooling apparatus is to be applied.

In some cases we employ apparatus for causing a supplementary circulation in the interiors into which the air cooled by our apparatus is delivered, that is, a circulation of the air additional to that due to the continuous but comparatively slow supply of cooled air, in order to approximate more nearly to a uniformity of temperature throughout the interiors, and to prevent excess of cooling action at certain parts.

And in order that our said invention and the manner of performing the same may be properly understood, we hereunto append five sheets of explanatory drawings, to be hereinafter referred to, and representing examples of various modifications of our improved apparatus or arrangements. In these drawings the same reference numerals are used to mark the same or like parts wherever they are repeated.

Figures 1 to 8, on sheet 1 of the accompanying drawings, represent our improved arrangement of engines or apparatus for effecting the cooling of air, together with one modification of our apparatus for subjecting the air when in a compressed state to an extra cooling action as hereinbefore explained. The engines shown in these figures are specially designed for being fitted in a ship; and as in this application it is of great importance that the least possible space should be occupied, the parts of the engines are combined and arranged in a very compact form, regard being at the same time had to the rendering of every part conveniently accessible for examination or adjustment, notwithstanding the very confined space between

between decks in which the engines have to be placed. The engines occupy a space which is approximately rectangular in plan, the parts being carried upon a bed frame, 1, at one end of which there are two double-acting compressing cylinders or pumps, 2, whilst the expansion cylinders, 3, are at about the middle, and the transverse horizontal driving-shaft, 4, is at the other end. The pumps, 2, and expansion cylinders, 3, are horizontal, the same piston rods being continued through the latter to work the former, and being themselves actuated by means of connecting rods from cranks at right angles to each other on the shaft, 4. In order to reduce the length of space occupied, vertical steam cylinders, 5, are placed over the crank shaft 4; and in order that little vertical height may be occupied and the parts be easily got at, there are four small cylinders, 5, which are arranged in two pairs. The two steam cylinders, 5, of each pair are worked with the same valves, and the two pistons rods extend downwards to one crosshead below the shaft 4, from the centre of which crosshead a connecting rod returns upwards to the crank. The two crossheads are connected to the same cranks as the piston rods of the expansion cylinders, 3, and pumps, 2, and the crank shaft, 4, has fixed on it a pair of fly-wheels, there being one on each of its overhanging ends. Both the steam cylinders, 5, and the expansion cylinders, 3, are provided with slide valves and with expansion valves working on the backs of the slide valves, and all worked by eccentrics on the crank shaft 4, as in ordinary steam-engines. At each end of each compressing cylinder or pump, 2, there are three valves, the two upper ones arranged for admitting air, and the third lower one for discharging it when compressed by the action of the piston into a passage, 6 (figure 5), in the bed-frame casting, 1. The valves are simple conical-edged disc valves, fitted with helical springs for closing them. Each passage, 6, which receives the air from the same end of both pumps, communicates with a chamber, 7, having set on the top of it a cylinder, 8, which is open to the chamber 7, at its bottom, and is fitted with a number of perforated diaphragms, up through which the compressed air has to pass. At the top of the cylinder 8 there is fitted a water inlet pipe, 9, provided with a rose from which the water is delivered in a shower down through the perforated diaphragms, so as to meet the ascending air and remove from it the most of the heat in it rendered sensible by the compressing action and not already removed by water injected into the cylinders, 2. The water injected into the cylinders 2 and 8 is forced by a pair of pumps, 10, worked by eccentrics on the crank shaft 4. The compressed air passes from the upper parts of the cylinders 8, by pipes, 11, to the tops of cylinders 12, provided with perforated diaphragms, down through which it passes to a chamber, 13, below. This second set of diaphragms serves to retain from the air passing through them a large portion of the water mechanically carried over, the water draining down into the chamber 13, from which chamber, as well as from the chamber 7, the water is removed by means of float valves or equivalent devices. From the chamber 13, the compressed air passes into the apparatus provided for the separation and deposition from it of moisture still remaining in it, and which if not removed at this stage would cause serious inconvenience on the air being re-expanded. One modification of this depositing apparatus is shown in vertical section in figure 6, in sectional plan in figure 7, and in sectional side elevation in figure 8. The depositing apparatus comprises a long horizontal iron box or pipe, 14, of rectangular section, forming the bottom, a series of vertical pipes, 15, of square section, and an upper horizontal box or pipe, 16, connected to the bottom box 14, by the intermediate pipes, 15. The pipes 15 may be cast in sets of any convenient number, united by top and bottom flanges (and at other points if thought desirable), the top and bottom flanges being planed to fit planed faces on the under side of the top box, 16, and the upper side of the bottom box, 14, respectively. The compressed air enters one end of the bottom box 14, and has at once access to the vertical pipes 15; and as it is convenient for the air to pass off from the same end of the depositing apparatus as that at which it enters it, the top box 16 is formed with internal partitions arranged to cause the air from the vertical pipes 15 to first proceed to the further end of the box and then return to the end at which it leaves the apparatus, an arrangement tending to equalise the proportions of air passing through the several vertical pipes 15. The moisture deposited from the air drains down the internal surfaces of the vertical pipes 15, and finds its way along the bottom box 14, to the chamber 13.

In some cases it is preferable to make the inlet and outlet boxes, 14, 16, of the moisture-depositing pipes or tubes, 15, vertical, and to place the pipes or tubes 15 nearly horizontal. The lower ends of the pipes or tubes should connect with the inlet box 14, and the inclination should be sufficient to cause the moisture deposited to drain into that box. When placed nearly horizontal, the pipes or tubes 15 may each be in two or more lengths, connected by means of flanges or otherwise.

Figures 9, 10, 11, on sheet 2 of the accompanying drawings, and figure 12, on sheet 3, are vertical sections showing some modifications of our arrangements suitable for some kinds of ship saloons, and also for other interiors. Figure 9 is a longitudinal section of a passage giving access to a number of state rooms or separate apartments; and in this example casings are formed at intervals in the partition or wall, and are covered by panels, which are at one part shown removed or broken away, whilst a vertical section as at right angles to figure 9 is shown at the side. In each such casing the re-expanded air, or a small portion thereof, is admitted at the lower part by a branch, 17, from a main pipe, 18, and passes upwards in contact with vertical pipes 19, having the compressed air passing through them. After acting on the compressed air pipes 19, the re-expanded air issues from the casing by perforations, 20, at the upper part of the casing, or it might be in a cornice or ceiling ornament with which the top of the casing communicates. There may be some openings, 20, for delivering the air into the state cabins or separate apartments as well as others for delivering it into the passage, or into a saloon when the casings are fitted at the sides or ends of a saloon, and such openings, 20, may be fitted with slides for regulating the quantity of air delivered at each point. The pipes 19 are connected to a main pipe, 21, the air being compelled to pass through the pipes 19 by stops which do not prevent the passage along the main pipe, 21, of water deposited from the compressed air, the stops dipping into depressions or pockets which allow the water to pass whilst retaining enough to act as a seal. In saloons having fixed seats at the sides or other parts as shown in figure 10, casings, 22, for the compressed air pipes 23, may be formed under such seats, the re-expanded air being made to surround the pipes 23, in such casings, 22, and then issue therefrom, or from other parts in communication with the casings 22. In figure 10, the casings 22 communicate by passages in the partitions or walls with a perforated cornice. In cases in which it is desirable to use the utmost economy in the fuel employed to work the apparatus, the communications of the saloon or other interior with the external atmosphere should all be provided with double doors closing as air-tight as possible.

Figures

Improvements in processes and apparatus or arrangements for cooling and

Figures 11 and 12 are vertical sections as at right angles to each other showing parts of two decks of a passenger ship with a large saloon occupying the entire width of the upper deck, and with the air-cooling engines or apparatus on the deck below. In this example, moisture-depositing apparatus of the kind shown in figures 6, 7, 8, and hereinbefore described, is placed along the middle of the saloon, in a casing, 24, into which the re-expanded air or a portion thereof is delivered. The air passes from the casing 24, by hollow pillars or pipes, 25, up to pipes, 26, laid beside the beams across the top of the saloon, such pipes, 26, having perforations or valved openings suitably placed for securing a proper distribution of the cooled air over the saloon.

In other modifications of our arrangements for separating moisture, the pipes containing the compressed air are subjected to the action of air which is passing from the apartment or interior, and which, although not so cold as the air entering from the re-expansion cylinders, is still in some cases cool enough to have the desired effect on the compressed air. This arrangement will be specially required when a temperature at or below the freezing-point is maintained in the apartment or interior (for the purpose, for example, of preserving meat or other food when being conveyed long distances), as freezing of the moisture in the compressed air pipes must be avoided, to which end, if it should in any case be necessary, some air from the outside must be mixed with that passing over the pipes. In such cases the walls of the apartment or interior may be made double or hollow, as shown in vertical section in figure 13, on sheet 3 of the accompanying drawings, the compressed air pipes, 27, being placed between them, with a general inclination or other provision for draining off the moisture separated from the compressed air. The double walls are fitted with valved inlets, 28, 29, on both sides, and, at a point or points, 30, as distant as may be convenient from such inlets, the spaces communicate with a pipe or passages leading to the compressing cylinders, 2. With these arrangements, the inlet valves, 28, 29, can be adjusted to admit from the apartment or interior, and from the external atmosphere respectively, whatever proportions of air may be found suitable in practice.

Instead of spaces being formed between double walls for the purposes last hereinbefore described, suitable boxes or casings may be placed in any convenient positions; and instead of ordinary round pipes being used for the compressed air either in the double wall spaces or boxes or otherwise, the ducts or passages for the compressed air may be made of any suitable form, the only essential points being that they should be strong enough to resist the pressure of the air, present extended metallic surfaces for the transference of heat, and be constructed and arranged so that moisture may be easily drained from them.

Figure 14 is a sectional elevation showing examples of the arranging of our moisture-depositing apparatus in boxes or casings apart from walls or partitions, and which boxes or casings may be placed in whatever positions may be found convenient or advantageous in practice. What is shown in figures 11 and 12, hereinbefore described, is also an example of the same arrangements.

Figure 15, on sheet 4 of the accompanying drawings, is a horizontal section showing the main features of an example of our improved apparatus and arrangements as at present practically carried out on board a transatlantic steamer, for the purpose of preserving meat during transit from the United States to Europe. Figure 16, on sheet 5 of the accompanying drawings, is a transverse vertical section corresponding to figure 15. The meat chamber occupies the entire space between the ship's sides and two transverse bulkheads, 31, 32, excepting the space required for the hatchway, 33, which is at the forward end of the chamber, and excepting that containing the refrigerating machinery. The cold-producing apparatus or engines are placed forward of the fore bulkhead, 32. The moisture-depositing apparatus is of the kind shown in figures 11 and 12, hereinbefore described, and is placed along the middle of the meat chamber; but as the temperature in the meat chamber has to be considerably lower than in a saloon, it is not the re-expanded air on its way from the engines to the meat chamber which passes through the casing 24, containing the moisture-depositing pipes or apparatus. The casing 24 is provided with a number of valved gratings, 28, or apertures, through which the air enters after being in the meat chamber; and in case this air may be too cold, a pipe or duct, 34, with a regulating valve, is fitted to the after end of the casing 24, and being extended to the upper deck serves to admit as much air from the external atmosphere as may be found necessary to yield a suitable temperature within the casing 24, by mixing with more or less air from the meat chamber. The air thus entering the casing 24 is drawn through the pipe 35, to the pumps or compressing cylinders, 2, and when compressed the air proceeds by the pipe 36 to the bottom of the moisture-depositing apparatus in the casing 24, afterwards returning by the pipe 37 to the re-expansion cylinders, 3. The re-expanded air passes from the exhaust ports of the cylinders, 3, into chambers, 38 (figure 2), beneath the cylinders, and thence enters a main pipe, 39, which is connected to branch pipes, 40, extending to each side of the ship. It is desirable to have the exhaust passages of the re-expansion cylinders, 3, the chambers, 38, and the main pipe, 39, of large size, in order that any snow that may be separated may not obstruct the passage of the re-expanded air. The pipes 40 communicate with casings or ducts, 41, formed along the bottoms of the sides of the meat chamber, these ducts being made with horizontal partitions extending from their forward ends to about the middle of the meat chamber. The communications of the pipes 40 are under the partitions of the ducts 41, so that the air proceeds under the partitions to the middle of the chamber, and thence proceeds fore and aft along the upper parts of the ducts. To the tops of the ducts 41 a number of pipes, 42, of thin metal or other suitable material, are connected, and these pipes are carried up the sides of the chamber and then along the beams, in the manner indicated by dotted lines in figure 15, the several pipes, 42, delivering the air from their open ends, and being of different lengths, so as to equalise the distribution of the freshly cooled air throughout the meat chamber.

Another arrangement of parts for distributing the cooled air in the meat chamber is shown in transverse vertical section in figure 17. In this modification, instead of the side ducts, 41, having a number of separate pipes, 42, connected to them, they communicate with thin continuous spaces, 43, formed along the sides of the meat chamber and open along the top, so that the air may enter the chamber in continuous films along the tops of the sides. The ducts 41 communicate with the spaces 43, by a number of separate openings, which may be fitted with valves, or be made of such sizes as to secure a sufficiently uniform distribution throughout.

In

In some cases, in order to obtain a nearer approximation to uniformity of temperature and condition throughout the various parts of the ship's hold, meat room, or other interior, we employ what may be termed a supplementary circulation in such interior, it having been found that the circulation due to the continuous introduction of cooled air from the compressing and re-expanding machinery does not always bring about the desired uniformity. A comparatively vigorous circulation is especially desirable when the interior is occupied to a greater or less extent with articles which tend to retard or obstruct the air currents, as happens in rooms in ships in which meat is conveyed. We employ a fan or other blowing machine, 44, as indicated by dotted lines in figures 15 and 16, on sheets 4 and 5 of the accompanying drawings, which may be conveniently driven from the fly-wheel or a pulley on the crank shaft of the steam-engine which works the air-compressing machinery. Ducts, pipes, or passages, 45, with branches if necessary, and separate openings, are fitted in connection with the fan or blower 44, so as to draw the air from one or more parts of the interior and to re-inject the air into one or more other parts thereof.

The primary ducts, pipes, or passages, 41, into which the cooled air passes from the compressing and re-expanding machinery on its way to be distributed by branch or other pipes, 42, to various parts of the interior, are found to become excessively cold, and to cause a greater cooling action in their neighbourhood than is necessary or in some cases desirable. This inconvenience is obviated by constructing or applying the supplementary circulation passages hereinbefore referred to, or a sufficient part of them, contiguously to the cold-air passages, or so as to cover the parts or sides thereof, as indicated by dotted lines at 46. For example, each cold-air duct, pipe, or passage may be within a larger duct, pipe or passage, the space in the latter surrounding the former, being a passage for the supplementary circulation current, which current will consequently become cooled to a certain extent, and thus, whilst preventing excessive cooling action in the neighbourhood of the cold-air passage, will facilitate and equalise the general cooling action throughout the interior. In some cases it will be more convenient for the supplementary circulation passage to, as it were, cover or enclose only a part, as for example the top and side of the cold-air passage as at 46, when this is at the lower corner of the room, or the bottom and side when the cold-air passage occupies an upper corner. When the cooled air is delivered into a meat room in a ship or other interior through thin casings, 43, having continuous narrow openings along the tops, such casings being at the sides of the room, according to the arrangement hereinbefore described with reference to figure 17, similar casings, 47, are constructed as shown at the right-hand side of figure 17, for the delivery of the supplementary circulation currents into the room, and are interposed between the cold-air casings, 43, and the sides of the room, so as to prevent waste of cooling action on the sides or walls. These vertical delivery casings, 47, may be in addition to supplementary circulation casings, 48, covering or enclosing the horizontal cold-air ducts, 41, on the sides which would otherwise be exposed to the interior of the room.

When there is any possibility that the water employed for cooling the compressed air, by being injected into it, may contaminate the air with septic or other impurities, the air before entering the apartment or interior for which it is being cooled is passed through a box or chamber containing animal charcoal or other suitable purifying or filtering agent.

Our present invention also comprises the automatic regulation of the action of the air-cooling apparatus by means of a metal rod placed in the saloon or other interior, the size of such interior being taken advantage of by making the rod as long as possible, in order to obtain considerable variation in its length by changes of temperature. The rod is connected to the throttle-valve of the steam-engine, through levers and links; or to the valve of a steam cylinder, the piston of which is connected to the throttle-valve.

Having thus particularly described our said invention and the manner of performing the same, we have to state that we do not restrict ourselves to the precise details herein described and delineated, but that what we believe to be novel and original, and claim as the invention which we desire to secure by filing the present specification is:—

1. The combination of refrigerative processes for cooling air for interiors of ships and other structures or buildings, wherein compressed air is first cooled by injecting water during compression, and by intermingling opposite currents of water with the air immediately after compression; is, secondly, passed in contact with extended metallic surfaces for the deposition of moisture; is, thirdly, re-expanded against resistance; and is, fourthly, passed in contact with the moisture-depositing apparatus, all substantially as and for the purposes hereinbefore described.
2. The arranging or combining together of steam-engine, air-compressing, compressed-air-cooling, and air-expansion apparatus in the improved manner substantially as hereinbefore described with reference to figures 1 to 5 of the accompanying drawings.
3. The moisture-depositing apparatus hereinbefore described with reference to figures 6, 7, 8 of the accompanying drawings.
4. The combined moisture-depositing and re-expanded air-distributing apparatus hereinbefore described with reference to figure 9 of the accompanying drawings.
5. The combined moisture-depositing and re-expanded air-distributing apparatus hereinbefore described with reference to figure 10 of the accompanying drawings.
6. The arranging of the moisture-depositing and re-expanded air-distributing apparatus as hereinbefore described with reference to figures 11 and 12 of the accompanying drawings.
7. The placing of the moisture-depositing apparatus in casings or in hollow partitions provided with inlets, outlets, or connections and valves for controlling the passage in contact with the said apparatus of whatever current or currents of air are found suitable, the parts being arranged substantially as hereinbefore described.
8. The constructing of a chamber in which a temperature below or not much above freezing-point is to be maintained, substantially as hereinbefore described with reference to figure 13 of the accompanying drawings.
9. The combined arrangements hereinbefore described with reference to figures 15 and 16 of the accompanying drawings.
10. The arrangements for distributing the re-expanded air hereinbefore described with reference to figures 15 and 16 of the accompanying drawings.

11. The arrangements for distributing the re-expanded air hereinbefore described with reference to figure 17 of the accompanying drawings.
12. The combining of supplementary circulation apparatus with the refrigerating machinery, such apparatus comprising a fan or blower drawing air from the interior and re-distributing it therein by pipes, ducts, or passages, substantially as and for the purposes hereinbefore described.
13. The constructing of the pipes, ducts, or passages for the supplementary circulation currents contiguously to or so as to cover the main pipes, ducts, or passages through which the cooled or re-expanded air is passed, substantially as and for the purposes hereinbefore described.

In witness whereof, we, the said Henry Bell, James Bell, and Joseph James Coleman, have hereunto set our hands and seals, this first day of August, in the year of our Lord one thousand eight hundred and seventy-nine.

HENRY BELL.
JAMES BELL.
JOSEPH JAMES COLEMAN.

Signed and sealed by the said James Bell, and by the said Joseph James Coleman, in the presence of—

EDMUND HUNT.
LOCK MOORE.

Signed and sealed by the said Henry Bell, in the presence of—

BRISTOW HUNT.
CHAS. AUBREY DAY.

This is the specification, marked A, referred to in the annexed Letters of Registration granted to Henry Bell, James Bell, and Joseph James Coleman, this seventeenth day of October, A.D. 1879.

AUGUSTUS LOFTUS.

REPORT.

Sir,

Sydney, 26 September, 1879.

The application of Messrs. Henry and James Bell and J. J. Coleman, for Letters of Registration for "Improvements in processes and apparatus or arrangements for cooling and regulating the temperature and dryness of air in holds, saloons, &c.," having been referred to us, we have examined the specification and drawings accompanying the same, and have now the honor to report that we see no objection to the issue of Letters of Registration as prayed for.

We have, &c.,
J. SMITH.
CHAS. WATT.

The Principal Under Secretary.

[Drawings—five sheets.]

FIG. 1.

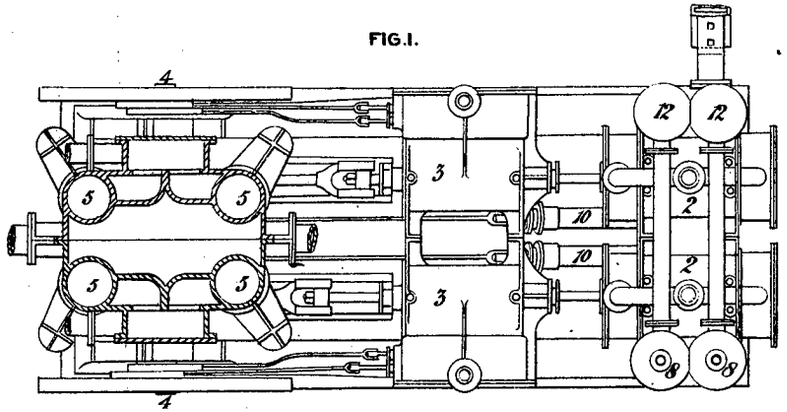

FIG. 2.

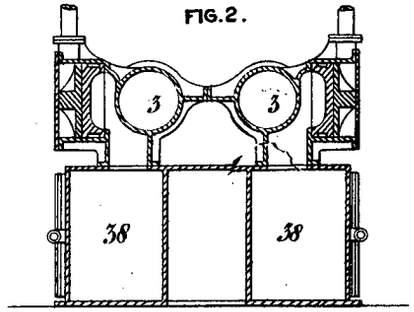

FIG. 6.

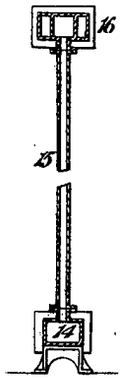

FIG. 7.

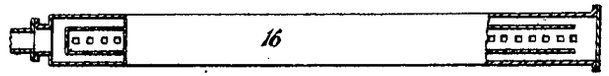

FIG. 3.

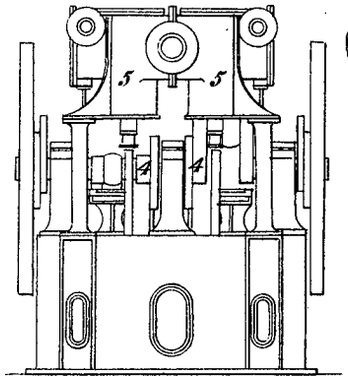

FIG. 4.

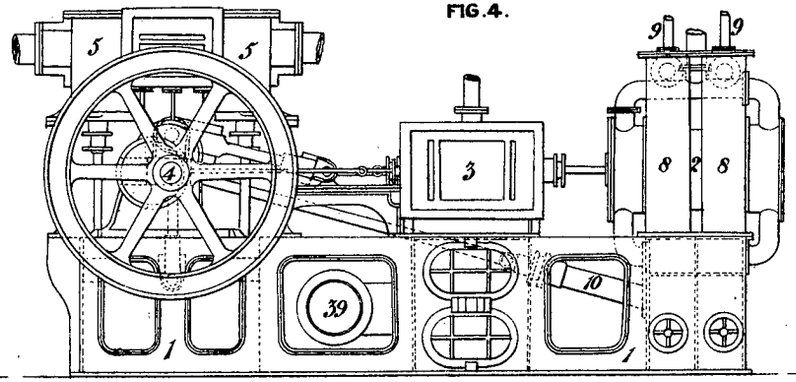

FIG. 5.

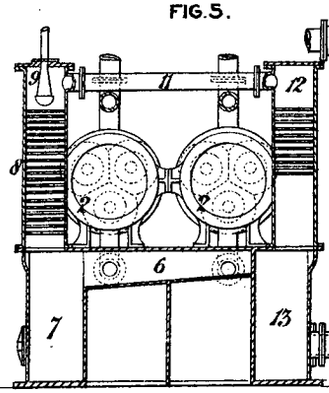

FIG. 8.

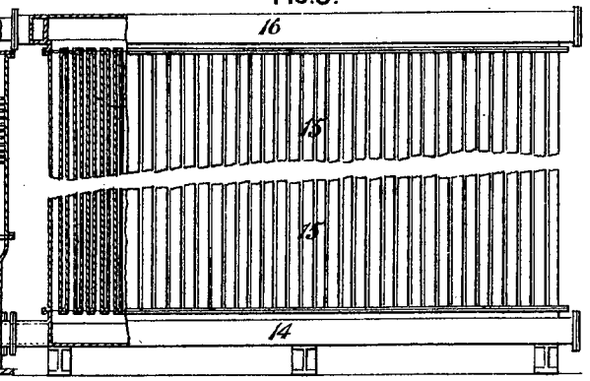

Henry Bell
James Bell
Joseph James Coleman

This is the Sheet of Drawings marked "B" referred to in the annexed Letters of Registration granted to Henry Bell James Bell and Joseph James Coleman this seventeenth day of October A.D. 1879.

(Sig: 198)

"Augustus Loftus"

PHOTO-LITHOGRAPHED AT THE GOVT. PRINTING OFFICE, SYDNEY, NEW SOUTH WALES.

FIG. 9.

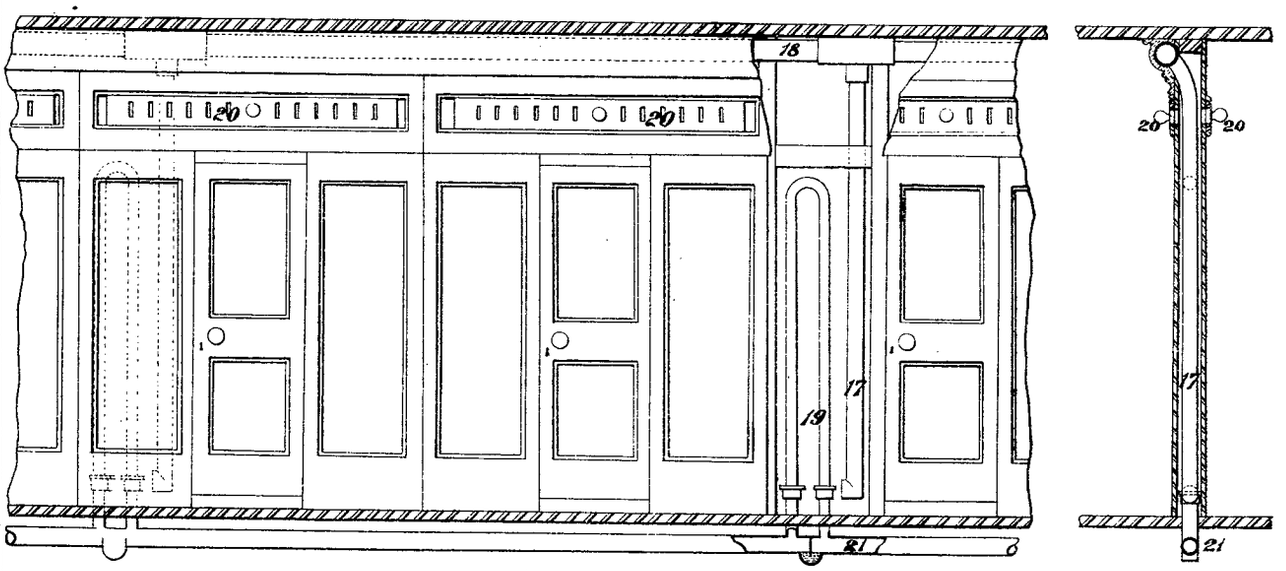

FIG. 10.

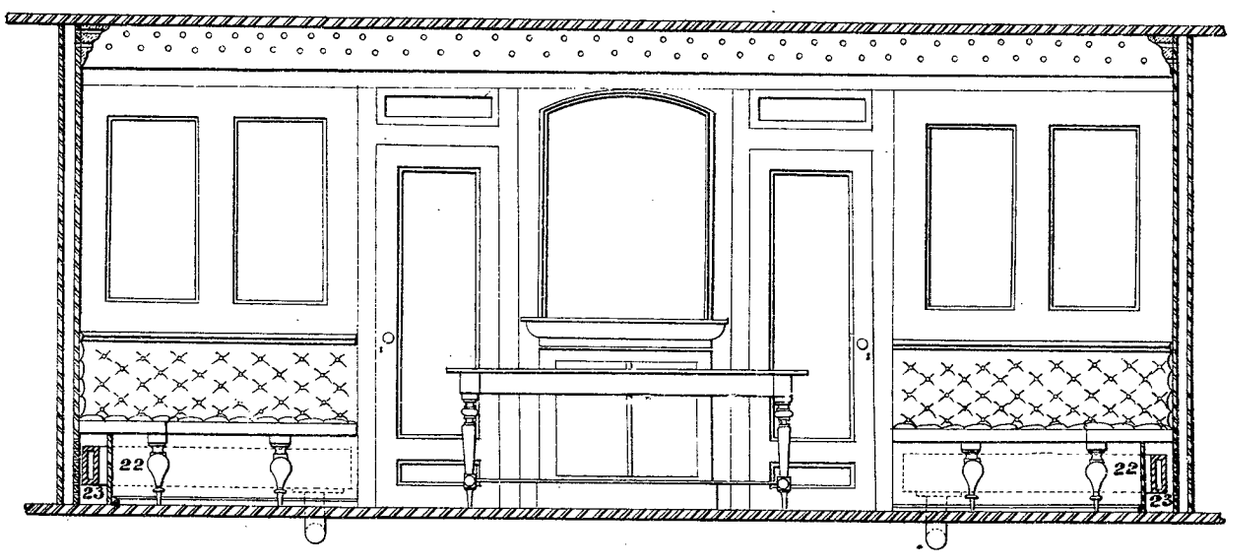

FIG. 11.

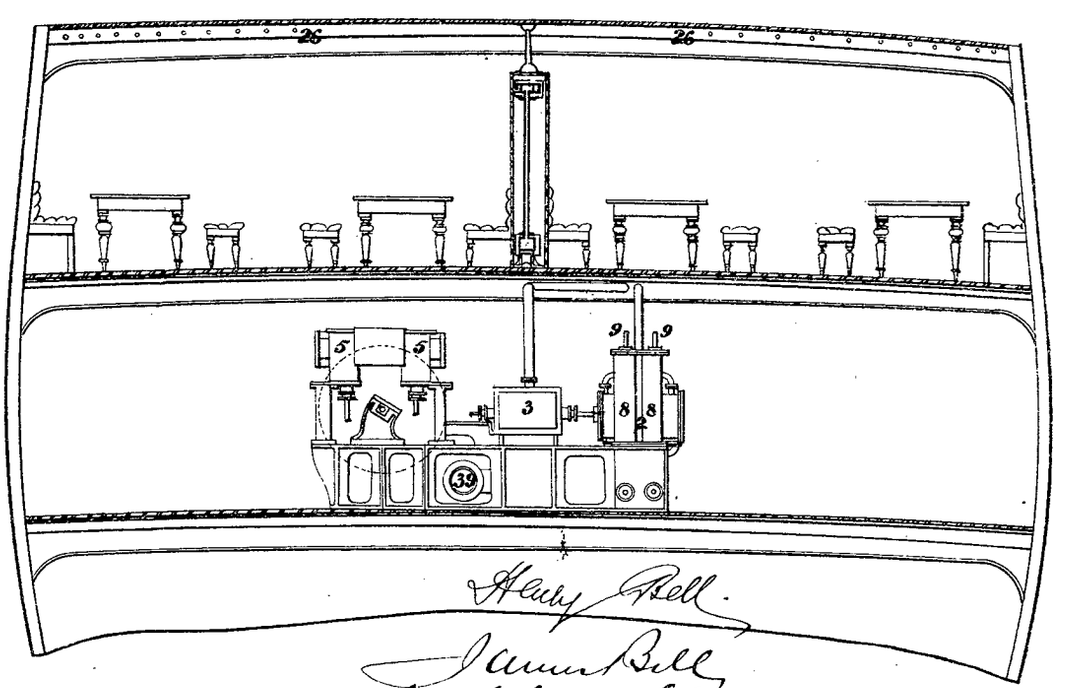

Henry Bell.

James Bell

Joseph James Coleman

This is the Sheet of Drawings marked "C" - referred to in the annexed Letters of Registration granted to Henry Bell James Bell and Joseph James Coleman this seventeenth day of October A.D. 1879

(Sig. 198-)

"Augustus Loftus"

PHOTO-LITHOGRAPHED AT THE GOVT. PRINTING OFFICE, SYDNEY, NEW SOUTH WALES.

FIG. 12.

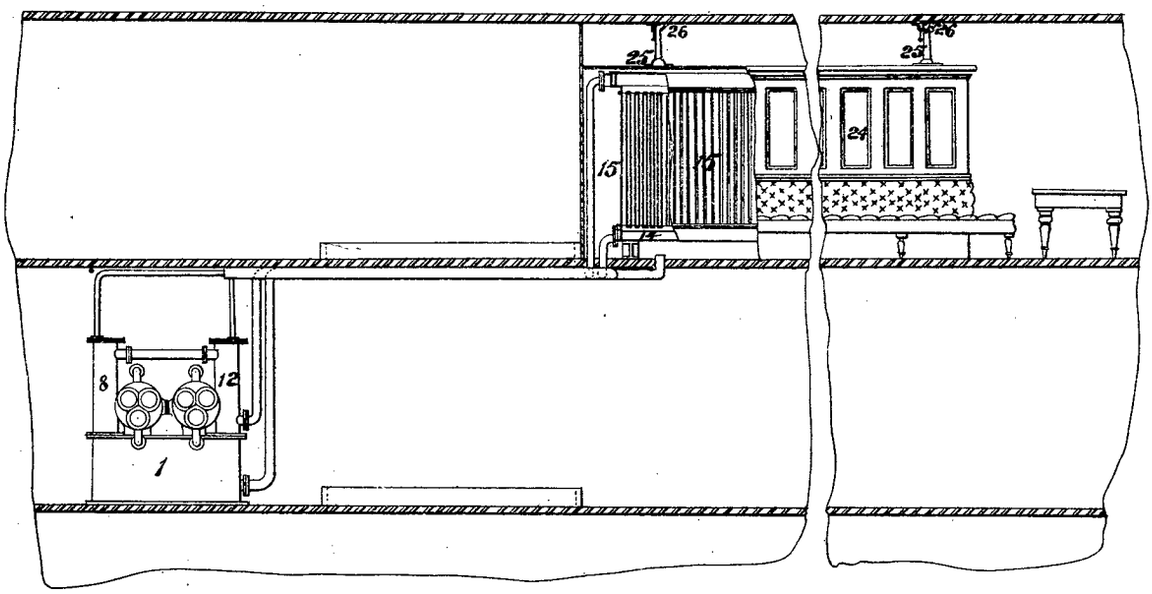

FIG. 13

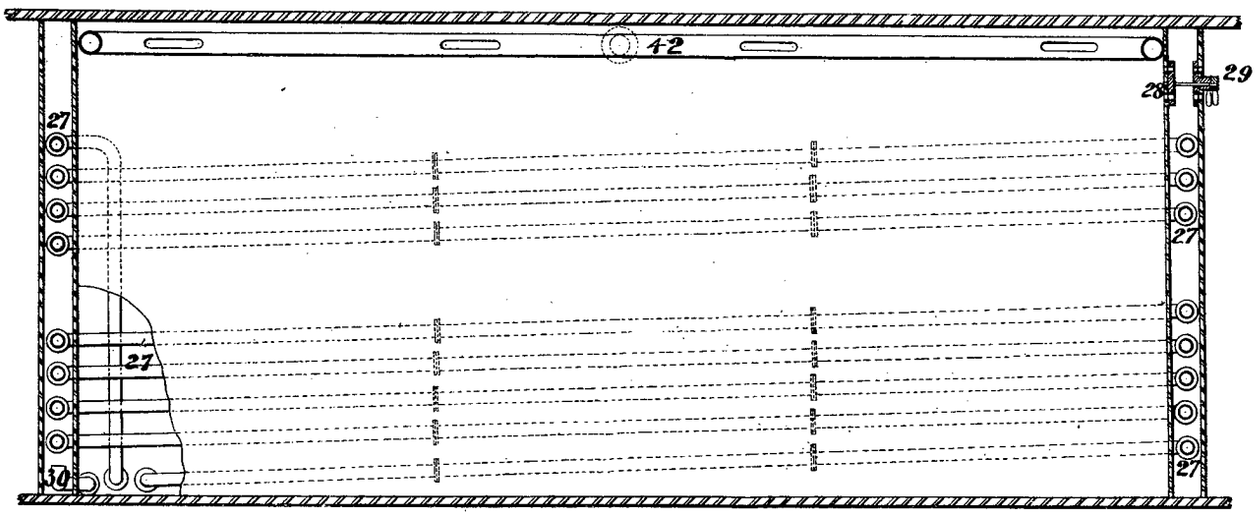

FIG. 14.

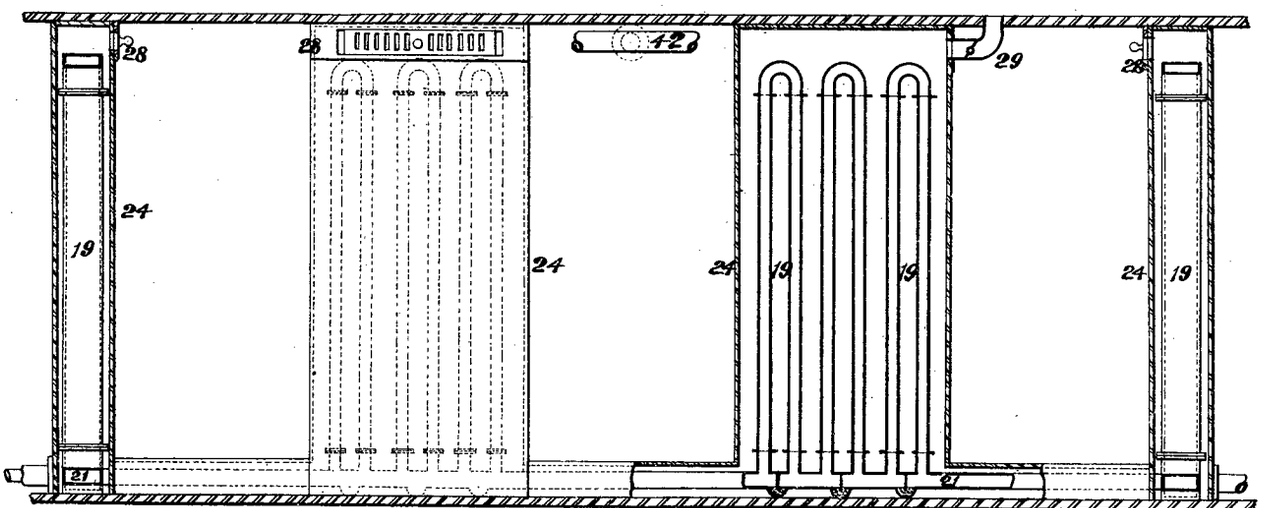

Henry Bell.
James Bell
Joseph James Coleman

This is the sheet of Drawings marked "D" referred to in the annexed Letters of Registration granted to Henry Bell James Bell and Joseph James Coleman this seventeenth day of October A.D. 1879.

(Sig. 198-)

"Augustus Loftus"

PHOTO-LITHOGRAPHED AT THE GOVT. PRINTING OFFICE, SYDNEY, NEW SOUTH WALES.

FIG. 15.

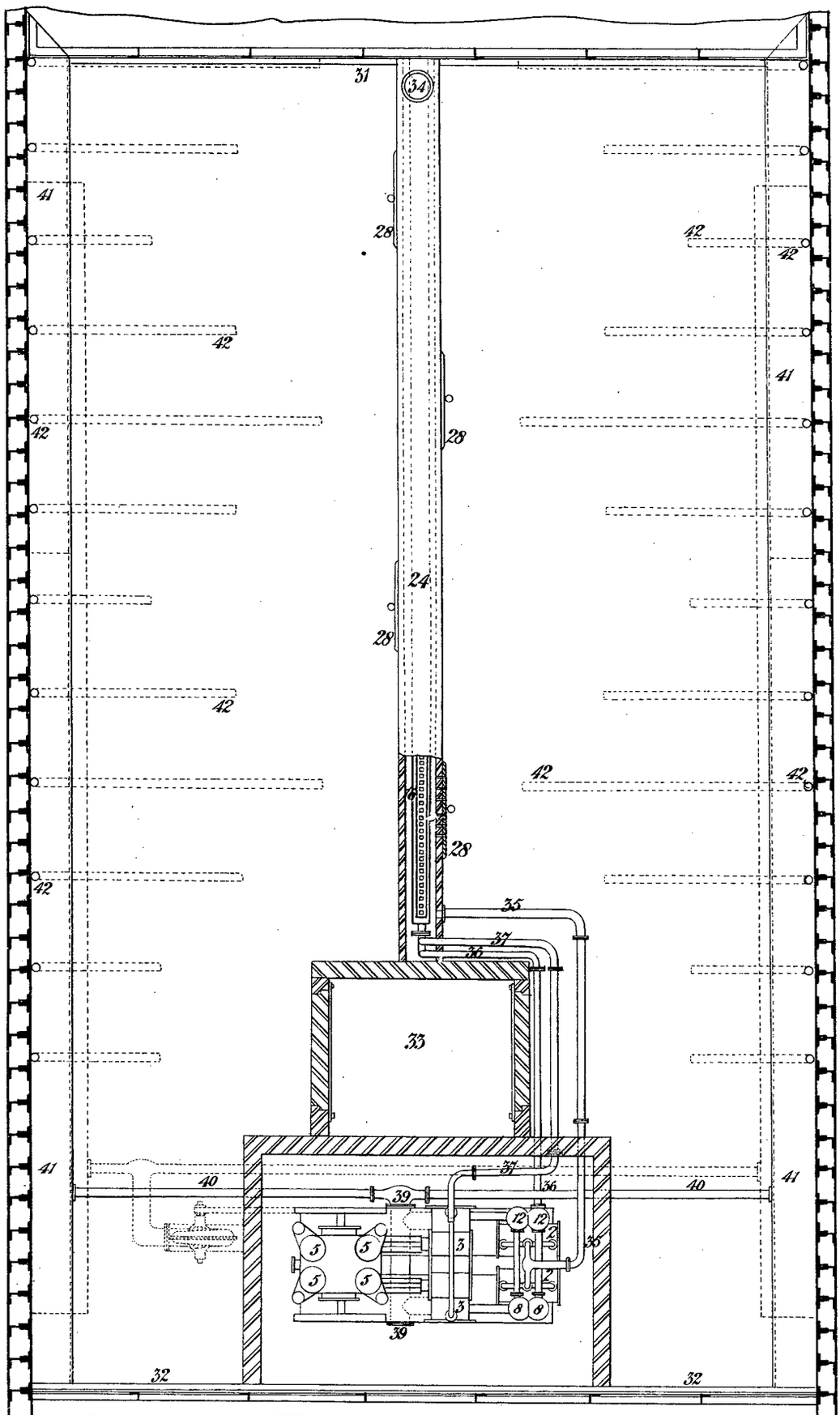

Henry Bell. James Bell Joseph James Coleman

This is the Sheet of Drawings marked "E" referred to in the annexed Letters of Registration granted to Henry Bell James Bell and Joseph James Coleman this Seventeenth Day of October A.D. 1879 -

(Sig. 198-)

Signature Lofting

PHOTO-LITHOGRAPHED AT THE GOVT. PRINTING OFFICE, SYDNEY, NEW SOUTH WALES.

FIG.16.

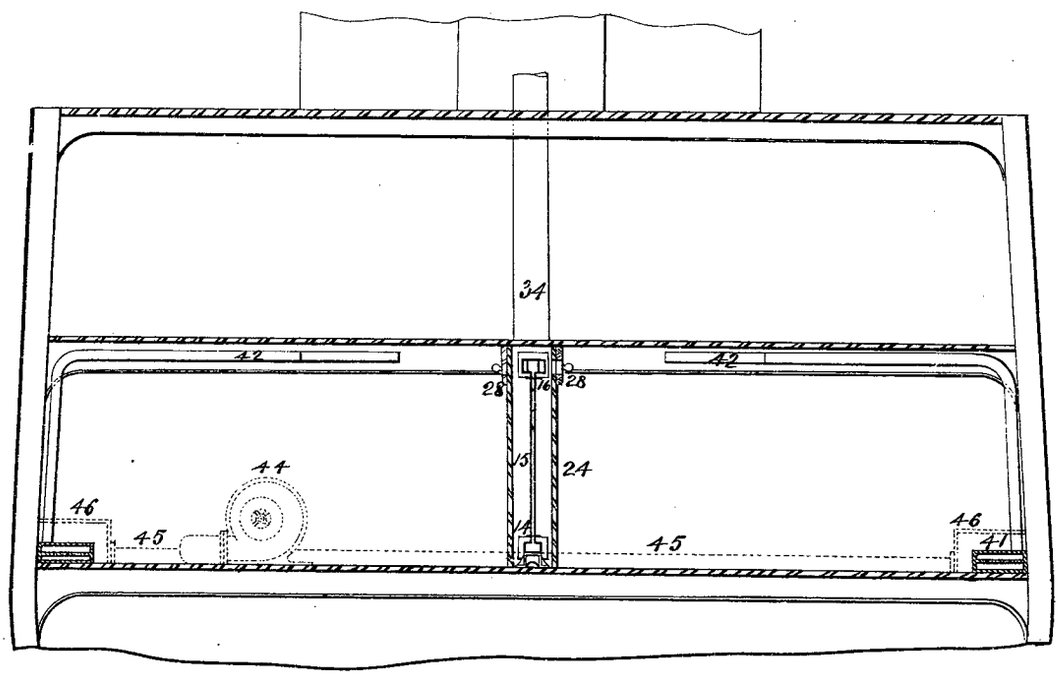

FIG.17.

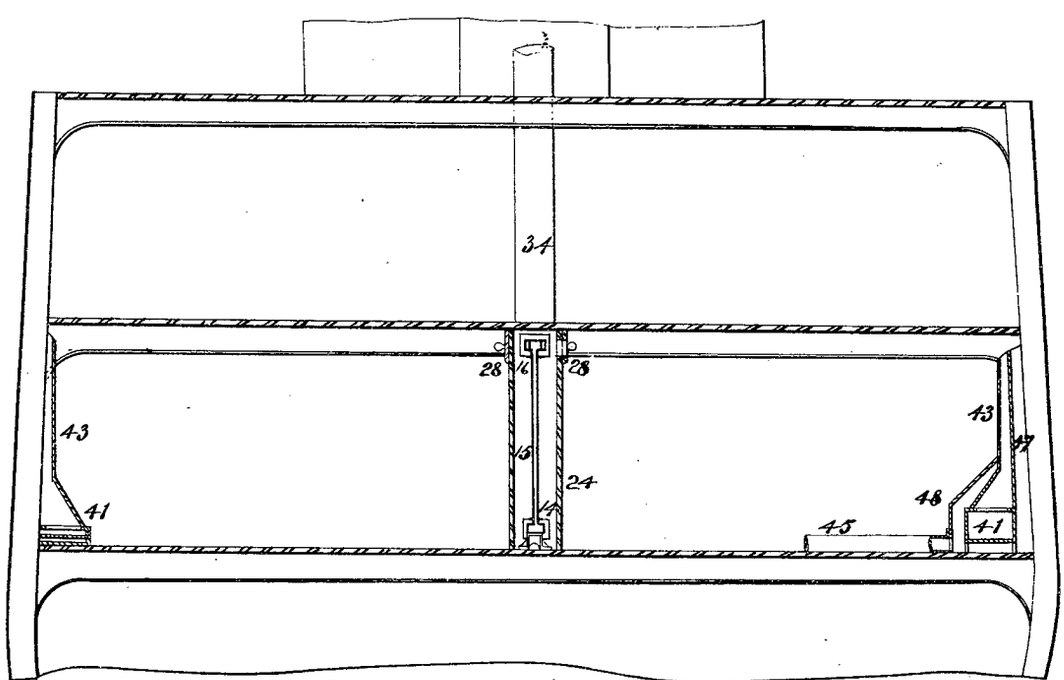

Henry Bell.
James Bell
Joseph James Coleman

This is the Sheet of Drawings marked "F" referred to in the annexed Letters of Registration granted to Henry Bell James Bell and Joseph James Coleman this Seventeenth Day of October A.D. 1879.
(Sig. 198.)

"Augustus Loftus"

PHOTO-LITHOGRAPHED AT THE GOVT. PRINTING OFFICE, SYDNEY, NEW SOUTH WALES.

A.D. 1879, 17*th October*. No. 772.

HOSKINS & LARKIN'S SELF-ACTING HYDRAULIC WOOL OR CHAFF PRESS.

LETTERS OF REGISTRATION to George John Hoskins and Patrick Ryan Larkin, for a Self-acting Hydraulic Wool or Chaff Press.

[Registered on the 18th day of October, 1879, in pursuance of the Act 16 Vic. No. 24.]

BY HIS EXCELLENCY THE RIGHT HONORABLE SIR AUGUSTUS WILLIAM FREDERICK SPENCER LOFTUS (commonly called LORD AUGUSTUS LOFTUS), Knight Grand Cross of the Most Honorable Order of the Bath, a Member of Her Majesty's Most Honorable Privy Council, Governor and Commander-in-Chief of the Colony of New South Wales and its Dependencies.

TO ALL TO WHOM THESE PRESENTS SHALL COME, greeting:

WHEREAS GEORGE JOHN HOSKINS, engineer, and PATRICK RYAN LARKIN, produce merchant, both of Sydney, in the Colony of New South Wales, have by their Petition humbly represented to me that they are the authors or designers of a certain invention or improvement in manufactures, that is to say, of an invention of a "Self-acting Hydraulic Wool or Chaff Press," which is more particularly described in the specification and the sheet of drawings which are hereunto annexed; and that they, the said Petitioners, have deposited with the Honorable the Treasurer of the said Colony of New South Wales the sum of Twenty Pounds sterling, for defraying the expense of granting these Letters of Registration, as required by the Act of Council, sixteenth Victoria, number twenty-four; and have humbly prayed that I would be pleased to grant Letters of Registration, whereby the exclusive enjoyment and advantage of the said invention or improvement might be secured to them for a period of fourteen years: And I, being willing to give encouragement to all inventions and improvements in the arts or manufactures which may be for the public good, and having received a report favourable to the prayer of the said Petition, from competent persons appointed by me to examine and consider the matters stated therein and to report thereon for my information, am pleased, with the advice of the Executive Council, and in exercise of the power and authority given to me by the said Act of Council, to grant, and do by these Letters of Registration grant unto the said George John Hoskins and Patrick Ryan Larkin, their executors, administrators, and assigns, the exclusive enjoyment and advantage of the said invention or improvement, for and during the term of fourteen years from the date hereof; to have, hold, and exercise unto the said George John Hoskins and Patrick Ryan Larkin, their executors, administrators, and assigns, the exclusive enjoyment and advantage thereof, for and during and unto the full end and term of fourteen years from the date of these presents next and immediately ensuing, and fully to be complete and ended: Provided always, that if the said George John Hoskins and Patrick Ryan Larkin shall not, within three days after the granting of these Letters of Registration, register the same in the proper office in the Supreme Court, at Sydney, in the said Colony of New South Wales, then these Letters of Registration, and all advantages whatsoever hereby granted, shall cease and become void.

In witness whereof, I have hereunto set my sign manual, and have caused the present Letters of Registration to be sealed with the seal of the said Colony of New South Wales, at Government House, Sydney, in New South Wales, this seventeenth day of October, in the year of our Lord one thousand eight hundred and seventy-nine.

[L.S.] AUGUSTUS LOFTUS.

Hoskins and Larkin's Self-acting Hydraulic Wool or Chaff Press.

SPECIFICATION.

HOSKINS & LARKIN'S Self-acting Hydraulic Wool or Chaff Press.

No. 1 represents wool-press, driven by double-acting pumps with fast and loose pulleys; casing of ram, for economy of room, is sunk into ground. Top box is supported by balance weight as shown, for convenience of packing wool in box. Bottom box is on wheels, and runs on rails on to bottom platen; this box opens at opposite corners, as shown in No. 3.

The pumps are set in motion by raising weighted lever; when the wool is pressed into bales and goes up to catch D, the lever at C is lifted which throws off the belt and opens escape-valve at foot of lever F.

A sketch of this valve is shows at A. When the bottom platen in its return is within three inches of bottom and touches lever G, the governor F acts upon valve and eases the ram down gently.

The pumps are supplied from a 15-gallon iron tank, and the water is pumped under ram, and discharges into tank again when used.

The valve A is a special equilibrium valve, bottom portion being ringed with leather at B.

No. 2 is same in construction as No. 1, with exception of having chaff bin and elevator.

Top platen works on a knuckle joint, and is thrown in position by raising starting lever same as mentioned in No. 1 press.

GEORGE JOHN HOSKINS.
PATRICK RYAN LARKIN.

This is the specification referred to in the annexed Letters of Registration granted to George John Hoskins and Patrick Ryan Larkin, this seventeenth day of October, A.D. 1879.

AUGUSTUS LOFTUS.

REPORT.

Sir, Sydney, 25 September, 1879.

We do ourselves the honor to state that we see no objection to the issue of Letters of Registration in favour of Messrs. George John Hoskins and Patrick Ryan Larkin for an invention described as a "Self-acting Hydraulic Wool or Chaff Press," in accordance with the Petition, specification, and drawings transmitted for our report under your blank cover communication of the 19th instant, No. 7,292.

We have, &c.,
GOTHER K. MANN.
JOHN WHITTON.

The Principal Under Secretary.

[Drawings—one sheet.]

A.D. 1879, 17*th October*. No. 773.

APPARATUS FOR PRODUCING ILLUMINATING GAS.

LETTERS OF REGISTRATION to William Thomas Crockford and Richard Cashin, for an Apparatus for producing Illuminating Gas by the mixture of atmospheric air with the vapour of liquid hydro-carbons.

[Registered on the 18th day of October, 1879, in pursuance of the Act 16 Vic. No. 24.]

BY His Excellency the Right Honorable Sir Augustus William Frederick Spencer Loftus (commonly called Lord Augustus Loftus), Knight Grand Cross of the Most Honorable Order of the Bath, a Member of Her Majesty's Most Honorable Privy Council, Governor and Commander-in-Chief of the Colony of New South Wales and its Dependencies.

TO ALL TO WHOM THESE PRESENTS SHALL COME, greeting:

WHEREAS William Thomas Crockford and Richard Cashin, both of Sydney, in the Colony of New South Wales, have by their Petition humbly represented to me that they are the authors or designers of a certain invention or improvement in manufactures, that is to say, of an invention of an "Apparatus for producing Illuminating Gas by the mixture of atmospheric air with the vapour of liquid hydro-carbons," which is more particularly described in the amended specification and the sheet of drawings which are hereunto annexed; and that they, the said Petitioners, have deposited with the Honorable the Treasurer of the said Colony of New South Wales the sum of Twenty Pounds sterling, for defraying the expense of granting these Letters of Registration, as required by the Act of Council, sixteenth Victoria, number twenty-four; and have humbly prayed that I would be pleased to grant Letters of Registration, whereby the exclusive enjoyment and advantage of the said invention or improvement might be secured to them for a period of fourteen years: And I, being willing to give encouragement to all inventions and improvements in the arts or manufactures which may be for the public good, and having received a report favourable to the prayer of the said Petition, from competent persons appointed by me to examine and consider the matters stated therein and to report thereon for my information, am pleased, with the advice of the Executive Council, and in exercise of the power and authority given to me by the said Act of Council, to grant, and do by these Letters of Registration grant unto the said William Thomas Crockford and Richard Cashin, their executors, administrators, and assigns, the exclusive enjoyment and advantage of the said invention or improvement, for and during the term of fourteen years from the date hereof; to have, hold, and exercise unto the said William Thomas Crockford and Richard Cashin, their executors, administrators, and assigns, the exclusive enjoyment and advantage thereof, for and during and unto the full end and term of fourteen years from the date of these presents next and immediately ensuing, and fully to be complete and ended: Provided always, that if the said William Thomas Crockford and Richard Cashin shall not, within three days after the granting of these Letters of Registration, register the same in the proper office in the Supreme Court, at Sydney, in the said Colony of New South Wales, then these Letters of Registration, and all advantages whatsoever hereby granted, shall cease and become void.

In witness whereof, I have hereunto set my sign manual, and have caused the present Letters of Registration to be sealed with the seal of the said Colony of New South Wales, at Government House, Sydney, in New South Wales, this seventeenth day of October, in the year of our Lord one thousand eight hundred and seventy-nine.

[L.S.] AUGUSTUS LOFTUS.

Apparatus for producing Illuminating Gas.

SPECIFICATION.

TO ALL TO WHOM THESE PRESENTS SHALL COME, We, WILLIAM THOMAS CROCKFORD and RICHARD CASHIN, of Sydney, in the Colony of New South Wales, send greeting:

WHEREAS we are the authors and inventors of an apparatus for producing an illuminating gas, and are desirous of obtaining Letters Patent, securing to us Her Majesty's special license that we, our executors, administrators, or assigns, or such others as we, our executors, administrators, or assigns, may at any time agree with, and no others, may use, exercise, or vend the same in the Colony of New South Wales, during the term of fourteen years succeeding the date at which this instrument is left at the office of the Colonial Secretary, Sydney: And whereas, in order to obtain the said Letters Patent, it is necessary that we particularly ascertain and describe the nature of our invention, and the manner in which its operations are performed: Now know ye that we, William Thomas Crockford and Richard Cashin, do hereby describe the nature of our invention, and the manner in which its operations are performed, in the following description, reference being had to the drawing hereunto annexed, and the letters and figures thereon, indicating the parts referred to and here explained.

Our invention consists of an apparatus for producing illuminating gas from liquid hydro-carbon by evaporation; the vapour of such hydro-carbons being mixed with common or atmospheric air in the apparatu in such proportions as to render the resulting gas illuminating.

Figure 1 represents a side view of the apparatus partly in section, in order to show the parts more clearly. Figure 2 represents a ground plan of the whole apparatus, shown partly in section. The same letters apply to the same parts in both views. A A is a framework for carrying the apparatus. B is a bellows or air-pump. C is a generator or carburator. D is a pipe from bellows B to the carburator C; it is perforated in coil at the bottom of carburator, and the end is closed and also perforated. E is an evaporating chamber. F is a pipe from top of generator C into evaporating chamber E; the portion at the bottom of chamber being perforated and the end left open. G is an evaporating chamber. H is a pipe from the evaporating chamber E to the chamber G. I is a pipe from evaporating chamber G to main service pipe. J^1 J^2 are gas-holders over chambers E and G. K^1 K^2 are water seals for gas-holders J^1 and J^2. LLL are plug-holes for charging the chambers and generators with liquid hydro-carbon. M M are guide rods for gas-holders. N N are lines for carrying the balance-weights of holders. O O are sheaves for carrying the balance lines. P^1 P^2 are movable balance weights. Q Q are warm water pans, so arranged as to bring the water into contact with the bottom of chambers. R R is a wire network across the chambers E and G. S^1 S^2 are lines of cotton or other material, suspended from network R R, and reaching to the bottom of the chambers. *a* is a gauge-glass in carburator C. *b* is a cock on the pipe F. *c* is a cock on the pipe F, with a nozzle, open to the air. *d* is a cock on the pipe H. *e* is a union for connecting and disconnecting pipe H. *f* is a union for connecting and disconnecting pipe I. *g g g* are the ordinary levels of the liquid hydro-carbon in the chambers C, E, and G.

Having now described the various leading portions of our apparatus, the method of its operation is as follows:—The chambers C, E, and G being charged with liquid hydro-carbon through the holes L L L, to about the levels marked *g g g*, and the plugs replaced, the holders being down to the lowest level, and the cocks marked *b* and *d* open, the bellows or air-pump B is put in operation, and forces air through the pipe D, and out through the perforations in the coil at the bottom of the carburator C; the air rises through the liquid hydro-carbon, agitating it and becoming charged with hydro-carbon gas during its ascent. This partially carburetted gas then passes through the pipe F into the chamber E, and escapes through the perforations in the pipe, and by rising through the liquid and agitating it becomes still further charged with hydro-carbon gas, the holder J^1 rising as the chamber E is filled, the water seal K^1 preventing the escape of the gas to the open air. The lines S^1 S^1, suspended from the wire grating R, acting by capillary attraction draw the liquid up, and exposing a large surface of it to the action of the partially charged gas, still further charges it with hydro-carbon vapour. The gas then passes through the pipe H from the chamber E to the chamber G, where the lines S^2 S^2 act in a similar manner to those in chamber E, and still further charge the gas with hydro-carbon vapour, the holder J^2 rising to contain the gas, and the water seal K preventing the escape of gas. The gas then passes through the pipe I to the main service, as required.

If we wish to work the apparatus without using the carburator C and the bellows or air pump B, we can do so, as follows:—By placing extra weights on the balance-weights P^1 of holder J^1, and shutting the cocks *b* and *d* to the carburator C and the chamber G, and opening the cock *c* to the air we can make the holder J^1 draw the air through the cock C and the pipe F, and up through the liquid hydro-carbon in the chamber and the air becoming charged with the gas in the manner before described. When the holder J^1 is full, the cock *c* is shut and the cock *d* opened, and some of the weights on P^1 are then removed. The weight of the holder now causes it to descend and force the gas through the pipe H into the chamber G, where it is further charged with gas in the manner before described; it then passes through the pipe I to the main service. When the holder J^1 has descended to its lowest level again, the cock *d* is again shut, the cock *c* opened, and the extra balance-weights again placed on P; the operation of filling the holder is then continued again, and so on.

During the operations above described with the chamber E, the supply of gas for the main service may be drawn continuously from chamber G.

During damp or wet weather the pans Q Q are kept filled with warm water, to assist the evaporation of the liquid hydro-carbon.

Having now described our invention, and the manner and nature of its operations, we do not confine ourselves to any particular shape or material for the framework, or shape, or size, or number of chambers or carburators, as we may use several in connection if found necessary; nor do we confine ourselves to any particular kind of bellows or air-pump, or manner of working it, but we do claim as our invention—The application of capillary lines for the purpose of exposing a large surface of liquid hydro-carbon for evaporation.

In

In witness whereof, we, William Thomas Crockford and Richard Cashin, have to this specification set our hands and seals, this nineteenth day of September, one thousand eight hundred and seventy-nine.

WM. THOS. CROCKFORD.
RICHARD CASHIN.

Witness—
C. BARNES.

This is the specification referred to in the annexed Letters of Registration granted to William Thomas Crockford and Richard Cashin, this seventeenth day of October, A.D. 1879.

AUGUSTUS LOFTUS.

REPORTS.

Sir,

Sydney, 2 September, 1879.

The application of Messrs. Crockford and Cashin, for Letters of Registration for an "Apparatus for producing Illuminating Gas" having been referred to us, we have examined the specification and drawings accompanying the same, and have now the honor to report thereon as follows:—The production of illuminating gas by drawing or forcing air through liquid hydro-carbon (which is here proposed) is familiar, and many forms of apparatus have been patented for effecting it. The only point of novelty in the apparatus here described which we are disposed to consider original is the introduction of strings of cotton or similar capillary material for drawing up the liquid, and thereby exposing a larger surface for evaporation.

If the applicants think it worth while to patent this portion of the apparatus, as stated in the third claim, we shall offer no objection, but we are of opinion that the remaining claims must be disallowed.

We have, &c.,
J. SMITH.
E. C. CRACKNELL.

The Principal Under Secretary.

Letters of Registration may be granted on the amended specification.

J. SMITH.
E. C. CRACKNELL.

22/9/79.

[Drawings—one sheet.]

Australian Novelty Illuminating Air Gas Apparatus

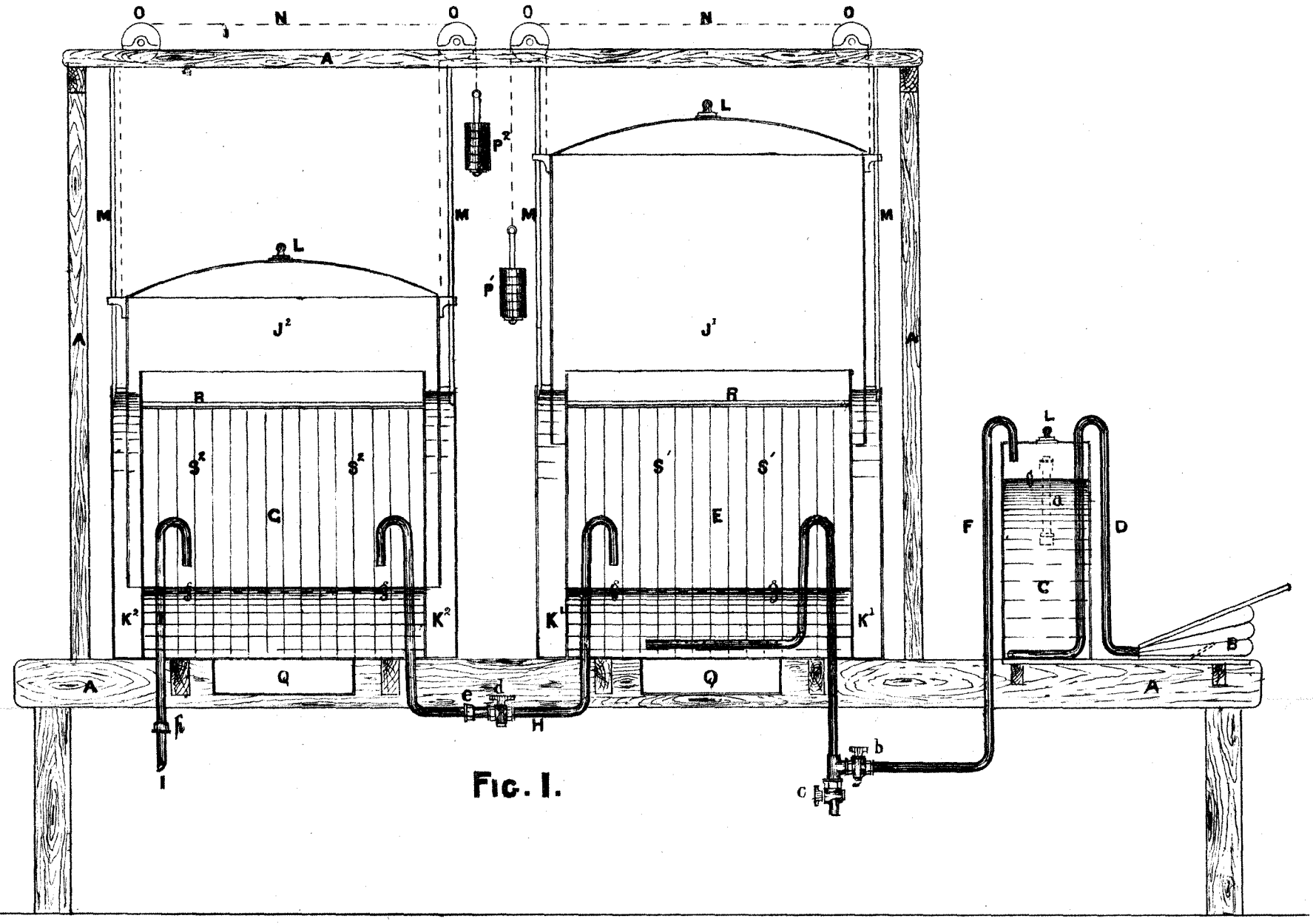

FIG. 1.

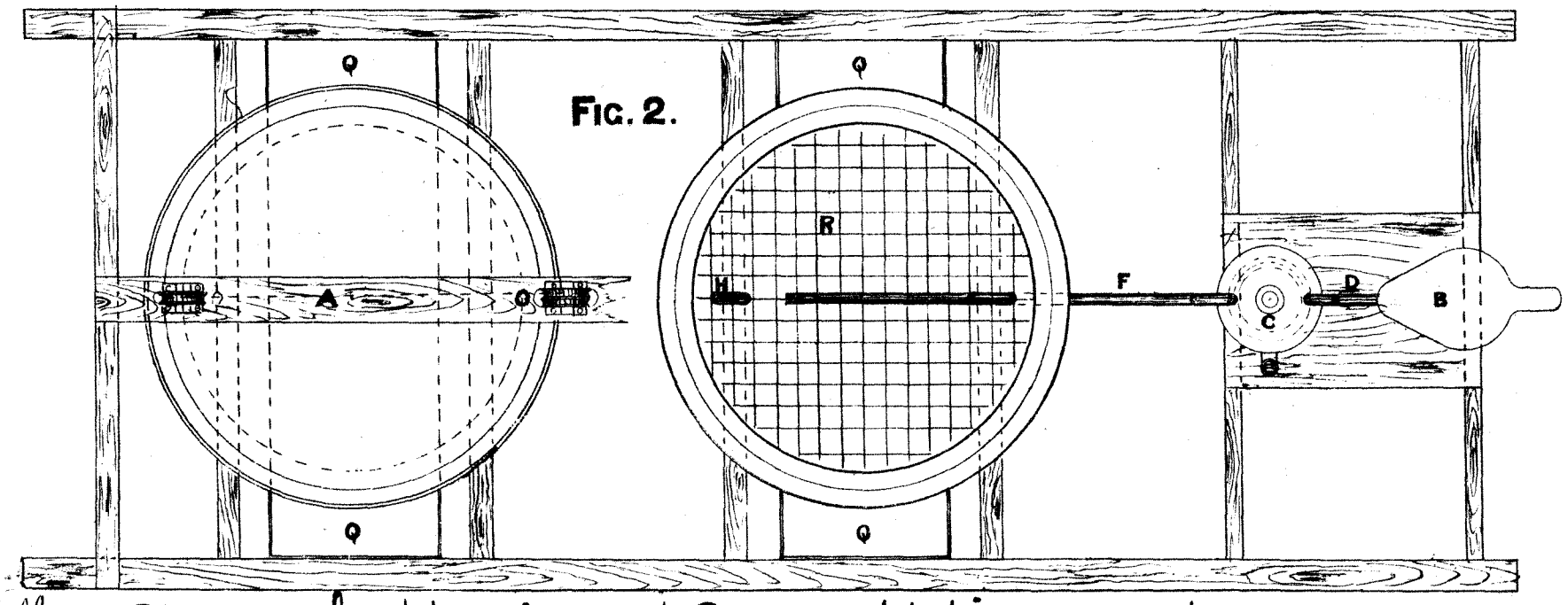

FIG. 2.

This is the Sheet of Drawings referred to in the annexed Letters of Registration granted to William Thomas Crockford and Richard Cashin this seventeenth day of October A.D. 1879
"Augustus Loftus"

(Sig. 198-)

PHOTO-LITHOGRAPHED AT THE GOVT. PRINTING OFFICE,
SYDNEY, NEW SOUTH WALES.

HOSKINS AND LARKINS

Self Acting

Hydraulic Wool or Chaff Press

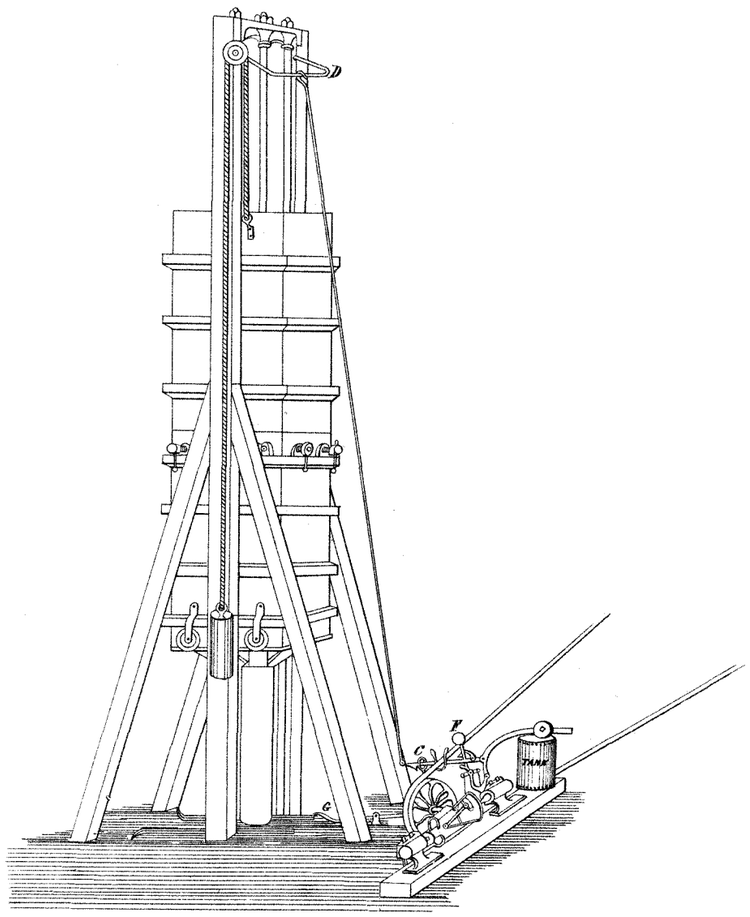

No. 1

Hydraulic Press for Wool pressing driven by Steam or Horse power.

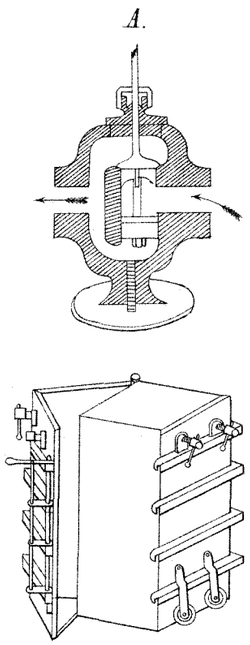

No. 3.

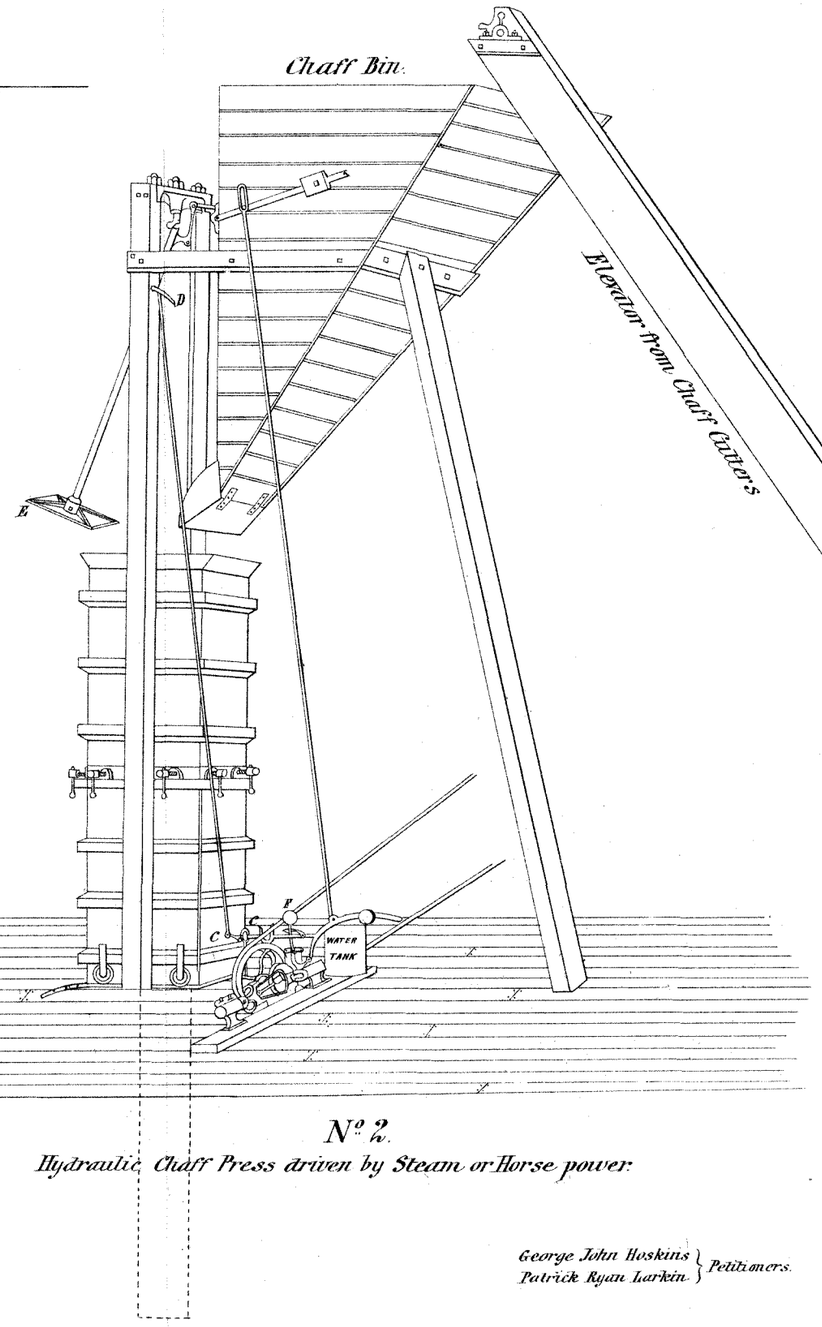

No. 2.

Hydraulic Chaff Press driven by Steam or Horse power.

This is the Sheet of Drawings referred to in the annexed letters of Registration granted to George John Hoskins and Patrick Ryan Larkin, this seventeenth day of October 1879.

Augustus Loftus.

George John Hoskins
Patrick Ryan Larkin } *Petitioners.*

Sig: 198.

PHOTO-LITHOGRAPHED AT THE GOVT. PRINTING OFFICE, SYDNEY, NEW SOUTH WALES.

A.D. 1879, 30*th October*. No. 774.

APPARATUS FOR DRESSING HIDES, SKINS, OR LEATHER.

LETTERS OF REGISTRATION to George Harrisson, for an Apparatus for dressing Hides, Skins, or Leather.

[Registered on the 30th day of October, 1879, in pursuance of the Act 16 Vic. No. 24.]

BY His Excellency the Right Honorable Sir Augustus William Frederick Spencer Loftus (commonly called Lord Augustus Loftus), Knight Grand Cross of the Most Honorable Order of the Bath, a Member of Her Majesty's Most Honorable Privy Council, Governor and Commander-in-Chief of the Colony of New South Wales and its Dependencies.

TO ALL TO WHOM THESE PRESENTS SHALL COME, greeting:

WHEREAS George Harrisson, of Camberwell, London, S.E., in England, at present residing in Sydney, New South Wales, hath by his Petition humbly represented to me that he is the author or designer of a certain invention or improvement in manufactures, that is to say, of an invention of an "Apparatus for scraping and cleaning and operating on Hides, Skins, or Leather, by means of revolving cutters or scrapers," which is more particularly described in the specification and the sheet of drawings which are hereunto annexed; and that he, the said Petitioner, hath deposited with the Honorable the Treasurer of the said Colony of New South Wales the sum of Twenty Pounds sterling, for defraying the expense of granting these Letters of Registration, as required by the Act of Council, sixteenth Victoria, number twenty-four; and hath humbly prayed that I would be pleased to grant Letters of Registration, whereby the exclusive enjoyment and advantage of the said invention or improvement might be secured to him for a period of fourteen years; and I, being willing to give encouragement to all inventions and improvements in the arts or manufactures which may be for the public good, and having received a report favourable to the prayer of the said Petition, from competent persons appointed by me to examine and consider the matters stated therein and to report thereon for my information, am pleased, with the advice of the Executive Council, and in exercise of the power and authority given to me by the said Act of Council, to grant, and do by these Letters of Registration grant unto the said George Harrisson, his executors, administrators, and assigns, the exclusive enjoyment and advantage of the said invention or improvement, for and during the term of fourteen years from the date hereof; to have, hold, and exercise unto the said George Harrisson, his executors, administrators, and assigns, the exclusive enjoyment and advantage thereof, for and during and unto the full end and term of fourteen years from the date of these presents next and immediately ensuing, and fully to be complete and ended: Provided always, that if the said George Harrisson shall not, within three days after the granting of these Letters of Registration, register the same in the proper office in the Supreme Court, at Sydney, in the said Colony of New South Wales, then these Letters of Registration, and all advantages whatsoever hereby granted, shall cease and become void.

In witness whereof, I have hereunto set my sign manual, and have caused the present Letters of Registration to be sealed with the seal of the said Colony of New South Wales, at Government House, Sydney, in New South Wales, this thirtieth day of October, in the year of our Lord one thousand eight hundred and seventy-nine.

[L.S.] AUGUSTUS LOFTUS.

Apparatus for dressing Hides, Skins, or Leather.

SPECIFICATION.

TO ALL TO WHOM THESE PRESENTS SHALL COME, I, GEORGE HARRISSON, of Camberwell, London, S.E., in England, send greeting :

WHEREAS I am the author and inventor of an apparatus for scraping and cleaning and operating on hides skins, or leather, and am desirous of obtaining Letters Patent securing to me Her Majesty's special license that I, my executors, administrators, or assigns, or such others as I, my executors, administrators, or assigns, may from time to time agree with, and no others, may use, exercise, or vend the same in the Colony of New South Wales, during the term of fourteen years succeeding the date at which this instrument is left at the office of the Colonial Secretary, Sydney : And whereas, in order to obtain the said Letters Patent, it is necessary that I particularly ascertain and describe the nature of my invention, and the manner in which its operations are performed :

Now know ye that I, George Harrisson, do hereby describe the nature of my invention and the manner in which its operations are performed, in the following description, reference being had to the drawing hereunto annexed, and the letters and figures thereon indicating the parts referred to and here explained.

My invention consists of a machine for scraping, cleaning, and preparing hides and skins, and also for dressing and finishing leather, by means of revolving cylinders, carrying knives for scraping, slicking, finishing, or performing any other process required, the hides, skins, or leather being drawn past the knives in such a manner that any flesh or other superfluous matter on the hide or skin can be cut, scraped, or removed, and any description of leather prepared, smoothed, or finished.

Fig. 1 is a sectional elevation of the machine.

Fig. 2 is an end elevation of the machine, one half shown in section.

Fig. 3 is a ground plan of the machine.

A is the general framework of the machine.

B is a cylinder or barrel with knives or scrapers on the periphery curved spirally right and left handed from the centre towards the end of the cylinder in the manner shown in the drawing, these knives being formed of steel, copper, or other metal, and of the shape or form required for the different processes to be performed.

C is the shaft for carrying the knife cylinder B.

DD are adjustable bearings on the frame A for carrying cylinder shaft C.

EE are pulleys for the driving-belt fast and loose respectively on the shaft C.

F is a roller sheathed with india-rubber.

H is a frame or table hinged to the main frame at *a a*, and carrying the roller F.

I is a triangular-shaped link connected to the main frame or table H by hinges at *b b*, and to the foot-lever J at *c*.

J is a foot-lever or treadle hinged near its centre and working on the pin in plate K as a fulcrum, and connected to triangular link I at *c*.

K is a sole-plate or support for carrying the lever J.

LL are counterbalance levers working on pins or fulcrums at *dd*, and acting on the underside of frame H.

MM are balance weights on the ends of levers LL.

NN are guide rods connected at their inner ends to the main frame A, and supported at their outer ends by brackets OO.

OO are brackets from main frame A for supporting the guide rods NN.

P is a clip or clencher supported by and travelling on guide-rods NN.

QQ are handles jointed to one half of the clip or clencher, and working through a slot in the other half. They are formed with cams to close the clip or clencher, and enable it to grasp and hold the hide or skin.

R is a handle on the clip or clencher P, by which it can be moved or opened.

S is a table across the top of frame A.

T is an adjusting screw on treadle J to regulate the motion of roller F.

Having now described the various portions of my machine, the method of its operation is as follows :—

The set screw T being adjusted so that the roller F can approach no closer than required to the knife cylinder B, the clencher or clip P is opened, and the hides, skin, or leather is inserted and grasped by closing the levers QQ, which are held by the operator, the hide, skin, or leather being then presented between the cylinder B and the roller F, and the cylinder B revolving by the motive power in the direction indicated by the arrows on the drawing, the operator's foot is placed on the treadle J; this action causes the frame H and roller F to rise and bring the hide, skin, or leather into contact with the cylinder B, when the knives draw in, and by their spiral form spread out the hide, skin, or leather, acting upon its surface as required in the process to be performed. When the operator's foot is removed from the treadle the roller F falls and lowers the hide, skin, or leather from the knives. The clencher is then drawn backwards by the operator, and on pressing the treadle the action of the rollers again draws it forward, and this operation is carried on until the desired effect is produced upon that portion of the hide, skin, or leather submitted to the action of the knives on cylinder B. The lever on treadle is then released and the clencher opened, when the hide, skin, or leather is taken out and reversed. The process is then repeated, and the remaining part of its surface acted on as before.

The knives on the cylinder B are formed with either plain wire or blunt edges, and of the material most suitable for the different operations to be performed. These cylinders are changed for the various kind of work by removing the covers of the bearings D.

In heavy work I attach a screw, rack, rope, or any mechanical device or devices to the clencher or clip, and drive the same by friction gear from an extension of the knife-cylinder shaft, a lever regulating this friction gear being brought within reach of the operator's hand in such a way that on the gear being put into motion the clencher, and with it the hide, skin, or leather, is drawn back from the action of the knife-cylinder, and on the release of this lever the hide, skin, or leather is again drawn in by the knife-cylinder and rubber roller, such operation being repeated as many times as may be desired. Having

Apparatus for dressing Hides, Skins, or Leather.

Having now described my invention and the manner of its operation, I claim for my invention—

Firstly—The general arrangement of the machine.

Secondly—The use of knives arranged around a cylinder in reverse spirals, as shown and described, either plain knife, wire-edged, or blunt.

Thirdly—The use of a roller covered with india-rubber for a beam.

Fourthly—The treadle and adjusting screw to bring the hide, skin, or leather on the roller into contact with the knives and regulate the action of the same.

Fifthly—The arrangement of the clip or clencher for holding the leather, hide, or skin, having a motion to and from the cylinder and roller, such motion being given either by hand or by the application of motive power.

In witness whereof, I, George Harrisson, have to this specification set my hand and seal, this nineteenth day of September, one thousand eight hundred and seventy-nine.

GEORGE HARRISSON.

This is the specification referred to in the annexed Letters of Registration granted to George Harrisson, this thirtieth day of October, A.D. 1879.

AUGUSTUS LOFTUS.

REPORT.

Sir,

Sydney, 29 September, 1879.

We have the honor to return herewith the papers having reference to the application of Mr. George Harrisson for Letters of Registration for an "Invention for dressing Hides, Skins, or Leather by means of revolving cutters or rollers." Having considered the specification and drawings, we recommend that the application be granted.

We have, &c.,

CHAS. WATT.

THOS. RICHARDS.

The Principal Under Secretary.

[Drawings—one sheet.]

FIG. 1.

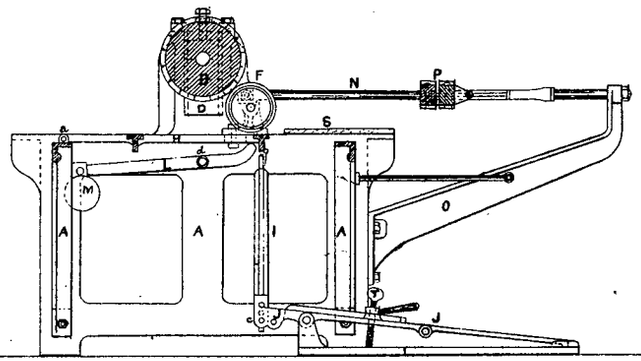

FIG. 2.

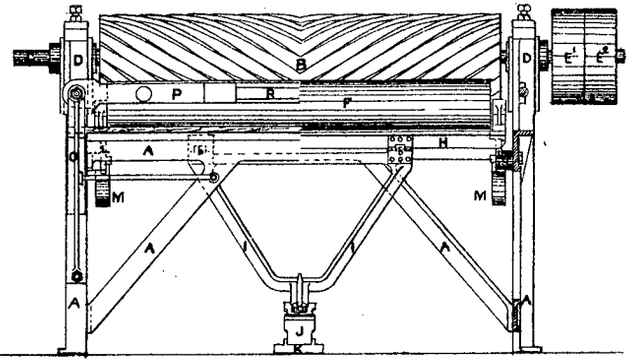

FIG. 3.

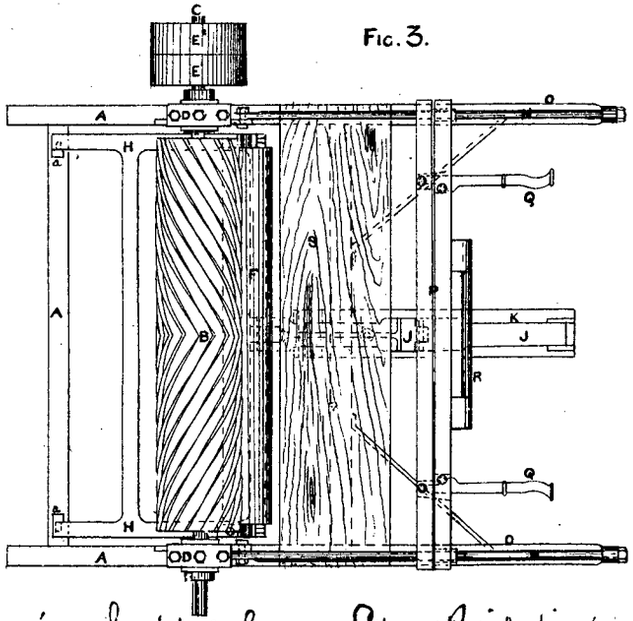

This is the Sheet of Drawings referred to in the annexed Letters of Registration granted to George Harrisson this thirtieth day of October A.D. 1879.

"Augustus Loftus."

(Sig. 1959)

PHOTO-LITHOGRAPHED AT THE GOVT. PRINTING OFFICE, SYDNEY, NEW SOUTH WALES.

A.D. 1879, *3rd November.* No. 775.

IMPROVEMENTS IN STEAM-VESSELS.

LETTERS OF REGISTRATION to Robert Wilcox, for Improvements in Steam-vessels.

[Registered on the 4th day of November, 1879, in pursuance of the Act 16 Vic. No. 24.]

BY His Excellency the Right Honorable Sir Augustus William Frederick Spencer Loftus (commonly called Lord Augustus Loftus), Knight Grand Cross of the Most Honorable Order of the Bath, a Member of Her Majesty's Most Honorable Privy Council, Governor and Commander-in-Chief of the Colony of New South Wales and its Dependencies.

TO ALL TO WHOM THESE PRESENTS SHALL COME, greeting:

WHEREAS Robert Wilcox, of Fawkner-street, St. Kilda, near Melbourne, in the Colony of Victoria, gentleman, hath by his Petition humbly represented to me that he is the author or designer of a certain invention or improvement in manufactures, that is to say, of an invention intituled "Improvements in Steam-vessels," which is more particularly described in the specification, marked A, and the three sheets of drawings, marked B, C, and D, respectively, which are hereunto annexed; and that he, the said Petitioner, hath deposited with the Honorable the Treasurer of the said Colony of New South Wales the sum of Twenty Pounds sterling, for defraying the expense of granting these Letters of Registration, as required by the Act of Council, sixteenth Victoria, number twenty-four; and hath humbly prayed that I would be pleased to grant Letters of Registration, whereby the exclusive enjoyment and advantage of the said invention or improvement might be secured to him for a period of fourteen years: And I, being willing to give encouragement to all inventions and improvements in the arts or manufactures which may be for the public good, and having received a report favourable to the prayer of the said Petition, from competent persons appointed by me to examine and consider the matters stated therein and to report thereon for my information, am pleased, with the advice of the Executive Council, and in exercise of the power and authority given to me by the said Act of Council, to grant, and do by these Letters of Registration grant unto the said Robert Wilcox, his executors, administrators, and assigns, the exclusive enjoyment and advantage of the said invention or improvement, for and during the term of fourteen years from the date hereof; to have, hold, and exercise unto the said Robert Wilcox, his executors, administrators, and assigns, the exclusive enjoyment and advantage thereof, for and during and unto the full end and term of fourteen years from the date of these presents next and immediately ensuing, and fully to be complete and ended: Provided always, that if the said Robert Wilcox, shall not, within three days after the granting of these Letters of Registration, register the same in the proper office in the Supreme Court at Sydney, in the said Colony of New South Wales, then these Letters of Registration, and all advantages whatsoever hereby granted, shall cease and become void.

In witness whereof, I have hereunto set my sign manual, and have caused the present Letters of Registration to be sealed with the seal of the said Colony of New South Wales, at Government House, Sydney, in New South Wales, this third day of November, in the year of our Lord one thousand eight hundred and seventy-nine.

[L.S.] AUGUSTUS LOFTUS.

Improvements in Steam-vessels.

A.

SPECIFICATION of ROBERT WILCOX, of Fawkner-street, St. Kilda, near Melbourne, in the Colony of Victoria, gentleman, for an invention intituled "Improvements in Steam-vessels."

THIS invention, which I call "the Ocean Palace principle of Steam-ship," consists in three distinct improvements in steam-vessels; the first of which relates to the shape of their bottom; the second, to their means of propulsion; and the third, to their means of guidance or steering.

First as to the shape of their bottom. And it must here be premised that my steam-vessels are compound vessels, connected together by means of suitable framework supporting a deck which extends right across the two vessels in a manner that is now perfectly well-known. The bottom of each of these compound vessels is made very much like the lower half of two cigars placed end on to each other, and cut in two lengthwise, the essential condition being that each end of each half-cigar shall come to a point, whilst the space between shall gradually bulge out to the centre in regular curves. To give the vessel shallow draught or increase her carrying capacity, she may be lengthened at the section shown in figure 5.

Second, as to the means of propulsion. This consists of two large flanged wheels with broad peripheries, over which there gears a series of endless steel wire ropes carrying floats or paddles, such wheels being so fixed as that the floats or paddles will work in the water between the compound half-cigar shaped vessels. These wheels are to be driven by engines placed in any suitable position. The periphery of each is covered with a thick coating of packing made in segments of thrummed mats, previously filled between their thrummed interstices with an asphaltic or other bituminous compound, and subjected to a heavy pressure. These segments are then placed on the periphery of each wheel, with ropes fastened to their underneath parts, running round on the face of the wheels. The space between the underneath parts of the segments and the face of the wheels is then filled in with pitch, causing the segments to form a solid, compact, and durable mass upon which the wire ropes carrying the floats or paddles travel. The flanges for preventing any lateral deviation of the wire ropes project outwardly at a convenient angle.

Third, as to the means of guidance or steering. My steam-vessels are capable of being driven in either direction, and consequently either end may for the time being be the stem or stern. On what is usually termed the quarter of the vessel, or just behind the widest part of each half-cigar-shaped vessel, I make a casing at right angles to the side for the reception of a rudder, which is forced out more or less through the skin of the ship when required to affect the vessel's course, and drawn in again when not required. Each guiding or steering arrangement consists therefore of two rudders, one made to project on one side, and the other on the other side of the vessel.

Referring now to the drawings hereto attached, figure 1 shows side elevation of a steam-vessel constructed according to this invention; figure 2, plan of bottom; and figure 3, plan of top. Figure 4 shows longitudinal section thereof, the left-hand half being drawn on the line *a b* in figure 3, and the right-hand half being drawn on the line *c d* in figure 3. Figures 5, 6, and 7, are three cross sectional views on the lines indicated, whilst figure 8 shows end view. Figures 9 and 10 show respectively plan and side view of the ropes which carry the floats or paddles. Figure 11 shows cross section of the rim of the propelling wheel—and figure 12, side view of a portion of the packing, if the flanges of propelling wheel were removed. These illustrate clearly the first and second parts of my invention, namely, the construction of the bottom, and the means of propelling my vessels. A A are the two compound vessels, which are connected above by the framing B. Each half of these compound vessels, it will be seen, comes to a point at A^1, whilst they gradually bulge out to the centre, A^2, and are strongly connected together lengthwise by girder bridges, C, as shown in figure 4, whilst the vessel as a whole is strengthened crosswise by girders at intervals, as shown in figures 5, 6, and 7. DD are the two large flanged wheels, over which gear the steel wire ropes, D^1, carrying the floats or paddles, D^2. The method of constructing and connecting said steel wire ropes is shown in figure 9. The method of attaching the floats thereto is shown in figure 10; and the method of packing the peripheries of the wheels, in figures 11 and 12.

It is evident that the bulge of the half-cigar-shaped bottoms may be increased or lessened, and the propelling wheels increased or diminished in size; and also that the shape and connections of the floats or paddles may be altered without departing from the nature of this part of my invention.

Figure 13 shows elevation of my steering apparatus, and figure 14, plan thereof. Figures 15 and 16 show respectively elevation and plan of the steering-wheel, and its connections on a larger scale. E is the steering-wheel on shaft E^1; E^2, screw-thread cut thereon; E^3, box or female-screw, carrying crank-arms. E^4 E^5 are sliding-blocks, on outer edge of each of which is rack E^6, gearing into pinion E^7, on top of spindle E, the lower part of which carries eccentric E^9, for working the slide-valve of a steam cylinder F. F^1 is piston, and F^2 its rod, which works the piston G^1 of water-cylinder G. G^2 and G^3 are pipes leading to another water-cylinder H, the piston rod H^2 of which passes through stuffing-box H^1, and works the rudder J. This rudder is encased in a water-tight chamber, runs on friction rollers J^1, and between guide rollers J^2. When the wheel is turned in one direction, the corresponding crank-arm is carried into the slot in the sliding-block E^5, whilst the other crank-arm is quite free. The rack E^6 on said sliding-block then operates the rudder on that side of the ship, through the intervention of the intermediate contrivances, as shown, thrusting it out more or less as may be required. When the steering-wheel is returned to its original position, the rudder is restored to its original position inside the vessel; and when the steering-wheel is turned in the opposite direction, the opposite rudder is thrust out from the vessel.

The steam and water cylinders I have herein referred to, and illustrated in my drawings, are of the ordinary description, and therefore need no explanation, as their construction and working are perfectly well-known.

Steam-vessels constructed according to this invention have many advantages over those of the ordinary description, for instance—all other things being equal—they can be driven at a greater speed, are more easily steered, and have less wear and tear, thereby enabling both passengers and cargo to be carried more conveniently, and at less rates than those which now obtain.

Having

Having thus described the nature of my invention and the manner of performing same, I would have it understood that what I claim as my invention is—

First—Constructing compound steam-vessels, in which the bottom or bottoms are made substantially in the shape herein described, and illustrated in figures 1 to 8 of my drawings.

Second—Constructing the propellers of compound steam-vessels with two large double-flanged wheels, carrying endless ropes for the support of floats or paddles to act against the comparatively still water between the two halves of a compound steam-vessel, substantially as herein described and explained.

Third—Constructing steam-vessels with the rudders to project from the sides, and working them by the mechanical contrivances substantially as herein described and explained.

In witness whereof, I, the said Robert Wilcox, have hereto set my hand and seal, this fifth day of September, one thousand eight hundred and seventy-nine.

ROBERT WILCOX.

Witness—

EDWD. WATERS,
Melbourne, Patent Agent.

This is the specification, marked A, referred to in the annexed Letters of Registration granted to Robert Wilcox, this third day of November, A.D. 1879.

AUGUSTUS LOFTUS.

REPORT.

Sir,

Sydney, 30 September, 1879.

We do ourselves the honor to report, in reply to your blank cover communication of the 15th instant, 79/7,114, with reference to Mr. Robert Wilcox's petition for Letters of Registration for "Improvements in Steam-vessels," that we are of opinion that Letters of Registration may be granted to the Petitioner, in terms of his specification, drawings, &c.

We have, &c.,
E. O. MORIARTY.
E. C. CRACKNELL.

The Principal Under Secretary.

[Drawings—three sheets.]

B

R. WILCOX'S. PATENT.

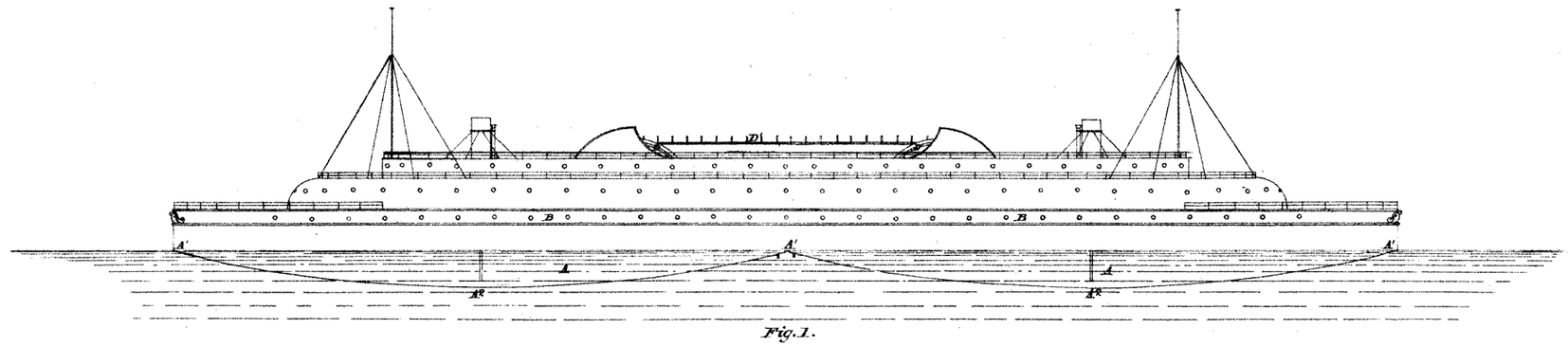

Fig. 1.

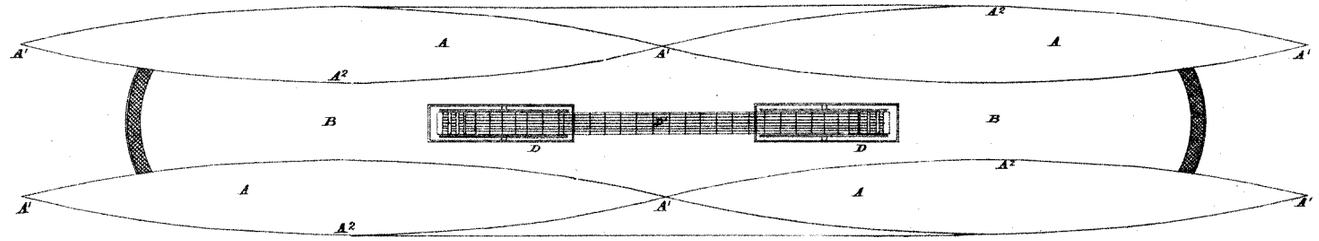

Fig. 2.

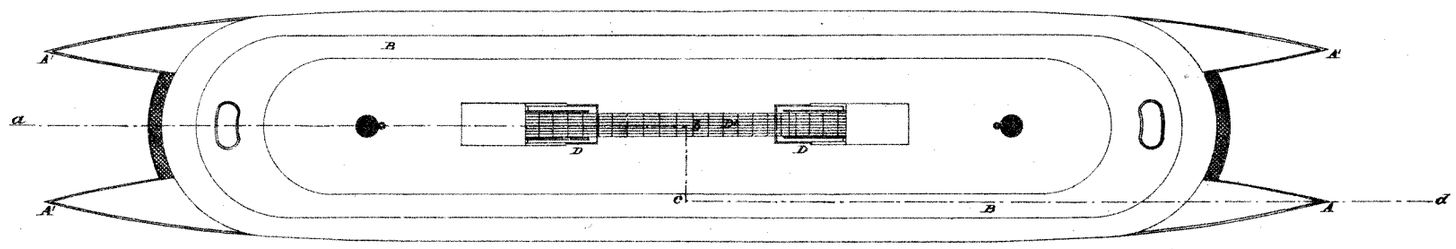

Fig. 3.

This is the Sheet of Drawings marked "B" referred to in the annexed Letters of Registration granted to Robert Wilcox this third day of November A.D. 1879.

(Sig. 198-)

Augustus Loftus

PHOTO-LITHOGRAPHED AT THE GOVT. PRINTING OFFICE,
SYDNEY, NEW SOUTH WALES.

C.

R. WILCOX'S PATENT.

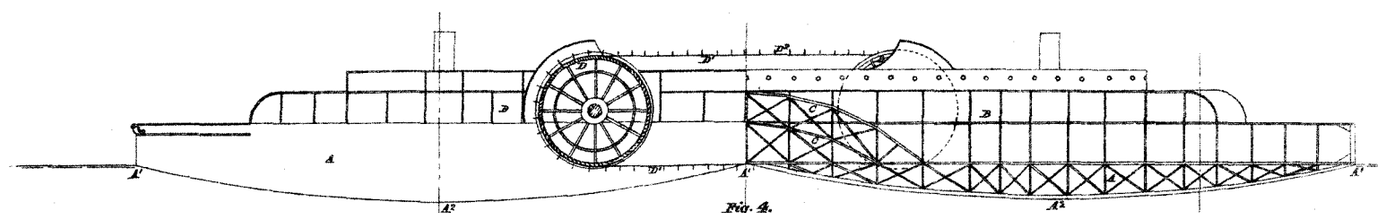

Fig. 4.

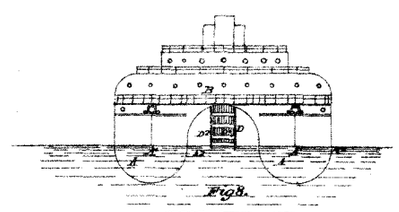

Fig 8.

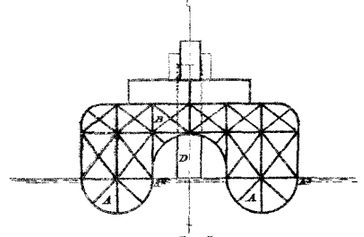

Fig. 5

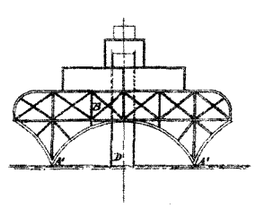

Fig. 6.

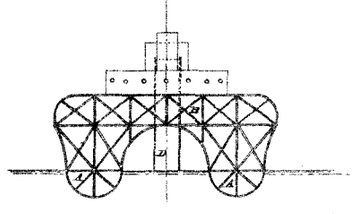

Fig. 7.



Fig 12.

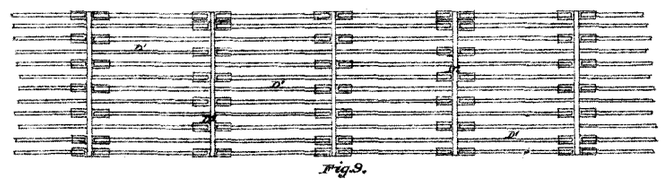

Fig 9.

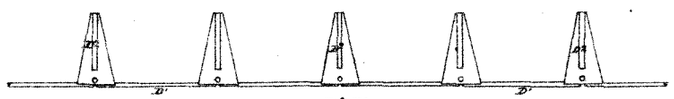

Fig 10.

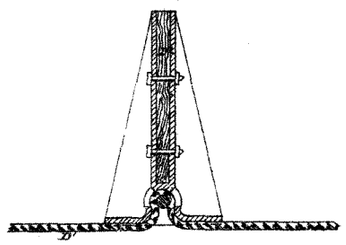

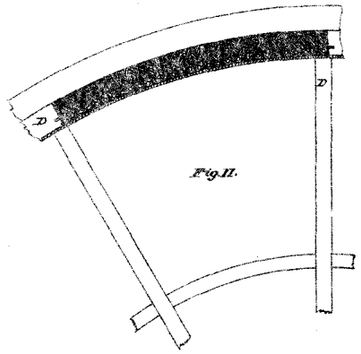

Fig 11.

This is the Sheet of Drawings marked "C" referred to in the annexed Letters of Registration granted to Robert Wilcox this third day of November A.D. 1879.

(Sig. 198-)

"Augustus Loftus"

PHOTO-LITHOGRAPHED AT THE GOVT. PRINTING OFFICE, SYDNEY, NEW SOUTH WALES.

D.

R. WILCOX'S. PATENT.

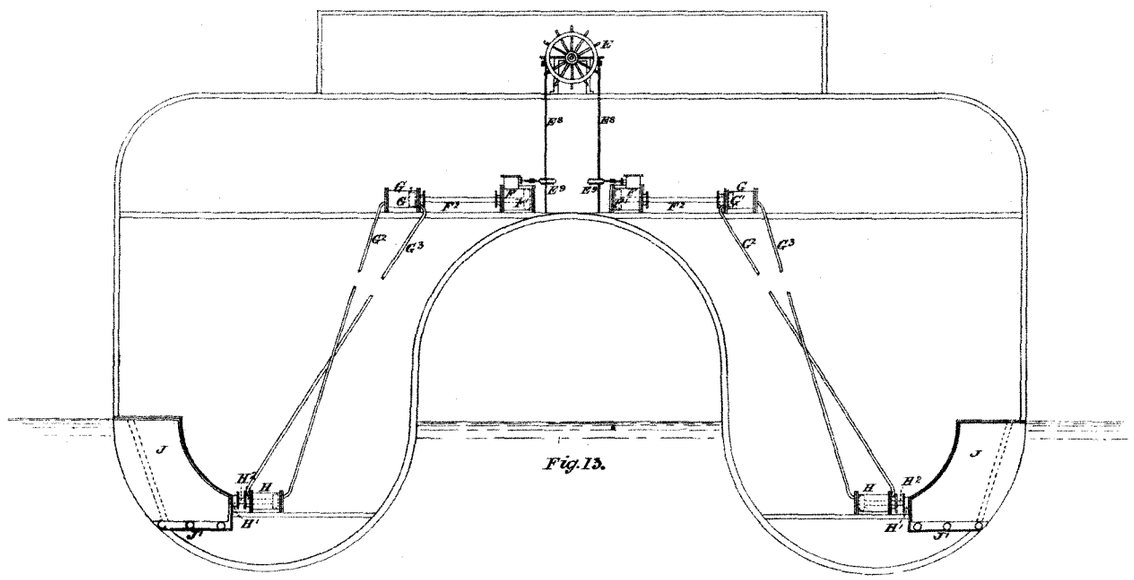

Fig. 13.

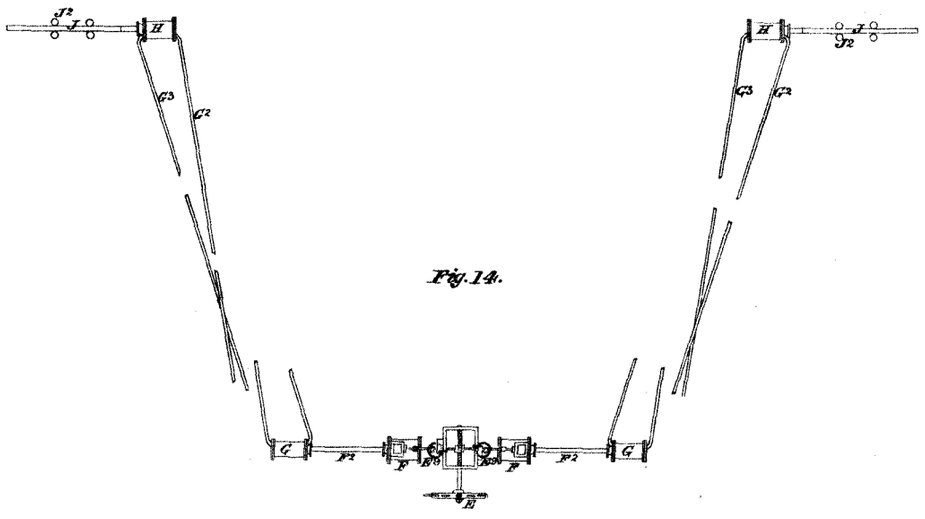

Fig. 14.

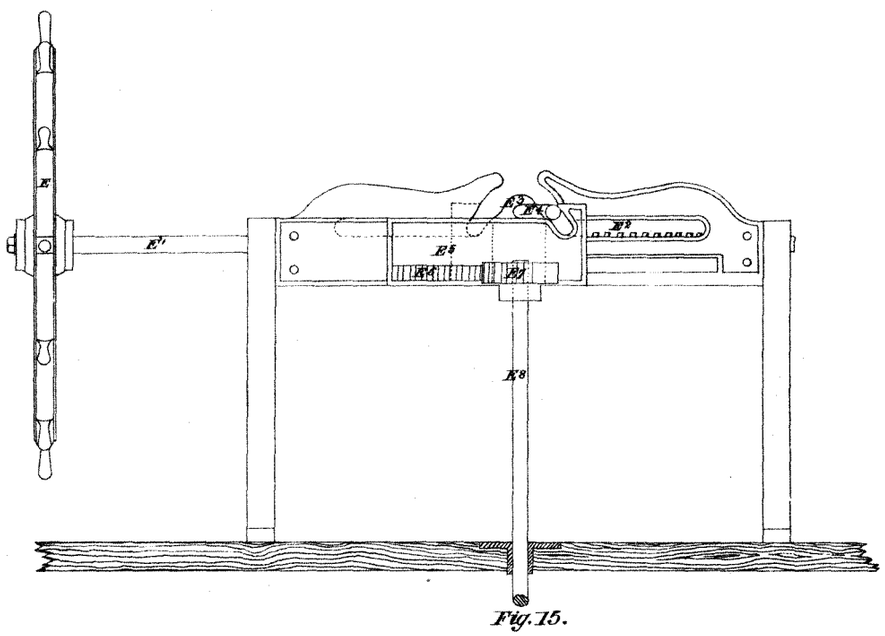

Fig. 15.

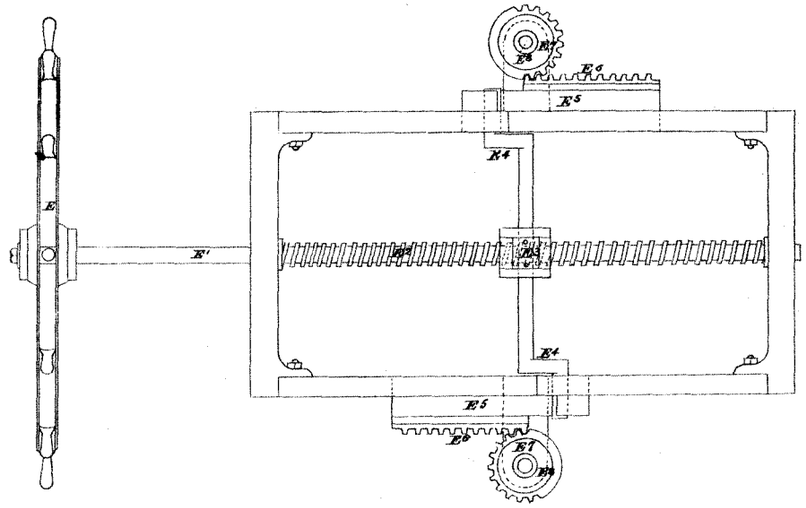

Fig. 16.

This is the Sheet of Drawings marked "D" referred to in the annexed Letters of Registration granted to Robert Wilcox this third day of November A. D. 1879.

(Sig 198-)

"Augustus Loftus"

PHOTO-LITHOGRAPHED AT THE GOVT. PRINTING OFFICE, SYDNEY, NEW SOUTH WALES.

A.D. 1879, *3rd November.* No. 776.

DIFFERENTIAL COMPOUND ENGINE.

LETTERS OF REGISTRATION to George Bowman Mackenzie, for a Differential Compound Engine.

[Registered on the 4th day of November, 1879, in pursuance of the Act 16 Vic. No. 24.]

BY His Excellency the Right Honorable Sir Augustus William Frederick Spencer Loftus (commonly called Lord Augustus Loftus), Knight Grand Cross of the Most Honorable Order of the Bath, a Member of Her Majesty's Most Honorable Privy Council, Governor and Commander-in-Chief of the Colony of New South Wales and its Dependencies.

TO ALL TO WHOM THESE PRESENTS SHALL COME, greeting:

WHEREAS George Bowman Mackenzie, of Grafton Wharf, Sydney, in the Colony of New South Wales, blacksmith, hath by his Petition humbly represented to me that he is the author or designer of a certain invention or improvement in manufactures, that is to say, of an invention of a "Differential Compound Engine," which is more particularly described in the specification and the sheet of drawings which are hereunto annexed; and that he, the said petitioner, hath deposited with the Honorable the Treasurer of the said Colony of New South Wales the sum of Twenty Pounds sterling, for defraying the expense of granting these Letters of Registration, as required by the Act of Council, sixteenth Victoria, number twenty-four; and hath humbly prayed that I would be pleased to grant Letters of Registration, whereby the exclusive enjoyment and advantage of the said invention or improvement might be secured to him for a period of fourteen years: And I, being willing to give encouragement to all inventions and improvements in the arts or manufactures which may be for the public good, and having received a report favourable to the prayer of the said Petition, from competent persons appointed by me to examine and consider the matters stated therein and to report thereon for my information, am pleased, with the advice of the Executive Council, and in exercise of the power and authority given to me by the said Act of Council, to grant, and do by these Letters of Registration grant unto the said George Bowman Mackenzie, his executors, administrators, and assigns, the exclusive enjoyment and advantage of the said invention or improvement, for and during the term of fourteen years from the date hereof; to have, hold, and exercise, unto the said George Bowman Mackenzie, his executors, administrators, and assigns, the exclusive enjoyment and advantage thereof, for and during and unto the full end and term of fourteen years from the date of these presents next and immediately ensuing, and fully to be complete and ended: Provided always, that if the said George Bowman Mackenzie shall not, within three days after the granting of these Letters of Registration, register the same in the proper office in the Supreme Court, at Sydney, in the said Colony of New South Wales, then these Letters of Registration, and all advantages whatsoever hereby granted, shall cease and become void.

In witness whereof, I have hereunto set my sign manual, and have caused the present Letters of Registration to be sealed with the seal of the said Colony of New South Wales, at Government House, Sydney, in New South Wales, this third day of November, in the year of our Lord one thousand eight hundred and seventy-nine.

[L.S.] AUGUSTUS LOFTUS.

A.D. 1879. No. 776.

Differential Compound Engine.

SPECIFICATION.

TO ALL TO WHOM THESE PRESENTS SHALL COME, I, GEORGE BOWMAN MACKENZIE, of Grafton Wharf, Sydney, in the Colony of New South Wales, send greeting:

WHEREAS I am desirous of obtaining Letters of Registration for securing unto me Her Majesty's special license that I, my executors, administrators, and assigns, or such others as I or they should at any time agree with, and no others, should and lawfully might, from time to time, and at all times during the term of fourteen years, to be computed from the day on which this instrument is left at the office of the Colonial Secretary, at Sydney, make, use, exercise, and vend within the Colony of New South Wales, an invention for obtaining motive power by means of an improved compound engine; and in order to obtain the said Letters of Registration I must, by an instrument in writing under my hand, particularly describe and ascertain the nature of the said invention and in what manner the same is to be performed: Now know ye that I, the said George Bowman Mackenzie, do hereby declare the nature of the said invention and the manner in which performed to be particularly described and ascertained in and by the following statements and description, reference being had to the drawings hereto annexed, and to the letters and figures marked thereon, which indicate the parts herein referred to and herein particularly explained, that is to say:—

Specification for an improved compound engine to be called "Mackenzie's Differential Compound Engine," which is simpler in construction and consequently less expensive to make and is also more economical to work than other ordinary compound engines.

NATURE OF INVENTION.

1. My invention consists of an improved compound engine to be used with steam, air, or any other elastic and expansive fluid under pressure, admitted on one side only of the piston or plunger, to produce rotary motion.

The elastic fluid after having done its work on one side of the piston is admitted by a slide valve on the other side, when by its expansion and acting on a larger area of piston another stroke is produced to complete a revolution.

2. The side of the plunger or piston in direct communication with the steam or elastic fluid is of less area than the other side, so that when the steam or elastic fluid is cut off from the former it expands immediately on the latter having a larger area and produces the return stroke with an equal pressure.

3. The difference of area of the two sides of the piston is regulated by the amount of expansion of the steam or elastic fluid used in such a manner that the power exerted is equal at each stroke alternately on each side of the piston, and the engine works smoothly and regularly without any shock and jerk.

ADVANTAGES OF INVENTION.

1. The compound action of my engine is produced in a single cylinder, instead of in two cylinders as hitherto done in compound engines.

2. No intermediate receiver or valve is necessary.

3. The construction of my engine is simplified, and, by the effective combination of its different parts, is less costly than other compound engines.

4. A saving of steam or elastic fluid under pressure is effected, by such being necessary on one side of the piston only at each revolution of the engine.

5. One cylinder can be used singly or several in combination to produce regular rotary motion, each cylinder being in itself compound by the calculated difference of pressure on the different areas on the opposite sides of each piston.

6. After the steam or elastic fluid has done its work in one cylinder, it may be led by pipes direct and used in other cylinders of proportionate dimensions to utilize its remaining strength, or it may be condensed, or allowed to escape by the exhaust pipe.

7. The brasses of my connecting rods inside the trunk can be tightened when required without disconnection, by means of a tube or sleeve with adjustable screws and nuts.

I shall now proceed to describe the action of my improved compound engine, supposing steam to be used.

The different parts of my engine consist of a cylinder, A, with a metallic piston, B, and trunk, C, in which the connecting rod D is jointed at E.

The steam is admitted into the cylinder by the pipe M on one side of the piston (as shown by the arrows), and at the same time the other part of the cylinder on the other side of the piston communicates with the exhaust pipe K.

By the action of the eccentric N on the slide valve H the steam is shut off from the cylinder, the exhaust port is closed, and the steam contained in the cylinder at I is immediately expanded and fills the cylinder on both sides of the piston.

The pressure of this expanded steam on the larger area of the piston being greater than on the small area on the other side of it, produces the return-stroke and completes one revolution of the engine.

The continuous motion is thus ensured by the admission of the steam on one side only of the piston, and by using this steam expansively on the other side.

The difference of areas of the opposite sides of the piston is so calculated (according to the loss or reduction of pressure by the expansion of the steam introduced in the cylinder) as to give on either side at each stroke of the piston an equal amount of power exerted.

No fly-wheel is required to keep a regular and steady continuous rotary motion, although one may be used.

A saving of steam is effected, and the engine is compact and simple in construction.

To prevent the disconnection of the connecting rod when the brasses in the trunk require screwing, I place the rod itself in a sleeve or tube, D. This tube moves in a collar, F, at the bottom, and has a nut, S, on which the brasses rest, fitting a screw, V, cut on the rod. By turning or screwing the tube the brasses are tightened. A set screw, G, secures the sleeve in position.

Having

Differential Compound Engine.

Having set forth the nature of my invention and the manner in which my improvements are made in compound engines, it is to be clearly understood, before I proceed to state my claims, that I do not bind myself to nor do I claim the particular form, shape, and dimensions of the different parts of my compound engines, nor the material of which they are made (which may be either iron, steel, brass, or any other metal, or any substance or composition found suitable for the construction of engines); neither do I claim any of my arrangements singly or apart from the objects or purposes of the said invention as herein set forth.

I claim generally the improvements in compound engines (used with steam or other elastic fluid under pressure) I have described, by the use of which, either separately or in combination, I obtain the advantages herein set forth, and I further specially claim, on account of their peculiar novelty,—

First—The direct and combined action of high and low pressure steam or elastic fluid in one cylinder with one slide valve.

Second—Producing, by means of such action, and by introducing steam or elastic fluid under pressure on one side only of the piston, a continuous, even, and regular rotary motion, with or without a fly-wheel.

Third—A saving of steam or elastic fluid by the direct combined action of the high and low pressure in one cylinder and by the high pressure being necessary for one stroke only during each revolution of the engine.

Fourth—The adjusting of the connecting rod brasses inside the trunk of the piston by means of a tube screwed over the rod.

G. B. MACKENZIE,
Grafton Wharf, Sydney.

Sydney, October 6th, 1879.

My improved Differential Compound Engine is now successfully at work at the Sydney International Exhibition.

This is the specification referred to in the annexed Letters of Registration granted to George Bowman Mackenzie, this third day of November, A.D. 1879.

AUGUSTUS LOFTUS.

REPORT.

Sir,

Sydney, 14 October, 1879.

We do ourselves the honor to report, in reply to your blank cover communication of the 9th instant, 79/7,913, with reference to Mr. G. B. Mackenzie's application for Letters of Registration for an invention of a "Differential Compound Engine," that we are of opinion that Letters of Registration may be granted to the Petitioner, in terms of his specification, drawings, &c.

We have, &c.,
GOTHER K. MANN.
E. O. MORIARTY.

The Principal Under Secretary.

[Drawings—one sheet.]

MACKENZIES DIFFERENTIAL COMPOUND ENGINE

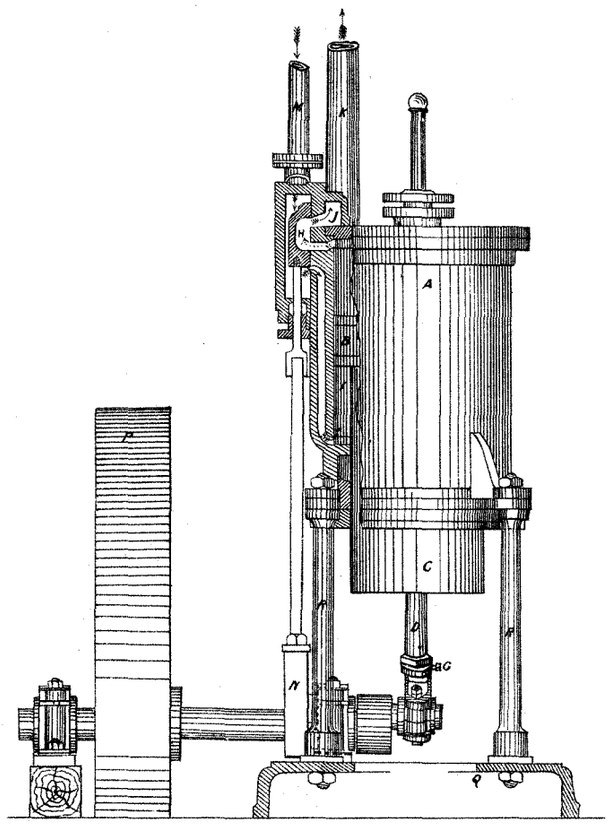

Fig: 1.

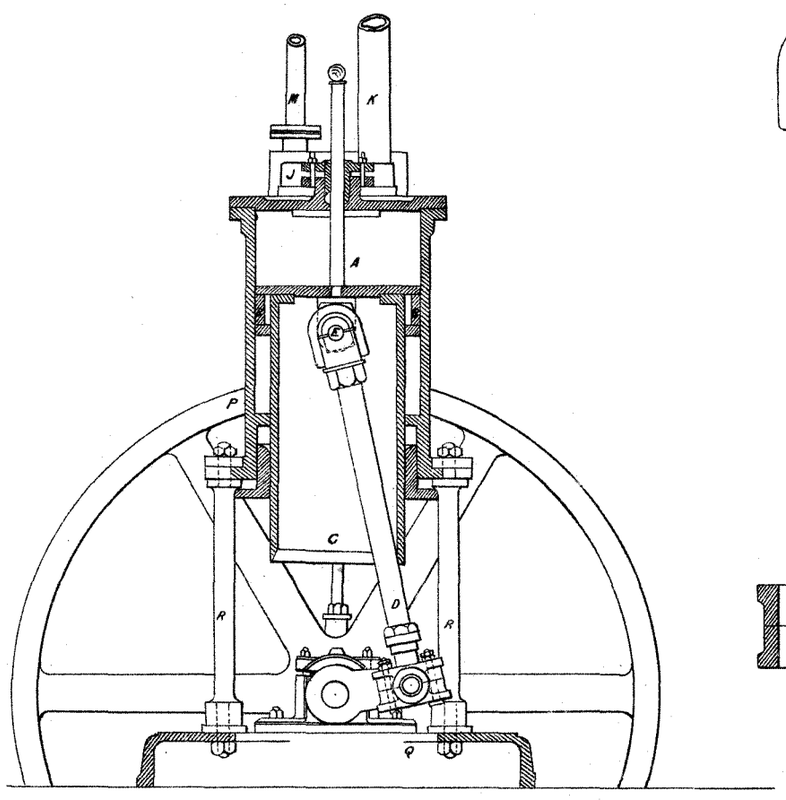

Fig: 2.

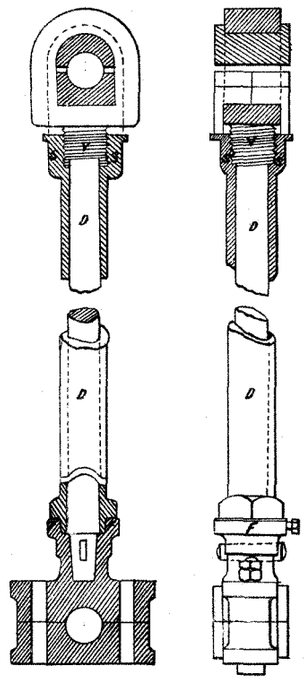

Fig: 3.

Fig: 4.

This is the Sheet of Drawings referred to in the annexed Letters of Registration granted to George Bowman Mackenzie, this third day of November A.D. 1879.

Augustus Loftus.

G. B. MacKenzie
Grafton Wharf
Sydney.

Sig: 198.

PHOTO-LITHOGRAPHED AT THE GOVT. PRINTING OFFICE, SYDNEY, NEW SOUTH WALES.

A.D. 1879, 6*th November*. No. 777.

COMBINATION AND FASTENING CLIPS.

LETTERS OF REGISTRATION to Ezra Hinckley and James Knox Newton, for Combination and Fastening Clips.

[Registered on the 7th day of November, 1879, in pursuance of the Act 16 Vic. No. 24.]

BY His Excellency the Right Honorable Sir Augustus William Frederick Spencer Loftus (commonly called Lord Augustus Loftus), Knight Grand Cross of the Most Honorable Order of the Bath, a Member of Her Majesty's Most Honorable Privy Council, Governor and Commander-in-Chief of the Colony of New South Wales and its Dependencies.

TO ALL TO WHOM THESE PRESENTS SHALL COME, greeting:

WHEREAS Ezra Hinckley, of Sydney, in the Colony of New South Wales, engineer, hath by his Petition humbly represented to me that he is the author or designer of a certain invention or improvement in manufactures, that is to say, of an invention of "Combination and Fastening Clips" for a spiral spring steel wire copper-covered bed, which is more particularly described in the specification and the sheet of drawings which are hereunto annexed; and whereas it is alleged that one James Knox Newton is the assignee of one-half interest in the said invention; and that he, the said Petitioner, hath deposited with the Honorable the Treasurer of the said Colony of New South Wales, the sum of Twenty Pounds sterling, for defraying the expense of granting these Letters of Registration, as required by the Act of Council, sixteenth Victoria, number twenty-four; and hath humbly prayed that I would be pleased to grant Letters of Registration, whereby the exclusive enjoyment and advantage of the said invention or improvement might be secured to him, the said Ezra Hinckley, and to the said James Knox Newton, for a period of fourteen years: And I, being willing to give encouragement to all inventions and improvements in the arts or manufactures which may be for the public good, and having received a report favourable to the prayer of the said Petition, from competent persons appointed by me to examine and consider the matters stated therein and to report thereon for my information, am pleased, with the advice of the Executive Council, and in exercise of the power and authority given to me by the said Act of Council, to grant, and do by these Letters of Registration grant unto the said Ezra Hinckley and James Knox Newton, their executors, administrators, and assigns, the exclusive enjoyment and advantage of the said invention or improvement, for and during the term of fourteen years from the date hereof: to have, hold, and exercise unto the said Ezra Hinckley and James Knox Newton, their executors, administrators, and assigns, the exclusive enjoyment and advantage thereof, for and during and unto the full end and term of fourteen years from the date of these presents next and immediately ensuing, and fully to be complete and ended: Provided always, that if the said Ezra Hinckley and James Knox Newton shall not, within three days after the granting of these Letters of Registration, register the same in the proper office in the Supreme Court, at Sydney, in the said Colony of New South Wales, then these Letters of Registration, and all advantages whatsoever hereby granted, shall cease and become void.

In witness whereof, I have hereunto set my sign manual, and have caused the present Letters of Registration to be sealed with the seal of the said Colony of New South Wales, at Government House, Sydney, in New South Wales, this sixth day of November, in the year of our Lord one thousand eight hundred and seventy-nine.

[L.S.] AUGUSTUS LOFTUS.

Combination and Fastening Clips.

TO ALL TO WHOM THESE PRESENTS SHALL COME: I, EZRA HINCKLEY, at present of No. 11, Pitt-street, in the city of Sydney, engineer, send greeting:

WHEREAS I am desirous of obtaining Letters of Registration for securing unto me Her Majesty's special license that I, my executors, administrators, and assigns, and such others as I or they should at any time agree with and no others, shall and lawfully may, from time to time, and at all times during the term of fourteen years, to be computed from the day on which this instrument is left at the office of the Colonial Secretary, Sydney, make and exercise, use, and vend within the Colony of New South Wales, an invention of a combination of steel coppered wire spiral springs, fastened by flat or round iron bands, which placed in arrangement, form a body of substantial spring supports or pillars applicable to beds, sofas, chairs, or other like domestic conveniences, to the great ease and comfort of all persons reposing thereon, as more particularly described and shown in the accompanying plan and specification.

SPECIFICATION.

THE invention consists of a number of spiral steel wire springs, copper-covered, and arranged and locked in frame by flat or round metallic bands, by which the whole frame is secured, shaped, and kept together. Each spring may be regarded as a column or pillar of support, and when combined in the manner of this invention, helps to form one extended system of springs equal to any desired pressure or weight.

The object of the invention is the perfect ease, and flexibility to pressure and movement of a superincumbent body; the spiral springs so fastened and combined give a yielding and returning surface, to which it is believed that no comparable invention exists for securing the perfect ease and comfort of the sleeper or sitter.

The novelty is in the combination and fastenings (clips).

The advantages, in the flexibility, coolness, cleanness, durability, and lightness of the article.

EZRA HINCKLEY.

Signed at Sydney, 13th September, 1879.

This is the specification referred to in the annexed Letters of Registration granted to Ezra Hinckley and James Knox Newton, this sixth day of November, A.D. 1879.

AUGUSTUS LOFTUS.

REPORT.

Sir, Sydney, 29 September, 1879.

We do ourselves the honor to state, in reference to your blank cover communication of the 13th instant, No. 7,249, that on examination of the documents transmitted for our report, we find that although there is no novelty in the principle of the spiral steel spring, we are of opinion that the prayer of the Petition may be granted for the Combination and Fastening Clips.

We have, &c.,
GOTHER K. MANN.
ROBERT GEO. MASSIE.

The Principal Under Secretary.

[Drawings—one sheet.]

DETAILS OF SPRINGS & THEIR CONNECTIONS

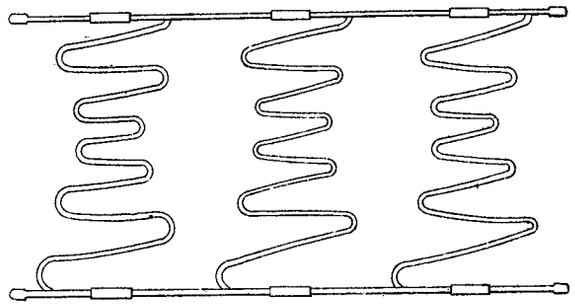

Front Elevation.

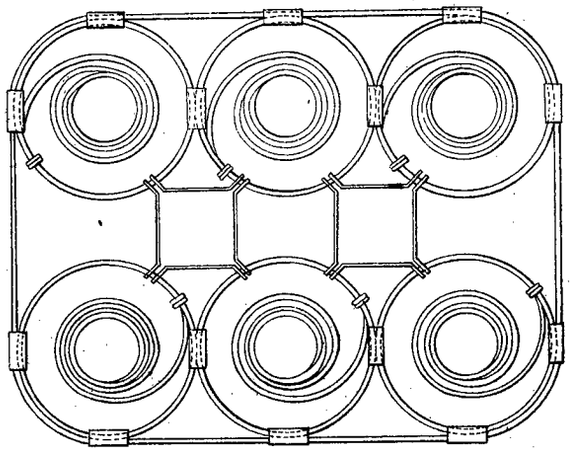

Plan.

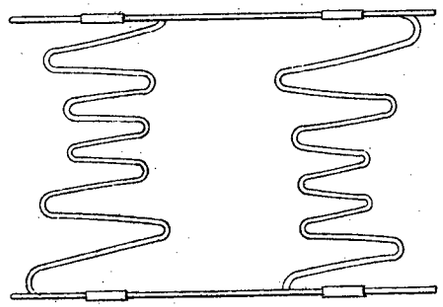

Side Elevation.

This is the Sheet of Drawings referred to in the annexed Letters of Registration granted to Ezra Hinckley, and James Knox Newton, this sixth day of November A.D. 1879.

Augustus Loftus.

Scale of Feet.

PHOTO-LITHOGRAPHED AT THE GOVT. PRINTING OFFICE, SYDNEY, NEW SOUTH WALES.

A.D. 1879, 13*th November*. No. 778.

IMPROVEMENTS IN APPARATUS FOR GRINDING GRAIN, &c.

LETTERS OF REGISTRATION to Edmund Schmeja, for Improvements in Apparatus for grinding grain, pulse, bones, cement, and other substances.

[Registered on the 14th day of November, 1879, in pursuance of the Act 16 Vic. No. 24.]

BY His Excellency the Right Honorable Sir Augustus William Frederick Spencer Loftus (commonly called Lord Augustus Loftus), Knight Grand Cross of the Most Honorable Order of the Bath, a Member of Her Majesty's Most Honorable Privy Council, Governor and Commander-in-Chief of the Colony of New South Wales and its Dependencies.

TO ALL TO WHOM THESE PRESENTS SHALL COME, greeting:

WHEREAS Edmund Schmeja, of Biala, in the Austrian Empire, hath by his Petition humbly represented to me that he is the author or designer of a certain invention or improvement in manufactures, that is to say, of an invention of "Improvements in Apparatus for grinding grain, pulse, bones, cement, and other substances," which is more particularly described in the specification, marked A, and the three sheets of drawings, marked B, C, and D, respectively, which are hereunto annexed; and that he, the said Petitioner, hath deposited with the Honorable the Treasurer of the said Colony of New South Wales the sum of Twenty Pounds sterling, for defraying the expense of granting these Letters of Registration, as required by the Act of Council, sixteenth Victoria, number twenty-four; and hath humbly prayed that I would be pleased to grant Letters of Registration, whereby the exclusive enjoyment and advantage of the said invention or improvement might be secured to him for a period of fourteen years: And I, being willing to give encouragement to all inventions and improvements in the arts or manufactures which may be for the public good, and having received a report favourable to the prayer of the said Petition, from competent persons appointed by me to examine and consider the matters stated therein and to report thereon for my information, am pleased, with the advice of the Executive Council, and in exercise of the power and authority given to me by the said Act of Council, to grant, and do by these Letters of Registration grant unto the said Edmund Schmeja, his executors, administrators, and assigns, the exclusive enjoyment and advantage of the said invention or improvement, for and during the term of fourteen years from the date hereof; to have, hold, and exercise unto the said Edmund Schmeja, his executors, administrators, and assigns, the exclusive enjoyment and advantage thereof, for and during and unto the full end and term of fourteen years from the date of these presents next and immediately ensuing, and fully to be complete and ended: Provided always, that if the said Edmund Schmeja shall not, within three days after the granting of these Letters of Registration, register the same in the proper office in the Supreme Court, at Sydney, in the said Colony of New South Wales, then these Letters of Registration, and all advantages whatsoever hereby granted, shall cease and become void.

In witness whereof, I have hereunto set my sign manual, and have caused the present Letters of Registration to be sealed with the seal of the said Colony of New South Wales, at Government House, Sydney, in New South Wales, this thirteenth day of November, in the year of our Lord one thousand eight hundred and seventy-nine.

[L.S.] AUGUSTUS LOFTUS.

Improvements in Apparatus for grinding grain, &c.

A.

SPECIFICATION of EDMUND SCHMEJA, of Biala, in the Austrian Empire, for his invention of "Improvements in Apparatus for grinding grain, pulse, bones, cement, and other substances."

THIS invention relates to that description of apparatus for grinding grain and other substances wherein the substance to be ground is passed between two metal discs with roughened or grooved surfaces revolving in close contiguity to each other.

The present improvements relate to a peculiar construction of the grinding surfaces of such discs with projections or teeth of various forms, such that while they effectually reduce the grain or other substance to the desired pulverulent or granular condition, the projections or teeth are capable of being adjusted in order to make good any wearing off of the grinding surfaces, and are also capable of having their working edges re-sharpened by grinding the acting surfaces of the one disc against those of the other, with the intervention of emery or similar substance.

Furthermore, one or both the grinding surfaces may be made reversible with duplicate sets of teeth or projections on each side, so that when the one set is worn or blunted the plate may be reversed, so as to bring the other set into action.

These grinding surfaces operate according to two different methods :—

First—By causing the teeth or projections on the one surface to enter between the teeth of the other surface, the teeth being in this case arranged in concentric circles or segments of circles having grooves or spaces at intervals between them extending from the centre to the circumference of the disc, for the passage outwards of the grain or other substance, which is in all cases fed in centrally between the two discs.

According to the second method, the projections of the one disc merely meet those of the other disc without entering between them, the acting surfaces of the two sets of projections being ground flat together in the first instance, thus forming sharp edges at the boundaries of these surfaces, which edges consequently operate with a cutting or crushing action.

The teeth or projections operating according to the first method may, according to one arrangement, consist of separate rods of steel or other suitable hard metal secured to a ring which is adjustable upon the disc, so as that the acting ends of the rods wear away they can be advanced towards the teeth of the other disc. Such adjustment may conveniently be effected by screwing the ring upon a screw-thread formed on the circumference of the disc.

The rods forming the teeth may be firmly clamped together at their acting ends by external clamping rings.

Both the grinding discs may be provided with teeth formed of rods, as described, or the one disc may have in lieu thereof reversible metal blocks or plates having teeth formed on both sides thereof.

The rods forming the separate teeth may either have small interstices between them, which may advantageously be filled with some soft material such as paper, or they may fit closely against each other.

Instead of forming the radial rows of teeth of separate rods they may be all cut out of or cast in a single strip like a comb, and be made either of considerable length or merely of the length required for the acting part thereof, and in this case the strips may be reversible, as before described.

According to another modification, both discs may be provided with plates or blocks having teeth on both sides so as to be reversible.

In either of the above arrangements the teeth may either extend over the whole surface of the discs, or the central parts of the discs may be left without teeth, or may have a less number than at the circumference, the central teeth being by preference stronger and of coarser pitch, to facilitate the entrance of the grain and to break it into large fragments that are afterwards reduced to small size by the other teeth.

The bounding surfaces of the teeth may have any desired configuration, so as to form angular, rounded, dove-tail, or other shaped grooves between them.

The teeth or projections operating according to the second before-described method may either be in the form of pins or studs having their one end fixed in a plate carried by the shaft, or on a boss at the back of the disc through holes in which the acting ends of the pins pass, the plates carrying them being adjustable on the shaft, so that the pins may be advanced through the discs as their acting surfaces wear away.

The pins or studs may be either of a circular, square, or other angular sectional form, and they may be advantageously made of greater size and distance apart as they approach the centre of the disc, for the purpose mentioned with reference to the first-described mode of construction.

The teeth operating according to this method may also be of elongated form, so as to constitute ridges or projecting bars extending either radially or obliquely from the centre to the circumference of the discs.

DESCRIPTION OF THE DRAWINGS.

Figures 1 to 7 of the drawings show various constructions of grinding surfaces operating according to the first herein described method, that is to say, wherein the teeth or projections on the one surface are made to project between the teeth or projections of the other grinding surface. Figure 1 shows a plan, and figure 2 a section on line XX of an arrangement having teeth of suitable form for coarse grinding for producing groats free from meal.

As it is necessary for this purpose that the grain, after having been cut by the teeth into the desired number of pieces, should leave the grinding surfaces as quickly as possible, in order to prevent the formation of meal, only a few circular rows of teeth taking into each other are provided, as shown at the left-hand side of these figures.

These circular rows of teeth are formed of steel, each one consisting of a separate rod, A A, so that in case of a fracture each tooth can separately be replaced.

These steel rods are fitted into recesses B, in the annular discs or rings B^1, and their acting surfaces are advanced towards each other as they wear away, by fitting the rings B with a screw-thread upon the discs C, so that they can be screwed upwards and downwards upon the latter.

The rings D have for their object to clamp the teeth tightly together by means of screws D^1 after they have been set; they are by preference provided with a packing of leather at D^2 to insure a perfect hold all round.

By

By means of the ribs on the rings B which enter the teeth, the latter are enabled to be drawn back, and they also prevent them from advancing should the clamping rings get loose during the grinding.

Instead of forming notches in the teeth for this purpose, they may have pins passing through them.

In order to regulate the extent to which the teeth of the one grinding surface project between those of the other, according to the fineness of the produce required, the one disc together with the shaft is adjustable by means of a screw and nut, as shown at figure 12, the other disc together with the casing being fixed.

The above-described form of teeth is also applicable for producing groats with meal by providing a greater number of circular and radial rows of teeth, as shown on the right-hand side of figures 1 and 2. The rings B are in this case considerably deeper, and can therefore more readily be made of cast iron, the clamping rings D being the same as in the first arrangement.

In order to preserve the points of the teeth on grinding the two sets together after they are worn, strips of paper or other soft material may be inserted between them, which will also assist in clamping them together.

At A^1, figure 2, is shown an arrangement in which each radial row of teeth is formed of a single steel plate, which, however, has the disadvantage of not being able to replace the single teeth when fractured. The said plates are in this case formed with teeth at both ends so as to be reversible, which arrangement is also applicable with the single teeth.

Figures 8 and 9 show respectively a vertical section and part plan of an arrangement in which the circular rows of teeth do not fit closely one against the other but have interstices between them, so that the grain on leaving the one row passes into a perfectly clear space, whence it enters the next row. This arrangement is more particularly applicable to the production of groat free of meal, and it has at the same time the peculiarity that the teeth are formed with a single oblique cutting face, as shown at figure 8, whereby the formation of meal is further prevented; the teeth are in this case formed of cylindrical rectangular or triangular rods, which can be variously arranged, as shown at figure 9, and which have countersunk heads fitting into recesses in the discs B, as shown at figure 8, and secured by a plate, E, so that by turning the discs B in one direction or the other teeth are advanced or withdrawn.

The ribs F, figure 9, have for their object to catch the grain and to throw it between the teeth by means of their great circumferential velocity. This form of teeth is also capable of being ground and adjusted, and of being re-placed, when fractured, in a similar manner to those before described.

Figures 3 to 6 show an arrangement in which the teeth are formed on the surfaces of the grinding discs themselves.

Figures 3 and 4 show respectively a plan and section at Y Y, and figures 5 and 6 show enlarged sections. In this case either the entire discs, as at G, or separate segments thereof, or the outer annular part thereof, are formed with teeth on both sides, so that when the teeth on the one side have become blunt after the rotation of the discs in both directions, the disc can be turned so as to bring the other set of teeth into action.

As the grain or other substance to be ground is always introduced at the centre, the discs are provided with serrated ribs H at intervals, for breaking up coarse substances, as also to intercept hard foreign bodies, such as nails or pieces of metal, and thereby bring the mill to a standstill, before such bodies have entered the finer grinding teeth and damaged them; the teeth of such ribs are for this purpose formed of gradually coarser pitch towards the centre, as shown at figures 3 and 4.

The section at figure 6 shows various forms of teeth, such as they present on a radial section through the discs, and the section at figure 5 shows the configuration of the teeth as viewed from the circumference of the discs.

In order to facilitate the entrance of the grain, the radial rows of teeth may be made of varying lengths, as shown at K, figure 3.

At L L^1, figure 3, are shown arrangements of teeth adapted for vertical grinding surfaces, that is with the driving shaft horizontal, in order to prevent coarse particles of grain from falling down through the radial spaces between the rows of teeth at the time when such spaces of the one disc coincide with those of the other side. For this purpose the rows of teeth, and consequently the spaces, are arranged somewhat obliquely, so that those of the one disc cannot fit exactly over those of the other, as indicated by the dotted lines.

At L^1 the spaces terminate somewhat beyond half the depth of the grinding surface, the other part of which in line with the space is formed with teeth.

At M, figure 11, is also shown a mode of arranging the teeth in groups, in which the teeth are formed in strips or bars of different length, which are adjustable and can be ground as above described.

At N a similar arrangement of cutters is shown, but with the surfaces flat and arranged obliquely, so that the surfaces of the one set pass obliquely over and in contact with those of the other set, as shown in dotted lines, so as to operate with a shearing action.

The teeth shown at O P Q also operate with a shearing action in sliding with their flat surfaces over each other, as shown in the section figure 12. They are sharpened by being ground one upon the other, and are adjusted to make good wear by shifting the discs R in which they are fixed, by means of screw-threads and nuts at S respectively on the shaft S^1 carrying the disc Y and on the eye of the disc Y^1, these discs having holes through which the teeth can slide, as shown.

In all the above-described arrangements of the teeth it is necessary that the discs carrying them should be hollowed or dished towards the centre, or that at any rate the bases of the teeth should be so far removed from each other at that point as to allow the grain or oher subtance to enter freely, as indicated at figure 7.

Figures 8 to 10 and 13 to 17 serve to show the application of the above described improved grinding surfaces to different arrangements of grinding mills.

Figures 8 to 10 show the construction of a mill for producing groats free from meal in which the mill shaft is arranged horizontally.

T is the feeding hopper, and U is the adjusting mechanism for moving the grinding teeth nearer together or further apart, according to the desired fineness of the produce.

Figures

Improvements in Apparatus for grinding grain, &c.

Figures 13 and 14 show a small hand machine for producing groats with meal or coarse meal. In this arrangement the grinding surfaces are formed of reversible toothed rings, as described with reference to figure 4, which can be reversed as soon as the teeth on the one side have become blunt. The adjustment of the teeth is in this case effected by means of the screw collars V V on the shaft.

In order to effect a preparatory breaking up of coarse substances such as bones, corn-cobs, sugar, and the like, before entering the grinding surfaces, the mill is provided, as X X, with a disintegrator, consisting also of separate adjustable teeth arranged as shown in the enlarged cross section and sectional plan at figures 16 and 15, each tooth being separately removable in case of fracture.

The shafts of the grinding surfaces can also be arranged vertically, and either the one grinding surface only be made to revolve or both made to revolve in contrary directions.

The teeth having become blunt on the one side after revolving for a certain time in one direction, the other side thereof may be brought into action by revolving the grinding surfaces in the contrary direction, and the teeth may be so formed that by such reversed rotation the other sides of the teeth are again sharpened.

Having thus described the nature of the said invention, and in what manner the same is to be performed, as communicated to me by my foreign correspondent, I claim,—

First—The before-described improved construction of grinding surfaces with teeth that are either fixed or adjustable, and of such form that they can be sharpened by grinding the teeth of the one surface against those of the other surface.

Second—Constructing grinding surfaces having teeth such as are set forth in the preceding claim, so that the one surface or both can be reversed in order to bring a second set of teeth into action when the first set has become blunt, substantially as herein described.

Third—The arrangements for adjusting and securing the teeth on their discs, herein described with reference to figures 2 and 12 of the drawings.

In witness whereof, I, the said Edmund Schmeja, have hereunto set my hand and seal, this twenty-eighth day of July, one thousand eight hundred and seventy-nine.

EDMUND SCHMEJA.

This is the specification, marked A, referred to in the annexed Letters of Registration granted to Edmund Schmeja, this thirteenth day of November, A.D. 1879.

AUGUSTUS LOFTUS.

REPORT.

Sydney, 29 September, 1879.

Sir,

We do ourselves the honor to state that we see no objection to the issue of Letters of Registration in favour of Mr. Edmund Schmeja, of Biala, for an invention described as an "Improvement in Apparatus for grinding grain, pulse, bones, and cement, and other substances," in accordance with the Petition, specification, drawings, and claim transmitted for our report, under your blank cover communication of the 18th instant, No. 7,280.

We have, &c.,

GOTHER K. MANN.
ROBERT G. MASSIE.

The Principal Under Secretary.

[Drawings—three sheets.]

Fig. 1

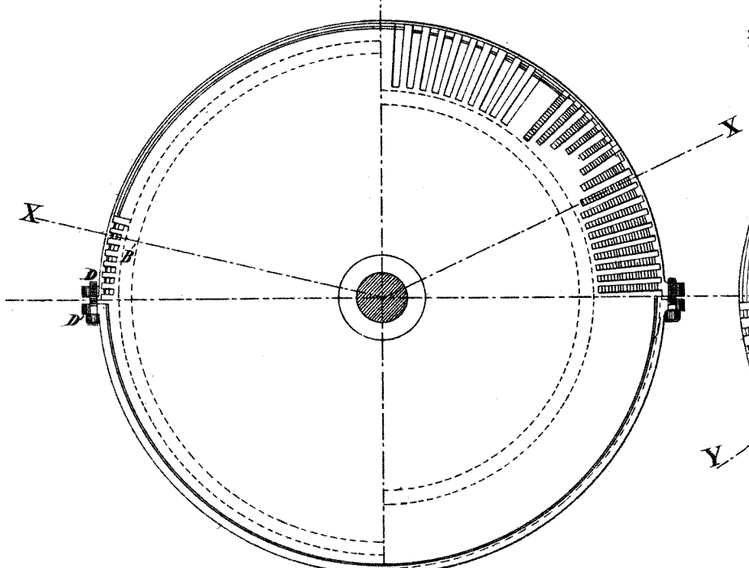

Fig. 5.

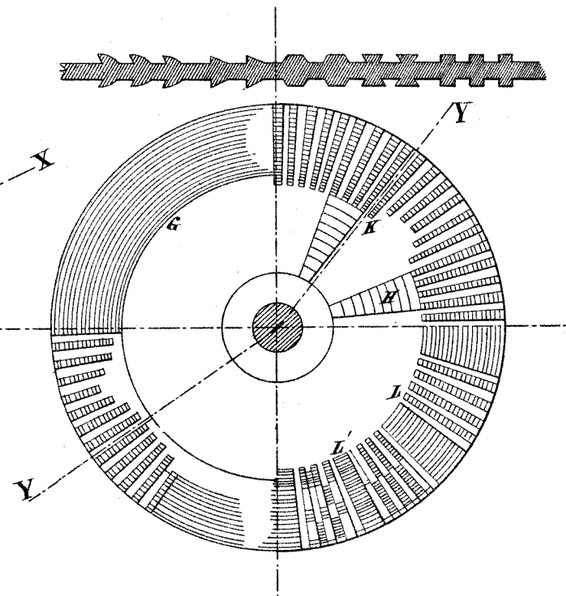

Fig. II.

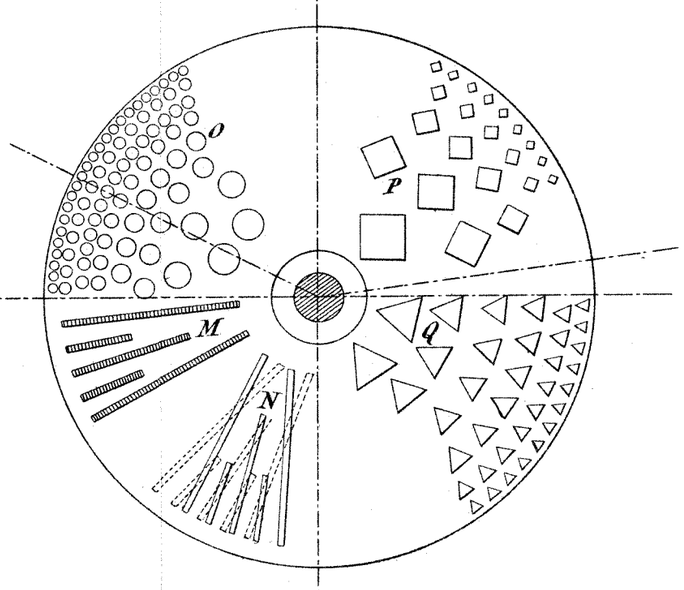

Fig. 7.



Fig. 6.



Fig. 2.

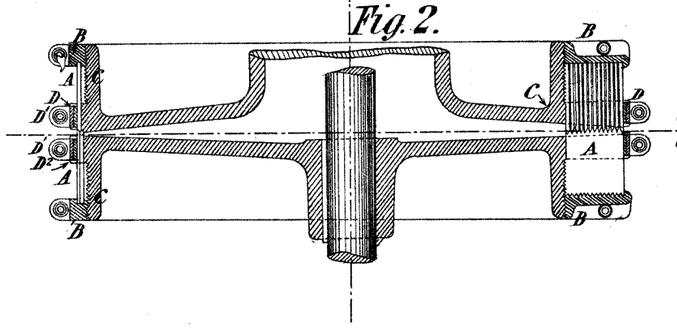

Fig. 4.

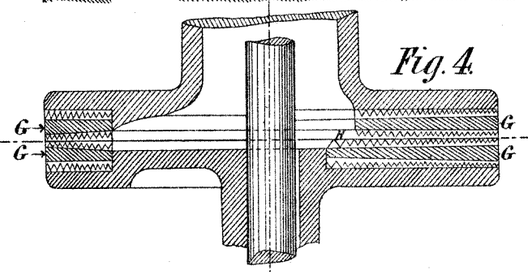

Fig. 12.

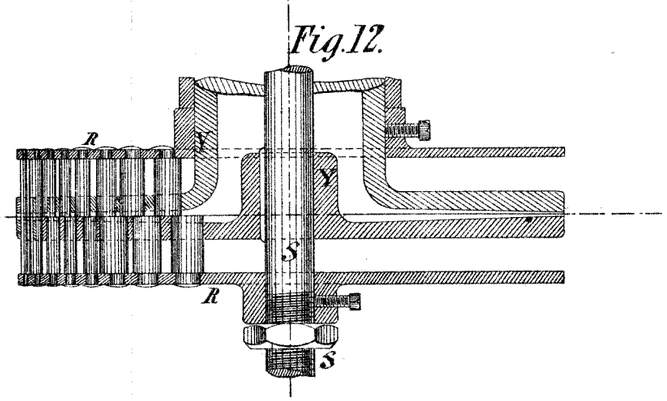

This is the Sheet of Drawings marked B. referred to in the annexed Letters of Registration granted to Edmund Schmeja, this thirteenth day of November A.D. 1879.

Augustus Loftus.

PHOTO-LITHOGRAPHED AT THE GOVT. PRINTING OFFICE, SYDNEY, NEW SOUTH WALES.

Fig. 8.

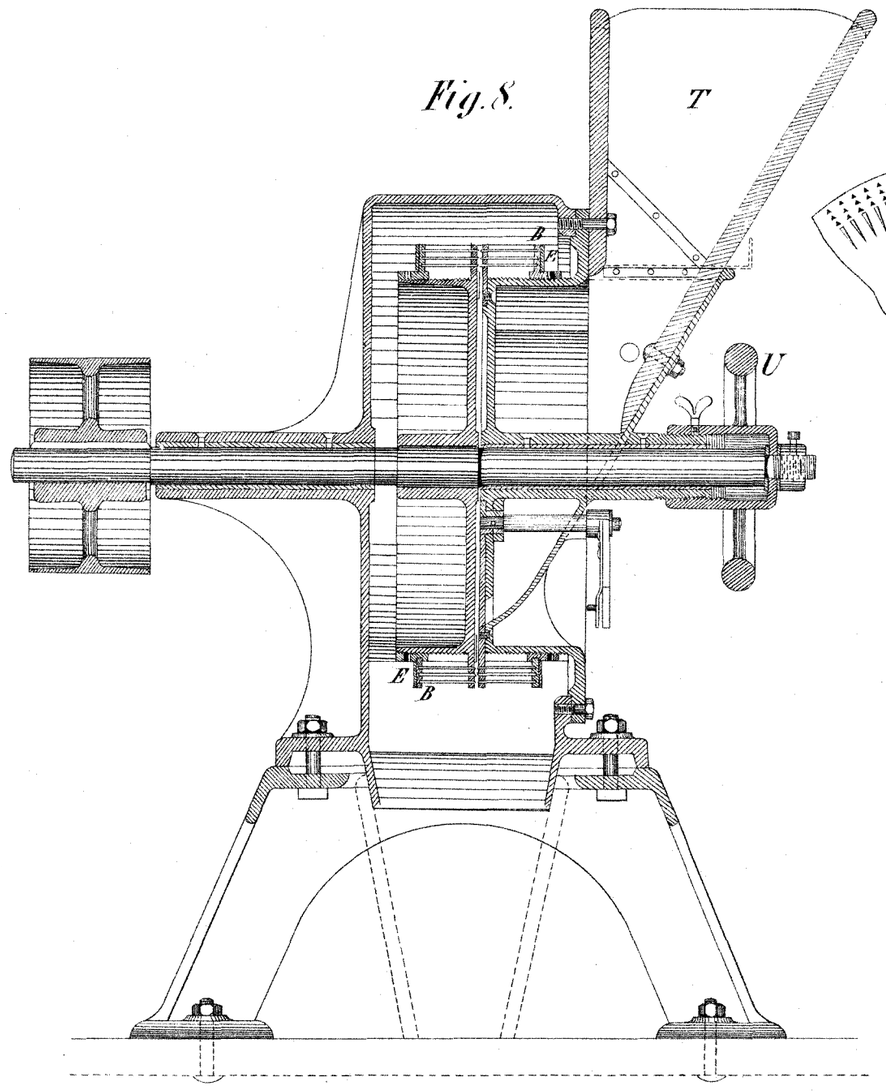

Fig. 9.

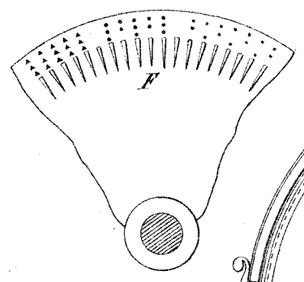

Fig. 10.

This is the Sheet of Drawings marked C. referred to in the annexed Letters of Registration granted to Edmund Schmija this thirteenth day of November A.D. 1879.

Augustus Loftus.

PHOTOLITHOGRAPHED AT THE GOVT. PRINTING OFFICE SYDNEY, NEW SOUTH WALES

Fig.13.

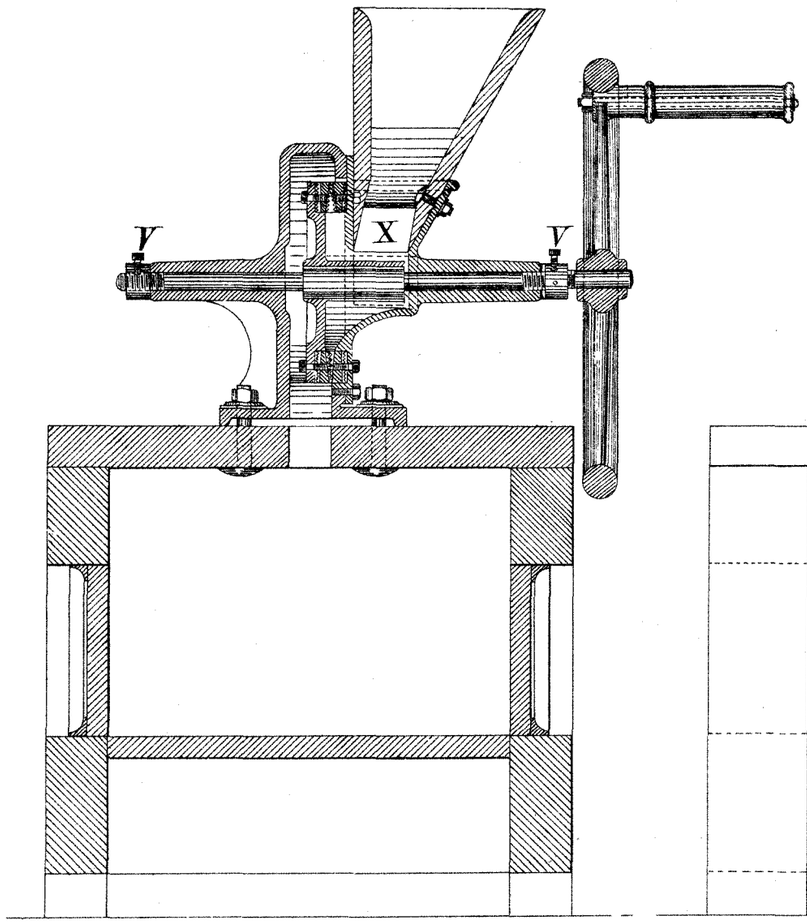

Fig.14.

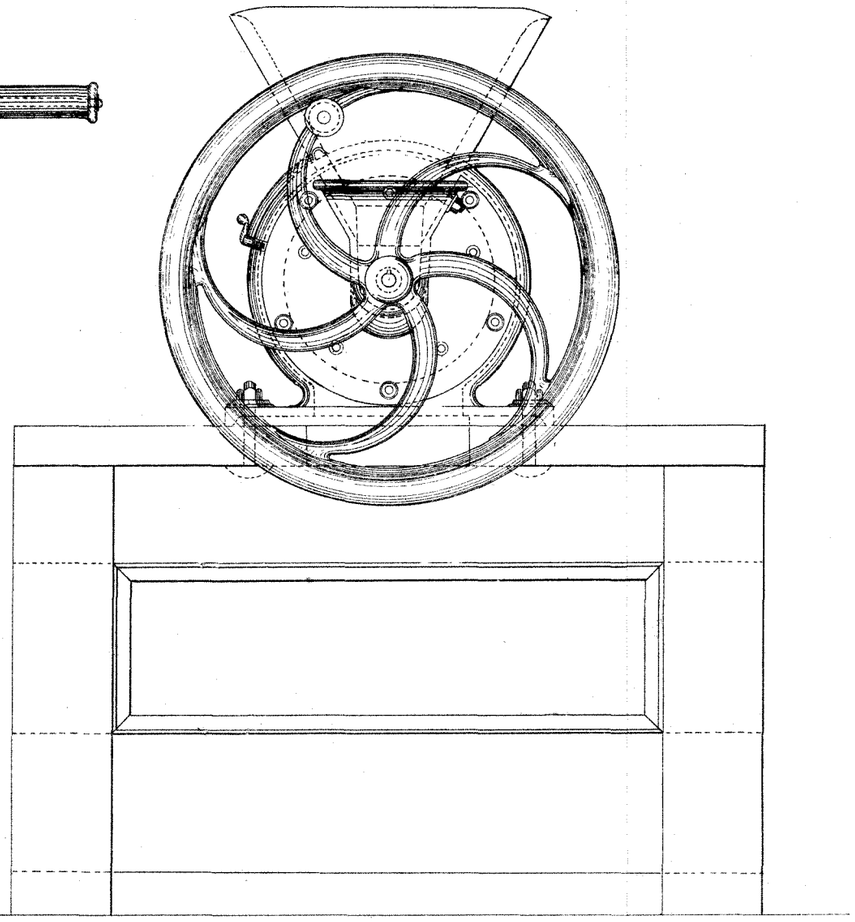

Fig.16.

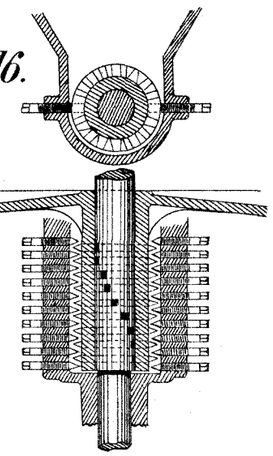

Fig.15.

This is the Sheet of Drawings marked D. referred to in the annexed Letters of Registration granted to Edmund Schmija this thirteenth day of November A. D. 1879.

Augustus Loftus.

PHOTO-LITHOGRAPHED AT THE GOVT. PRINTING OFFICE
SYDNEY, NEW SOUTH WALES

A.D. 1879, 13*th November.* No. 779.

IMPROVEMENTS IN TREATING THE JUICE OF THE SUGAR-CANE, AND IN MANUFACTURING SUGAR THEREFROM.

LETTERS OF REGISTRATION to Robert Tooth, for Improvements in treating the juice of the Sugar-cane, and in manufacturing Sugar therefrom.

[Registered on the 15th day of November, 1879, in pursuance of the Act 16 Vic. No. 24.]

BY His Excellency the Right Honorable Sir Augustus William Frederick Spencer Loftus (commonly called Lord Augustus Loftus), Knight Grand Cross of the Most Honorable Order of the Bath, a Member of Her Majesty's Most Honorable Privy Council, Governor and Commander-in-Chief of the Colony of New South Wales and its Dependencies.

TO ALL TO WHOM THESE PRESENTS SHALL COME, greeting:

WHEREAS Robert Tooth, formerly of Yougarie, Maryborough, in the Colony of Queensland, at present of parts beyond the seas, sugar manufacturer and refiner, hath by his Petition humbly represented to me that he is the author or designer of a certain invention or improvement in manufactures, that is to say, of an invention for "Improvements in treating the juice of the Sugar-cane, and in manufacturing Sugar therefrom," which is more particularly described in the specification which is hereunto annexed; and that he, the said Petitioner, hath deposited with the Honorable the Treasurer of the said Colony of New South Wales the sum of Twenty Pounds sterling, for defraying the expense of granting these Letters of Registration, as required by the Act of Council, sixteenth Victoria, number twenty-four; and hath humbly prayed that I would be pleased to grant Letters of Registration, whereby the exclusive enjoyment and advantage of the said invention or improvement might be secured to him for a period of fourteen years: And I, being willing to give encouragement to all inventions and improvements in the arts or manufactures which may be for the public good, and having received a report favourable to the prayer of the said Petition, from competent persons appointed by me to examine and consider the matters stated therein and to report thereon for my information, am pleased, with the advice of the Executive Council, and in exercise of the power and authority given to me by the said Act of Council, to grant, and do by these Letters of Registration grant unto the said Robert Tooth, his executors, administrators, and assigns, the exclusive enjoyment and advantage of the said invention or improvement, for and during the term of fourteen years from the date hereof; to have, hold, and exercise unto the said Robert Tooth, his executors, administrators, and assigns, the exclusive enjoyment and advantage thereof, for and during and unto the full end and term of fourteen years from the date of these presents next and immediately ensuing, and fully to be complete and ended: Provided always, that if the said Robert Tooth shall not, within three days after the granting of these Letters of Registration, register the same in the proper office in the Supreme Court, at Sydney, in the said Colony of New South Wales, then these Letters of Registration, and all advantages whatsoever hereby granted, shall cease and become void.

In witness whereof, I have hereunto set my sign manual, and have caused the present Letters of Registration to be sealed with the seal of the said Colony of New South Wales, at Government House, Sydney, in New South Wales, this thirteenth day of November, in the year of our Lord one thousand eight hundred and seventy-nine.

[L.S.] AUGUSTUS LOFTUS.

In the Supreme Court of New South Wales.

On this fifteenth day of November, in the year one thousand eight hundred and seventy-nine, of number seventeen, Bridge-street, Sydney, in the Colony of New South Wales, clerk to Messrs. Lyons, Creagh, and Williams, solicitors, being duly sworn, maketh oath and saith as follows:—

1. The foregoing writing contained in this page is a true copy of the original Letters of Registration.

P. KELLY.

Sworn by the deponent on the day first above mentioned, at Sydney, before me,—

E. Baly, a Commissioner for Affidavits.

SPECIFICATION

Improvements in treating the juice of the Sugar-cane,

SPECIFICATION relating to improvements in treating the juice of the Sugar-cane, and in manufacturing Sugar therefrom.

My invention consists of the improvements hereinafter described in treating the juice of the sugar-cane, and in manufacturing sugar therefrom. My present invention resembles in part a previous invention of mine, for which Letters of Registration were granted to me on the thirtieth day of September, one thousand eight hundred and seventy-two, and, as regards this part, consists in improvements on the process and mode of procedure described in the specification appended to the said Letters of Registration, but in other parts it differs essentially from the said invention.

The objects of my invention are :—

1st. To preserve the juice of the sugar-cane without the same becoming decomposed, and without incurring loss of the crystallizable sugar which it contains, until the said sugar be extracted from the juice.

2nd. To extract the crystallizable sugar from the said juice more perfectly than is effected by the ordinary method, so as to diminish the waste or loss which occurs in the ordinary processes of extracting sugar from cane-juice.

3rd. To obtain sugar of better quality than can be obtained from the same raw juice at the same cost by the ordinary processes.

According to the ordinary process of manufacturing raw sugar from cane-juice, the juice which has been expressed from the canes, and which contains in addition to crystallizable sugar a considerable (though variable) proportion of mucilaginous and colouring matters, and various other organic constituents of the sugar-cane, is heated in open pans and concentrated, and sometimes while the liquor is hot and partly concentrated a little lime is added, the whole of these operations being performed quickly after the juice has been expressed from the canes. The object of these processes is to remove a portion of the mucilaginous, colouring, and other organic constituents from the juice as rapidly as possible, and to concentrate it for crystallization before it has had time to ferment or become decomposed, since such decomposition would produce acidity of the juice, and then, in consequence of this acidity, a part of the crystallizable sugar would be destroyed.

In carrying out this process, it is necessary that the juice expressed from the canes should be immediately subjected to the subsequent processes, and in practice this necessity causes much extra expense, since the factories are only able to be kept at work during part of the year, and even then the processes cannot be carried on sufficiently quick to prevent a considerable amount of loss being incurred.

Now the object of the first part of my invention is to obviate this inconvenience, extra cost, and loss, by so treating the juice as to prevent its decomposition for a considerable time, and therefore to allow of the manufacture of the sugar being more continuous, and also to allow of the juice from small plantations, where the produce is not sufficient to yield a fair profit on manufacture by the ordinary process, to be so prepared that it can be pumped through pipes for distances of (say) some miles to a central factory, where a continuous process of purification and manufacture, as subsequently described herein, may be carried on on a larger and more economical scale.

To effect this object I treat the crude cane-juice as follows, *i.e.* :—

1st. I prepare a solution of caustic lime by slacking caustic lime with a small proportion of water, and subsequently adding more water or preferably cane-juice, so forming what is commonly called milk of lime. I carry on this operation so as to avoid as far as possible carbonating the lime.

2nd. I add this milk of lime, so prepared, to the crude cane-juice as soon as practicable after being expressed from the sugar-canes. The proportion in which I add it depends to a certain extent on the character of the juice; and while a sufficiency must be added in every case, it is desirable to avoid any great excess. The proportion necessary will generally be such that between 1 and 3 per cent. of lime shall be added to the juice to be preserved. If the juice is quite fresh, free from acidity, of good colour, and the specific gravity is less than 10° Baume, $1\frac{1}{2}$ per cent. of lime will be sufficient; but if the juice has been pressed from damaged canes, or if it is in any other way decomposed, or if it contains more mucilaginous matter or more acid than usual, or if it contains an excessive proportion of uncrystallizable sugar, the proportion of lime must be increased until in some cases as much as 3 per cent. may be required. As a rule, the larger the amount of impurities present, the larger must be the amount of the lime added, and this rule may be taken as invariable, whatever the character of the impurities is. It is, however, necessary that if the juice has, owing to any cause, become acid, a sufficiency of lime must be added to neutralize this acidity, and then act in the proper manner on all the other organic impurities which hinder the precipitation. It is essential that this lime should be added to the juice while the latter is cold, or at any rate not above 100° Fahr. in temperature, since a greater heat would partly coagulate the albuminous matters, and so injuriously affect the character of the juice. In this point, therefore, my invention differs entirely from the old process, since I carefully avoid heating the juice at this stage, or even adding the lime while the liquor is hot. The addition of the lime in this way effects several important results :—

1st. It neutralizes any free acid which may be present in the juice.

2nd. It will immediately absorb and neutralize any acid which may be subsequently formed or set free in the juice.

3rd. It combines with or mechanically fixes some parts of the organic impurities contained in the juice.

4th. It greatly decreases or entirely removes the liability of the juice to fermentation.

When

When cane-juice has been treated with lime, as hereinbefore described, it can be preserved in tanks or reservoirs for a considerable time without undergoing fermentation or decomposition, or it can be pumped long distances through pipes, or can be conveyed in tanks or vessels without undergoing any sensible deterioration.

In order to effect the second and third parts of my invention I proceed as follows, *i.e.*, I treat the crude cane-juice while cold with lime; I then pass into the lime-juice while still cold a current of carbonic acid gas, but I stop this current of gas at a certain stage before the whole of the lime has been carbonated; I then boil the juice, then filter it, then again pass a current of carbonic acid gas, preferably while the juice is hot, and then again filter the juice, all as hereinafter described. It will thus be seen that I adopt several novel and special processes, and it is by means of these processes that I am enabled to obtain sugar of better quality and in larger quantity than has heretofore been obtained from the same quality of juice. The detailed description of my various processes is as follows. I will describe first the complete process which I ordinarily adopt, and then a modification of it which I sometimes find advantageous.

If I am going to treat crude cane-juice for the purpose of making sugar therefrom, I add lime to it (preferably in the form of milk of lime which has been diluted with cane-juice), exactly as I have hereinbefore described with reference to my previous process for the preservation of cane-juice from decomposition. I use the lime in the same proportion as hereinbefore described, *i.e.*, from 1 to 3 per cent., according to the degree of purity or otherwise, and the strength of the juice to be treated.

If the cane-juice which I am going to use has been properly treated with lime as hereinbefore described, for the purpose of preserving it, it will not be necessary to add more lime when I am going to make sugar therefrom, but if an insufficient quantity of lime has been added in the first instance, it will be necessary to add more at this stage in order to make up the deficiency. It is proper, however, to use the smallest quantity of lime which is capable of effecting the necessary degree of purification.

I do not heat the juice at this stage, but on the contrary, it is essential that the temperature at which the next process is to be carried out should not exceed 95° or 100° Fahr., and I prefer a still lower temperature of 65° to 75° Fahr. The lime which has been added to the juice is at this stage in combination with the acids, sugar, and organic matters present in the juice, a portion of it being combined with the crystallizable sugar, forming a compound called mono-sucrate of lime, and another portion with the uncrystallizable sugar, forming a compound called glucate of lime. The remainder of the lime is combined with the acids and the other organic matters present.

Now my next process consists in decomposing the above-mentioned mono-sucrate of lime and glucate of lime, by means of carbonic acid gas added while the juice is cold, and subsequent boiling. I effect this decomposition as follows:—I pass a current of carbonic acid gas into the cold liquor contained in any suitable vessel, in which it should be kept in a state of agitation during the process.

This carbonic acid gas combines with the lime, and forms an insoluble compound known as carbonate of lime.

If I were to pass the current of carbonic acid gas until all the lime was converted into carbonate of lime, I should completely decompose the compounds above referred to, and liberate all the impurities again—I should in fact effect no greater degree of purification than is effected by the ordinary process of treating cane-juice.

I do not however continue the current of carbonic acid gas for such a length of time as to effect this injurious result, but on the contrary, one of the leading points of my invention is to continue this current of carbonic acid gas only for so long a time as to convert about two-thirds of the lime which has been present as mono-sucrate of lime into carbonate of lime, and thus cause the residue of the said lime which was in the said combination to form with the sugar the compound known as tri-sucrate of lime; this compound is of a gelatinous character, and has a tendency to agglomerate with part of the carbonate of lime present. Two methods may be adopted in order to ascertain whether the carbonic acid gas has been added to the proper extent.

1st. The total amount of lime present in the juice before treatment may be determined by any suitable chemical process (for instance, by adding a considerable excess of sugar solution to a known quantity of the juice, and litrating the mixture with an acid solution). After passing the carbonic acid for a time, a sample of the juice may be filtered and again tested in the same way. If in the latter case the proportion of lime found to be present is about one-third of that found in the original juice, the current of carbonic acid gas may be discontinued; if, on the other hand, a larger proportion of lime is still left, the current of carbonic acid gas must be continued longer and another test made. As a confirmatory proof of the chemical changes which take place in the process, it will be found that a portion of the liquid which has been filtered from the precipitate at the proper stage, as hereinbefore described, will contain a smaller proportion of sugar than would be the case if the current of carbonic acid gas were continued until all the lime had been converted into carbonate of lime, and on the other hand it will be found that the residue which remains on the filter contains both lime and sugar.

This is undoubtedly the most accurate method of ascertaining the exact point at which to stop the supply of gas, but after some practice by this method it will be found possible to determine the exact point by my second method, viz., by carefully noting the exact moment at which the juice acquires a more gelatinous character, and the appearance of the froth originally produced changes. After some practice by my first method it will be found possible, and even easy, to find when this point is reached, and it will be found that this corresponds as nearly as may be with the point when two-thirds of the lime present in the mono-sucrate of lime has been converted into carbonate of lime. Having completed this treatment of the cold juice with carbonic acid gas, I proceed to treat the juice by my next process, which consists in simply boiling the treated juice for a short time—a few minutes is in most cases quite long enough; it is, however, essential that the temperature should actually be raised to boiling point. This boiling produces a great change in the precipitate or compound which was formed by the carbonic acid; it

entirely

entirely destroys its gelatinous character, and causes it to assume a granular form, so as to separate easily from the juice by subsidence or filtration. My next process consists in filtering the boiled juice while still hot. The temperature during filtration should be maintained nearly at boiling point. It will be found that much of the colouring matters and organic impurities of the juice have been left behind in the precipitate, and the filtered juice will consequently be purified to a very great extent. The precipitate remaining in the filter should be washed by hot water or steam, so as to remove and save any adhering sugar. The filtered juice still retains a certain proportion of lime, and the object of my next process is to remove this lime and purify the juice still more. To effect this, the filtered juice is passed while hot into a suitable vessel, and, if necessary, heated again, and treated a second time with a current of carbonic acid gas. It is desirable that this re-gasing should be performed at a temperature of at least 160° Fahr., because if the temperature is lower than this much more time will be occupied, and the result will be inferior. The current of carbonic acid gas must be continued this time until all the lime is precipitated in the form of carbonate of lime mixed with a small proportion of other lime compounds. As soon as the formation of precipitate has ceased, the current of gas is stopped, and the juice again boiled for a few minutes to drive off any excess of carbonic acid gas. The boiled juice is then again filtered. This second filtration removes the carbonate of lime and some other insoluble lime salts, and effects a still further purification of the juice. If these various processes have been properly conducted, the juice will now be of very good colour, and almost entirely free from glucose, mucilaginous matter, or other organic compounds; and if it be evaporated in the usual way in vacuum pans, it will produce a sugar of better colour and greater purity than could have been produced from the same cane-juice by the ordinary process.

I prefer, however, to submit the juice to one more filtration through animal charcoal before I evaporate it, as by this means I remove any traces of lime still present, and render the juice so pure that white sugar can be made from it direct.

I have found, by actual experiment, that the amount of animal charcoal necessary for this filtration is very much less than that required for the filtration of juice treated in the ordinary way, and therefore the thickness of the filtering beds may be very greatly reduced, a great saving being thus effected in the amount of charcoal necessary.

After passing through the charcoal, the fully purified juice is ready for evaporation, and it will be found to yield a sugar of great purity, and in every respect of excellent quality.

I sometimes find it advantageous to modify slightly the process which I have already described, and I then proceed as follows:—

I take a quantity of very rich cane-juice containing more than the usual percentage of sugar, and while it is cold I add milk of lime, also cold, prepared as hereinbefore directed, in such a proportion that the lime shall be equal to about one-fifth of the sugar present. The exact proportion is not material, but it is desirable to add as much as can be properly treated.

Having thus formed a solution of mono-sucrate of lime, similar to that which I have previously described, but differing therefrom in being a much stronger solution, I proceed to pass a current of carbonic acid gas into this solution while cold, so as to convert the mono-sucrate of lime into tri-sucrate of lime and carbonate of lime, but I do not continue the current of gas long enough to convert all the lime into carbonate of lime, but on the contrary, I stop it while about one-third of the lime is still in combination with sugar, exactly as I have already described in reference to my ordinary process of treating juice. The difference between this modification of the process and the first consists up to this stage simply in using a stronger juice with a larger proportion of lime, and therefore making therefrom a stronger solution of the tri-sucrate of lime. Having thus made a gelatinous solution of the tri-sucrate of lime, I add this solution in the necessary proportion to the bulk of the juice to be purified while the said juice is cold, instead of adding milk of lime to the said juice as hereinbefore directed. I add this solution of tri-sucrate of lime to the juice in such proportion that the lime added shall be equal, or nearly so, to that which I have already directed to be added to crude cane-juice for the purpose of purification.

Having added this tri-sucrate to the cold juice, I intimately mix them together, but I do not at this stage pass a current of carbonic acid through the juice, because the mono-sucrate of lime which was formed in the stronger juice has already been converted into the tri-sucrate, but I proceed at once to boil the juice for a short time, and then to filter it while hot; I again pass a current of carbonic acid gas through the hot liquor until all the residue of lime is precipitated, and again boil it to drive off any excess of carbonic acid gas, and again filter it. The filtered juice is then ready for filtration through charcoal, and subsequent evaporation, or if so desired, for evaporation without the filtration through animal charcoal. The practical results of my process, whether it be carried out as first hereinbefore described or by this second modification of it, will be identical.

One or two points need special attention in order to carry the process out successfully. The juice should always be free from the slightest trace of acidity, even when boiling in the vacuum pan, and I prefer to have generally a very slight alkaline re-action.

The various precipitates should be carefully washed in any suitable manner, in order to extract the sugar which they contain, and the resulting sweet waters may be used for slacking the lime to be used, or be worked up in any other suitable way.

Having thus described the nature of my invention of improvements in treating the juice of the sugar-cane and in manufacturing sugar therefrom, I wish it to be distinctly understood that I do not claim the use of lime *per se*, or of carbonic acid *per se*, or of lime and carbonic acid used jointly, in the method ordinarily adopted in beet-sugar-making, because my process differs totally from all of these; neither do I claim the process for which I have already obtained the Letters of Registration hereinbefore referred to, because by my present invention I treat the juice in such a way as to prevent decomposition at the moment it is pressed from the canes, and so enable it to be stored in reservoirs or pumped through pipes without injury, instead of allowing it to ferment while stored and afterwards endeavouring to remove

remove the organic impurities which have been so produced. I then treat the limed juice so as to obtain different chemical products from those named in the before-mentioned Letters of Registration, and I do not use a closed boiler for the purpose of decomposing the compound which I now form in the process of sugar-making, but what I do claim as my invention is—

The treatment of the juice of the sugar-cane so as to preserve it from decomposition, or so as to purify it, and the manufacture of sugar from cane-juice so treated by the addition of carbonic acid gas to the juice which has been treated with lime as aforesaid, so as only to carbonate about two-thirds of the lime, thereby causing the residue of the lime to form with the sugar the compound known as tri-sucrate of lime, and substantially in the manner hereinbefore described.

In witness whereof, I, the said Robert Tooth, have hereunto set my hand and seal, this seventh day of October, in the year of our Lord one thousand eight hundred and seventy-nine.

ROBERT TOOTH,
By his Attorney,
MAURICE LYONS.

Signed, sealed, and delivered, by the said Robert Tooth, by his Attorney, Maurice Lyons, in the presence of—

P. KELLY, Clerk to Messrs. Lyons, Creagh, and Williams,
Solicitors, Sydney.

This is the specification referred to in the annexed Letters of Registration granted to Robert Tooth, this thirteenth day of November, A.D. 1879.

AUGUSTUS LOFTUS.

REPORT.

Sir, Sydney, 18 October, 1879.

The application of Mr. Robert Tooth, for Letters of Registration, for "Improvements in treating the juice of the Sugar-cane and in manufacturing Sugar therefrom," having been referred to us, we have examined the specification accompanying the same, and have now the honor to report that we see no objection to the issue of Letters of Registration as prayed for.

We have, &c.,
J. SMITH.
CHAS. WATT.

The Principal Under Secretary.

A.D. 1879, 17*th November*. No. 780.

IMPROVEMENTS IN CLOTHES-WASHING MACHINES.

LETTERS OF REGISTRATION to John Walls, for Improvements in Clothes-washing Machines.

[Registered on the 18th day of November, 1879, in pursuance of the Act 16 Vic. No. 24.]

BY His Excellency the Right Honorable Sir Augustus William Frederick Spencer Loftus (commonly called Lord Augustus Loftus), Knight Grand Cross of the Most Honorable Order of the Bath, a Member of Her Majesty's Most Honorable Privy Council, Governor and Commander-in-Chief of the Colony of New South Wales and its Dependencies.

TO ALL TO WHOM THESE PRESENTS SHALL COME, greeting:

WHEREAS John Walls, of Camperdown, in the Colony of Victoria, coach-builder, hath by his Petition humbly represented to me that he is the author or designer of a certain invention or improvement in manufactures, that is to say, of an invention for "Improvements in Clothes-washing Machines," which is more particularly described in the specification and the sheet of drawings which are hereunto annexed; and that he, the said Petitioner, hath deposited with the Honorable the Treasurer of the said Colony of New South Wales the sum of Twenty Pounds sterling, for defraying the expense of granting these Letters of Registration, as required by the Act of Council, sixteenth Victoria, number twenty-four; and hath humbly prayed that I would be pleased to grant Letters of Registration, whereby the exclusive enjoyment and advantage of the said invention or improvement might be secured to him for a period of fourteen years: And I, being willing to give encouragement to all inventions and improvements in the arts or manufactures which may be for the public good, and having received a report favourable to the prayer of the said Petition, from competent persons appointed by me to examine and consider the matters stated therein, and to report thereon for my information, am pleased, with the advice of the Executive Council, and in exercise of the power and authority given to me by the said Act of Council, to grant, and do by these Letters of Registration grant unto the said John Walls, his executors, administrators, and assigns, the exclusive enjoyment and advantage of the said invention or improvement, for and during the term of fourteen years from the date hereof; to have, hold, and exercise unto the said John Walls, his executors, administrators, and assigns, the exclusive enjoyment and advantage thereof, for and during and unto the full end and term of fourteen years from the date of these presents next and immediately ensuing, and fully to be complete and ended: Provided always, that if the said John Walls shall not, within three days after the granting of these Letters of Registration, register the same in the proper office in the Supreme Court at Sydney, in the said Colony of New South Wales, then these Letters of Registration, and all advantages whatsoever hereby granted, shall cease and become void.

In witness whereof, I have hereunto set my sign manual, and have caused the present Letters of Registration to be sealed with the seal of the said Colony of New South Wales, at Government House, Sydney, in New South Wales, this seventeenth day of November, in the year of our Lord one thousand eight hundred and seventy-nine.

[L.S.]

AUGUSTUS LOFTUS.

Improvements in Clothes-washing Machines.

TO ALL TO WHOM THESE PRESENTS SHALL COME, I, JOHN WALLS, of Camperdown, in the Colony of Victoria, coach-builder, send greeting:

WHEREAS I am desirous of obtaining Royal Letters Patent for securing unto me Her Majesty's special license that I, my executors, administrators, and assigns, and such others as I or they should at any time agree with, and no others, should and lawfully might from time to time, and at all times during the term of fourteen years, to be computed from the day on which this instrument shall be left at the office of the Registrar General of the Colony of New South Wales, make, use, exercise, and vend within the said Colony and its dependencies, an invention for "Improvements in Clothes-washing Machines"; and in order to obtain the said Letters Patent I must, by an instrument in writing under my hand and seal, particularly describe and ascertain the nature of the said invention, and in what manner the same is to be performed, and must also enter into the covenant hereinafter contained: Now know ye that the nature of the said invention, and the manner in which the same is to be performed, is particularly described and ascertained in and by the following statement, that is to say:—

My invention consists of a tank or trough made of either wood or metal, the bottom of which is curved or rounded, as shown in figure 2 of the drawings deposited herewith. The inner surface of the curved part is corrugated, as shown at A in said figure. This tank is fixed in a substantial frame, as lettered D in the drawings. Three floats or beaters, F (made with perforations through them), fixed to the ends of levers, L, work in this tank. These levers are fixed to shaft E, which shafts are hinged into the top of the machine, as shown in the drawings. The levers are connected to a crank shaft, C, by means of rods, R, the crank shaft working in bearings supported by brackets, B, affixed to the frame of the machine. The cranks are so arranged that when the machine is in use the motion of the beaters is not together but alternating. The machine is worked by a wheel, W, supplied with a handle, H, as shown in the drawings.

Figure 1 represents the machine in section lengthwise, and shows the floats or beaters with their levers and connections; figure 2 shows the machine in section as with one end removed; figure 3 shows the machine as it appears from the top with the cover open; and figure 4 shows the machine in perspective.

To use the machine the tank must be partly filled with water, and soap, soda, or any washing compound added at pleasure. The articles to be washed are put into the machine by opening the top cover, as shown in figures 2 and 4. The cover is then closely shut, and the wheel W set in motion by using the handle H. The crank revolving causes the floats or beaters connected therewith to beat on the articles in the machine, pressing the same against the corrugations of the tank, and the same are thereby rendered clean.

CLAIM.

I do not confine myself to the exact details as herein described, but I do claim the invention of the floats or beaters, fixed and worked substantially in the manner as herein described.

And I do hereby, for myself, my heirs, executors, and administrators, covenant with Her Majesty, Her Heirs and Successors, that I believe the said invention to be a new invention, as to the public use and exercise thereof, and that I do not know or believe that any other person than myself is the true and first inventor of the said invention, and that I will not deposit these presents at the office of the said Registrar General with any such knowledge or belief as last aforesaid.

In witness whereof I have hereunto set my hand and seal, this day of A.D. 1879.

JOHN WALLS.

Signed, sealed, and delivered, by the said John Walls, in the presence of,—

CHARLES C. HUDSON,
Camperdown, Victoria.

This is the specification referred to in the annexed Letters of Registration granted to John Walls, this seventeenth day of November, A.D. 1879.

AUGUSTUS LOFTUS.

REPORT.

Sydney, 20 October, 1879.

Sir,

We do ourselves the honor to state that we see no objection to the issue of Letters of Registration, in terms of Mr. John Walls' Petition, specification, drawings, and claim, for "Improvements in Clothes-washing Machines," transmitted for our report under your blank cover communication of the 10th instant, No. 8,051.

We have, &c.,
GOTHER K. MANN.
ROBERT GEO. MASSIE.

The Principal Under Secretary.

[Drawings—one sheet.]

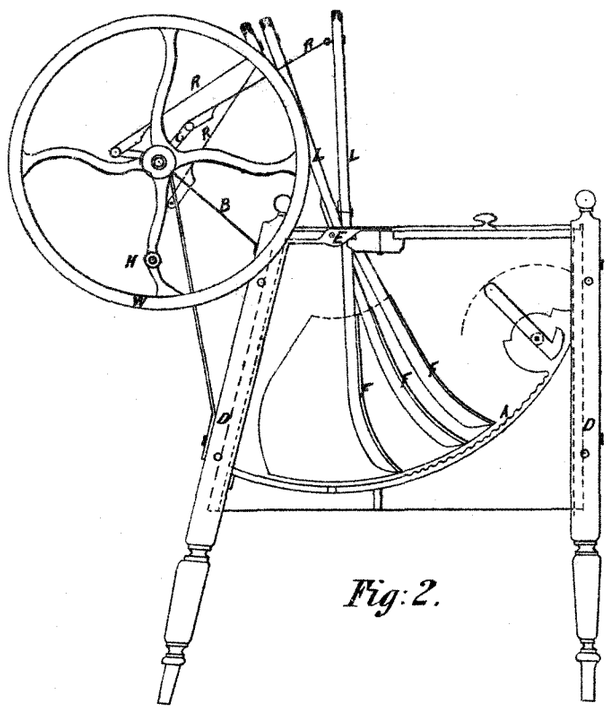

Fig: 2.

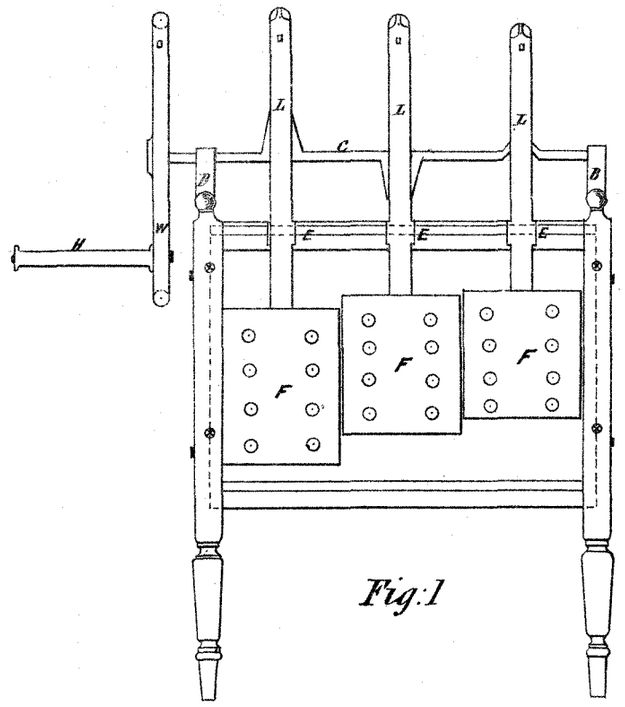

Fig: 1

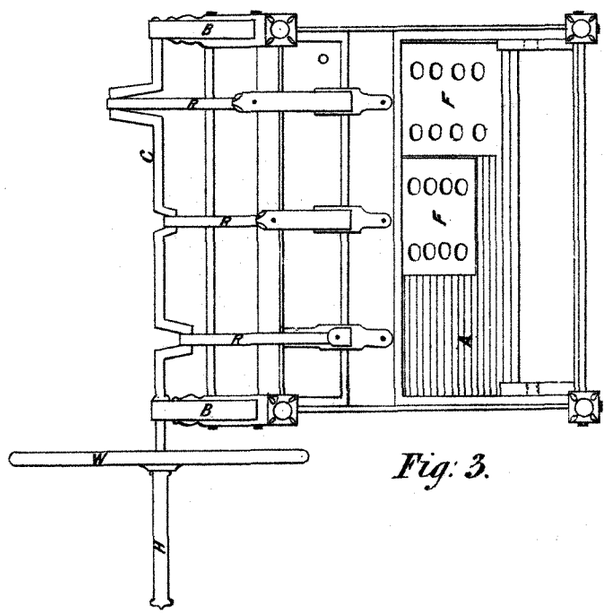

Fig: 3.

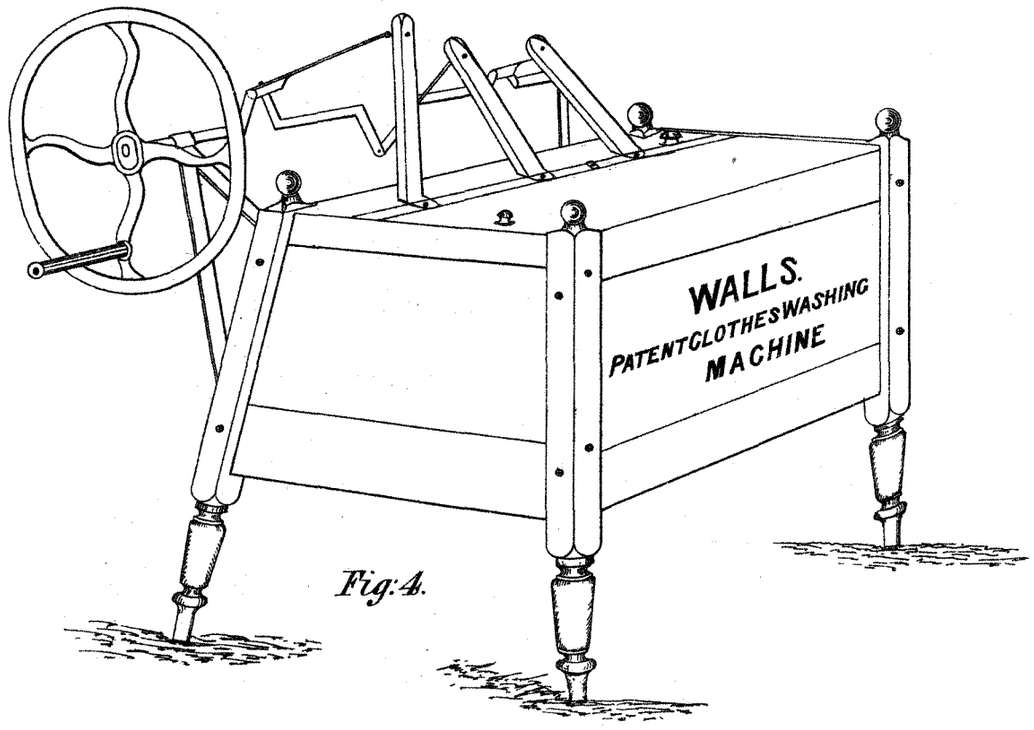

Fig: 4.

This is the Sheet of Drawings referred to in the annexed Letters of Registration granted to John Walls, this seventeenth day of November, A.D. 1879 Augustus Loftus.

John Walls
Patentee
Camperdown
Victoria

PHOTO-LITHOGRAPHED AT THE GOVT. PRINTING OFFICE
SYDNEY NEW SOUTH WALES

A.D. 1879, 17*th November*. No. 781.

IMPROVEMENTS IN WIRE-STRAINING MACHINERY.

LETTERS OF REGISTRATION to William Humble and Ward Nicholson, for Improvements in Machinery for Straining and retaining the Strain on Wire between two fixed points, such as in wire fencing.

[Registered on the 19th day of November, 1879, in pursuance of the Act 16 Vic. No. 24.]

BY His Excellency the Right Honorable Sir Augustus William Frederick Spencer Loftus (commonly called Lord Augustus Loftus), Knight Grand Cross of the Most Honorable Order of the Bath, a Member of Her Majesty's Most Honorable Privy Council, Governor and Commander-in-Chief of the Colony of New South Wales and its Dependencies.

TO ALL TO WHOM THESE PRESENTS SHALL COME, greeting:

WHEREAS William Humble and Ward Nicholson, both of the Vulcan Foundry, Little Malop-street, Geelong, in the Colony of Victoria, ironfounders, have by their Petition humbly represented to me that they are the assignees of James Ferrier, junior, who is the author or designer of a certain invention or improvement in manufactures, that is to say, of an invention intituled "Improvements in Machinery for Straining and retaining the Strain on Wire between two fixed points, such as in wire fencing," which is more particularly described in the specification and the sheet of drawings which are hereunto annexed; and that they, the said Petitioners, have deposited with the Honorable the Treasurer of the said Colony of New South Wales the sum of Twenty Pounds sterling, for defraying the expense of granting these Letters of Registration, as required by the Act of Council, sixteenth Victoria, number twenty-four; and have humbly prayed that I would be pleased to grant Letters of Registration, whereby the exclusive enjoyment and advantage of the said invention or improvement might be secured to them for a period of fourteen years: And I, being willing to give encouragement to all inventions and improvements in the arts or manufactures which may be for the public good, and having received a report favourable to the prayer of the said Petition, from competent persons appointed by me to examine and consider the matters stated therein and to report thereon for my information, am pleased, with the advice of the Executive Council, and in exercise of the power and authority given to me by the said Act of Council, to grant, and do by these Letters of Registration grant unto the said William Humble and Ward Nicholson, their executors, administrators, and assigns, the exclusive enjoyment and advantage of the said invention or improvement, for and during the term of fourteen years from the date hereof; to have, hold, and exercise unto the said William Humble and Ward Nicholson, their executors, administrators, and assigns, the exclusive enjoyment and advantage thereof, for and during and unto the full end and term of fourteen years from the date of these presents next and immediately ensuing, and fully to be complete and ended: Provided always, that if the said William Humble and Ward Nicholson shall not, within three days after the granting of these Letters of Registration, register the same in the proper office in the Supreme Court, at Sydney, in the said Colony of New South Wales, then these Letters of Registration, and all advantages whatsoever hereby granted, shall cease and become void.

In witness whereof, I have hereunto set my sign manual, and have caused the present Letters of Registration to be sealed with the seal of the said Colony of New South Wales, at Government House, Sydney, in New South Wales, this seventeenth day of November, in the year of our Lord one thousand eight hundred and seventy-nine.

[L.S.] AUGUSTUS LOFTUS.

SPECIFICATION

Improvements in Wire-straining Machinery.

SPECIFICATION of WILLIAM HUMBLE and WARD NICHOLSON, both of the Vulcan Foundry, Little Malop-street, Geelong, in the Colony of Victoria, ironfounders, for an invention intituled "Improvements in Machinery for Straining and retaining the Strain on Wire between two fixed points, such as in wire fencing."

THIS invention has been devised principally for the purpose of providing a cheap and expeditious method of taking in the sag or slack of the wires in wire fencing, and retaining it when so taken in. It consists of certain machinery for straining and retaining the strain put upon such wires for this purpose. Our machinery may be divided into two parts; first, the contrivance which fits on the wire and always remains there, and which we call the strainer; and second, the machine which operates such contrivance, making it the medium for putting the necessary strain upon the wire, in order to take in the slack or make it taut, and which we call the straining machine. This machine is portable, and is carried from one strainer to the other with the greatest ease.

Figures 1, 2, and 3 represent respectively a back, end, and top view of our straining machine. Figure 4 is a perspective view, on a larger scale, of our strainer; whilst figure 5 shows, on a much smaller scale, a length of fencing, with our machinery applied. A is a wooden framing, the vertical sides of which are pierced with a number of holes, as shown in figure 1. B is a horizontal sliding support, resting on pins B^1, placed in one or other of the holes in the side framing. B^2 are guide blocks, bolted to the support, to prevent its twisting. C is a handle for revolving pinion C^1, which gears into and drives the large toothed wheel D, the spindle of which carries a gripping or holding device E. Into this holding device we place the back flange F^1 of the strainer F. The front of this strainer has a groove, F^2, in its face, large enough to receive any sized wire, and the leading points F^3 of each half of the face is bevelled off, so as to give every facility for the wire slipping on to the reel F^4 between the face and the back flanges. F^5 are the pins for preventing the wire unwinding when once wound on to the reel of the strainer. G is the wire.

Our mode of operation is as follows:—Suppose it be an existing wire fence erected on the old principle, with straining posts at every four or five chains, that requires to be tightened up, we place our straining machine about midway between two straining posts with its face to the fence, we then adjust the sliding support B until it is on a level or nearly on a level with the top wire; we then push or pull the wire into the groove F^2 of the strainer, which has been previously put into the gripping device E in such a manner as that the groove is horizontal; we then turn the handle C; this revolves slowly the large wheel D and its spindle, together with the gripping device E, and the strainer therein F; this winds the wire on to the reel F^4 until all the slack is taken up, when we put two pins, F^5, through the holes in the strainer as shown, so as to prevent its unwinding; we then slip the strainer out of the gripper and leave it permanently on the wire to retain the strain given to it; and if at any time the wire again gets slack, the machine can be taken to the fence, the strainer adjusted in the gripper, and a fresh strain be put on the wire without the slightest difficulty.

When the top wire has been strained we take out the pins B^1, lower the sliding support to the level of the next wire, put a fresh strainer in the gripper, and then proceed exactly as before. By this means one man can tighten or strain a mile of wire fencing in an hour or so.

In the event of our invention being used in the erection of new wire fencing, a great saving might be effected by dispensing with the straining posts, which would then only be needed for gate posts and at the corners, and, furthermore, the strainers need not be placed nearer than about 10 chains apart, as shown in figure 5. Whilst the wire is being strained we strengthen the end posts H of the strain by stays J or guys K, or both, which can be removed after the fence is completed. We fasten the wire to these posts at the end of every 10 chains, and then tighten or strain the wires with our strainers and straining machine, as hereinbefore set forth and described.

We have said that our invention has been devised principally for the purpose of straining and retaining the strain on the wires of wire fencing; but it is evident that it is applicable for the purpose of straining and retaining the strain on wires between two fixed points, whether such wires be used as fences or not. Furthermore, it is equally evident that the precise shape of our strainer might be altered or modified without in any sense departing from the nature of our invention, therefore we do not confine ourselves to such shape, but we claim—

The strainer shown in figure 4, and the straining machine shown in figures 1, 2, and 3, for the purpose of straining and retaining the strain on wire between two fixed points, such as in wire fencing, substantially as herein described and explained.

In witness whereof, we, the said William Humble and Ward Nicholson, have hereto set our hands and seals, this sixth day of October, one thousand eight hundred and seventy-nine.

WILLLIAM HUMBLE,
(By his duly authorized attorney, WARD NICHOLSON).
WARD NICHOLSON.

Witness—
FREDERICK WILLIAM GRAVELY, Book-keeper, Geelong.

This is the specification referred to in the annexed Letters of Registration granted to William Humble and Ward Nicholson, this seventeenth day of November, A.D. 1879.

AUGUSTUS LOFTUS.

REPORT.

Sir, Sydney, 22 October, 1879.

We do ourselves the honor to state that we see no objection to the issue of Letters of Registration, in accordance with Messrs. William Humble and Ward Nicholson's Petition, specification, drawings, and claim, for an invention entitled "Improvements in Machinery for Straining and retaining the Strain on Wire between two fixed points, such as in wire fencing," transmitted for our report under your blank cover communication of the 14th instant, No. 8,072.

We have, &c.,
GOTHER K. MANN.
E. C. CRACKNELL.

The Principal Under Secretary.

[Drawings—one sheet.]

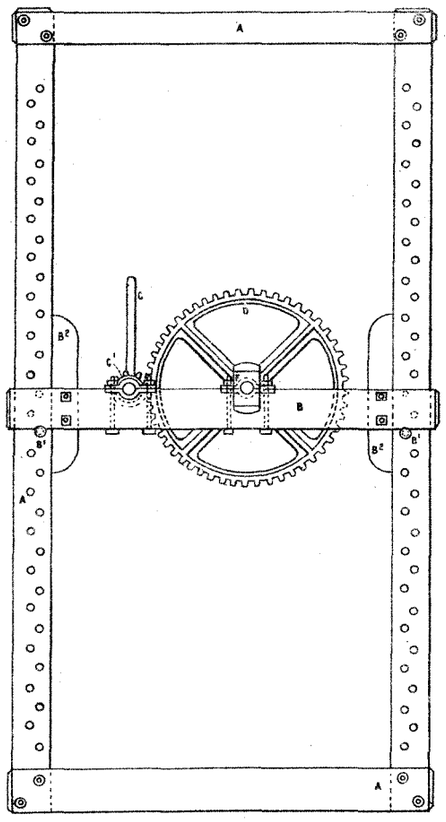

FIG. 1.

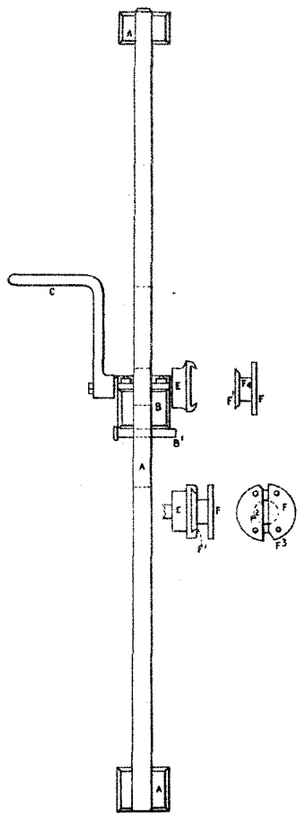

FIG. 2.

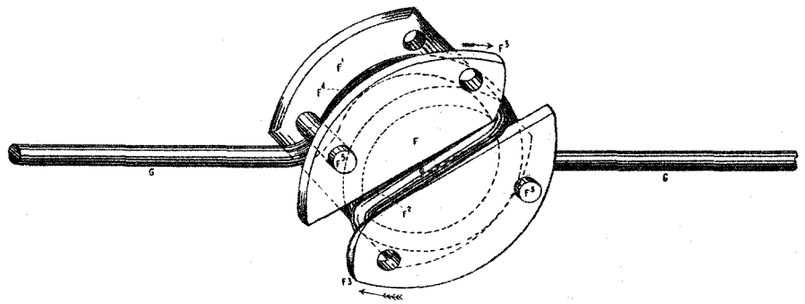

FIG. 4.

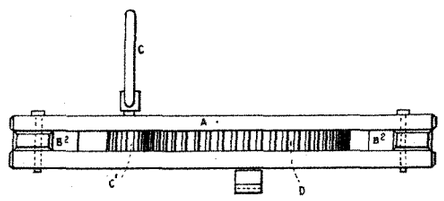

FIG. 3

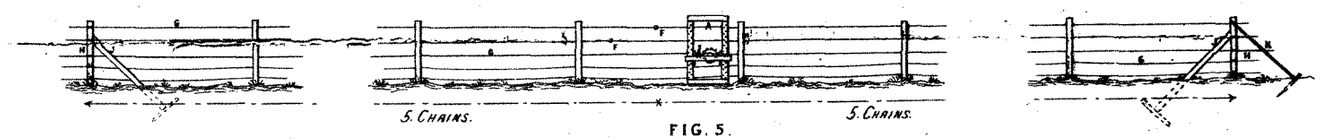

FIG. 5.

(Sig. 198.)

This is the ~~second~~ sheet of drawings referred to in the annexed Letters of Registration granted to William Humble and Ward Nicholson this Seventeenth day of November - A.D. 1879. -

"Augustus Loftus"

PHOTO-LITHOGRAPHED AT THE GOVT. PRINTING OFFICE,
SYDNEY, NEW SOUTH WALES.

A.D. 1879, 17*th November*. No. 782.

IMPROVEMENTS IN MANUFACTURING SUGAR.

LETTERS OF REGISTRATION to Robert Tooth, for Improvements in manufacturing Sugar.

[Registered on the 18th day of November, 1879, in pursuance of the Act 16 Vic. No. 24.]

BY His Excellency the Right Honorable Sir Augustus William Frederick Spencer Loftus (commonly called Lord Augustus Loftus), Knight Grand Cross of the most Honorable Order of the Bath, a Member of Her Majesty's Most Honorable Privy Council, Governor and Commander-in-Chief of the Colony of New South Wales and its Dependencies.

TO ALL TO WHOM THESE PRESENTS SHALL COME, greeting:

WHEREAS Robert Tooth, formerly of Yougarie, Maryborough, in the Colony of Queensland, at present of parts beyond the seas, sugar manufacturer and refiner, hath by his Petition humbly represented to me that he is the author or designer of a certain invention or improvement in manufactures, that is to say, of an invention for "Improvements in the Mode of and Apparatus for manufacturing Sugar," which is more particularly described in the specification, marked A, and the four sheets of drawings, marked B, C, D, and E, respectively, which are hereunto annexed; and that he, the said Petitioner, hath deposited with the Honorable the Treasurer of the said Colony of New South Wales the sum of Twenty Pounds sterling, for defraying the expense of granting these Letters of Registration, as required by the Act of Council, sixteenth Victoria, number twenty-four; and hath humbly prayed that I would be pleased to grant Letters of Registration, whereby the exclusive enjoyment and advantage of the said invention or improvement might be secured to him for a period of fourteen years: And I, being willing to give encouragement to all inventions and improvements in the arts or manufactures which may be for the public good, and having received a report favourable to the prayer of the said Petition, from competent persons appointed by me to examine and consider the matters stated therein and to report thereon for my information, am pleased, with the advice of the Executive Council, and in exercise of the power and authority given to me by the said Act of Council, to grant, and do by these Letters of Registration grant unto the said Robert Tooth, his executors, administrators, and assigns, the exclusive enjoyment and advantage of the said invention or improvement, for and during the term of fourteen years from the date hereof; to have, hold, and exercise unto the said Robert Tooth, his executors, administrators, and assigns, the exclusive enjoyment and advantage thereof, for and during and unto the full end and term of fourteen years from the date of these presents next and immediately ensuing, and fully to be complete and ended: Provided always, that if the said Robert Tooth shall not, within three days after the granting of these Letters of Registration, register the same in the proper office in the Supreme Court, at Sydney, in the said Colony of New South Wales, then these Letters of Registration, and all advantages whatsoever hereby granted, shall cease and become void.

In witness whereof, I have hereunto set my sign manual, and have caused the present Letters of Registration to be sealed with the seal of the said Colony of New South Wales, at Government House, Sydney, in New South Wales, this seventeenth day of November, in the year of our Lord one thousand eight hundred and seventy-nine.

[L.S.] AUGUSTUS LOFTUS.

In the Supreme Court of New South Wales.

On this eighteenth day of November, in the year one thousand eight hundred and seventy-nine, Philip Kelly, clerk to Messrs. Lyons, Creagh, and Williams, of number seventeen, Bridge-street, Sydney, in the Colony of New South Wales, solicitors, being duly sworn, maketh oath and saith as follows:

The foregoing writing contained in this page is a true copy of the original Letters of Registration.

Sworn by the deponent, on the day first above mentioned, at Sydney, before me,— P. KELLY.

E. Baly, a Commissioner for Affidavits.

A.D. 1879. No. 782.

Improvements in manufacturing Sugar.

A.

TO ALL TO WHOM THESE PRESENTS SHALL COME: I, ROBERT TOOTH, formerly of Yougarie, Maryborough, in the Colony of Queensland, at present of parts beyond the seas, sugar manufacturer and refiner, send greeting:

WHEREAS I am desirous of obtaining Letters of Registration under the sign manual and seal of the Colony of New South Wales, for the exclusive enjoyment and advantage for a period of fourteen years of an invention for improvements in the Mode of and Apparatus for manufacturing Sugar, of which I am the first and true inventor: Now know ye, that the nature of the said invention and the manner in which the same is to be performed, is particularly described and ascertained in and by the following statement (that is to say):—

The invention relates to certain improvements in the processes for converting the juice of the sugar-cane into sugar crystals. The system on which the invention is based is that known as the diffusion process, the object of which is to wash out the saccharine matter, in contra-distinction to expressing it from the cane.

The invention consists, firstly, in a novel arrangement of diffusion apparatus; secondly, in a chemical process for purifying the cane-juice; and thirdly, in an improvement in the charcoal filter.

In sheet 1 of the accompanying drawings, fig. 1 is a plan view of the apparatus for extracting the juice of the cane by the diffusion process; fig. 2 is a longitudinal vertical section of the same, taken in the line 1, 2, of fig. 1; and fig. 3 is a similar section of the apparatus, taken in the line 3, 4, of fig. 1.

This apparatus may be described as consisting of a series of tanks, through which a stream of water of a suitable temperature is caused to flow continuously, the water passing from the first or receiving tank to the others in succession.

Mounted above the last tank of the series is a cutting apparatus for reducing the sugar-canes as they are supplied thereto to thin slices, and discharging the slices into the tank below. Each tank is provided with an elevator, for carrying forward the sliced cane from one tank to the other until it arrives at the first tank, or that to which the water is first supplied. The sliced cane is moved forward to the elevators by a system of self-acting rakes, and when it has travelled through the series of tanks it will have parted with all its saccharine juice, and is then discharged from the apparatus by a second elevator with which the first tank is provided.

The cutting apparatus consists of two vertical discs fitted with knives, and working within a kind of double hopper, to which the sugar-canes are supplied by endless travelling webs.

This apparatus is shown detached and on an enlarged scale in sheets 2 and 3; fig. 1, sheet 2, being a side elevation, and fig. 2, sheet 3, an end elevation of the same, partly in section. A A are a pair of disc-plates, carrying each a series of knives arranged cylindrically upon them. The details of construction of these knives are shown at figs. 3 and 4, sheet 2.

The disc-plates A A are keyed to an horizontal shaft, B, which has its bearings in the framework C C, supported on the walls of the last tank of the series. Rotary motion is given to the discs A from any prime mover through a band that works on the band pulleys D of the shaft B.

The sugar-cane is fed to opposite sides of the cutting apparatus by means of endless travelling webs, E E, which webs deliver the canes respectively on to the rollers F, mounted in bearings on the end plates *f* of the hopper, and receiving rotary motion in the directions of the arrows, through a chain from a pulley on the shaft of the upper drum of the web. From these rollers the canes fall on to the sides of the hopper, which are formed of inclined boards, *f*, leading down to an inclined foot-piece, *f* 2, against which the canes rest while in the act of being cut. Between these inclined pieces are situate rotating guide rollers, *f* 3, whose office is to facilitate the passage downwards of the sugar-canes and to present them to the rotary cutters. These rollers receive motion from chains and pulleys on the axle of the roller F.

The endless webs E are driven by gearing, as indicated by the red circles in fig. 2.

I have said that the knives are arranged cylindrically on the discs A. This is best shown in fig. 1, sheet 2. The knives consist each of a series of steel blades of a zigzag form, in edge view; these blades are bolted at one end to a segment piece, *a*, which by a series of bolts is fixed over a segment-shaped rebated opening made in the disc-plate A to receive it.

The blades *a* are also secured at their opposite ends to a segment piece, a^2, which is made fast by bolts and nuts to the plate A. These blades are ground up to a rectangular cutting edge, as shown at fig. 4, and an opening is left behind them, between the segment pieces a^1 and *a*, for the free passage of the cut canes.

By reference to the plan of the knives, fig. 3, it will be seen that the several blades of the series differ somewhat from each other, in that the vertical portion of the cutting edge increases in length from the first to the last of the series of blades. By this means the strain of the cutting action is equalized throughout the length of the knife.

As the canes are discharged into either side of the hopper, they will fall by their own weight endwise to the bottom thereof, and rest against the rotating disc A. As the knives on these discs come severally into contact with the canes, the latter will be sliced up, and the slices falling through the discs will drop into the tank beneath.

Referring now to sheet 1 of the drawings, it will be seen that the cutting apparatus is mounted above the last of a series of seven diffusion tanks, which are divided from each other by cross walls, but which, for the purpose of allowing the liquor to flow from one tank to the other, are provided with overflow channels in the side walls.

The cut cane, as it passes through the discs A slides down an incline, *b*, situate immediately below the shaft B, and falls into the tank 7, or passes through first rollers, and from thence into the tank 7. Here it meets with an immerser, G, which consists of a roller, mounted transversely, of the tank, and provided with paddle-boards, which, as the roller is rotated, pushes down the cut cane under the liquor contained in the tank. At the other end of the tank is mounted an elevator, H 7, composed of an endless web of lattice-work. This elevator is intended to carry up the cut cane out of the tank 7 and deposit it in the tank 6, and assist

to assist this operation a rake, I', is provided. This rake is connected by a crank-pin, *i*, with the disc *i* mounted in a standard, i^2, on the central wall of the double line of tanks.

Rotary motion is given to this disc by means of bevelled pinions, which are driven by the longitudinal shaft K. Jointed to the upper end of the rack is a radius rod, i^3, which is pivoted to a fixed arm, i^4, carried by the standard of the next adjacent rake, I^6.

It will now be understood that, as the crank-pin of the disc i^4 is rotated, the rake will be caused to gather up the sliced cane floating in the tank and push it into the elevator H^7. A similar result obtains in all the other tanks, they being each provided with two rakes and an elevator for passing forward the cut cane from one tank to the other, and ultimately delivering it out of the apparatus.

The tank 1, in addition to being provided with an elevator, H^1, is also fitted with an endless band, *h*, for receiving the cane-cuttings from that elevator and delivering the same to a pair of squeezing rollers, h^1, mounted upon and transversely of the tank. The cane-cuttings, in passing between these rollers, are deprived of the liquor which they contain, and they are then delivered on to an elevator, H, which delivers them from the apparatus.

I have said that the water of a suitable temperature, supplied to the tank 1, for washing out the saccharine juices from the cane-cuttings, runs through the whole series of tanks. This water is supplied to the tank 1 by a pipe, L, and it flows through a vertical channel, L, in the side wall to a horizontal channel formed in the top of the wall and communicating with the tank 2. In the same way the water, after accumulating in the tank 2, finds its way through a similar channel, L^2, into the tank 3, and the tanks being all similarly connected together, the liquor, gradually increasing in strength, will pass from tank to tank through the channels L^3 L^4, and until it reaches the last tank, 7.

Each of these channels, L^1, L^2, L^3, &c., is fitted at its lower end with a discharge pipe, to allow of the liquor of the several tanks being drawn off as desired.

Overhead shafting is provided, as at M M M, for driving the tank elevators and the squeezing rollers, and this shafting is actuated from the first motion shaft, M^1. Rotary motion is also communicated from this shaft by a band and pulleys to a short shaft, M^2, which, through bevelled gearing, gives motion to the longitudinal shaft K before referred to.

It will now be understood that the flow of the water and the traverse of the cane-cuttings will be in opposite directions, the one starting from one end and the other from the opposite end of the series of tanks, consequently the liquor in tank No. 1 will be the weakest in saccharine properties, and that in tank 7 will contain the strongest saccharine solution.

I would remark that a greater or a lesser number of tanks, and also, if necessary, rollers to each tank, which rollers may be fluted and may be used to form the series if thought desirable, the test being that the cane-cuttings shall be thoroughly exhausted before being discharged from the apparatus.

The liquor obtained from the last of the series of tanks is ready to undergo the clarifying process already referred to and next to be described.

This process is based on the existence of a new substance (the sucrate of hydrocarbonate of lime) applied to the purification of the juice of the sugar-cane.

The reaction of the sucrate of hydrocarbonate of lime in the cane-juice to be clarified admits of eliminating therefrom a great quantity of matters which are an obstacle to the crystallization of the sugar. The sucrate of hydrocarbonate of lime communicates to the juice properties which are of great value for their ultimate treatment. Thus the acidity of the cane-juice is neutralized, and is replaced by a slight alcalinity so essential to the preservation of all sweet matter.

The sugar which cannot be crystallized is destroyed at the temperature of boiling point, as well as every germ of fermentation. The saccharine liquors, purified by the action of the sucrate of hydrocarbonate of lime, are better coloured and very limped; they boil easily without losing their colour; they are devoid of any germ of fermentation, which is the cause of considerable losses with which the proprietors of sugar-cane works are unfortunately but too well acquainted; they furnish abundant crystals; the sugar obtained is white, very pure—devoid, like the syrups from which they were derived, of all germs of fermentation and of sugar which cannot be crystallized; they can be kept in stores as easily as the sugar extracted from beetroot by the most improved processes.

One special advantage of the process of purification by the sugared preparation of hydrocarbonate of lime is that the juice, directly on leaving the cane, is put in preserve of a substance of a pre-eminently antiseptic nature, and the juice can then remain in abeyance for an indefinite period without danger of the sugar it contains deteriorating or fermenting. Thus, in case any stoppage in the works should take place, the juice can be kept without detriment one or more days, or even months if necessary.

The process of purification of the cane-juice by means of the sucrate of hydrocarbonate of lime may be divided under the following heads:—

First—Preparation of the lime and the carbonic acid.
Second—Preparation of the lime milk.
Third—Liming the juices.
Fourth—Formation of the saccharine preparation of lime.
Fifth—Boiling the juice charged with the saccharine preparation of hydrocarbonate of lime.
Sixth—Filtration of the juice which has been boiled with the sucrate or saccharine preparation of hydrocarbonate of lime.
Seventh—Saturation, and afterwards ebullition; and lastly, decanting of the filtered juice, preparation of the lime and the carbonic acid.

Lime and carbonic acid are necessary for the formation of the saccharine preparation of hydrocarbonate of lime.

These two substances are simultaneously obtained by heating to a high temperature, in a lime-kiln, the different calcareous substances which are met with in nature. The lime, when taken from the kiln, is allowed to cool before being used.

The gases generated in the kiln are washed before making use of the carbonic acid gas they contain.

Preparation

Improvements in manufacturing Sugar.

Preparation of the lime milk.

There should be charged into a tank of iron or masonry some quick-lime taken from the kiln, the amount being determined by the quantity and the quality of the juice intended to be purified.

This quick-lime is to be slacked with a minimum amount of water, and when it has acquired the consistency of a thick paste it should be diluted with an equal volume of cane-juice, whereby a milk lime will be produced.

This milk lime, before being used, is to be strained, for which purpose it may be passed through fine wire gauze.

The milk of lime is then to be run into tanks, wherein the sugared calcareous solution is prepared—that is to say, where the liming of the juice is effected.

Liming of the juice.

This operation is effected by mixing the lime milk with the juice extracted from the cane. The mixture should not be made in an arbitrary manner; the relative quantities must depend on the quality of the juice extracted from the cane and of the lime employed.

The proportion of lime may vary from 1 to 3 per cent. of the weight of the cane-juice.

From this mixture the saccharine preparation of hydrocarbonate of lime is made.

Formation of the sucrate or saccharine preparation of hydrocarbonate of lime.

To form this preparation, the limed juice is run into boilers containing an agitator composed of a hollow central shaft fitted with four hollow horizontal arms pierced with holes on their under sides.

The gas from the lime-kiln is forced by a pump down the central shaft and caused to discharge through the pierced arms (while the agitator is being rotated), and, circulating in the vessel, the gas will mix with the juice. The froth produced in the first instance augments progressively, but to prevent it exceeding a certain height in the boiler the shaft is provided with rake teeth, which will break it up. After a time the froth will diminish perceptibly.

This phenomenon is due to the precipitation of the sucrate or saccharine preparation of hydrocarbonate of lime; therefore at that moment the passage of the gas should be arrested, since the object of this operation is to form a saccharine preparation of hydrocarbonate of lime.

This substance is a combination of sugar, lime, and carbonic acid, and has a gelatinous appearance; it is scarcely soluble in saccharine liquids, and it is insoluble in limed water. It is easily decomposed at boiling point by the foreign matters contained in saccharine juices, and this for the reason that when mixed with the juice of the cane the juice is brought to the temperature mentioned below.

Boiling of the juice with the sucrate or saccharine preparation of hydrocarbonate of lime.

This is effected in a closed boiler, the valve of which requires to be loaded to about one-eighth of an atmosphere (not quite) 2 lbs. English on the square inch.

The juice is submitted to a temperature exceeding 100 degrees Centigrade, by which means any germ of fermentation contained in it is destroyed before it leaves the vat.

Filtration of the juice which has been boiled with the sucrate or saccharine preparation of hydrocarbonate of lime.

The juice, after being boiled, is carried from the boiler by a steam elevator into a series of filtering presses, in which the deposits remain whilst the juice flows off perfectly clear.

If the juice runs freely from the filtering presses and is coloured it must have been purified with an insufficient quantity of the sucrate, for in reality the juice should filter well and be but slightly coloured.

Saturation and then ebullition of the filtered juice.

The juice is now run into a boiler containing a steam-worm and a gas-discharging agitator, where it is submitted to the influence of the carbonic acid until all the lime that it holds in solution is precipitated in the shape of carbonate.

The saturated juice, after boiling for some minutes, is run into a decanting vat.

By allowing the same to subside a clear juice is obtained, which is subsequently treated in the ordinary manner practised in sugar works.

The clear juice is consequently sent into the filters charged with animal charcoal in grain, and evaporated in the triple-acting apparatus.

As to the deposits of saturation which remain in the decanting vats, they are mixed with the sweet juices on their leaving the boiler, where they have been boiled and filtered like these saccharine juices, heated to boiling point.

Washing the deposits.

The deposits which remain in the filtering presses contain necessarily a little sweet juice which it may be advantageous to collect.

For this purpose the deposits are washed, and the washing water is utilized either for extracting the grease from the animal charcoal or for any other purpose.

Instead of making the saccharine preparation of hydrocarbonate of lime with the whole batch of cane-juice, this substance may be made with a portion only of the cane-juice, and the saccharine preparation thus formed may be afterwards mixed with the other portion of the cane-juice.

Thus

Thus the liming may be effected with lime milk from one-third or one-half of the cane-juice to be purified. Carbonic acid must be passed into this limed juice until the froth which forms in the first instance diminishes very perceptibly. Juice freshly extracted from the cane must be mixed with the limed and sugared juice as it has been above stated.

The mixture must be made very uniform, and it can then be submitted to the same operations as those described in which the saccharine preparation of lime was made, in the midst of the totality of the juice which it was intended to purify.

I would remark that the sucrate preparation is not only applicable to the treatment of the juices of the sugar-cane, but it may also be beneficially used in treating syrups and raw sugar, and it may also be applied to the extraction of sugar from molasses. The clarified cane-juice obtained by the process just described has next to be condensed to about 30 degrees Beaume. For this purpose I prefer to employ the apparatus for which I have obtained Letters Patent of Registration, but other condensing apparatus may be used if thought desirable.

When thus condensed the syrup is ready to be submitted to the charcoal filter. The construction of charcoal filter proposed to be employed is that which forms the last head of the invention, and is intended to provide for the constant renewing of the charcoal and the removal of the saturated material. The improved filter is illustrated by sheet IV of the drawings, wherein fig. 1 is a longitudinal vertical section of so much of the filter as will serve to explain the nature of my improvement. Fig. 2 is a sectional elevation taken at right angles to fig. 1, and fig. 3 is a partial sectional plan taken in the line 1, 2, of figures 1 and 2.

A A is a circular brick or concrete chamber of any desired depth, and tapering inwards at its lower end. In the centre of this chamber is mounted a rectangular case, B B, which rests upon brickwork near the bottom of the chamber, and is open at its upper and lower ends. Near its lower end, this case B is fitted internally with a pair of chain wheels, C, the axle of which turns in bearings fixed to the casing.

On the top of the chamber A is mounted a framing of cast-iron, D, which carries the bearings for a horizontal shaft, E.

This shaft forms the axle for a second pair of chain wheels, C^1 C^1, set immediately above the chain wheels C.

The wheels C C^1 are intended to carry an endless chain of buckets, F, which pass down to the bottom of the chamber A and rise up above it, for the purpose to be presently explained.

The space immediately between the walls of the chamber A and the casing B is intended to be filled with animal charcoal (reduced to coarse grains) up to or near about the level of the discharge pipe G. At about this height a set of levelling arms, H, is provided for distributing the charcoal evenly over the charcoal or filter-bed as it is delivered into the chamber A.

These arms are carried by an annular cog-wheel, H^1, which surrounds the casing B, and is supported by vertical and horizontal anti-friction rollers mounted in brackets, B^1, secured to the sides of the casing B.

Rotary motion is given to the wheel H^1 by means of a spur pinion on the vertical shaft I, which is supported in a footstep, I^1, and in a bearing of the casting D, and which receives motion through bevelled gear from the driving shaft E.

K is a pipe for admitting the syrup to the filter. This pipe may extend to near the bottom of the filter, as shown in the drawing, and discharge the syrup on to that portion of the charcoal which is nearest being spent. From this point the syrup will rise through the charcoal bed, leaving behind its chief impurities, and when it reaches the upper surface of the charcoal it will escape by the pipe G, whence it may be run into crystallizing pans and caused to deposit its crystals in the ordinary manner.

As the charcoal is fed into the chamber A its tendency will be to find its way down below the casing B, and as the filtration of the syrup is upwards, as indicated by the arrows, the charcoal at the bottom of the chamber will remove the grosser impurities, and the syrup, as it becomes fined, will meet with charcoal in a cleaner or less saturated state. Thus the charcoal at the bottom of the chamber will be comparatively inert; and it is for the purpose of removing the filtering material when inert that the apparatus just described is designed. By giving a slow rotary motion (continuous or otherwise) to the endless chain of buckets, the spent charcoal is carried up through the casing B, and discharged down the pipe or gutter L; at the same time the charcoal in the filter will, by its own gravity, move downwards to supply the place of the exhausted charcoal, which, as it leaves the gutter L, will fall into any suitable receptacle, ready to be removed and submitted to the well-known revivifying process. To prevent the charcoal or any portion of it as it is discharged from the buckets falling back into the filter, I have provided the pipe or gutter L with a sliding shoot, L^1, which, following the motion of the buckets, will advance to the chains to receive the discharged charcoal from the several buckets as they come over the wheels C^1 and retire to allow the buckets to pass.

This shoot is operated by a pair of link rods, L^2, connected to a crank shaft, L^3, which is mounted in bearings at the top of the casting D.

The crank shaft is driven by gearing from the shaft E. It will now be understood that, on the supply of charcoal being kept up, the filter may be maintained in a fresh and efficient state for an indefinite period.

Having now set forth the nature of the invention of "Improvements in the Mode of and Apparatus for manufacturing Sugar," and explained the manner of carrying the same into effect, I wish it to be understood that I claim—

First—The combination of apparatus above described for extracting the juices of the sugar-cane, consisting of the slicing apparatus and the series of tanks communicating the one with the other, and fitted respectively with an immerser, or rake or rakes, an elevator or elevators, and squeezing rollers, all operating in combination in the manner and for the purpose above explained.

Secondly—With respect to the clarification of saccharine juices, I claim the manufacture and use of the sucrate or saccharine preparation of the hydrocarbonate of lime, whether for the treatment of saccharine juices, or of syrups, or of raw sugar. I also claim the use of this compound when applied to molasses for extracting the sugar therefrom.

Thirdly—I claim the means above described for maintaining the efficiency of the charcoal filter.

Improvements in manufacturing Sugar.

In witness whereof, I, the said Robert Tooth, have hereunto set my hand and seal, the seventh day of October, in the year of our Lord one thousand eight hundred and seventy-nine.

ROBERT TOOTH,
(By his Attorney, MAURICE LYONS).

Signed, sealed, and delivered by the said Robert Tooth, by his Attorney, Maurice Lyons, in the presence of—

P. KELLY,
Clerk to Messrs. Lyons, Creagh, & Williams, Solicitors, Sydney.

This is the specification, marked A, referred to in the annexed Letters of Registration granted to Robert Tooth, this seventeenth day of November, A.D. 1879.

AUGUSTUS LOFTUS.

REPORT.

Sir,

Sydney, 18 October, 1879.

The application of Mr. Robert Tooth for Letters of Registration for "Improvements in the Mode and Apparatus for manufacturing Sugar" having been referred to us, we have examined the specification and drawings accompanying the same, and have now the honor to report that we see no objection to the issue of Letters of Registration as prayed for.

We have, &c.,
J. SMITH.
CHAS. WATT.

The Principal Under Secretary.

[Drawings—four sheets.]

B.

782.

Sheet 1.

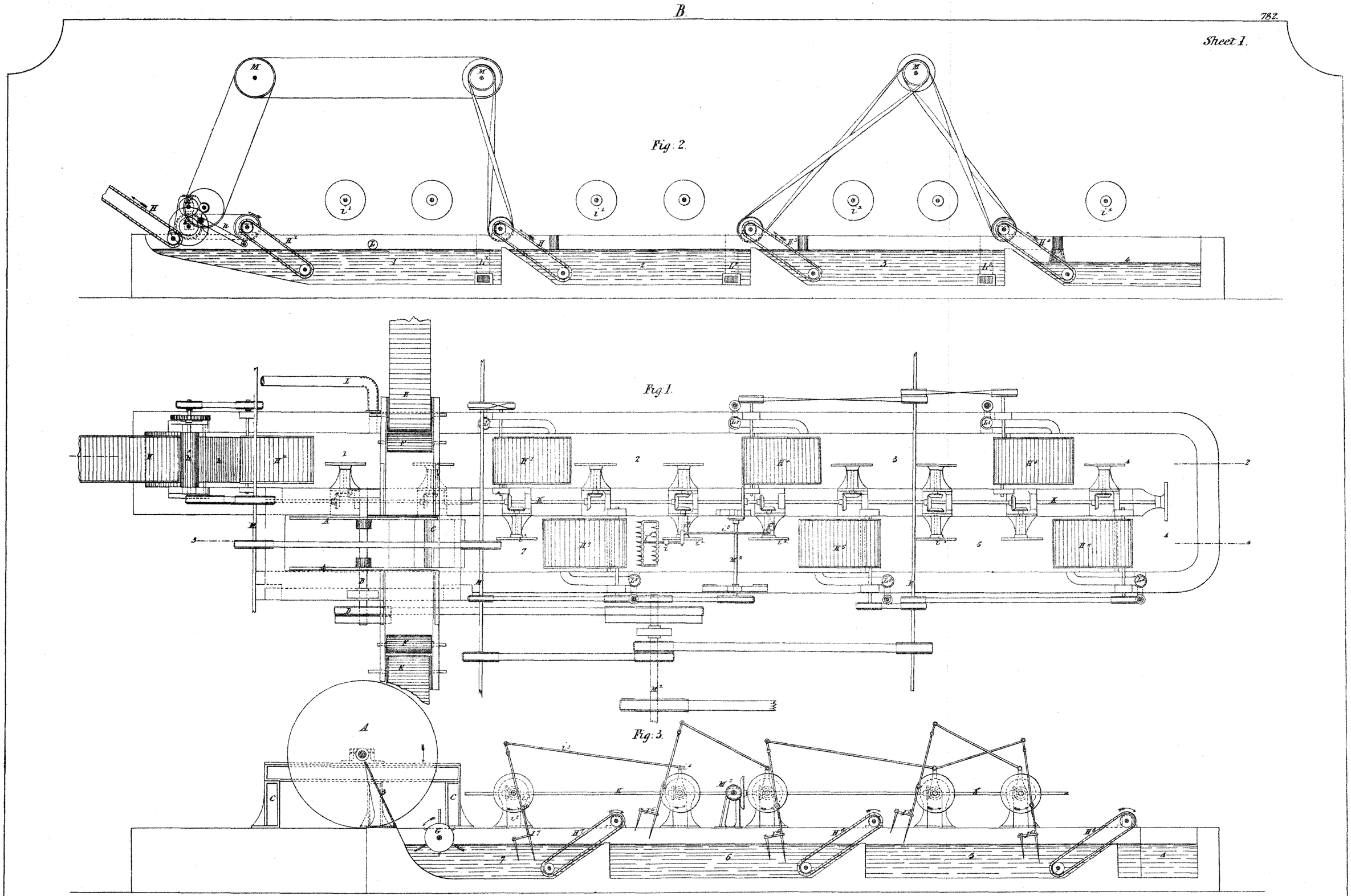

This is the Sheet of Drawings marked B referred to in the annexed Letters of Registration granted to Robert Tooth, this seventeenth day of November A.D. 1879

Augustus Loftus

Robert Tooth
by his Attorney
[illegible]

Witness J. McCelly Clerk Comm. Sts. Cough & William Lloyd Sydney

Sig: 198.

PHOTO-LITHOGRAPHED AT THE GOVT. PRINTING OFFICE, SYDNEY, NEW SOUTH WALES.

C.

782.

Sheet II

Fig: 1.

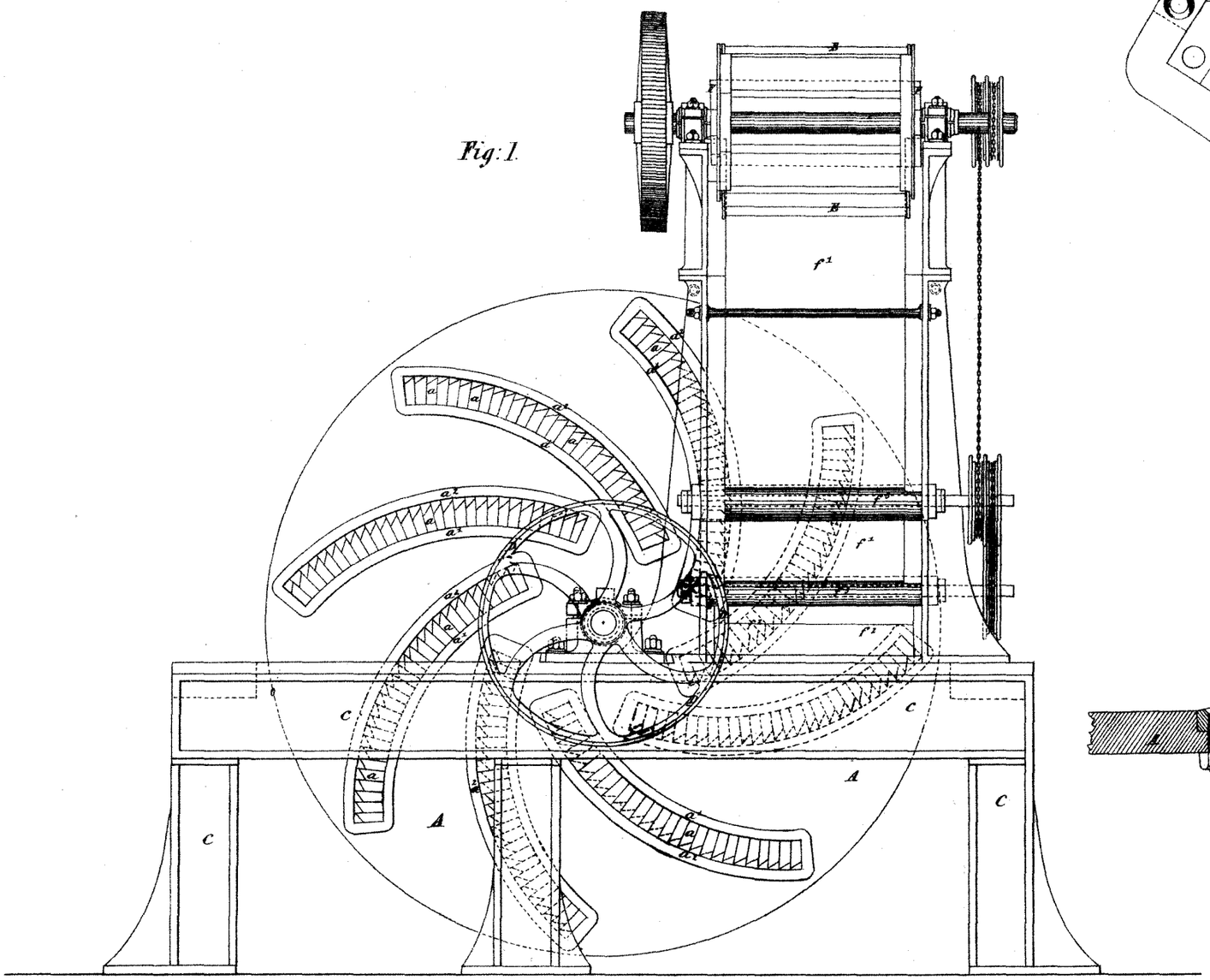

Fig: 3.

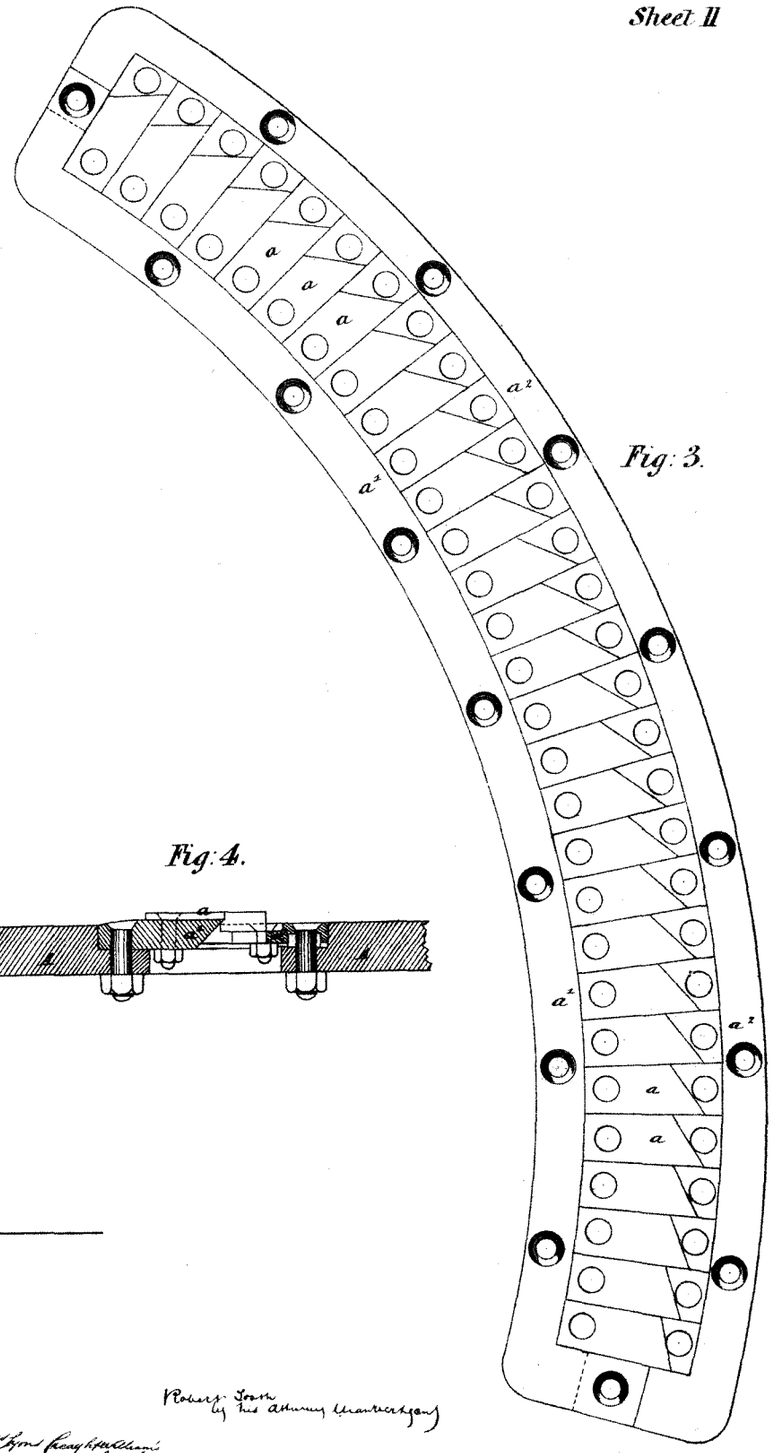

Fig: 4.

This is the Sheet of Drawings marked C. referred to in the annexed Letters of Registration granted to Robert Tooth, this seventeenth day of November A.D. 1879.

Augustus Loftus.

Robert Tooth
by his Attorney Manuel Lyons

Witness J. Lelly Clerk to Messrs Lyons Cleary & Hutchison's Sole Sydney.

Sig: 198.

PHOTO-LITHOGRAPHED AT THE GOVT. PRINTING OFFICE, SYDNEY, NEW SOUTH WALES

D

782.

Sheet III

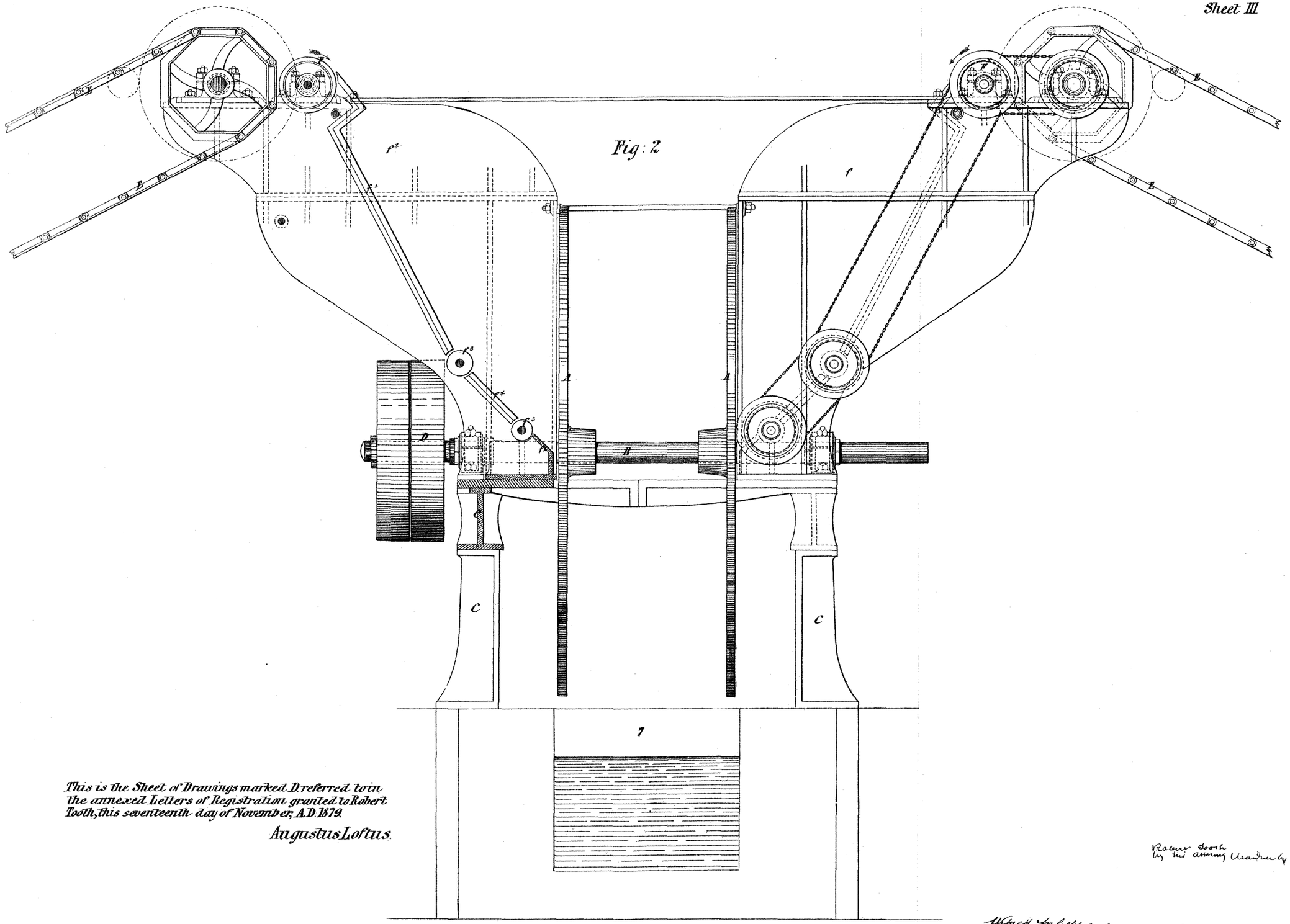

This is the Sheet of Drawings marked D. referred to in the annexed Letters of Registration granted to Robert Tooth, this seventeenth day of November, A.D. 1879.

Augustus Loftus.

Robert Tooth
by his Attorney Alexander Lyons

Witness Jn Lelly Clerk to Messrs Lyons Creagh & Williams
Sydney

PHOTO-LITHOGRAPHED AT THE GOVT. PRINTING OFFICE, SYDNEY, NEW SOUTH WALES.

E.

782.

Sheet IV.

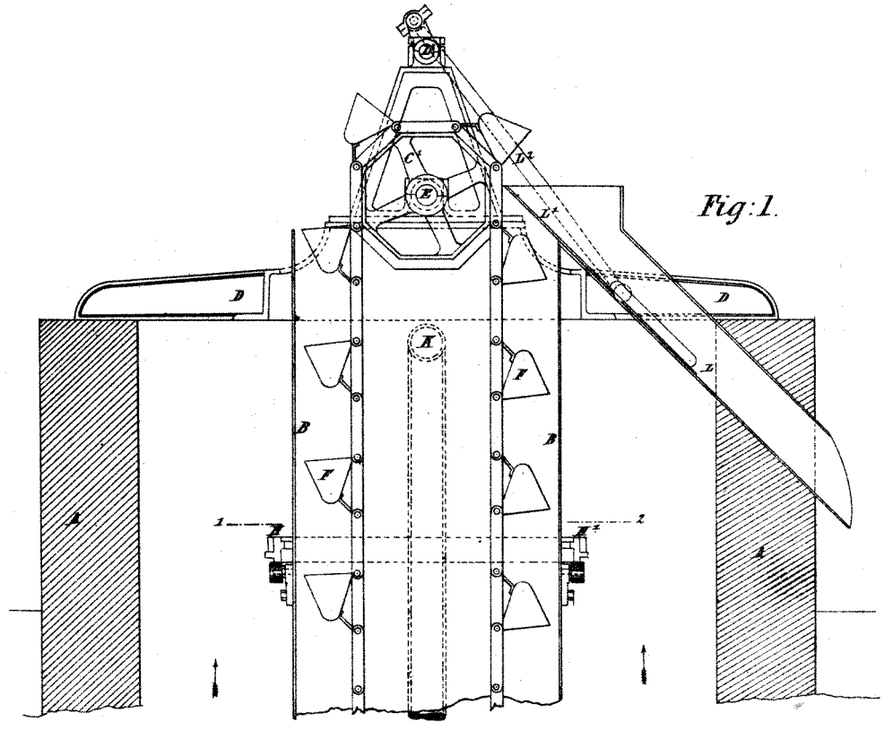

Fig: 1.

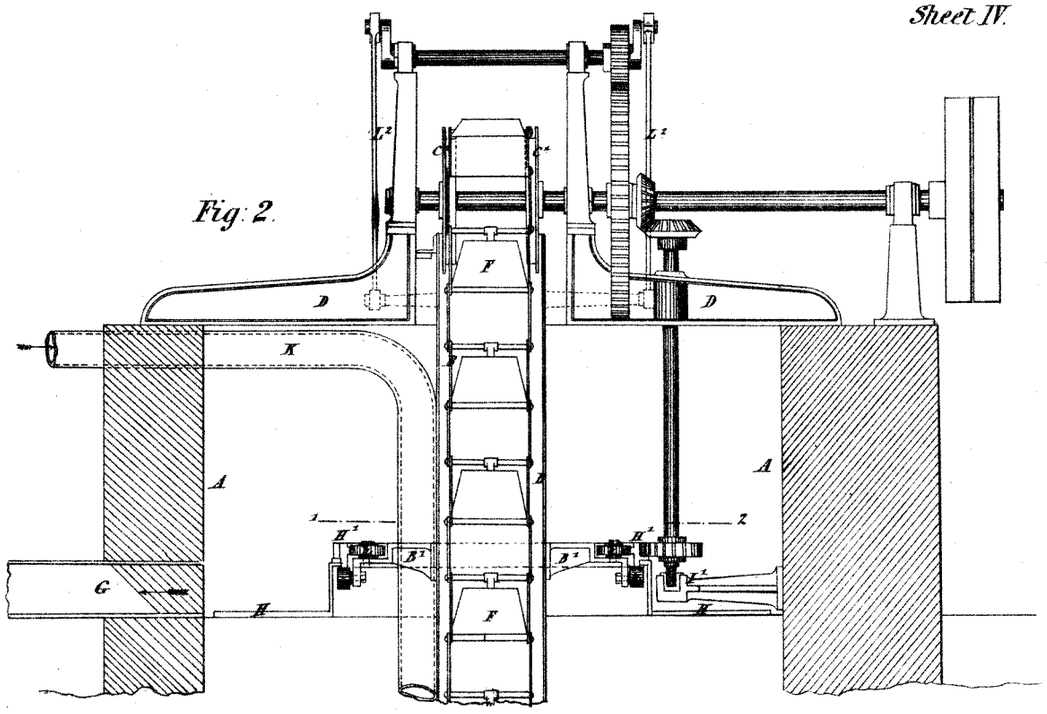

Fig: 2.

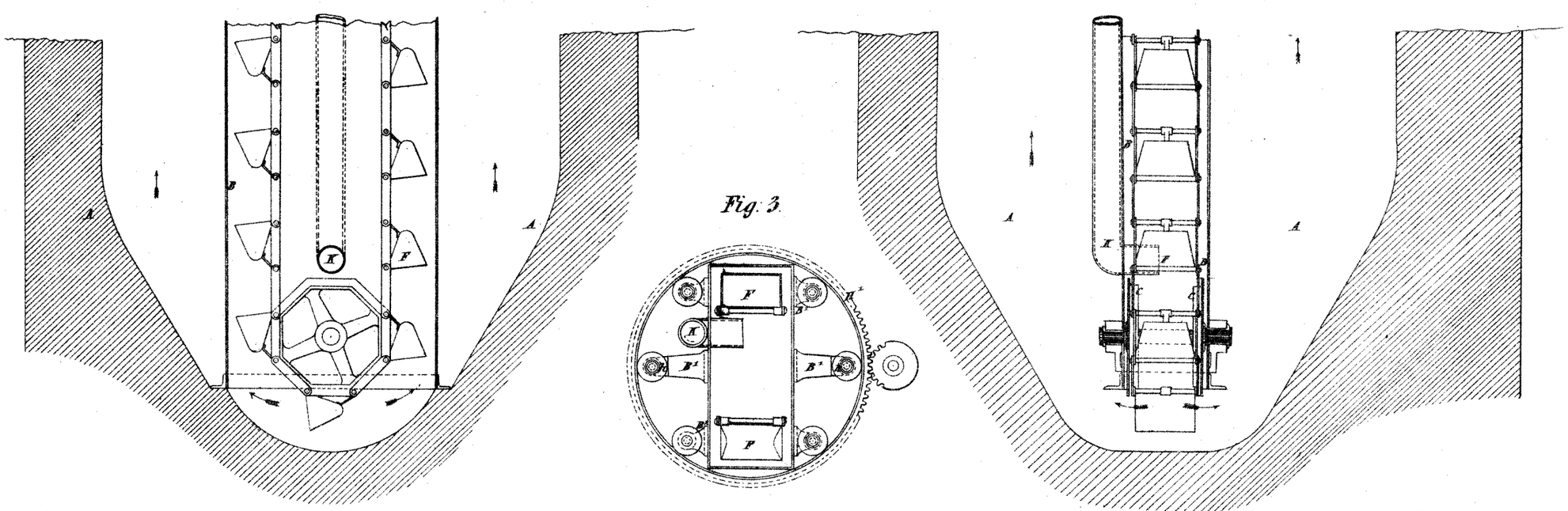

Fig: 3.

This is the Sheet of Drawings marked E. referred to in the annexed Letters of Registration granted to Robert Tooth, this seventeenth day of November, A.D. 1879.

Augustus Loftus.

Witness J. Kelly
Clerk to Mess. Lyons Creagh & Williams
Sol. Sydney

Robert Tooth
by his Attorney Mendelssohn

Sig. 198.

PHOTO-LITHOGRAPHED AT THE GOVT. PRINTING OFFICE, SYDNEY, NEW SOUTH WALES.

A.D. 1879, *25th November.* No. 783.

IMPROVED CONTRIVANCE TO BE USED IN WASHING CLOTHES.

LETTERS OF REGISTRATION to William Humble and Ward Nicholson, for an improved contrivance to be used in washing clothes.

[Registered on the 25th day of November, 1879, in pursuance of the Act 16 Vic. No. 24.]

BY His Excellency the Right Honorable Sir Augustus William Frederick Spencer Loftus (commonly called Lord Augustus Loftus), Knight Grand Cross of the Most Honorable Order of the Bath, a Member of Her Majesty's Most Honorable Privy Council, Governor and Commander-in-Chief of the Colony of New South Wales and its Dependencies.

TO ALL TO WHOM THESE PRESENTS SHALL COME, greeting:

WHEREAS William Humble and Ward Nicholson, both of the Vulcan Foundry, Little Malop-street, Geelong, in the Colony of Victoria, ironfounders, have by their Petition humbly represented to me that they are the authors or designers of a certain invention or improvement in manufactures, that is to say, of an invention intituled "An improved contrivance to be used in washing clothes," which is more particularly described in the specification and the sheet of drawings which are hereunto annexed; and that they, the said Petitioners, have deposited with the Honorable the Treasurer of the said Colony of New South Wales the sum of Twenty Pounds sterling, for defraying the expense of granting these Letters of Registration, as required by the Act of Council, sixteenth Victoria, number twenty-four; and have humbly prayed that I would be pleased to grant Letters of Registration, whereby the exclusive enjoyment and advantage of the said invention or improvement might be secured to them for a period of fourteen years: And I, being willing to give encouragement to all inventions and improvements in the arts or manufactures which may be for the public good, and having received a report favourable to the prayer of the said Petition, from competent persons appointed by me to examine and consider the matters stated therein and to report thereon for my information, am pleased, with the advice of the Executive Council, and in exercise of the power and authority given to me by the said Act of Council, to grant, and do by these Letters of Registration grant unto the said William Humble and Ward Nicholson, their executors, administrators, and assigns, the exclusive enjoyment and advantage of the said invention or improvement, for and during the term of fourteen years from the date hereof; to have, hold, and exercise unto the said William Humble and Ward Nicholson, their executors, administrators, and assigns, the exclusive enjoyment and advantage thereof, for and during and unto the full end and term of fourteen years from the date of these presents next and immediately ensuing, and fully to be complete and ended: Provided always, that if the said William Humble and Ward Nicholson shall not, within three days after the granting of these Letters of Registration, register the same in the proper office in the Supreme Court, at Sydney, in the said Colony of New South Wales, then these Letters of Registration, and all advantages whatsoever hereby granted, shall cease and become void.

In witness whereof, I have hereunto set my sign manual, and have caused the present Letters of Registration to be sealed with the seal of the said Colony of New South Wales, at Government House, Sydney, in New South Wales, this twenty-fifth day of November, in the year of our Lord one thousand eight hundred and seventy-nine.

[L.S.] AUGUSTUS LOFTUS.

SPECIFICATION

A.D. 1879. No. 783.

Improved contrivance to be used in washing clothes.

SPECIFICATION of WILLIAM HUMBLE and WARD NICHOLSON, both of the Vulcan Foundry, Little Malop-street, Geelong, in the Colony of Victoria, ironfounders, for an invention intituled "An improved contrivance to be used in washing clothes."

THIS invention consists of an improved contrivance to be used in domestic or other boilers for the washing of clothes, and is intended to promote the circulation of the water or suds, by drawing it through the clothes to the bottom, then heating it and sending it up through a pipe or pipes to be discharged at the top.

The simplest form of our contrivance is shown in figures 1 and 2 of our drawings, the former showing bottom view, and the latter showing half side view and half section of our apparatus. A is a cap which fits on to the bottom of the boiler. A^1 are perforations therein; A^2 is a volute chamber leading to central exit A^3, on which is fitted telescopically a pipe, B, of sufficient length, as hereinafter described. This cap must be so made as to fit tolerably close on the bottom of the boiler in which it is to be used, and the pipe B must be sufficiently long to reach the level of the top of such boiler. It should be placed in that part of the boiler which is immediately over the fire where the greatest heat would be felt. The boiler should then be filled with water to within (say) three inches of the mouth of the pipe B, a little soap added, and the fire lit. When the water boils, it will begin to flow rapidly from the spout B^1. The clothes to be washed, having been previously soaked and soaped, should then be put into the boiler and boiled in the ordinary way, a little water and soap being added with each fresh batch of clothes.

A modification (No. 1) of our invention is shown in figures 3 and 4, in which there are two volute chambers, A^2, having two series of perforations, A^1, each leading to its own half of vertical pipe B, each of which has its own spout, B^1.

Another modification (No. 2) of our invention is shown in figure 5, in which the volute chambers are substituted by concentric semi-circular chambers, C, each leading up to its own half of vertical pipe B, as in figure 4.

Another modification (No. 3) of our invention is shown in figures 6 and 7, in which the two volute chambers A^2 in figures 3 and 4, or the two concentric semi-circular chambers C in figure 5 are each led into separate pipes D D terminating in separate spouts, D^1, instead of being led into two halves of the same pipe.

Another modification (No. 4) of our invention is to make the single central pipe B terminate in a spout discharging all round, as shown in figures 8 and 9.

Figure 10 shows our apparatus in position in a boiler.

In the event of the boilers having a flat and not a dished bottom, the caps can of course be made quite flat, as it is necessary that they should fit closely on the bottom.

The whole apparatus can be made of any required size, and of any other material desired, but we prefer to make the caps of zinc and the pipes of copper.

Having thus described the nature of our invention and the manner of performing same, we would have it understood that—

What we claim as our invention is the improved contrivance to be used in washing clothes which is shown in figures 1 and 2 of our drawings, and the various modifications thereof as shown in figures 3 to 9 inclusive.

In witness whereof, we, the said William Humble and Ward Nicholson, have hereto set our hands and seals, this seventeenth day of October, one thousand eight hundred and seventy-nine.

WILLIAM HUMBLE.
WARD NICHOLSON.

This is the specification referred to in the annexed Letters of Registration granted to William Humble and Ward Nicholson, this twenty-fifth day of November, A.D. 1879.

AUGUSTUS LOFTUS.

REPORT.

Sir, Sydney, 23 October, 1879.

We do ourselves the honor to state that we see no objection to the issue of Letters of Registration, in accordance with the Petition, drawings, specification, and claim of Messrs William Humble and Ward Nicholson, for "An improved contrivance to be used in washing clothes," transmitted for our report under your blank cover communication of the 24th instant, No. 8,355.

We have, &c.,
GOTHER K. MANN.
ROBERT GEO. MASSIE.

The Principal Under Secretary.

[Drawings—one sheet.]

No. 784.

[Assignment of No. 598. See page 115 of Return of 3 March, 1881.]

HUMBLE & NICHOLSON'S PATENT.

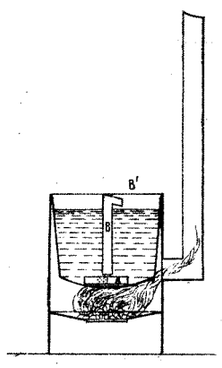

FIG. 10.

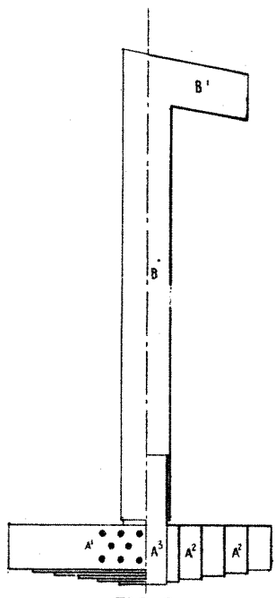

FIG. 2.

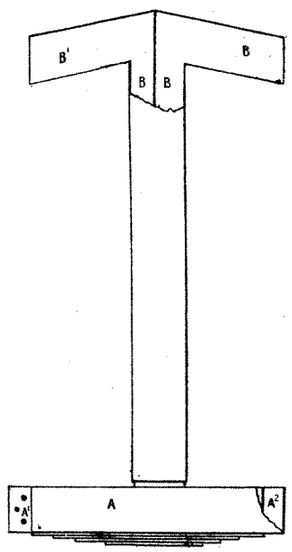

FIG. 4.

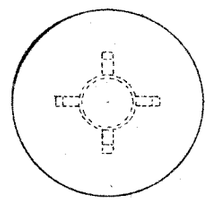

FIG. 9.

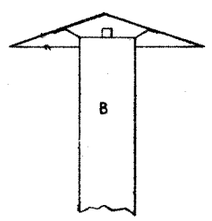

FIG. 8.

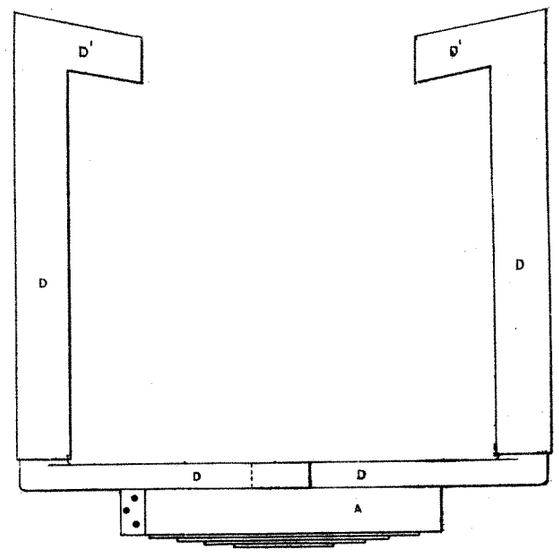

FIG. 7.

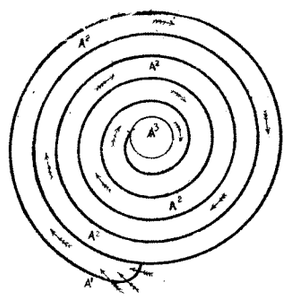

FIG. 1.

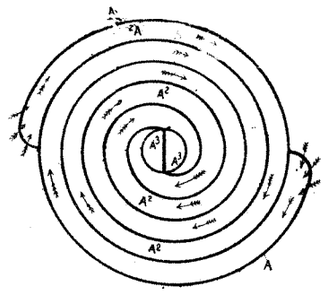

FIG. 3.

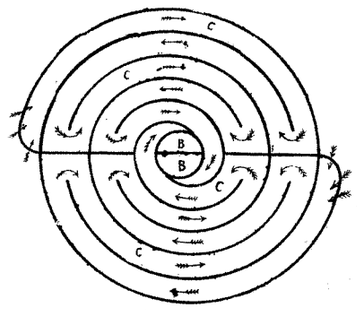

FIG. 5.

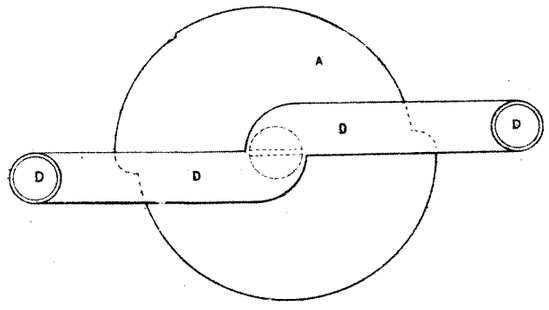

FIG. 6.

This is the sheet of Drawings referred to in the annexed Letters of Registration granted to William Humble and Wand Nicholson this twenty fifth — — day of November A.D. 1879.

(Sig. 788-) Augustus Loftus

PHOTO-LITHOGRAPHED AT THE GOVT. PRINTING OFFICE, SYDNEY, NEW SOUTH WALES.

A.D. 1879, 8*th December*. No. 785.

GRANT'S AERIAL STOPPER, BOTTLE, AND FILLING MACHINE.

LETTERS OF REGISTRATION to William James Grant and Frederick William Elliott, for an Improvement in Stoppering Aerated Water Bottles, and a Machine for filling the same.

[Registered on the 9th day of December, 1879, in pursuance of the Act 16 Vic. No. 24.]

BY His Excellency the Right Honorable Sir Augustus William Frederick Spencer Loftus (commonly called Lord Augustus Loftus), Knight Grand Cross of the Most Honorable Order of the Bath, a Member of Her Majesty's Most Honorable Privy Council, Governor and Commander-in-Chief of the Colony of New South Wales and its Dependencies.

TO ALL TO WHOM THESE PRESENTS SHALL COME, greeting:

WHEREAS William James Grant, of Brenhilda Terrace, Rennie-street, Paddington, near Sydney, in the Colony of New South Wales, cordial manufacturer, and Frederick William Elliott, of Sydney aforesaid, wholesale druggist, have by their Petition humbly represented to me that they are the authors or designers of a certain invention or improvement in manufactures, that is to say, of an invention of an "Improvement in Stoppering Aerated Water Bottles, and a Machine for filling the same," to be called "Grant's Aerial Stopper, Bottle, and Filling Machine," which is more particularly described in the amended specification, marked A, and the two sheets of drawings, marked B and C, respectively, which are hereunto annexed; and that they, the said Petitioners, have deposited with the Honorable the Treasurer of the said Colony of New South Wales the sum of Twenty Pounds sterling, for defraying the expense of granting these Letters of Registration, as required by the Act of Council, sixteenth Victoria, number twenty-four; and have humbly prayed that I would be pleased to grant Letters of Registration, whereby the exclusive enjoyment and advantage of the said invention or improvement might be secured to them for a period of fourteen years: And I, being willing to give encouragement to all inventions and improvements in the arts or manufactures which may be for the public good, and having received a report favourable to the prayer of the said Petition, from competent persons appointed by me to examine and consider the matters stated therein and to report thereon for my information, am pleased, with the advice of the Executive Council, and in exercise of the power and authority given to me by the said Act of Council, to grant, and do by these Letters of Registration grant unto the said William James Grant and Frederick William Elliott, their executors, administrators, and assigns, the exclusive enjoyment and advantage of the said invention or improvement, for and during the term of fourteen years from the date hereof; to have, hold, and exercise unto the said William James Grant and Frederick William Elliott, their executors, administrators, and assigns, the exclusive enjoyment and advantage thereof, for and during and unto the full end and term of fourteen years from the date of these presents next and immediately ensuing, and fully to be complete and ended: Provided always, that if the said William James Grant and Frederick William Elliott shall not, within three days after the granting of these Letters of Registration, register the same in the proper office in the Supreme Court at Sydney, in the said Colony of New South Wales, then these Letters of Registration, and all advantages whatsoever hereby granted, shall cease and become void.

In witness whereof, I have hereunto set my sign manual, and have caused the present Letters of Registration to be sealed with the seal of the said Colony of New South Wales, at Government House, Sydney, in New South Wales, this eighth day of December, in the year of our Lord one thousand eight hundred and seventy-nine.

[L.S.] AUGUSTUS LOFTUS.

Grant's Aerial Stopper, Bottle, and Filling Machine.

A.

SPECIFICATION of a Stoppered Bottle for the purpose of bottling aerated waters, to be called "Grant's Aerial Stopper, Bottle, and Filling Machine."

THIS invention consists of a bottle of any convenient shape, with a groove or flange near the orifice. In the bottle we place a stopper or ball made of any material that will float on the surface of the water; it can be made either hollow or solid, or of hard or flexible material, as may be found suitable. If a hard ball or stopper is used, we insert an india-rubber ring or pad in the groove or against the flange after having put the ball into the bottle, which ring projects sufficiently into the neck of the bottle to form a pad against which the stopper strikes and prevents the escape of the gas or water. If an elastic stopper is used, we use a glass flange only in the neck of the bottle without any ring.

In using this bottle and stopper the aerated water is forced into the bottle by an ordinary soda-water machine. As soon as the bottle is full the stopper or ball floats to the surface of the water. Some of the gas is then allowed to escape, when the ball immediately adjusts itself against the india-rubber pad if a hard ball is used, or against the glass flange if an elastic one is used, and acts as a stopper. To open the bottle, the stopper or ball is pressed into the bottle, and it at once floats to the other end, thereby not interfering with the pouring out of the liquid, an advantage which no other bottle now in use possesses.

This bottle can be used either with or without a filling machine. We append a drawing of a filling machine, which we also claim as our invention:—It consists of a framework, C, which is fitted with a treadle, *c*, to which is fixed a block, *i*, hollow on the top, to receive the bottom of the bottle *a* to be filled; an india-rubber pad, *e*, with an opening in the centre, is fixed in a box, *f*, against which the mouth of the bottle is pressed by the treadle. The opening in the pad communicates with a pipe, *b*, leading to the tap *k*, by which the aerated water is admitted through the pipe *d*; it also communicates with a vertical pipe, *g*, furnished with an air-tight tap, *h*, and also with the pipe *l*, to which may be fitted a syruping tap or apparatus if required.

The mode of working the machine is as follows:—The bottle is placed in the block *i* and pressed against the pad *e* by using the treadle *c*. The aerated water is then admitted by the tap *k*, and as soon as the bottle is filled and the ball floated to the surface of the water the tap *h* is opened, and the ball immediately flies into position and is there retained by the pressure of the gas.

The inventors claim as an improvement the stopper being made of material light enough to float on the surface of the water,—a great advantage in pouring out the liquid, the stopper never falling into the neck of the bottle as all others do.

The inventors especially claim as their own invention, and as a novel idea; the stopper being lifted out of the liquid by the force of the gas and carried by the same into its place while the bottle is in an upright position.

The only mode of adjusting the stoppers now in use is by the bottle being placed or turned neck downwards and the stopper falling into its place by its own weight and kept there by the strength of the gas contained in the bottle.

WM. J. GRANT.
F. W. ELLIOTT.

LETTERS OF REFERENCE.

Machine.

C is the frame; *c* is the treadle; *i* is a block on top of the treadle to hold bottom of the bottle; *e* is an india-rubber pad with opening in the centre; *f* is a round brass box; *b* is the pipe by which the aerated water enters into box *f* and thence into the bottle; *k* is a tap connected with pipe *b*; *d* is a pipe connecting the filling machine with the soda-water machine; *g* is a vertical pipe attached to the top of box *f*; *h* is a tap to close and open vertical pipe *g* from which the gas can be allowed to escape; *l* is the pipe with union, to which a syrup tap can be placed if required.

Bottle.

No. 1.—*a* is the ball or stopper; *b* is the india-rubber ring; *c* is the groove where india-rubber ring fits.

No. 2.—*a* is the ball floating on surface of water. *b* is the liquid coming out of mouth of bottle.

This is the specification, marked A, referred to in the annexed Letters of Registration granted to William James Grant and Frederick William Elliott, this eighth day of December, A.D. 1879.

AUGUSTUS LOFTUS.

REPORTS.

Sir, Sydney, 17 October, 1879.

We do ourselves the honor to report, in reply to your blank cover communication of the 7th instant, No. 7,740, that on examination of Messrs. William James Grant and Frederick William Elliott's specification, drawings, Petition, and claim for the registration of "Grant's Aerated Stopper Bottle and Filling Machine," we find that the only apparent novelty of the stopper is comprised in its being made of material light enough to float; that the second claim—the stopper being adjusted by the gas—is an existing right, and therefore inadmissible; that the filling machine approximates but is not identical with apparatus in use, and might be registered. We therefore do not recommend the prayer of Petitioners being granted in its present form.

We have, &c.,
GOTHER K. MANN.
ROBERT GEO. MASSIE.

The Principal Under Secretary.

Sir,

Grant's Aerial Stopper, Bottle, and Filling Machine.

Sir, Sydney, 7 November, 1879.

We do ourselves the honor to return the documents transmitted for our further report under your blank cover communication of the 1st instant, and to state that we are of opinion that Letters of Registration may now be granted in favour of Messrs. Grant and Elliott, for "Grant's Aerial Stopper, Bottle, and Filling Machine," in accordance with their revised specification and claim.

We have, &c.,

GOTHER K. MANN.
ROBERT GEO. MASSIE.

The Principal Under Secretary.

[Drawings—two sheets.]

Machine for filling Grant's Aerial Bottles.

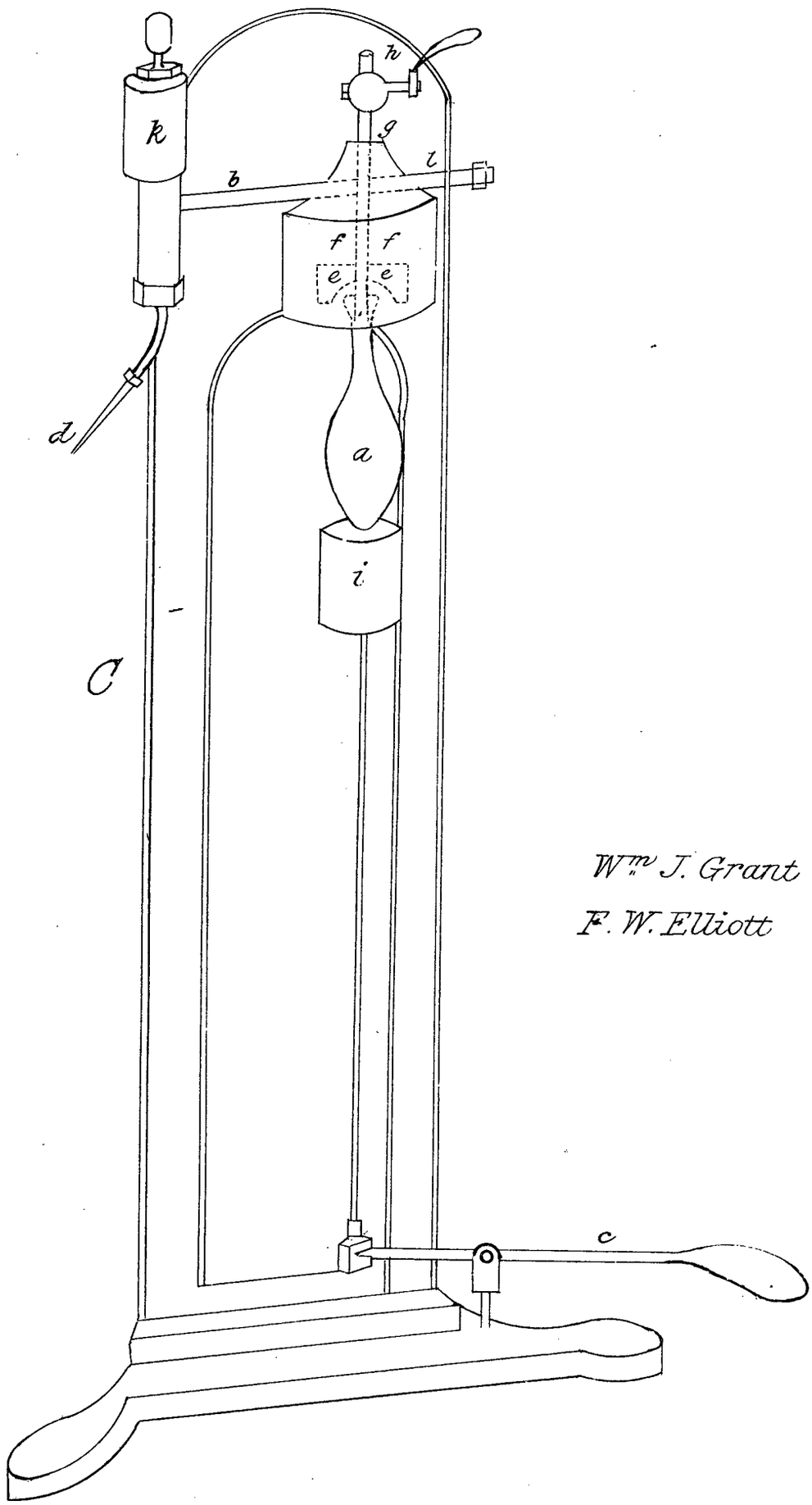

Wm J. Grant

F. W. Elliott

This is the Sheet of Drawings marked B referred to in the annexed Letters of Registration, granted to William James Grant, and Frederick William Elliott, this eighth day of December, A.D. 1879.

Augustus L. Oftus.

(Sig. 198-)

Grant's Aerial Stoppered Bottle

Fig. 1.

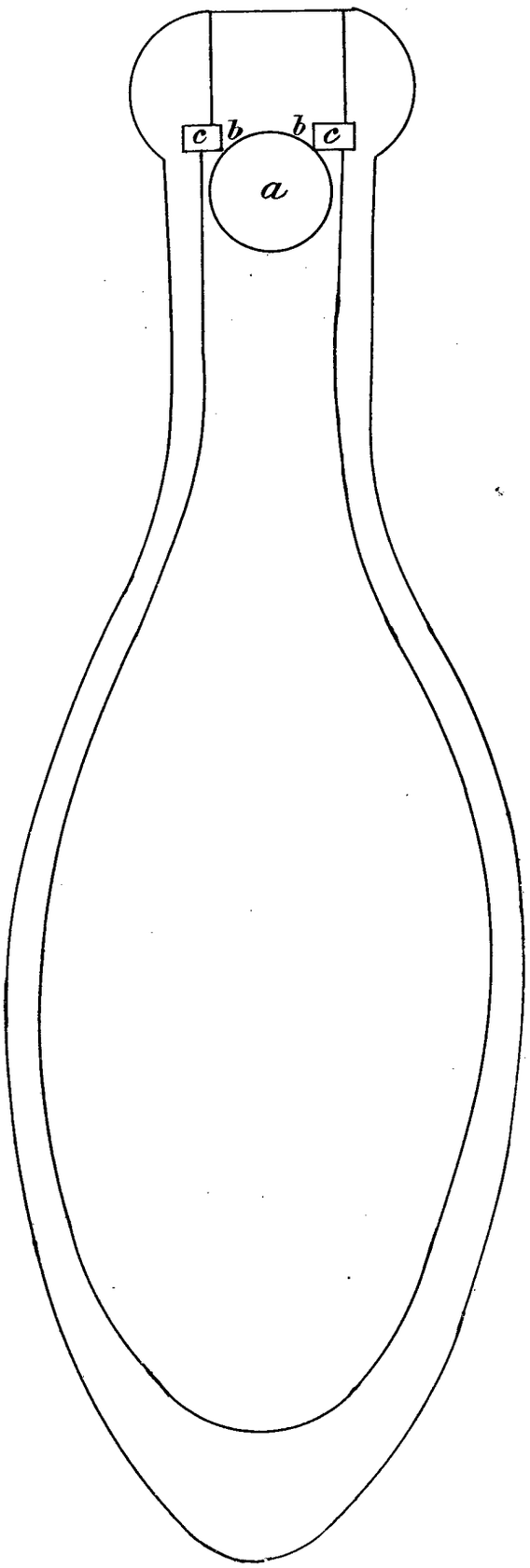

Wm. J. Grant

Fig. 2.

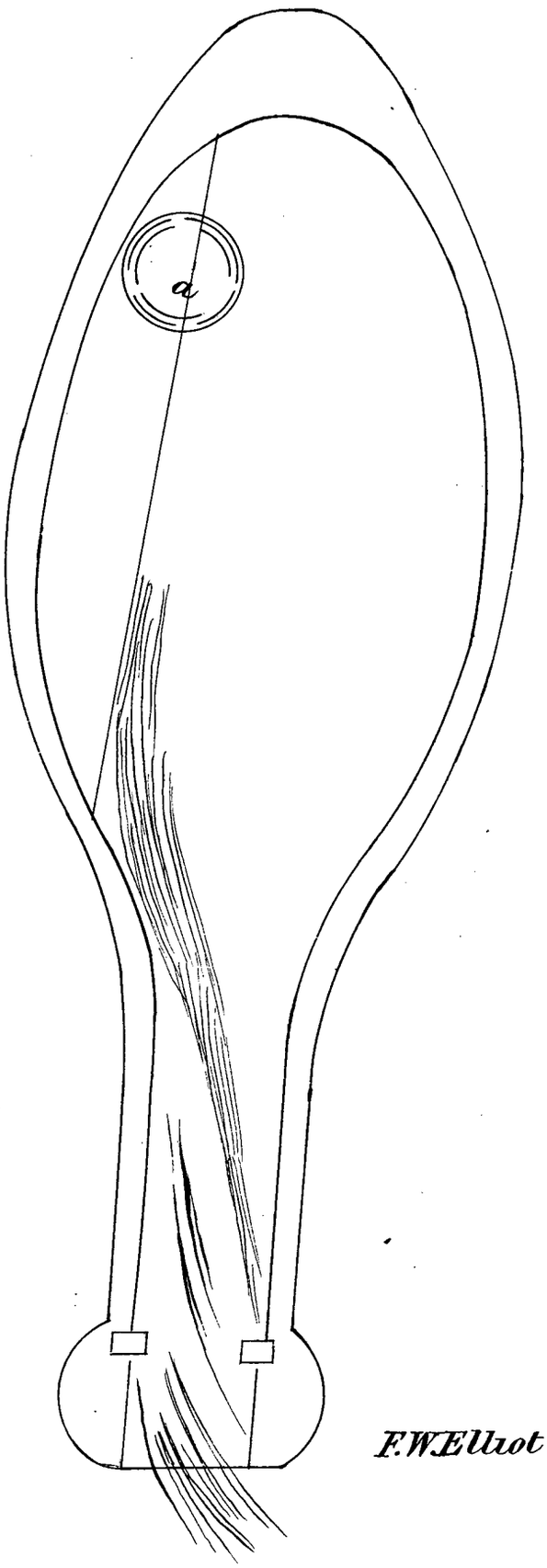

F.W.Elliot

This is the Sheet of Drawings marked C. referred to in the annexed Letters of Registration, granted to William James Grant, and Frederick William Elliott, this eighth day of December, A.D. 1879.

Augustus Loftus.

(Sig. 198-)

A.D. 1879, 11*th December*. No. 786.

IMPROVEMENTS IN AERATED WATER BOTTLES.

LETTERS OF REGISTRATION to Alfred Felton and Frederick Sheppard Grimwade, for Improvements in and relating to Aerated Water Bottles.

[Registered on the 13th day of December, 1879, in pursuance of the Act 16 Vic. No. 24.]

BY His Excellency the Right Honorable Sir Augustus William Frederick Spencer Loftus (commonly called Lord Augustus Loftus), Knight Grand Cross of the Most Honorable Order of the Bath, a Member of Her Majesty's Most Honorable Privy Council, Governor and Commander-in-Chief of the Colony of New South Wales and its Dependencies.

TO ALL TO WHOM THESE PRESENTS SHALL COME, greeting:

WHEREAS Alfred Felton and Frederick Sheppard Grimwade, both of Nos. 31 and 33, Flinders Lane West, in the city of Melbourne and Colony of Victoria, wholesale chemists, have by their Petition humbly represented to me that they are the assignees of William Boyd, who is the author or designer of a certain invention or improvement in manufactures, that is to say, of an invention entitled "Improvements in and relating to Aerated Water Bottles," which is more particularly described in the amended specification which is hereunto annexed, and the plans or drawings therein shown; and that they, the said Petitioners, have deposited with the Honorable the Treasurer of the said Colony of New South Wales the sum of Twenty Pounds sterling, for defraying the expense of granting these Letters of Registration, as required by the Act of Council, sixteenth Victoria, number twenty-four; and have humbly prayed that I would be pleased to grant Letters of Registration, whereby the exclusive enjoyment and advantage of the said invention or improvement might be secured to them for a period of fourteen years: And I, being willing to give encouragement to all inventions and improvements in the arts or manufactures which may be for the public good, and having received a report favourable to the prayer of the said Petition, from competent persons appointed by me to examine and consider the matters stated therein and to report thereon for my information, am pleased, with the advice of the Executive Council, and in exercise of the power and authority given to me by the said Act of Council, to grant, and do by these Letters of Registration grant unto the said Alfred Felton and Frederick Sheppard Grimwade, their executors, administrators, and assigns, the exclusive enjoyment and advantage of the said invention or improvement, for and during the term of fourteen years from the date hereof; to have, hold, and exercise unto the said Alfred Felton and Frederick Sheppard Grimwade, their executors, administrators, and assigns, the exclusive enjoyment and advantage thereof, for and during and unto the full end and term of fourteen years from the date of these presents next and immediately ensuing, and fully to be complete and ended: Provided always, that if the said Alfred Felton and Frederick Sheppard Grimwade shall not, within three days after the granting of these Letters of Registration, register the same in the proper office in the Supreme Court, at Sydney, in the said Colony of New South Wales, then these Letters of Registration, and all advantages whatsoever hereby granted, shall cease and become void.

In witness whereof, I have hereunto set my sign manual, and have caused the present Letters of Registration to be sealed with the seal of the said Colony of New South Wales, at Government House, Sydney, in New South Wales, this eleventh day of December, in the year of our Lord one thousand eight hundred and seventy-nine.

[L.S.] AUGUSTUS LOFTUS.

SPECIFICATION

Improvements in Aerated Water Bottles.

SPECIFICATION of ALFRED FELTON and FREDERICK SHEPPARD GRIMWADE, both of Nos. 31 and 33, Flinders Lane West, in the city of Melbourne and Colony of Victoria, wholesale chemists, for an invention entitled "Improvements in and relating to Aerated Water Bottles."

THIS invention consists of two parts, the first being an improvement in aerated water bottles, and the other being an improved metallic capsule used in the stoppering of such bottles.

The improvement in aerated water bottles consists in the projections marked *e* on the sketch hereon. These are placed at regular intervals in the shoulder, so as to catch the stopper when once forced into it, and prevent its return to the mouth until the bottle is nearly or quite perpendicularly upside down.

The improved metallic capsule is to resist the pressure of the stopper against the india-rubber ring, and is therefore much thicker than ordinary capsules, and by preference is cast of white metal, in the shape shown in the sketch hereon, where it is marked *c*. This capsule is made to sit on the rim of an aerated water bottle, so that its upper edge c^1 presses on an india-rubber ring, *b*, let into a recess in the mouth of the bottle, whilst its lower edge, c^2, is pressed under the projection *d*. The upper edge c^1 may either be flat as shown, or slightly turned down on to the rubber ring. Bottles thus stoppered can have their stoppers, washers, and capsules removed from one bottle to another with the greatest facility, whereas in most other cases this is either very difficult or wholly impracticable.

We would have it distinctly understood that we do not claim the india-rubber ring as our invention, but we claim only—

First—The manufacture of aerated water bottles with the projections *e* at regular intervals in the shoulder, substantially as herein described, and

Second—The capsule *c*, to be made and used in the manner and for the purpose substantially as herein described and explained.

ALFRED FELTON.
F. S. GRIMWADE.

This is the amended specification with the plans or drawings referred to in the annexed Letters of Registration granted to Alfred Felton and Frederick Sheppard Grimwade, this eleventh day of December, A.D. 1879.

AUGUSTUS LOFTUS.

REPORTS.

Sydney, 4 November, 1879.

Sir,

We do ourselves the honor to report, in reply to your blank cover communication of the 29th October, No. 8,563, transmitting Messrs. Alfred Felton and Frederick Sheppard Grimwade's Petition for Letters of Registration of "Improvements in the Stoppering of Aerated Water Bottles," that we are of opinion that the claim of the applicants cannot be complied with in its present form, the only apparent novelty shown by the specification and drawings being the internal projections marked *e* and the solid metal capsule marked *c*.

We have, &c.,
GOTHER K. MANN.
ROBERT GEO. MASSIE.

The Principal Under Secretary.

Sydney, 21 November, 1879.

Sir,

We do ourselves the honor to report, in reply to your further communication of the 17th instant, No. 9,082, that we see no objection to the issue of Letters of Registration in favour of Messrs. Alfred Felton and Frederick Sheppard Grimwade, in accordance with their Petition and revised specification, drawings, and claim.

We have, &c.,
GOTHER K. MANN.
ROBERT GEO. MASSIE.

The Principal Under Secretary.

[Drawings—one sheet.]

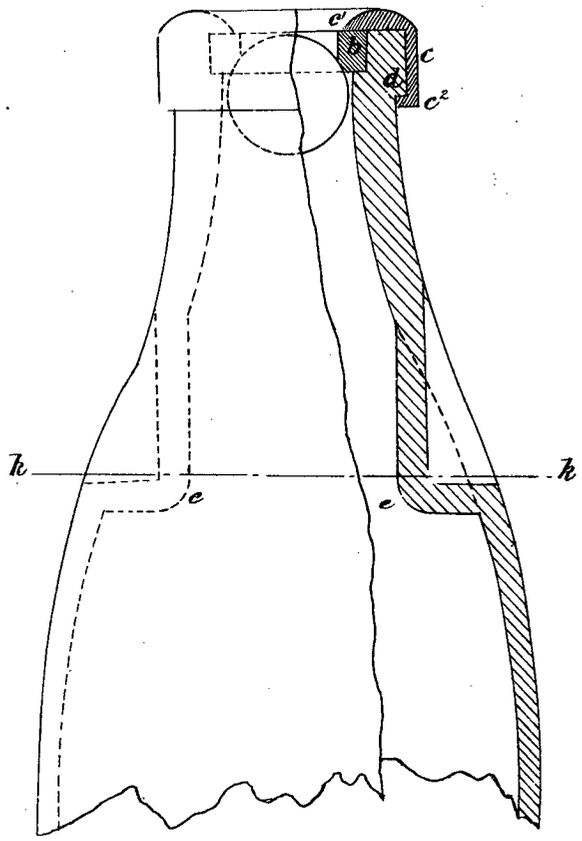

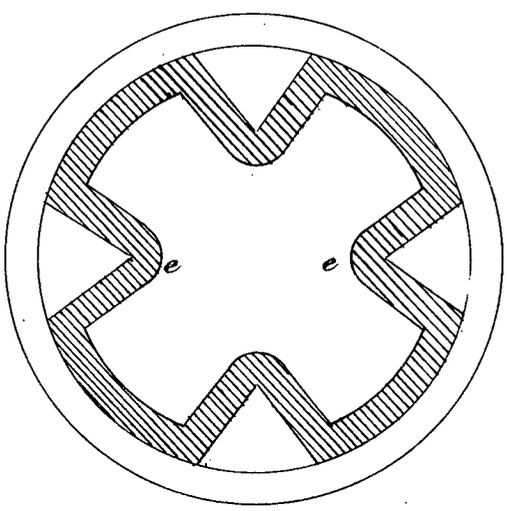

Section on line k.k.

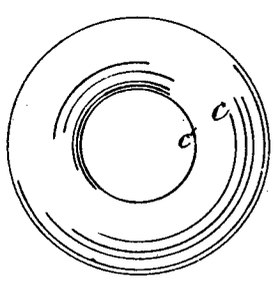

Plan

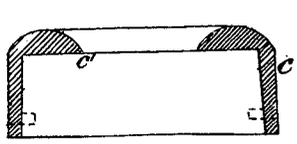

Section

A.D. 1879, 18*th December*. No. 787.

IMPROVEMENTS IN THE COMBUSTION OF FUEL.

LETTERS OF REGISTRATION to August Louis Schultz, for Improvements in the Method of and Apparatus for the Combustion of Fuel.

[Registered on the 19th day of December, 1879, in pursuance of the Act 16 Vic. No. 24.]

BY His Excellency the Right Honorable Sir Augustus William Frederick Spencer Loftus (commonly called Lord Augustus Loftus), Knight Grand Cross of the Most Honorable Order of the Bath, a Member of Her Majesty's Most Honorable Privy Council, Governor and Commander-in-Chief of the Colony of New South Wales and its Dependencies.

TO ALL TO WHOM THESE PRESENTS SHALL COME, greeting:

WHEREAS August Louis Schultz, of Meissen, Saxony, in the Empire of Germany, civil engineer, hath by his Petition, humbly represented to me that he is the author or designer of a certain invention or improvement in manufactures, that is to say, of an invention entitled "Improvements in the Method of and Apparatus for the combustion of Fuel," which is more particularly described in the specification, marked A, and the two sheets of drawings, marked B and C respectively, which are hereunto annexed; and that he, the said Petitioner, hath deposited with the Honorable the Treasurer of the said Colony of New South Wales the sum of Twenty Pounds sterling, for defraying the expense of granting these Letters of Registration, as required by the Act of Council, sixteenth Victoria, number twenty-four; and hath humbly prayed that I would be pleased to grant Letters of Registration, whereby the exclusive enjoyment and advantage of the said invention or improvement might be secured to him for a period of fourteen years: And I, being willing to give encouragement to all inventions and improvements in the arts or manufactures which may be for the public good, and having received a report favourable to the prayer of the said Petition, from competent persons appointed by me to examine and consider the matters stated therein and to report thereon for my information, am pleased, with the advice of the Executive Council, and in exercise of the power and authority given to me by the said Act of Council, to grant, and do by these Letters of Registration grant unto the said August Louis Schultz, his executors, administrators and assigns, the exclusive enjoyment and advantage of the said invention or improvement, for and during the term of fourteen years from the date hereof; to have, hold, and exercise unto the said August Louis Schultz, his executors, administrators, and assigns, the exclusive enjoyment and advantage thereof, for and during and unto the full end and term of fourteen years from the date of these presents next and immediately ensuing, and fully to be complete and ended: Provided always, that if the said August Louis Schultz shall not, within three days after the granting of these Letters of Registration, register the same in the proper office in the Supreme Court, at Sydney, in the said Colony of New South Wales, then these Letters of Registration, and all advantages whatsoever hereby granted, shall cease and become void.

In witness whereof, I have hereunto set my sign manual, and have caused the present Letters of Registration to be sealed with the seal of the said Colony of New South Wales, at Government House, Sydney, in New South Wales, this eighteenth day of December, in the year of our Lord one thousand eight hundred and seventy-nine.

[L.S.] AUGUSTUS LOFTUS.

Improvements in the Combustion of Fuel.

A.

SPECIFICATION of AUGUST LOUIS SCHULTZ, of Meissen, Saxony, in the Empire of Germany, civil engineer, for an invention entitled "Improvements in the Method of and Apparatus for the Combustion of Fuel."

THE object of this invention of improvements in the method of and apparatus for the combustion of fuel is—to introduce the fuel to be burned in such a way that it enters the grate or place where it is to be burned from underneath or sideways, and that it forms a heap or pile from the top of which the fuel is consumed.

Now, in order to carry out this method of introducing the fuel to the fire from below, I employ several constructions, the principle of which is represented in figs. I to IV of the annexed drawings.

Fig I is a longitudinal section. Fig. II is a transverse section of the grate. Fig. III is a plan. Fig. IV is a front elevation of the whole apparatus.

The construction consists in an introduction pipe, A, provided inside with a spiral scroll, A, a grate, B, and a slide, C, for the cinders or slag.

The apparatus may be driven by mechanical power, whereby a constant supply of fuel is obtained.

The pipe A projects from the wall of the furnace, and bears on its upper part the hopper D. Inside of the pipe A is a screw, *a*, the spindle of which is carried by a plummer block attached to the front plate *b*. On the outer part of the axis of the screw, a worm-wheel, C, is fixed, which is driven by a worm on the vertical spindle K. The inner side of the under part of the pipe A is the bottom plate *d* of the canal E. In case artificial blast is required, this bottom plate *d* is hollow and provided with a blast-pipe, F, and has, at its front, where it touches the inclined plane of the grate B, several small holes in the direction of this plane, by which the blast is introduced. This arrangement for artificial blast is, however, only necessary in case a very high temperature is required, as, for instance, in puddling or welding furnaces, or in other general metallurgical processes (fig. XIII.)

The pipe A leads into channel E, which, by preference, is of rectangular section.

The height of the channel E may be gradually reduced, but its width must increase towards the grate B.

At the point where E leads into the grate the width of E is the same as that part of the fireplace which is either formed by closely joining fire-bars, or by the plate *i*, which, as will be seen by the longitudinal section, fig. 1, is gradually elevating towards the end, and which part I call the channel.

The width of the channel in the grate is divided into three or several terraces, and on both sides such fire-bars are arranged, which, with all the other bars and the channel unite at the line O O. From this line to the rear the grate forms an incline. By means of the channel *i* the introduction of the fuel into the fire from underneath is effected. By the action of the screw which drives the fuel from the hopper to the grate a heap is formed on the grate, the surface of which is burning, and from the bottom of which the fresh coal is forced up its way to the top and all parts of the grate.

The slide C, for the clinkers or slag, is situated behind the grate B. The spiral scroll *a* is rotated to the right-hand side, and is covered up on this side for all the length of the hopper. That side of the hopper towards which the fuel is moved by the scroll, and which is *vis-à-vis* the face of the boiler, is not at right angle to the axis of the spiral scroll, but has the same inclination or pitch as the spiral scroll itself. Both constructions are necessary, to avoid the blocking up of the coal or fuel.

H H are stoke-holes, which are closed by common doors, and which are usually reduced in height towards the inside.

The stoker is enabled to introduce any stoke-iron or shovel to remove the cinders and to bring the latter upon the slide C, from which they may be withdrawn on turning the slide by means of the bar *l*. This construction may however be altered, as the case may require, both for different applications and different fuel. In some cases I lower the grate somewhat under the plate *d* of the canal E, for the more effectual introduction of the blast. In this case the grate B is of smaller dimensions, or may be dispensed with altogether.

Figs. V, VI, VI*a*, and VII show a modification of the grate just described, which is intended to spread the coal regularly all over the grate when the latter is long and narrow.

Fig. V is a front elevation. Fig. VI is a longitudinal section. Fig. VI*a* shows details of the modification. Fig. VII is a lateral section upon the line *a b*.

The modification consists in the application of a movable plate, F, which, by its reciprocal motion drives the coal to the rear of the grate. To effect these motions I commonly use the wheels C′, fixed on an axis, and moved by a screw or otherwise Each of the wheels is fitted with a crank stud, to which a connecting rod, C″, is attached, the other ends of the rods being connected to pivots, *i*′, of the plate F. This plate is carried by the racks *n*, by means of the four cog-wheels *m*. As soon as the wheels C′ are rotated, the plate F will be caused to move reciprocally, and cause the coal lying on it to advance, so that all the surface of the grate is soon covered therewith. Over the plate F there is another plate, F′, in order to fill up the open space which would be formed by the motions of the plate F.

The other arrangement or construction is similar to that described above with reference to figs. I to IV.

Figs. VIII and IX show a construction in which the spiral scroll is replaced by a slide or plunger.

Fig. VIII is a front elevation. Fig. IX is a longitudinal section.

This arrangement is intended for grates of a width too great to be supplied by a single scroll or screw, and when it would not be convenient to use a series of scrolls.

Such slide or plunger may either be arranged as represented in the drawing, or may occupy all the breadth of the grate. In this case the openings used for observing the fire are above the hopper. The slide or plunger may either consist, as illustrated, of a box, *a*, in which a plate, *g*, is movable on its fulcrum, *y*, or of a piston which moves reciprocally. The motion of these plates or plungers is effected either through connecting rods, C″, by means of pivot-wheels, C′, or by means of eccentrics, cranks, levers, or otherwise.

Fig.

Fig. X is a modification of the grate which is employed to replace the slide C, figs. I and IX, for the slags. The grate is arranged to be lowered with its front part, and the cinders are removed by the opening P gained thereby. Such construction will be practicable for vessels and locomotives.

The bell-crank lever which supports the front part of the movable grate may be turned on its fulcrum by means of the slide rod, which may be moved by a fixed hand-wheel turning on a thread on the slide rod, or which may be moved by any convenient contrivance. The altered position is shown in dotted lines.

Figs. XI to XIV show various applications of the apparatuses described. Fig. XI is a longitudinal section of the apparatus adapted to a stove. Fig. XII is a plan of the same. The introducing pipe with adherent parts is to be turned round its fulcrum. Fig. XIII is an elevation in section of the improved apparatus adapted for a smelting furnace; and Fig. XIV is a plan of the same.

H′ are exits through which the products of combustion pass off in the direction of the arrows. F is a blast pipe which conducts the blast through the holes *d′* into the hearth M.

Sometimes a box, W, filled with water, may be arranged under the grate, as indicated in fig. XI, so that the bars, being partially touching the water, are preserved from burning thereby.

In this case a blast pipe, F′, as designed, is commonly used for creating the necessary draught from below the bars.

Figs. XV to XX represent several arrangements of the grate adapted to a tubular boiler.

Fig. XV is a front elevation; and fig. XVI a longitudinal section.

In this arrangement the channel is of considerable depth, the sides of which, instead of several terraces, are commonly formed by the bars X, which are provided with holes for the passage of the air. The other bars and the slide for the cinders are arranged as indicated by the drawing.

In the channel there is a slide, F, similar to that described with reference to figs. VI*a* and VI*a*, which is intended to drive the fuel to the rear of the grate. This slide may also be composed of single bars, united by cross-bars, which have the longitudinal section of a blunt wedge, thus ⌐¬, and on moving to and fro move between the adjoining fire-bars, the back of the wedge is turned towards the fire-bridge. By this arrangement, in the first instance, the open grate area is enlarged, and in the second instance the fuel is more effectively driven to the rear (by the back of the wedge).

The second arrangement is shown in figs. XVII and XVIII.

Fig. XVII is a front elevation. Fig. XVIII is a longitudinal section.

This grate is considerably inclined at the rear end, so that there remains but a narrow space between the rear part of the grate and the bottom of the flame-tube, too narrow for the removal of the cinders.

In order to accomplish this removal, the end part of the grate, with the bearer of the bars, is not fastened to the flame-tube, but is movable by means of the bar S on the fulcrum Z. Such bar may be introduced and withdrawn as required; it forms a lever with the fulcrum at *t*.

As soon as it is necessary to remove the cinders, the rear part of the bars is lifted by the lever S, and through the opening gained thereby the cinders are easily withdrawn.

In order to render this still more easy the movable apparatus or carriage N may be employed.

This apparatus may be moved from the back part to the front, or *vice versa*, by means of a hook or otherwise. It is intended to receive the cinders falling from the grate, and to carry them to the front.

The removing of the cinders may be also effected in the following manner:—

The grate may be constructed of two separate parts, of which the rear one is fixed to the carriage N, and these parts may be drawn together to the front of the boiler, in the manner shown in dotted lines in fig. XVIII, so that the cinders may easily be removed.

In this place the introduction pipe is not arranged in the middle, but on the side of the flame-tube, in order to be able, in the case of there being two flame-tubes in a boiler, to effect the rotation of the two spiral scrolls or screws by one endless screw only.

The introduction pipe may be arranged in an inclined position, as shown by dotted lines, in order to gain the space for two stoke-holes.

The third arrangement is illustrated in figs. XIX, XX, and XX*a*.

Fig. XIX is a front elevation. Fig. XX is a longitudinal section. Fig XX*a* is a cross section of the channel in the line *a b*.

This arrangement is not much different from the first one. The air-holes of the bars X are otherwise arranged. The hinder bars are solid instead of being lattice-like, as in fig. XVI. The slide F is dispensed with.

Fig. XIX*a* shows a construction of part of the front wall of the boiler in horizontal section, which is intended to prevent the doors H from becoming overheated.

The doors and the respective parts of the front plate are furnished with ribs, which join in such a manner that there remain small spaces between the single ribs, in which an active circulation of air takes place.

Fig XXI shows in longitudinal section the adaptation of the described apparatus to a locomotive.

Fig. XXII is the same in transverse section. Fig XXIII represents the manner of driving a slide or plunger, *a*, in A. Figs. XXIV and XXV are transverse sections of divers fire-bars, which procure the utmost possible open grate area.

Having described the nature of the said invention, and the manner of carrying it into practical effect, I would have it understood that what I claim as new is—

1. The arrangement in a boiler or oven-furnace of a grate, in the forward part of which a channel gradually rising towards the rear part is formed, substantially as described.
2. The feeding by mechanical power of the fuel on to a grate, in the forward part of which a channel gradually rising towards the rear part is formed, for the purpose of feeding the fuel from underneath, substantially as described.
3. The arrangement of the slide C′, figs. I and III, in combination with a grate, in the forward part of which a gradually rising channel for feeding the fuel from underneath is formed.

4. The introduction of air into the mass of fuel on the grate by means of the air or blast pipe F, fig. 1, through holes in the plate *d* of the channel E, which forms the connection between the feeding apparatus and the channel in the grate.
5. The form of the connecting channel E, increasing in width up to the width of the plate *i* in the grate, substantially as described.
6. The arrangement of two stoke-holes, H, one on each side of the channel E, in the front of the boiler, as illustrated in fig. 3.
7. Forming the sole of the channel in the grate by the movable plate F, fig. VI, VI*a*, for the more easy movement of the fuel on to the grate, and moving this plate by the same mechanism by which the feeding of the fuel into the channel is effected, substantially as described.
8. The arrangement for lowering the rear part of the grate, as illustrated in fig. X, as a substitute for the slag slide C, figs. I, VI, and IX.
9. The employment of a vibrating plate or of a piston in the pipe for feeding the fuel, as a substitute for the screw, as illustrated in fig. IX.
10. The arrangement of a water-trough underneath the grate, in order to prevent the burning of the bars and the admission of air between the basin and the grate-bars, as illustrated in fig. XI.
11. Forming the rising channel in the grate by a plate, *i* (fig. XX), in place of adjoining bars, as illustrated in figs. III and XII.
12. Mounting the feed apparatus for the above-mentioned grate on a fulcrum, so as to turn the feed apparatus off from the front wall of the boiler or oven, as illustrated in fig. XII.
13. The employment of the described method of feeding the fuel to a smelting oven or furnace, as illustrated in figs. XIII and XIV.
14. The arrangement of the channel in the grate with a movable plate, F, or with a number of grate-bars connected together by transverse bars of wedge-like shape, in longitudinal sections, in combination with the lateral grate-bars or plate X, arranged within the fire-tube of a steam boiler, as illustrated in fig. XVI.
15. The arrangement of the feeding apparatus on one side of the front of a fire-tube boiler, for the purpose of driving the two feed apparatuses of the two fire-tubes in a steam boiler by one endless screw or worm only, substantially as described.
16. The arrangement of the grate in a fire-tube of a steam boiler, with the inclined rear part, which may be raised for the discharge of the slags by means of the carriage N, or constructing such carriage for the removal of slag, together with that part of the rear of the grate, as illustrated by fig. XVIII.
17. The peculiar construction of the channel in the forward part of the grate, as illustrated in figs. XX and XX*a*.
18. The construction of the doors closing the stoke-holes with ribs, by which ribs passages for the circulation of air are formed, in order to avoid overheating of these doors, as illustrated in fig. XIX*a*.
19. Applying the grate with its rising channel and the mechanical feed of fuel from underneath in locomotives and traction engines.
20. The peculiar form of the hopper of the fuel-feeding apparatus, the side of this hopper facing the front wall of the boiler, running parallel with the pitch of the scroll, in order to prevent the blocking of the fuel, substantially as described.

In witness whereof, I, the said August Louis Schultz, have hereto set my hand and seal, this third day of September, 1879.

AUGUST LOUIS SCHULTZ.

Witnesses—

CARL HEINRICH KNOOP.

WILHELM WIESENHUTTER.

This is the specification, marked A, referred to in the annexed Letters of Registration granted to August Louis Schultz, this eighteenth day of December, A.D. 1879.

AUGUSTUS LOFTUS.

REPORT.

Sydney, 26 November, 1879.

Sir,

The application of Mr. A. L. Schultz for Letters of Registration for "Improvements in the Method of and Apparatus for the Combustion of Fuel" having been referred to us, we have examined the specification and drawings accompanying the same, and have now the honor to report that we see no objection to the issue of Letters of Registration as prayed for.

We have, &c.,

J. SMITH.

CHAS. WATT.

The Principal Under Secretary.

[Drawings—two sheets.]

Fig. I.

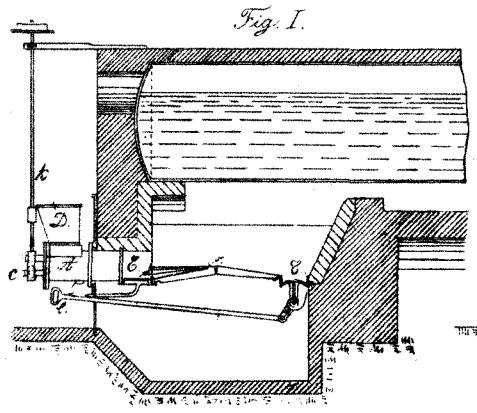

Fig. II.

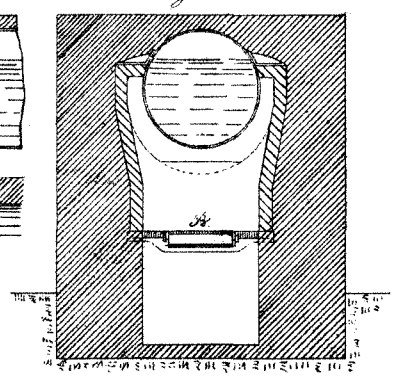

Fig. III.

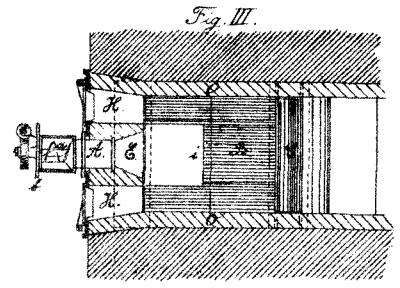

Fig. IV.

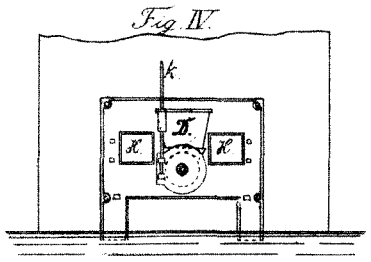

Fig. V.

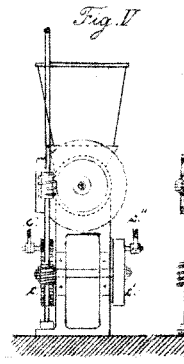

Fig. VI.

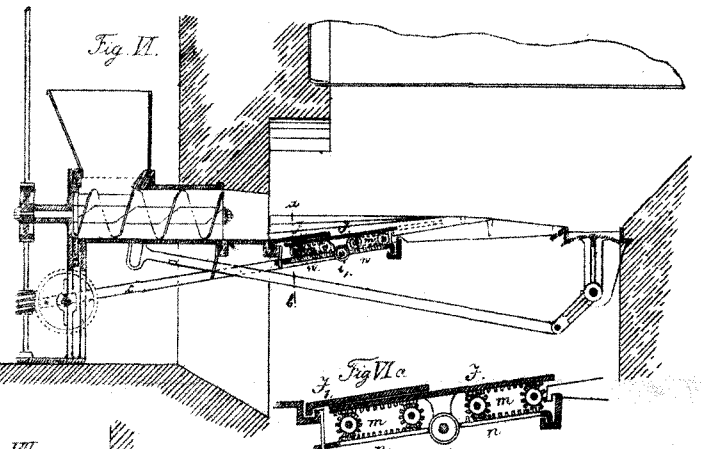

Fig. VI a.

Fig. VII.

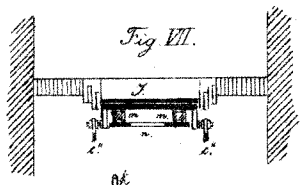

Fig. VIII.

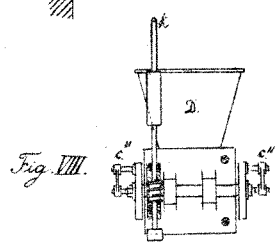

Fig. X.

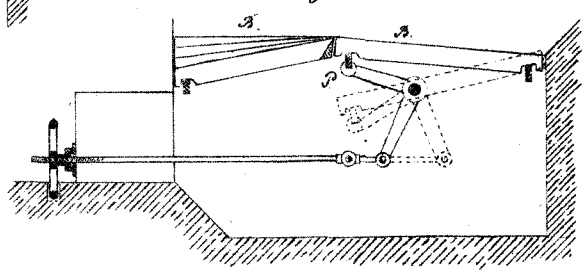

Fig. IX.

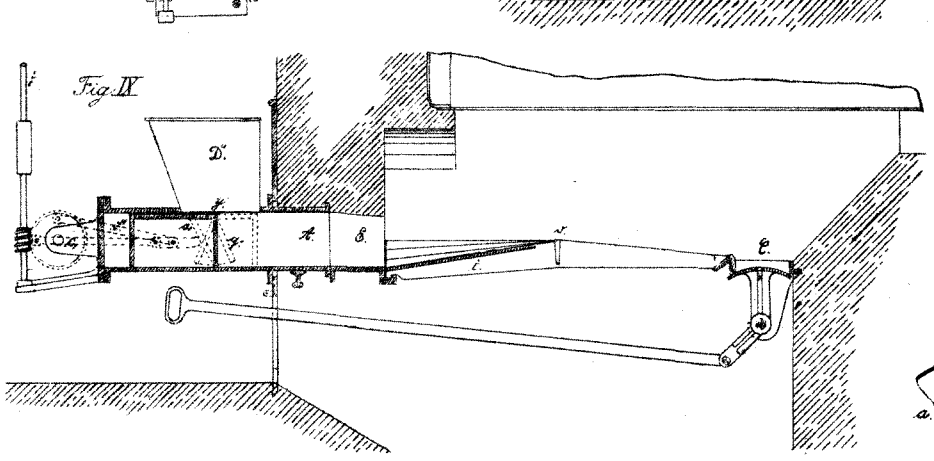

Fig. XI.

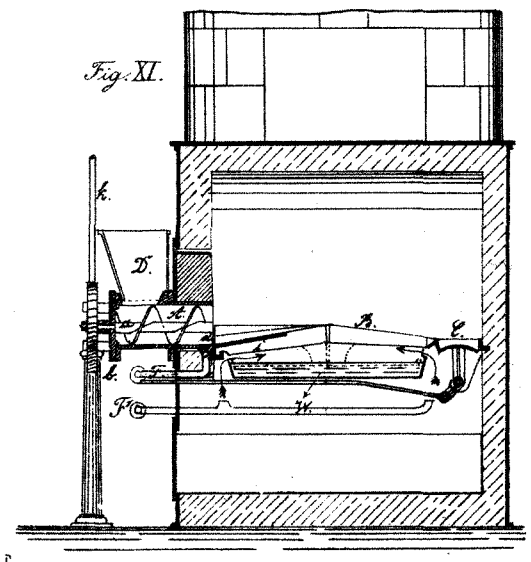

Fig. XII.

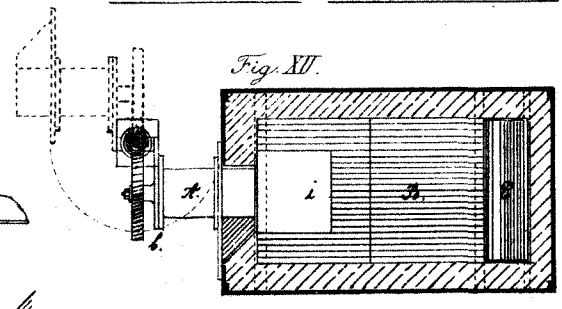

Fig. XIII.

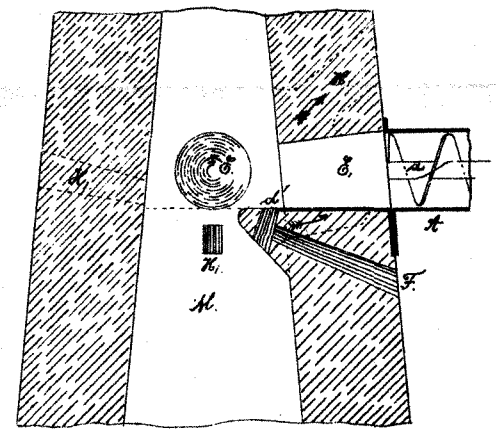

Fig. XIV.

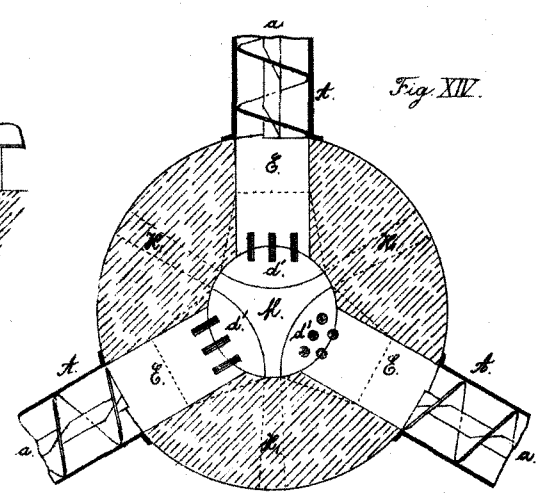

August Louis Schultz

This is the sheet of Drawings marked "B" referred to in the annexed Letters of Registration granted to August Louis Schultz this eighteenth day of December 1879. –

"Augustus Loftus"

Carl Heinrich Knoop

Wilhelm Wiesenhütter

(Sig. 198-)

PHOTO-LITHOGRAPHED AT THE GOVT. PRINTING OFFICE, SYDNEY, NEW SOUTH WALES.

Fig. XVI.

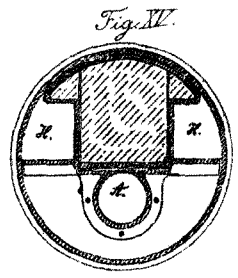

Fig. XVII.

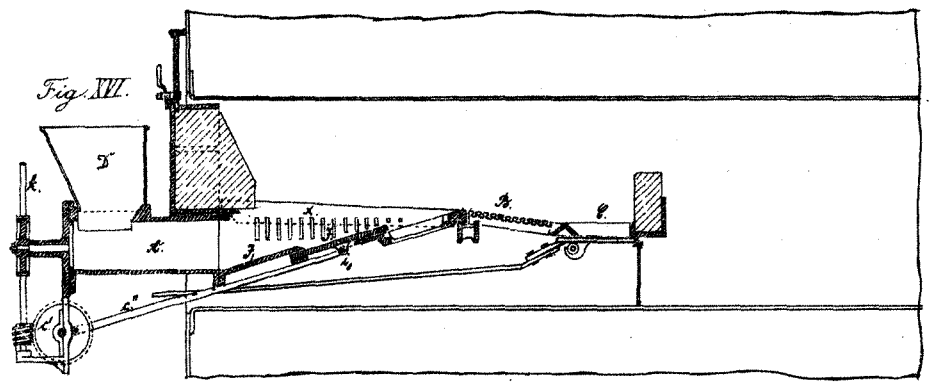

Fig. XVIII.

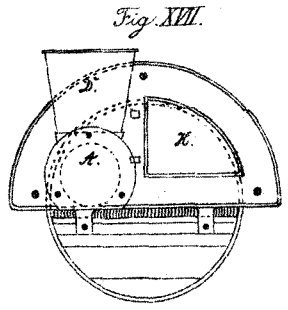

Fig. XVIII.

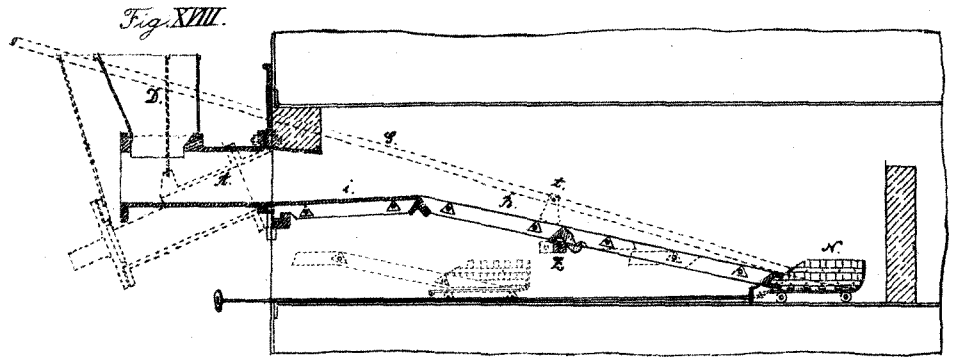

Fig. XIX.

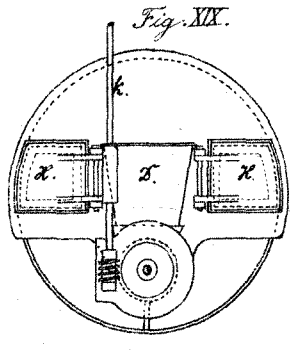

Fig. XIX a.

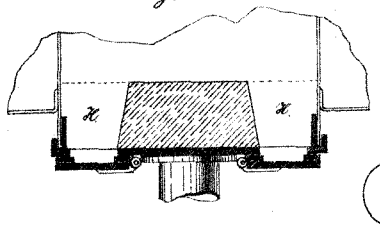

Fig. XX a.

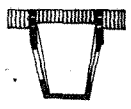

Fig. XX.

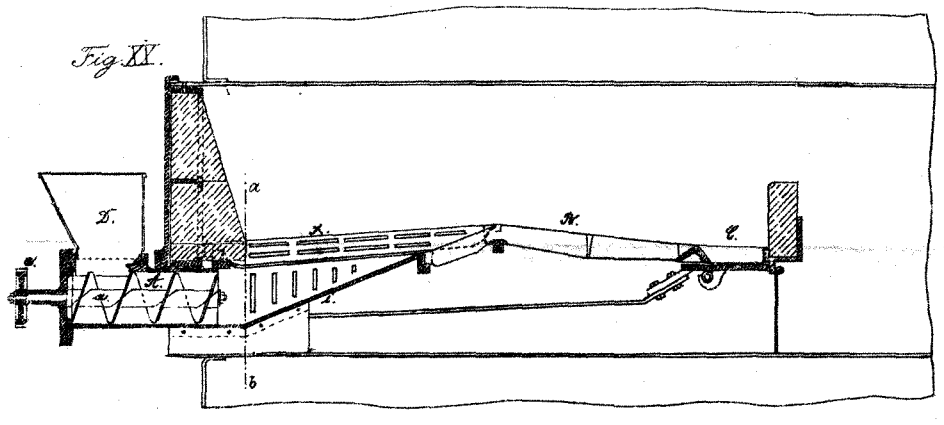

Fig. XXIII.

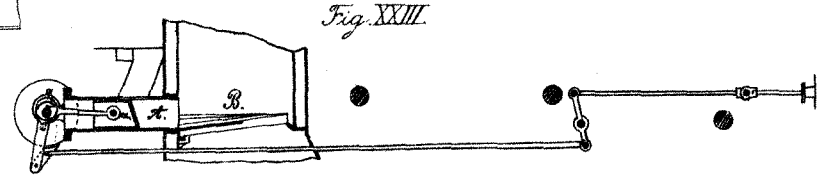

Fig. XXI.

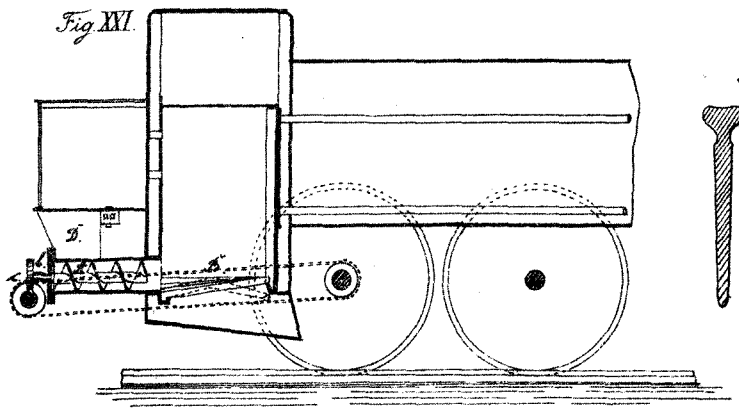

Fig. XXIV.

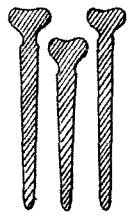

Fig. XXV.

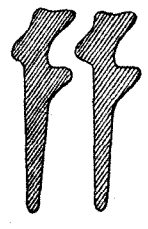

Fig. XXII.

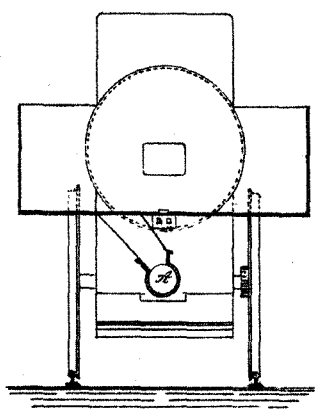

Carl Heinrich Knoop
Wilhelm Wiesenhutter

This is the Sheet of Drawings marked "C" referred to in the annexed Letters of Registration granted to August Louis Schultz this eighteenth day of December A.D. 1879.

"Augustus Loftus"

August Louis Schultz

PHOTO-LITHOGRAPHED AT THE GOVT. PRINTING OFFICE, SYDNEY, NEW SOUTH WALES.

(Sig. 198)

A.D. 1879, 31*st December.* No. 788.

IMPROVEMENTS IN MATERIAL AND APPARATUS FOR THE ENRICHMENT OF INFLAMMABLE GAS.

LETTERS OF REGISTRATION to Messrs. James Livesey, Joshua Kidd, and James Kidd, for Improvements in Material and Apparatus for the Enrichment of Inflammable Gas.

[Registered on the 31st day of December, 1879, in pursuance of the Act 16 Vic. No. 24.]

BY His Excellency the Right Honorable Sir Augustus William Frederick Spencer Loftus (commonly called Lord Augustus Loftus), Knight Grand Cross of the Most Honorable Order of the Bath, a Member of Her Majesty's Most Honorable Privy Council, Governor and Commander-in-Chief of the Colony of New South Wales and its Dependencies.

TO ALL TO WHOM THESE PRESENTS SHALL COME, greeting:

WHEREAS James Livesey, of No. 9, Victoria Chambers, Victoria-street, London, in the county of Middlesex, in England, civil engineer, and Joshua Kidd, and James Kidd, both of Englantine Road, Wandsworth, in the county of Surrey, in England, aforesaid, gas engineers, have by their Petition humbly represented to me that they are the authors or designers of a certain invention or improvement in manufactures, that is to say, of an invention entitled "Improvements in Material and Apparatus for the Enrichment of Inflammable Gas," which is more particularly described in the specification, marked A, and the four sheets of drawings, marked B, C, D, and E, respectively, which are hereunto annexed; and that they, the said Petitioners, have deposited with the Honorable the Treasurer of the said Colony of New South Wales the sum of Twenty Pounds sterling, for defraying the expense of granting these Letters of Registration, as required by the Act of Council, sixteenth Victoria, number twenty-four; and have humbly prayed that I would be pleased to grant Letters of Registration, whereby the exclusive enjoyment and advantage of the said invention or improvement might be secured to them for a period of fourteen years: And I, being willing to give encouragement to all inventions and improvements in the arts or manufactures which may be for the public good, and having received a report favourable to the prayer of the said Petition, from competent persons appointed by me to examine and consider the matters stated therein and to report thereon for my information, am pleased, with the advice of the Executive Council, and in exercise of the power and authority given to me by the said Act of Council, to grant, and do by these Letters of Registration grant unto the said James Livesey, Joshua Kidd, and James Kidd, their executors, administrators, and assigns, the exclusive enjoyment and advantage of the said invention or improvement, for and during the term of fourteen years from the date hereof; to have, hold, and exercise unto the said James Livesey, Joshua Kidd, and James Kidd, their executors, administrators, and assigns, the exclusive enjoyment and advantage thereof, for and during and unto the full end and term of fourteen years from the date of these presents next and immediately ensuing, and fully to be complete and ended: Provided always, that if the said James Livesey, Joshua Kidd, and James Kidd shall not, within three days after the granting of these Letters of Registration, register the same in the proper office in the Supreme Court, at Sydney, in the said Colony of New South Wales, then these Letters of Registration, and all advantages whatsoever hereby granted, shall cease and become void.

In witness whereof, I have hereunto set my sign manual, and have caused the present Letters of Registration to be sealed with the seal of the said Colony of New South Wales, at Government House, Sydney, in New South Wales, this thirty-first day of December, in the year of our Lord one thousand eight hundred and seventy-nine.

[L.S.] AUGUSTUS LOFTUS.

A.D. 1879. No. 788.

Improvements in Material and Apparatus for the Enrichment of Inflammable Gas.

A.

SPECIFICATION of JAMES LIVESEY, of No. 9, Victoria Chambers, Victoria-street, London, in the county of Middlesex, in England, civil engineer, and JOSHUA KIDD, and JAMES KIDD, both of Englantine Road, Wandsworth, in the county of Surrey, in England, aforesaid, gas engineers, for an invention entitled "Improvements in Material and Apparatus for the Enrichment of Inflammable Gas."

OUR invention relates to a novel material and apparatus for enriching inflammable gas by carburisation.

The material which we employ for this purpose is the solid hydro-carbon naphthaline, which at present is a comparatively waste product, but which when volatilized furnishes a vapour of uniform character and of great illuminating power. We prepare this material in a form convenient for packing, transport, and use, in the following manner:—

We purify the crude naphthaline by sublimation, and then mould it by fusion in the form of sticks or rods, like candles, or in that of balls or pellets which latter may be produced by dropping the fused material through a considerable height. We apply the material thus prepared in apparatus which may be varied in form and arrangement to suit different kinds of lighting and different localities in which they are to be used.

For single burners or small clusters of burners we employ apparatus such as are shown in figures 1, 2, 3, and 4. Figure 1 represents a section of a spherical vessel, A, partially filled with naphthaline in pieces introduced into the vessel through the hole C, which can be tightly closed by a screw-tap, D. Gas is admitted into the vessel through the plug J, being led to the upper part of the vessel by a pipe, E, and after flowing over the carburating material and becoming mixed with a portion of its vapour, it passes by the pipe F, to the burner G. Above the gas flame there is fixed to the vessel a metallic plate, H, which conducts heat to the vessel and gradually melts and vapourises the naphthaline therein, as shown in figure 2.

Figure 3 represents a similar vessel arranged for two lights, a similar form being applicable to a greater number. For convenience of filling these vessels, they are made to lift in and out of the socket I, figure 4. This socket is made with a screw-thread which corresponds with that of an ordinary gas-burner, so that it can be affixed to an existing chandelier pendant or gas bracket, by removing the burner and in its place screwing the socket I. The socket I is coned to receive the plug J, forming a gas-tight joint giving passage to the gas from the service pipe to the carburetting apparatus.

For a group of burners we employ apparatus such as is shown in figure 5. A is a main reservoir containing a considerable store of the carburetting material, and connected to the carburetting chamber *a*, by a pipe, K. Gas is admitted to both vessels A, *a*, by the pipe E, and flows to the burner by the pipe F, after mixing with the vapour in the vessel *a*.

When the gas is lighted, the vessel *a* becomes sufficiently heated to melt and vapourise the small quantity of naphthaline contained in it, so as to carburate the gas. A certain amount of heat from the gas ascends and melts the naphthaline in the larger vessel A, so that it may flow into the vessel *a*. The object of having the small detached carburetting chamber *a* is that the gas may be enriched more rapidly than if the whole amount of material had to be heated to the carburetting point; it also allows a greater variation of heat without involving excessive carburation, the area in *a* from which the vapour ascends being comparatively small. Figure 6 represents an apparatus similar in construction, except that two groups of burners are attached to the vessel, and a supplementary jet of gas, L, is provided to melt the material in the reservoir, which may be as shown, of spherical form. In this apparatus the gas-pipe F is connected only to the small chamber *a*, and not with the main reservoir, this arrangement giving convenience for feeding the carburetting material whilst the gas is burning; the gas being excluded by the liquid in the pipe K. Figure 7 shows a modified form of a like arrangement; the small carburetting chamber *a* instead of being outside the vessel is fixed in a tube within the reservoir A. A shield, M, in the form of a dish, prevents excess of heat from acting upon the reservoir A. Figure 8 shows a carburetting vessel surrounded with an outer casing, N, connected to a tube or chimney, O.

The carburetting vessel is heated by the product of combustion ascending the tube O, which may also serve for assisting ventilation; the heat may be regulated by the valve P. Figure 9 shows an arrangement for carburetting by the heat of the gas imparted to it before it enters the vessel A, by passing through a coil heated by the products of combustion. The gas so heated may be delivered simply over the surface of the hydro-carbon, or the gas-pipe may be continued in the form of a coil through the material, as indicated by the dotted lines.

Figure 10 shows an arrangement of sun burner.

The heat for vapourising the material in the chamber A which may be regulated by the damper *p*, is imparted by the steam coil Q.

A small quantity of water is put in the coil, which is converted into steam by the heat of the gas-flame below, and the water of condensation flows back to the bottom of the tube, to be again converted into steam; or the steam may be made to enter the coil at the tap, as shown by the dotted lines, the water of condensation returning by the lower branch of the tube. An arrangement suitable for a length of piping is shown at *f*. The lights being placed beneath the gas-pipe keep it sufficiently heated to allow the naphthaline gas to travel to the burners without condensation in the pipes. Figure 11 represents a carburetting vessel enclosed in a steam casing, S. Steam from any convenient source enters the pipe R, and fills the casing S, passing either to another vessel or escaping into the air; the steam not only melts and vapourises the material in the chamber A, but travels along a pipe, T, enclosing the gas-pipe F, to any convenient distance, keeping it hot and preventing condensation.

Pipes for supplying groups of burners may branch either from the carburetting vessel itself or from the pipe F, as shown at U U.

Figure 12 represents an automatic arrangement for regulating the heat applied to vapourise the carburetting material in the vessel A. This vessel is surrounded by an outer casing, V, open at the top; in the bottom of the casing is a hole or opening, W, through which the heat from the small gas-jet X ascends to play on the bottom of the vessel. Inserted in the vessel A is a tube, Y, open at the top, but closed at the bottom; this tube is partially filled with wax or other similar material which is solid when cold, but becomes liquid when heated. Into this tube is inserted rod Z connected by a rod, *a*, and the plate *b*, which is sufficiently large to cover the opening W. When the gas is turned off by the cock lever *d*, a chain, *c*, attached to the lever raises the rods Z and *a*, and the plate *b*, uncovering the hole W. When the

the gas is turned on, the lever and chain assume the position shown by the dotted lines, but the material in the tube Y being solid, sustains the rod Z, holding the valve *b* open. As the vessel A becomes heated the material in the tube Y gradually melts, allowing the rod Z to descend, so that the valve *b* closes the aperture W, thus shutting off the direct heat from the flame X; sufficient heat however is afterwards imparted by conduction and radiation from the outer casing to vapourise the carburetting material in the vessel A.

Another way of giving motion to the regulating valve is by the expansion or movement of a diaphragm, as shown at figure 13. The tube L inside the vessel is filled with oil or other suitable liquid, and communicates with the chamber closed by the diaphragm to the smaller tube L¹. As the hydro-carbon in the chamber A becomes heated it conveys heat to the liquid inside the tube L, which expands the liquid in the diaphragm chamber, thereby gradually raising the valve G until the flame C is reduced sufficiently to prevent over-carburation. Instead of the tube L being inside the vessel, a small expansion chamber might be fixed on the outside of the vessel and be connected with a diaphragm chamber, or the diaphragm chamber itself may be fixed to the outside of the vessel and with the valve direct.

Instead of the expansion tube L being placed inside, it can be fixed on the outside of the vessel.

Also, instead of employing the expansion of liquid for the purpose of regulation, we can employ the different expansion of two metals, as show at figure 14.

I I are plates, consisting of two thin strips of different metal, such as copper and iron, soldered or brazed together. As the heat in the carburetting chamber increases, it is transmitted to these plates, causing it to assume a more curved form, as indicated by the dotted lines, thus partially closing the regulating valve which is attached to levers connected with the ends of the plates; or instead of curved plates a curved or bent flat tube may be employed filled with oil or other liquid which in expanding will also move the tube and valve as described.

It is not necessary for the regulating valve and burner to be together,—the valve may be made separate and fixed at the side or other convenient place, so as to be operated by the curved plates or the expansion of different metals, as shown at figures 15 and 16.

At figure 15 the small gas supply pipe E is led to and from the regulating valve which is fixed at the side of the vessel to burners or a burner underneath, and the valve is connected to the bent plates fixed to the vessel A, as shown; or instead of the two plates, a metal tube such as is shown in section at figure 15*a*, filled with liquid, may be employed. The valve, instead of being at the bottom of the pipe as shown in figure 14, may be fixed at the top of the pipe as at G, figure 17. The stem or rod of the valve is made of iron, and the pipe E of copper or other metals having different degrees of expansion, or the valve may be actuated by fixing its rod above instead of below, as at figure 18.

By the adjusting screw J, the range of the valve can be regulated so as to increase or decrease the amount of gas admitted to the heating burner or burners.

When solid naphthaline is employed as the carburetting agent, it is sometimes necessary in cold situations to keep the pipe M through which the vapourised gas passes to the burners hot, so as to prevent condensation and crystallization round the pipe.

For this purpose we lead a tube or chimney from the top of the fire-box B, figure 14, into the casing N which surrounds the pipe M, as shown by the dotted lines; through the tube the heat ascends from the burner below.

The main gas inlet pipe O passes through the large burner P, and through the outlet pipe M, into the interior of the vessel A, where it mixes with the hydro-carbon vapour, and passes up through the pipe M to the burner Q. The small gas inlet E for supplying the heating burners is taken from the interior of the main inlet pipe O.

The internal tube or fire-box, even if it be not furnished with a regulating valve, is of advantage, as the heating flame may vary to a considerable extent without causing excessive carburation, the effect of the heat being principally at the top of the heating chamber, which is generally above the liquid.

Having thus described the nature of our invention and means of carrying it into practical effect, we claim—

First—The application substantially as herein described of the solid hydro-carbon napthaline for the purpose of enriching illuminating gas.

Second—The use of a metal conductor heated by the gas flame for fusing and vapourising the naphthaline in the carburetting vessel.

Third—The means described, with reference to figures 1, 2, 3, and 4, for applying a removable carburetting apparatus in the place of an ordinary burner.

Fourth—The employment of a comparatively small carburetting vessel in connection with a large reservoir of carburetting material as for purposes herein set forth with reference to figures 5, 6, and 7.

Fifth—Heating the carburetting vessel by the products of combustion of the burners acting directly thereon or conveyed thereto by gas or steam, as described with reference to figures 8, 9, and 10.

Sixth—Heating the carburetting vessel and the pipes conveying the enriched gas by steam admitted to a casing surrounding them, as described with reference to figure 11.

Seventh—Regulating the heat applied to the carburetting vessel by means of apparatus such as is described with reference to figure 12.

Eighth—Regulating the heat applied to the carburetting vessel by a gas valve governed by expansion of metal or liquids, caused by the heat in the vessel itself, substantially as described in reference to figures 13, 14, 15, 16, 17, and 18.

In

Improvements in Material and Apparatus for the Enrichment of Inflammable Gas.

In witness whereof, we, the said James Livesey, Joshua Kidd, and James Kidd, have hereto set our hands and seal, this twenty-fourth day of November, one thousand eight hundred and seventy-nine.

JAMES LIVESEY.
JOSHUA KIDD.
JAMES KIDD.

By their duly authorized Attorney—
JOHN GORDON.

This is the specification, marked A, referred to in the annexed Letters of Registration granted to James Livesey, Joshua Kidd, and James Kidd, this thirty-first day of December, A.D. 1879.

AUGUSTUS LOFTUS.

REPORT.

Sir, Sydney, 6 December, 1879.

The application of Messrs. J. Livesey, and J. and J. Kidd, for Letters of Registration for "Improvements in Material and Apparatus for the Enrichment of Inflammable Gas," having been referred to us, we have examined the specification and drawings accompanying the same, and have now the honor to report that we see no objection to the issue of Letters of Registration as prayed for.

We have, &c.,
J. SMITH.
CHAS. WATT.

The Principal Under Secretary.

[Drawings—four sheets.]

Sydney: Thomas Richards, Government Printer.—1881.

B

Fig 1.

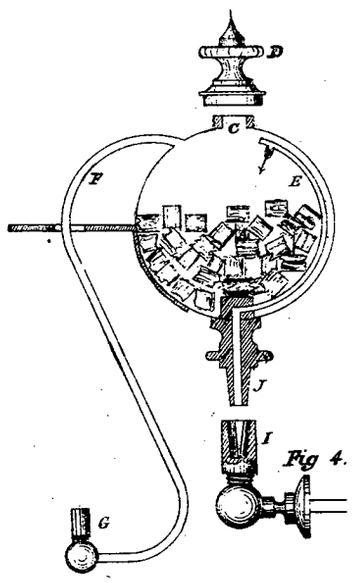

Fig 4.

Fig 2.

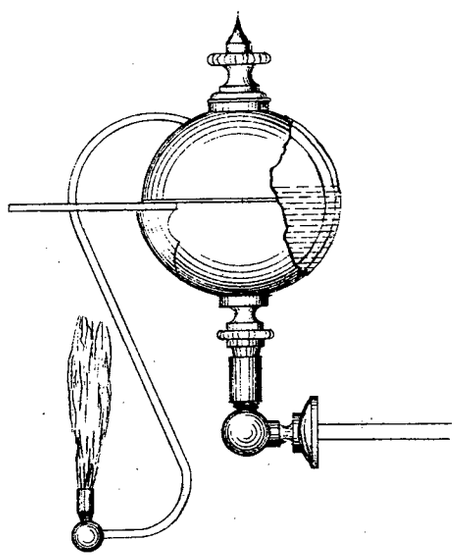

Fig 3.

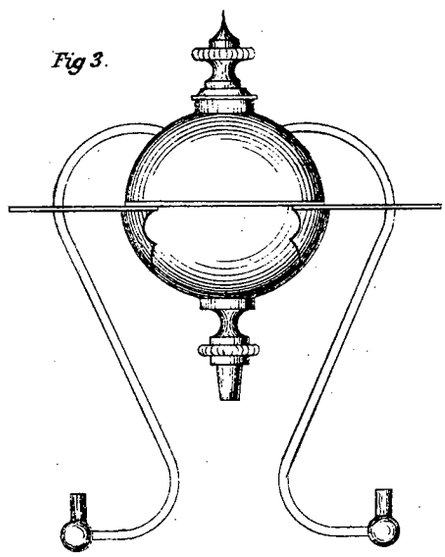

This is the Sheet of Drawings marked B. referred to in the annexed Letters of Registration granted to James Livesey Doolma Kidd and James Kidd this thirty first day of December A.D. 1879.

Augustus Loftus

(Sig. 198-)

PHOTO-LITHOGRAPHED AT THE GOVT. PRINTING OFFICE, SYDNEY, NEW SOUTH WALES.

C.

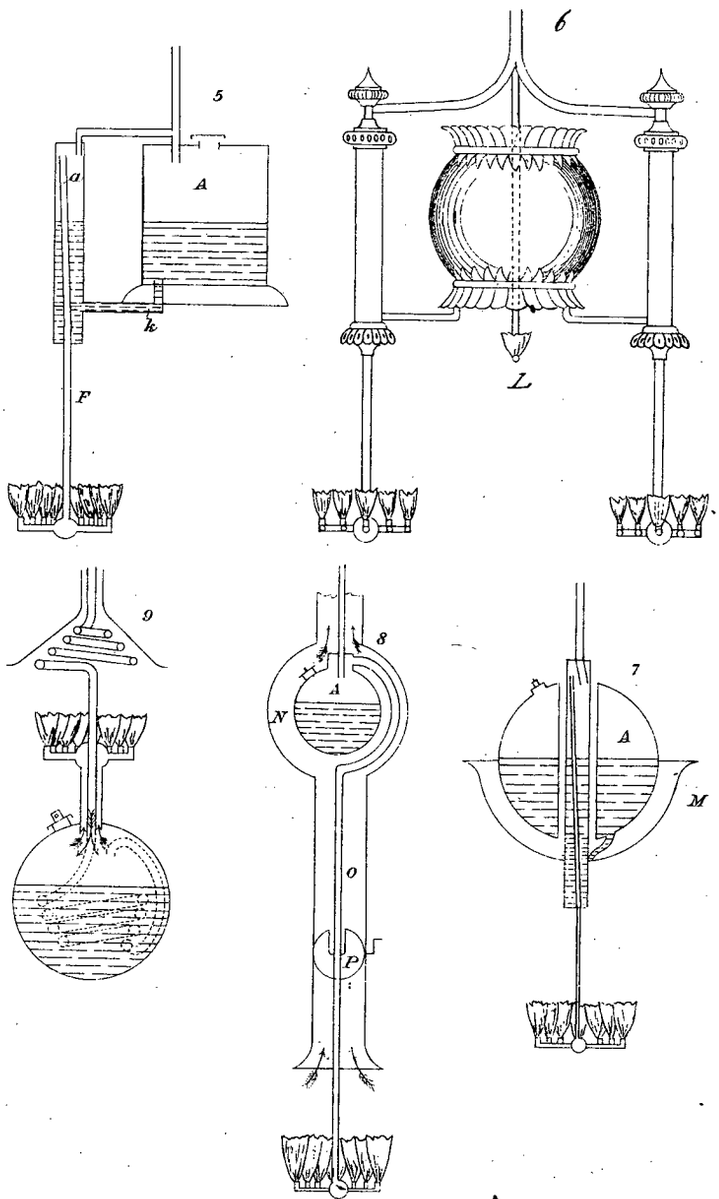

This is the Sheet of Drawings marked "C" referred to in the annexed Letters of Registration granted to James Livesey Joshua Kidd and James Kidd this thirty first day of December A.D. 1879

"Augustus Loftus"

(Sig. 189-)

PHOTO-LITHOGRAPHED AT THE GOVT. PRINTING OFFICE, SYDNEY, NEW SOUTH WALES.

D

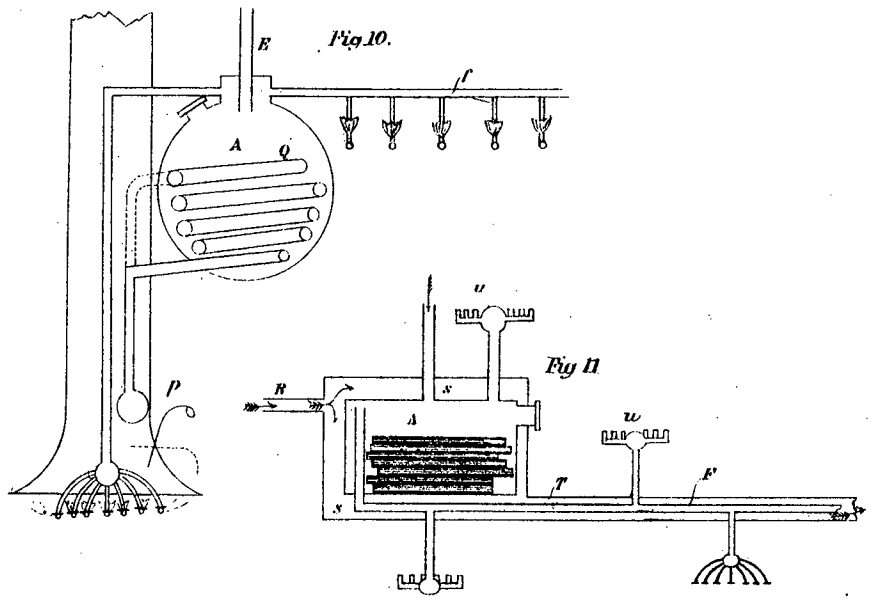

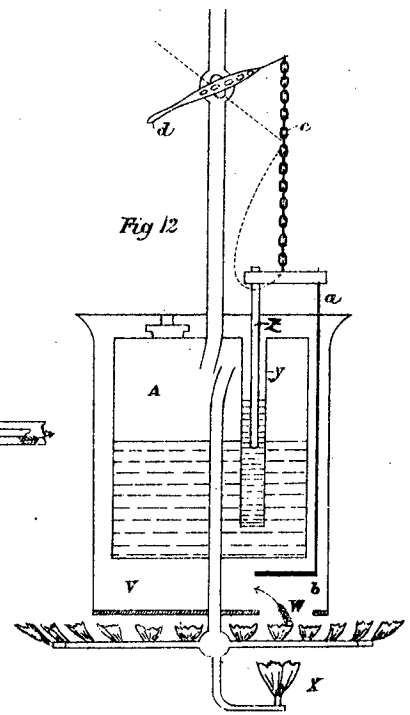

This is the Sheet of Drawings marked "D" referred to in the annexed Letters of Registration granted to James Livesey Joshua Kidd and James Kidd this Thirty first day of December A.D. 1879

Augustus Loftus

(Sig. 198)

PHOTO-LITHOGRAPHED AT THE GOVT. PRINTING OFFICE,
SYDNEY, NEW SOUTH WALES.

E.

Fig 13

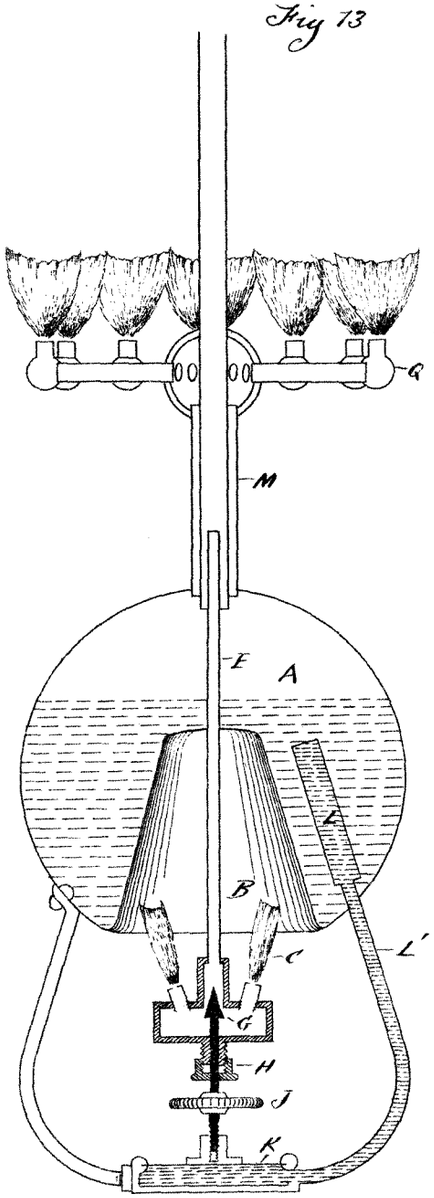

Fig. 18.

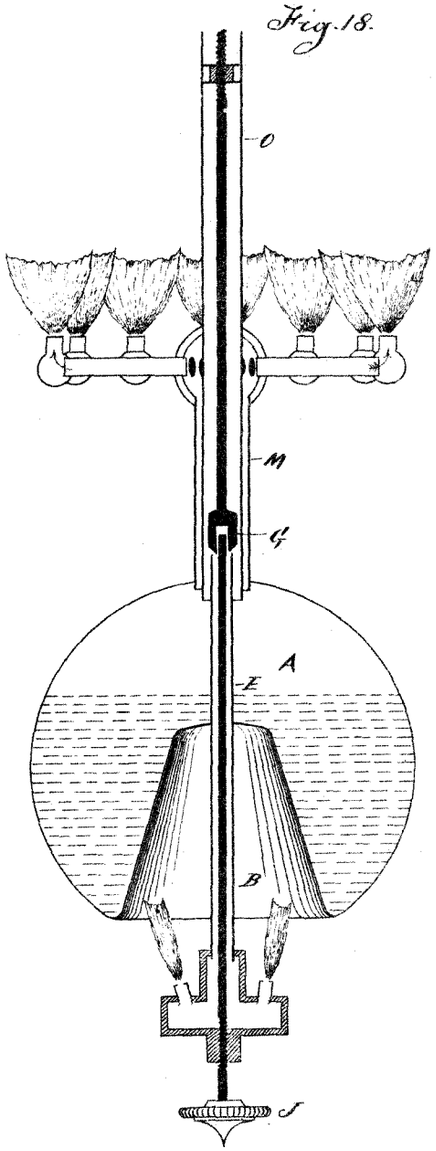

Fig 17

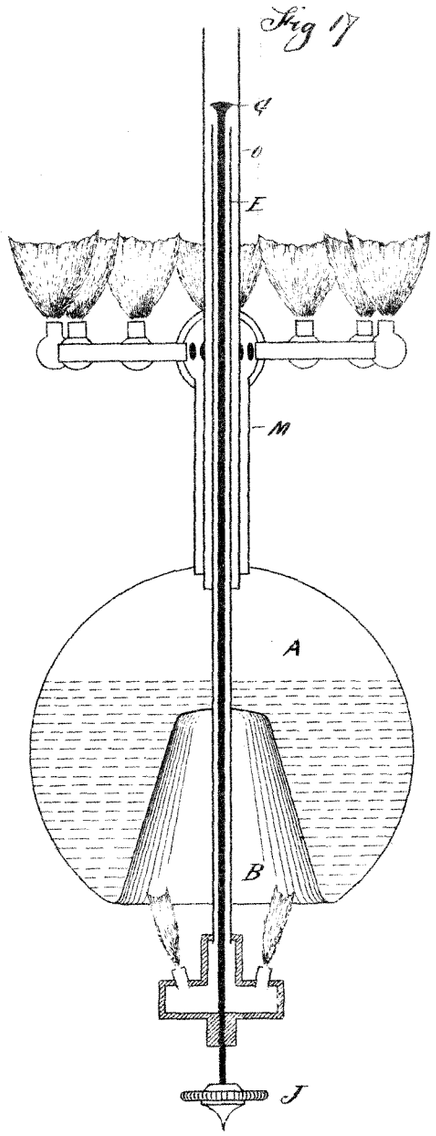

Fig. 15.

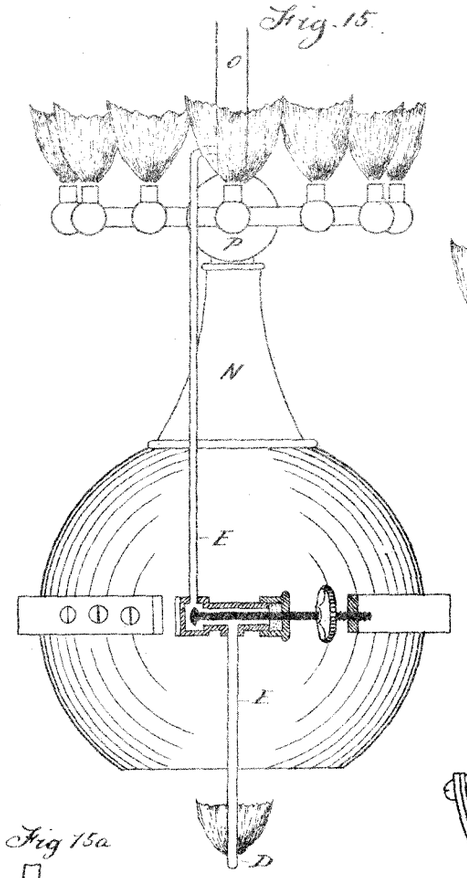

Fig 15a



Fig 16.

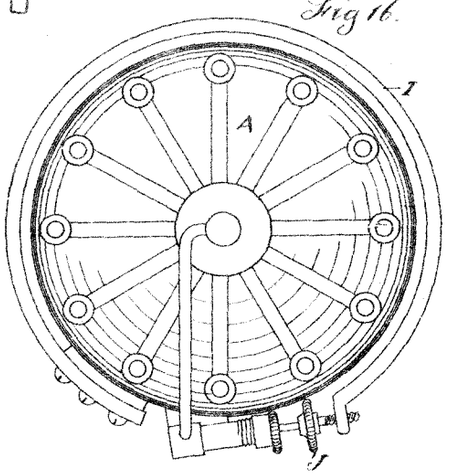

Fig 14

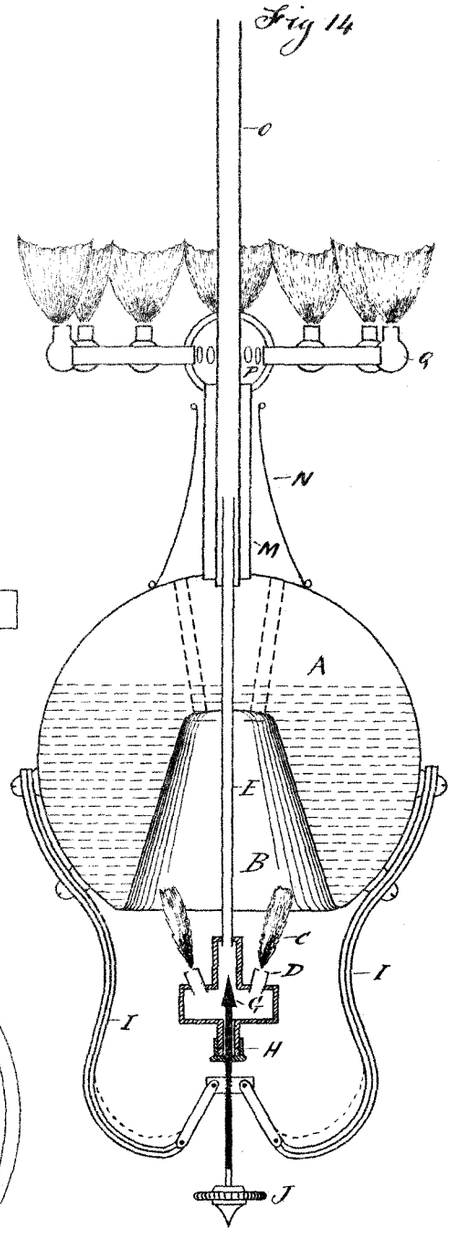

This is the Sheet of Drawings marked "E" referred to in the annexed Letters of Registration of Patent to James Loesey Joshua Kidd and James Kidd this thirty first day of December A. D. 1879

"Augustus Loftus"

(Sig. 198-)

PHOTO-LITHOGRAPHED AT THE GOVT. PRINTING OFFICE, SYDNEY, NEW SOUTH WALES.

1882.

LEGISLATIVE ASSEMBLY.

NEW SOUTH WALES.

LETTERS OF REGISTRATION OF INVENTIONS

UNDER

16 VICTORIA, No. 24;

FOR

1880.

Printed in accordance with Resolution of Legislative Assembly.

SYDNEY: THOMAS RICHARDS, GOVERNMENT PRINTER.

1882.

[5s.] 357—*a*

1882.

LEGISLATIVE ASSEMBLY.

NEW SOUTH WALES.

LETTERS OF REGISTRATION OF INVENTIONS.

(DESCRIPTIONS, SPECIFICATIONS, &c., ACCOMPANYING APPLICATIONS FOR.)

Printed in accordance with Resolution of Legislative Assembly.

RETURN (in part) to an *Address* of the Honorable the Legislative Assembly of New South Wales, dated 10 May, 1861, A.M., praying that His Excellency the Administrator of the Government would be pleased to cause to be laid upon the Table of this House (in addition to the Return already upon the Table),—

"(1.) A copy of the Descriptions and Specifications accompanying any "applications for Letters of Registration of Inventions under the Act of "Council 16 Victoria, No. 24, together with the date of application for such "Letters of Registration, and when granted; also, copies of the Plans or "Sections annexed, and of the Report, in each case.

"(2.) That His Excellency will cause similar Returns to be laid before "Parliament annually."

(*Mr. Hart.*)

INDEX.

No.	Name of Applicant.	Date of Application.	Nature of Invention.	When granted.	Page.
				1880.	
789	Milo A. Richardson	29 Mar., 1879	Improvements in the mode of and apparatus for sharpening files and other tools.	8 January ...	1
790	William Montgomery Martin, assignee of Sigismund Wekey.	11 Dec., 1879	Improvements in the mode of generating gas for purposes of light and illumination, the said gas being also applicable as a source of heat and motive power.	8 January ...	5
792	John Walker	9 Dec., 1879	"The Alexandra Lubricant," together with a cup for the application of the same.	19 January ...	9
793	John Hollway.....	25 Nov., 1879	Improvements in the treatment of pyrites, and in the separation of metalliferous and other substances therefrom and thereby, and in the means employed therefor.	19 January ...	11
794	Nicolaus Joseph Galland and Henry Simon.	10 Dec., 1879	Improvements in malting, and in the apparatus employed for that purpose.	19 January ...	15
795	Charles Adolphus Watkins.	10 Dec., 1879	Improvements in the manufacture of brushes, and in the apparatus employed therein.	19 January ...	19
799	James Gardner	24 Sept., 1879	Process for party-coloured printing by single operation.	27 January ...	25
800	Henry Melvill Williams	22 Dec., 1879	Improved ventilators and chimney-tops	10 February...	27
801	William Skinner, assignee of John Vinecombe.	6 Jan., 1880	An improved portable elevating and tipping machine.	20 February...	29
802	Henry Joseph, John Matthew Muir, and Samuel Levy Bensusan.	31 Dec., 1879	Invention for the prevention of sickening of mercury and loss of gold during amalgamation of auriferous ores, blanketings, tailings, pyrites, &c., to be known as "Joseph, Muir, and Bensusan's improved amalgamating alkaline process."	20 February...	33
803	Herbert Maguire Whitehead.	31 Dec., 1879	Improvements in preserving meat in solid form, and in apparatus connected therewith.	20 February...	37
804	Thomas Alva Edison.....	30 Jan., 1880	Improvements in electric lamps, and in the method of manufacturing the same.	2 March.....	39
805	Gottlieb Wilhelm Daimler.	21 Jan., 1880	Improvements in gas motor engines	2 March.....	43
806	John Wintle.....	20 Jan., 1880	Improvements in washing-machines, styled "Wintle's Washing-machine."	2 March.....	47
807	George Baldwin Woodruff, Alexander Anderson, Spencer Mort, and George Browning.	6 Oct., 1879	Improvements in sewing-machines	4 March.....	49
808	William M'Intyre Cranston.	3 Feb., 1880	Improvements in apparatus for automatically binding cut crops into sheaves.	12 March.....	55
809	Russell Barton and George Hardie.	28 Jan., 1880	An improvement in the manufacture of hydraulic cement.	11 March.....	59
810	Peter Hevner	21 Jan., 1880	Improvements in railway systems	15 March.....	61
811	Alfred Buckingham Ibbotson and Frederick John Talbot.	5 Feb., 1880	Improvements in and relating to screw-bolts and their nuts, and other articles with screw-threaded holes, and in the manufacture of implements for punching these holes.	19 March.....	65
812	Norman Selfe	24 Feb., 1880	Improvements in the production of artificial cold.	2 April	69
813	Samuel Burston, assignee of Charles W. Boynton	6 Jan., 1880	Improvements in and relating to kilns for drying malt, grain, and other materials.	2 April	73
814	Arthur Selby	4 Mar., 1880	An improved gas-burner	6 April	77
815	William Humble and Ward Nicholson, assignees of James Ferrier, junior.	14 Feb., 1880	Improvements in binding apparatus for attachment to reaping-machines.	15 April	79
816	Zachariah Oram and Philip Brunner Grove.	18 Feb., 1880	Improvements in and relating to the construction of ships or vessels with twin propellers.	15 April	83

No.	Name of Applicant.	Date of Application.	Nature of Invention.	When granted.	Page.
				1880.	
817	Hugo Graepel	15 Jan., 1880	A machine for stripping wheat or other grain, driven by steam power, and to be styled "Graepel's Patent Steam-power Stripping Machine."	15 April	87
818	David Lindsay Waugh ...	21 Feb., 1880	Improvements in machinery for excavating and removing earth.	15 April	91
820	Christopher Tester.....	6 Mar., 1880	An improved automatic candle-extinguisher ..	21 April	95
821	Thomas Alva Edison.....	15 Mar., 1880	An improvement in electric lamps, and in the method of manufacturing the same.	21 April	97
822	Edmund Seymour Walter	23 Feb., 1880	Improvements in windmills	26 April	101
824	Joseph Stokes Williams	23 Feb., 1880	Improvements in railway crossings and switches, and in apparatus to be used in connection therewith.	5 May.....	103
825	Henry Yarwood Attrill and William Farmer.	31 Mar., 1880	Improvements in the manufacture of gas for heating and illuminating purposes, and in the means and apparatus connected therewith.	7 May.....	113
826	Charles Lewis	25 Mar., 1880	Improved steam cooking apparatus.....	11 May.....	121
827	Robert Charles Ransome	25 Mar., 1880	Improvements in machines for dressing grain ...	11 May..	123
828	David Strang, assignee of James Mentiplay.	9 April, 1880	Improvements in the process of and apparatus for roasting coffee, chicory, cocoa, and other like substances.	11 May.....	127
829	Victor Emile Etienne ...	15 Mar., 1880	Improvements in disinfecting and deodorizing apparatus for water-closets and other purposes.	11 May.....	129
831	John Warren and John Hogarth.	21 Jan., 1880	Improvements in apparatus for washing or scouring wool.	25 May.....	131
832	Thomas Welton Stanford and Samuel Milligan, assignees of Samuel Milligan and Olaf Spencer Wheeler.	9 Mar., 1880	Improvements in railway brakes.....	25 May.....	135
835	Thomas Leavitt	6 April, 1880	Improvements in machinery for post marking and for obliterating stamps on letters, post cards, and other articles.	28 May.....	137
836	David Johnson	14 April, 1880	Improvements in the manufacture of aerated and other beverages for restorative and medicinal purposes.	28 May.....	143
837	Louis Herrmann.....	14 April, 1880	Improvements in floors for malt kilns	28 May.....	147
838	Harry Mohun and James Cock.	29 April, 1880	Improvements in stump-extractors.....	15 June.....	151
839	Joseph Stokes Williams	15 Mar., 1880	Improvements in railway crossings and switches, and the means or apparatus for signalling upon or operating mechanism connected with lines of railway, and in the construction of posts or supports for carrying signals, and for other purposes.	15 June.....	155
840	Thomas Herbert.....	24 April, 1880	An improved scoop or excavator, to be called "Herbert's Improved Scoop or Excavator."	16 June.....	163
841	James Henry Needles ...	4 May, 1880	Apparatus for manufacturing illuminating gas from liquid hydro-carbon, commonly known as gasoline.	16 June.....	167
842	James Pellatt Rickman and Jacob Baynes Thompson.	12 May, 1880	An improved process and apparatus for the manufacture of ammonia and its compounds.	21 June.....	171
843	Thomas Alva Edison.....	6 May, 1880	Improvements in telephones.....	21 June.....	173
846	George Trotter Evans ...	14 May, 1880	Self-acting tramway points	25 June.....	177
847	John Ellis	25 May, 1880	Improvements in gas-burners	25 June...	179
848	Theodor Frederic Wiesener, assignee of John Alexander Lund.	6 Oct., 1879	An improved means or apparatus for synchronizing clocks or other time-keepers, and for transmitting seconds or other time or intermittent currents.	30 June.....	181
849	James Wavish.....	19 May, 1880	Improvements in or applicable to locomotive, marine, and other steam boilers, for the purpose of promoting the combustion of fuel and obtaining increased evaporating power.	30 June.....	185

No.	Name of Applicant.	Date of Application.	Nature of Invention.	When granted.	Page.
				1880.	
850	Cassius Clay Palmer	15 May, 1880	An improved method of producing refrigeration in ice-making and refrigerating machines, also an improved method and apparatus for freezing water on the plates of ice-making machines and for detaching it therefrom, including also an improved method and apparatus for cooling air, and a pipe-coupling for connecting pipes in ice-making and refrigerating machine.	30 June.....	189
851	James Howell Mears.....	19 May, 1880	An improved process for chlorinating ores.....	30 June.....	193
852	Orlo W. Richardson	15 May, 1880	Invention known as a carpet exhibitor	30 June.....	195
853	Raymond Cahuc.....	3 June, 1880	A new or improved blasting powder	9 July.....	197
854	Prosper Auguste Maignen and Jules Retif, junior.	16 June, 1880	Improvements in the method of and in the construction and arrangement of apparatus for filtering water and other liquids.	26 July.....	199
855	Francis Blake	16 June, 1880	Improvements in telephones.....	26 July.....	203
856	Henry Samwells.....	14 April, 1880	Improvements in the construction of a certain description of vehicle.	26 July.....	207
857	Thomas Alva Edison.....	14 June, 1880	Improvements in the utilization of electricity for light, heat, and power; being an improved system and means for the generation, measurement, and translation of electricity into light, heat, or power.	26 July.....	211
858	Thomas Alva Edison.....	16 June, 1880	An improvement in electric lamps, and in the method of manufacturing the same.	26 July.....	217
859	Christian Heinrich Friedrich Schneemanns, John Christian Hermann Baass, and Carl Heinrich Florens Müller.	9 June, 1880	Improvements in the means of and in apparatus for preserving meat and other articles of consumption.	26 July.....	223
861	James M'Govern	22 June, 1880	An improved drying and pulverizing apparatus	4 August ...	227
862	James Knox Newton.....	30 June, 1880	An improvement in the manufacture of a lubricant and cup to be called "The Eureka Lubricating Compound Company's Lubricant and Cup."	13 August ...	229
863	Edwin Robins Thomas and George Cowdery.	28 May, 1880	An automatic coupling and uncoupling apparatus for railway and other rolling-stock.	13 August ...	231
864	James Andrew Penson ...	17 June, 1880	An improved sunlight reflector.....	13 August ..	235
865	Thomas Foster Wilkins ..	30 June, 1880	A novel process for the preservation of butter...	13 August ...	237
867	John Fisher.....	13 July, 1880	Improvements in apparatus for husking and cleaning rice or other grain, and for pulverizing and mixing mortar, cement, or other materials.	25 August ...	239
868	Arthur Isaac Maxfield and Frederick Styman.	23 April, 1880	Apparatus for the production of an illuminating and heating gas from light hydro-carbon spirits or other like materials.	25 August ...	243
869	Charles O'Neill	30 June, 1880	O'Neill's patent Caithness concrete flagging	25 August ...	247
874	James Taylor	8 July, 1880	Improvements in linings for wells	7 September	249
875	Thomas Alva Edison.....	7 July, 1880	Improvements in methods and appliances for telephonic communication.	16 September	251
876	George Weichmann	14 Aug., 1880	An improved self-heating and revolving smoothing-iron, to be called the "Excelsior self-heating and revolving smoothing-iron."	22 September	257
880	Andrew Smith Hallidie...	5 July, 1880	Improvements in propelling, hauling, and operating cars on tracks, and propelling other vehicles and boats, and in the machinery and apparatus connected therewith.	19 October ...	261
881	The Anglo-American Electric Light Company (Limited), Assignee of Charles F. Brush.	30 June, 1880	Improvements in electric lighting, and in apparatus therefor.	19 October ...	269
882	Henry Barrett.....	16 June, 1880	Improvements in bottles and stoppers, and in apparatus for filling or charging the same.	19 October ...	283
883	Arthur Hope	27 Aug., 1880	An improvement in stone-breaking machines ...	19 October ...	287
884	Ole O. Storle	2 Sept., 1880	Improvements in knot-tyers for grain-binders...	19 October ...	289

No.	Name of Applicant.	Date of Application.	Nature of Invention.	When granted.	Page.
				1880.	
885	John M'Nevin, assignee of William Whitton Davis.	21 Aug., 1880	Invention for excavating and depositing earth...	19 October ...	293
886	Alexander Barclay Farquhar and William Galpin Lock.	27 Aug., 1880	A method of easily transporting goods, wares, and materials on rails or trams, to be called "Lock's Radial Point and Improved Carrier Hook and Roller."	19 October ...	297
887	Norman Selfe	21 Aug., 1880	The production of artificial cold	19 October ...	301
888	Kennard Knott	27 Feb., 1880	Improvements in refrigerating cars for the transportation of meat and other perishable articles.	19 October ...	307
892	David Smith	17 Aug., 1880	Improvements in railway rails and tramway rails, and a new mode of repairing the same.	6 December..	311
893	John Berger Spence	27 Sept., 1880	Certain improvements in the manufacture of metallic compounds, and in the application of such compounds to various purposes.	6 December..	315
894	Quentin Leon Brin.....	5 Oct., 1880	Improvements in the production of light and heat, and apparatus for same.	6 December..	317
895	Heinrich Trenk, Jean Ballatschano, and Constantin Ballatschano.	25 Aug., 1880	Improved processes and compositions for the tanning and condensing of hides or skins.	6 December..	321
896	Alexander William Winter and William Tell Coleman.	27 Oct., 1880	An improvement in bleaching, refining, and purifying fats and oils.	9 December..	325
897	George Fletcher and John Smethurst Fletcher.	6 Oct., 1880	Improvements in Exeter cooking-stoves	9 December..	329
898	William Rasche	13 Oct., 1880	Improvements in Rasche's Patent Direct-acting Battery for quartz-crushing, &c.	9 December..	331
899	Alexander Morrison Fell	7 Sept., 1880	Improved corn husker and sheller	17 December..	335
900	Dan Rylands	3 Nov., 1880	Improvements in means for stopping bottles or other hollow articles.	29 December..	337

A.D. 1880, *8th January.* No. 789.

IMPROVEMENTS IN SHARPENING FILES AND OTHER TOOLS.

LETTERS OF REGISTRATION to Milo A. Richardson, for Improvements in the mode of and apparatus for sharpening Files and other Tools.

[Registered on the 9th day of January, 1880, in pursuance of the Act 16 Vic. No. 24.]

BY His Excellency the Right Honorable Sir Augustus William Frederick Spencer Loftus (commonly called Lord Augustus Loftus), Knight Grand Cross of the Most Honorable Order of the Bath, a Member of Her Majesty's Most Honorable Privy Council, Governor and Commander-in-Chief of the Colony of New South Wales and its Dependencies.

TO ALL TO WHOM THESE PRESENTS SHALL COME, greeting:

WHEREAS Milo A. Richardson, of Bridgeport, in the State of Connecticut, United States of America, hath by his Petition humbly represented to me that he is the author or designer of a certain invention or improvement in manufactures, that is to say, of an invention of "Improvements in the mode of and apparatus for sharpening Files and other Tools," which is more particularly described in the specification, marked A, and the two sheets of drawings, marked B and C respectively, which are hereunto annexed; and that he, the said Petitioner, hath deposited with the Honorable the Treasurer of the said Colony of New South Wales the sum of Twenty Pounds sterling, for defraying the expense of granting these Letters of Registration, as required by the Act of Council, sixteenth Victoria, number twenty-four; and hath humbly prayed that I would be pleased to grant Letters of Registration, whereby the exclusive enjoyment and advantage of the said invention or improvement might be secured to him for a period of fourteen years: And I, being willing to give encouragement to all inventions and improvements in the arts or manufactures which may be for the public good, and having received a report favourable to the prayer of the said Petition, from competent persons appointed by me to examine and consider the matters stated therein and to report thereon for my information, am pleased, with the advice of the Executive Council, and in exercise of the power and authority given to me by the said Act of Council, to grant, and do by these Letters of Registration grant unto the said Milo A. Richardson, his executors, administrators, and assigns, the exclusive enjoyment and advantage of the said invention or improvement, for and during the term of fourteen years from the date hereof; to have, hold, and exercise unto the said Milo A. Richardson, his executors, administrators, and assigns, the exclusive enjoyment and advantage thereof, for and during and unto the full end and term of fourteen years from the date of these presents next and immediately ensuing, and fully to be complete and ended: Provided always, that if the said Milo A. Richardson shall not, within three days after the granting of these Letters of Registration, register the same in the proper office in the Supreme Court, at Sydney, in the said Colony of New South Wales, then these Letters of Registration, and all advantages whatsoever hereby granted, shall cease and become void.

In witness whereof, I have hereunto set my sign manual, and have caused the present Letters of Registration to be sealed with the seal of the said Colony of New South Wales, at Government House, Sydney, in New South Wales, this eighth day of January, in the year of our Lord one thousand eight hundred and eighty.

[L.S.] AUGUSTUS LOFTUS.

A.D. 1880. No. 789.

Improvements in sharpening Files and other Tools.

A.

TO ALL TO WHOM THESE PRESENTS SHALL COME, I, MILO A. RICHARDSON, of Bridgeport, in the State of Connecticut, United States of America, send greeting :

WHEREAS I am desirous of obtaining Letters of Registration under the sign manual and seal of the Colony of New South Wales, for the exclusive enjoyment and advantage for a period of fourteen years, of an invention for "Improvements in the mode of and apparatus for sharpening Files and other Tools," of which I am the first and true inventor : Now know ye that the nature of the said invention, and the manner in which the same is to be performed, is particularly described and ascertained in and by the following statement, that is to say :—

The sharpening of rasps, files, and similar tools, having a number of fine cutting teeth, edges, or points, has hitherto been practically impossible, and the tools when blunted have been thrown aside as useless, thus causing in large workshops considerable loss, not only of material, but money ; or the tools have been re-cut, an operation of a somewhat costly nature.

Now the object of this invention is to obviate the difficulties hitherto experienced in sharpening this class of tools, and to avoid the waste of material and means. This is effected by taking advantage of the cutting property of a stream of sand or its equivalent, when propelled by a jet of steam or other suitable means. This cutting agent is now well known as the "sand blast," and the methods of producing the "sand blast" have been described in many published works.

In carrying out this invention the "sand blast" is directed against the back or tang side of the teeth of the file or rasp, the effect being to grind away some of the metal from the back of the teeth, and thus reproduce a sharp edge or point. In order to obtain the proper effect it is essential that the sand should be directed at an angle from the tang end towards the point of the file. It has been found that an angle of from 10 to 15 degrees from the plane of the file face gives good results for files which are to be used on gun-metal, but an angle of about 25 degrees is found better suited for files intended for general purposes.

The time required for the operation of sharpening the file teeth will vary according to the power of the sand blast employed and the quantity of metal to be removed, but in general may be set down at from one minute to a minute and a half.

The sharpening process may be repeated many times, until the teeth are nearly worn away.

Emery or similar cutting substances may be used instead of sand, but the degree of fineness of the material employed will depend upon the nature of the work to be done, thus the finer the teeth the finer must be the cutting material.

It has been found also that new files are made sharper and more durable by submitting them to this process. This appears to be due to the fact that teeth of new files have a curl or burr which is apt to break off in use, leaving the points jagged. By submitting the new files to the sand blast this burr or curl is ground away, and the points are converted into something like a chisel-shaped edge.

In addition to files and rasps, it is proposed to sharpen, by means of the sand blast, saws, milling tools, circular files or cutters, reamers, and metallic mills, the same being presented to the action of the blast in such manner that the back only of the cutting edges or teeth will be acted upon by the sand, as before explained.

Edge tools and other cutting instruments may be sharpened by the sand blast directed from the back towards the edge, at a suitable angle ; it should, however, be stated that there would probably be but little advantage in applying the invention to tools which may be readily sharpened with a grindstone or emery wheel ; but for cutting edges of irregular shapes, which it is difficult to sharpen by ordinary grinding, the present invention may be beneficially applied, the sand blast being directed as before described, and the tool being manipulated so as to present the back of the cutting edge to the action of the blast at a suitable angle.

In the accompanying drawings I have shown several arrangements of apparatus for working my invention. Figure 1 shows the apparatus as used when working with dry sand. The steam at a pressure of about 60 lbs. to the square inch is supplied through the pipe *a* to the steam space *a'*, whence it passes through an annular aperture of $\frac{3}{16}$ inch diameter to the nozzle *b* (which may be 6 inches long, with a $\frac{2}{16}$ inch bore), thus causing a vacuum in a pipe *c* of (say) $\frac{3}{16}$ inch bore, which is connected by a flexible tube with a funnel, *d*, kept supplied with sand. The effect of this vacuum is to draw a current of air and the sand from the funnel *d* into the nozzle *b*, whence it is projected with great force by the steam on to the object to be acted upon.

The flexible tube connecting the sand pipe *c* with the sand funnel *d* should be so arranged that it may be easily put on and off to allow of the apparatus being heated by the steam before commencing work, otherwise a condensation of steam would take place, and the sand by becoming wetted would clog the tubes.

It has been found that when working with very fine sand it is more convenient to use it mixed with water in the state of fluid, and thin enough to flow by suction through the sand pipe rather than in the dry state. An incidental advantage of using it in this state is that it may be reused immediately by collecting and causing it to run back into a receiver, whence it is again sucked up into the sand tube, and thus used repeatedly until it becomes so fine that it has little or no cutting power.

When this fluid mud is used, its movement under the suction produced is so sluggish that a tube of a size sufficient to supply dry sand will not supply the requisite quantity of fluid mud, and it is inconvenient in other respects to increase the size of this tube. It is found, however, that by supplying the steam in the centre of the blast pipe and the fluid mud on the outside, as shown in figure 2, this difficulty is obviated, and in this way a larger proportion of sand to steam can be used, and the sharpening action of the sand blast is increased. The central stream jet may have a bore of $\frac{5}{16}$ inch, and the nozzle tube may be 6 inches long, with a bore of $\frac{9}{16}$ inch. In both of the above-described blast pipes a round stream of sand is produced, and it has been found that when such a stream strikes obliquely upon a flat surface, one part of it in rebounding passes through the other part and tends to some extent to divert the latter, and thus interferes with its useful effect.

It has also been found necessary, in order that the sand may act evenly upon the surface of a wide file, to move the file laterally, as well as lengthwise, under the blast; this is difficult to do with regularity, and in practice there is a tendency to grind the file more in the middle than at the sides, and to produce a hollow or concave surface which does not work well. For the purpose, therefore, of sharpening files and similar tools, it is desirable to use a sand blast which is wide in the direction of the width of the file and thin in the direction of the length of the file, and in this way the whole width of a file can be acted upon simultaneously and in a more equal manner, and without the necessity of any lateral motion, and also without the interfering action above referred to.

In figs. 3, 4, 4*a*, and 5, I have shown my improved arrangement of blast pipe and nozzle; fig. 3 being a vertical section, fig. 4 a sectional plan view, fig. 4*a* a cross section of the nozzle tube, and fig. 5 a cross section taken in the line *x x* of fig. 3, the same letters referring to similar parts.

a is a casting of gun-metal forming a steam chamber, and is provided with a screw-thread, whereby it may be screwed on to a steam supply pipe; *b* is a second casting of gun-metal, which is secured by screws to *a*, the joint being made tight by solder or otherwise. In *b* are bored steam holes, *c c*, about one-fourth of an inch apart from centre to centre, and about sixteen one-hundreths ($\frac{16}{100}$) of an inch in diameter at their front or small end, and continuing at this diameter backward for about one-sixth of an inch, and then widening conically until their edges meet.

The central lines of these steam holes should be parallel to the central line of the screw *y*.

The projecting part *d* of the piece *b* has its upper surface made parallel with the axes of the holes *c c*. *g g* is the nozzle tube, made preferably of white cast-iron and in halves, which when put together form a flat tube about $2\frac{1}{2}$ inches long, and having the cross section of about three-sixteenths ($\frac{3}{16}$) of an inch high, and about one quarter of an inch wider than the row of steam holes. The nozzle tube *g g* is held together, and is also fastened to the piece *b d* by the clamp *i*. When necessary, packing pieces of thin metal or paper may be inserted between the nozzle tube and the piece *d*, so as to ensure that the central plane of the nozzle tube shall coincide with the central lines of the steam holes *c c*.

This adjustment is important, for if the nozzle is not accurately placed the sand blast will strike too much upon one side of the nozzle tube, and will soon cut it away. As the nozzle tube is the part of the apparatus which wears out most rapidly and requires continual replacement, it is essential that it should be readily renewable, and this desideratum is obtained by forming the nozzle of white cast-iron in two or more parts.

In order to admit the supply of fluid mud, the lower half of the nozzle tube is cut away for about one-eighth of an inch at its inner end *e*, and a corresponding aperture, *v*, is made in the piece *d*, so as to communicate with the cross tube *o*. The vertical pipe *f*, which descends to the bottom of a conical mud vessel *p*, sheet II, has a horizontal branch which is inserted in the cross tube *o*, and this is provided with a long slit on its underside through which the mud enters the tube *o*. By thus arranging the slit the flow of the sand is distributed. The metal of the piece *b d* is also sloped off below the row of steam holes, so as to facilitate the entrance of the fluid mud from the tube *o* into the nozzle tube. All the joints between and around the nozzle tube are made air-tight with red lead or putty. By this arrangement of a number of small holes placed in a row side by side, the fluid mud is drawn by the suction between and around the separate jets of steam, all of which blow into the same nozzle tube, and becomes well mixed up with the steam while in the nozzle tube, and thus produces a more uniform sand blast, which has little or no tendency to make the surface of the file concave or hollow.

Fig. 6, sheet II, shows in elevation, and fig. 7 in plan view, the mode of mounting the apparatus for use. *s*, fig. 7, is the settling chamber in which the fluid mud is collected after being used; it consists of a wooden box about 6 feet cube, having a water-tight bottom which slopes towards the front and also towards a gutter in its centre. *t* is the working hole, about 4 inches long, by $2\frac{1}{2}$ inches high, in the front of the chamber *s*.

In these figures two blast pipes are shown, one above the other, below the file to be treated. It will be seen that the nozzles are considerably wider than the files treated, and are so arranged that the upper one inclines downwards (say about 25 degrees from the horizontal), and to one side (say to the left) about 11 degrees from the longitudinal axis of the file, while the lower one inclines upward and to the other side (say to the right) at similar angles. The file is moved horizontally lengthwise between them, so as to present its opposite sides at equal angles to the two sand blasts.

In this way all the four sides of a flat or square file may be sharpened simultaneously.

The vertical distance between the ends of the nozzle tubes will depend on the thickness of the files treated, but for files of about $\frac{3}{8}$ of an inch thick, about one inch and a half from centre to centre of the ends of the nozzle tubes, as shown in fig. 6, will be found convenient. The horizontal distance from centre to centre of the ends of the nozzle tubes as shown in fig. 7 may be about $1\frac{1}{8}$ inch.

As files of different fineness of teeth and different degrees of dullness ought to receive corresponding degrees of grinding, it is desirable that the workman should possess some means of ascertaining at each instant of the operation the effect produced on the file and the condition of every part of its surface.

For this purpose a bar of metal, *h*, fig. 6 (generally gun-metal), which will be called the "feeler," is secured to one of the blast pipes in such a manner that, as the workman moves the file under the blast, he can keep it slightly pressed against the feeler. While the file is dull it slides easily over the feeler, but as the sharpening progresses the workman will find that it will begin to bite, and he can thus test its whole length and each side, and judge when it is sufficiently sharpened. As the end of the feeler *h* is cut away by the rubbing of the file, the feeler *h* is pushed forward. A lateral guide, *w* (fig. 7), may also be secured to the front of the chamber *s*. This lateral guide may consist of a piece of smooth, hard steel bar.

For good working it is desirable that the fluid mud should have a uniform consistency. In an ordinary tub or box the tendency of the solid matter to settle to the bottom is apt to cause irregularity unless the mixture is frequently stirred. To prevent this irregularity and obviate the necessity for frequent stirring, the mud vessel is made in the shape of an inverted cone, and the supply of mud is drawn from the point.

As the horizontal area of this vessel decreases towards the bottom, the current is proportionately more rapid, and it is found that the supply is thus made more regular, and the suction tubes are less apt to become choked.

The

Improvements in sharpening Files and other Tools.

The two converging blast pipes *a a* drive the steam and mud through the hole *t* into the settling chamber S, where the mud and water fall to the bottom and return by the gutter to the conical mud vessel *p*, from which it is again sucked up by the tubes *f f* into the blast pipes and re-used; the waste steam and air escaping to a chimney in connection with the settling chamber S.

The sand used in the state of fluid mud to feed the blast pipes is about as fine as flour emery. In order to make up for waste, a supply of sand, fine enough to pass through a sieve of 120 wires to an inch, is put into a hopper at the back of the chamber S, and is gradually washed down into the mud vessel.

The conical mud vessel *p* may be made of sheet metal about 2 feet high and 2 feet in diameter at the top. A sieve is suspended at the top of the vessel to catch any dirt, and also to break up the stream of mud as it runs from the chamber S. The mud vessel *p* is provided with suitable overflow pipes, so that the excess of water carrying with it some of the finest mud will run off into another receptacle, where the solid matter will be allowed to settle. Before being exposed to the sand blast, it is desirable that the files should be cleaned by boiling in caustic alkali, and any pins or chokes of metal between the teeth should be removed.

Beyond a certain degree of fineness the sand does not cut so rapidly, though in time it will produce a smooth and keen edge; coarse sand cuts rapidly, but makes a more rough and blunt edge. The mud in vessel *p* is provided with suitable overflow pipes, so that the excess of water carrying with it some of the finest mud will run off into another receptacle, where the solid matter will be allowed to settle.

In the foregoing specification, certain forms, dimensions, angles, and distances of the apparatus have been mentioned because they have been found to give good results, but it is not intended to confine the invention thereto, as they may be varied without changing the substantial character of the invention.

Having now described my invention and explained the manner of carrying the same into effect, I wish it to be understood that I claim—

First—The use of a stream of sand, or an equivalent cutting material, set in motion preferably by a jet of steam, and directed at an angle more or less acute on to the surface to be operated upon, for the purpose of sharpening files, rasps, and other tools, as herein set forth.

Second—The arrangement of apparatus, as herein shown and described, for effecting the object of the said invention.

I claim particularly the following points, viz.:—

(*a*) One or more interior steam jets, combined with an exterior apply of fluid mud or fine sand mixed with water.
(*b*) A wide and thin sand blast, the steam entering by either one or more of these apertures, or by a row of small holes having intervals between them.
(*c*) The "feeler" to test the progress of the sharpening during the operation.
(*d*) The conical mud vessel, from the small end of which the fluid mud is drawn.
(*e*) A sand blast directed at an angle to the length of the file, so as to act simultaneously on two adjacent sides.
(*f*) Nozzle tubes made of two or more pieces of cast iron or steel.

In witness whereof, I, the said Milo A. Richardson, have hereunto set my hand and seal, the twenty- ninth day of March, in the year of our Lord 1879.

MILO A. RICHARDSON.

Witnesses—
ANSON H. LANDON.
ROBT. E. PARSONS.

This is the specification, marked A, referred to in the annexed Letters of Registration granted to Milo A. Richardson, this eighth day of January, A.D. 1880.

AUGUSTUS LOFTUS.

REPORT.

Sir, Sydney, 8 December, 1879.

We do ourselves the honor to state that we are of opinion that Letters of Registration may be granted in favour of Milo A. Richardson, for his invention of "Improvements in the mode of and apparatus for sharpening Files and other Tools," in accordance with his Petition, specification, drawings, and claim, transmitted for our report under your blank cover communication of the 2nd instant, No. 9,472.

We have, &c.,
GOTHER K. MANN.
JAMES BARNET.

The Principal Under Secretary.

[Drawings—two sheets.]

"B"

[789]

Sheet 1.

Fig. 3.

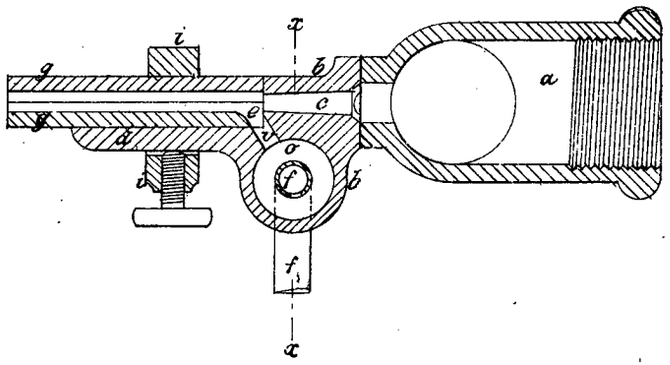

Fig. 5.

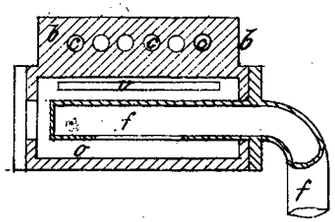

Fig. 2.

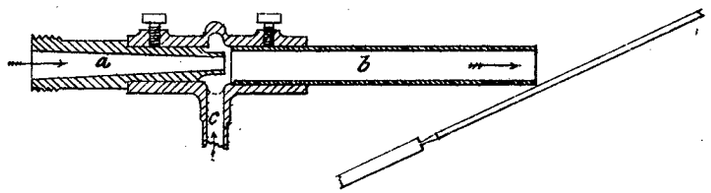

Fig. 4.

Fig. 1a.

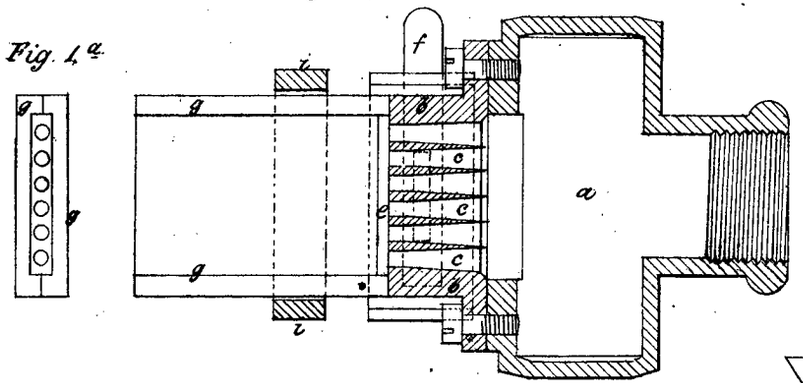

Fig. 1.

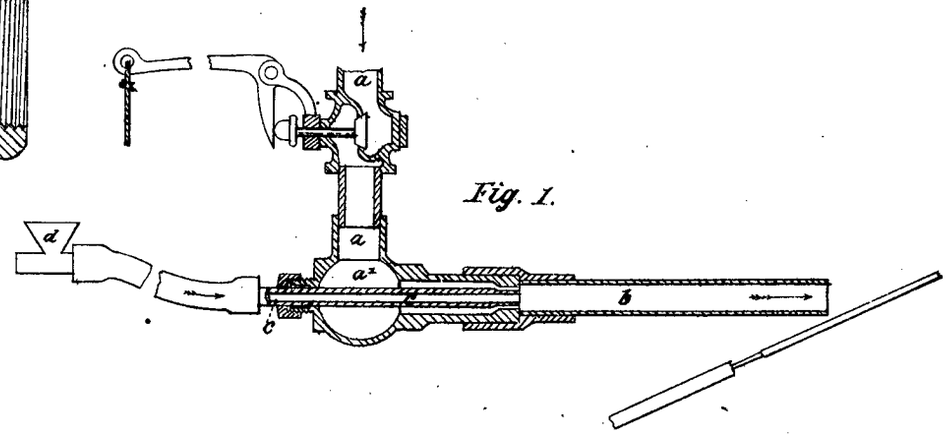

(Sig. 357-) This is the Sheet of Drawings marked B referred to in the annexed Letters of Registration granted to Milo A—Richardson this eighth day of January, A.D., 1880.

Augustus Loftus.

PHOTO-LITHOGRAPHED AT THE GOVT PRINTING OFFICE SYDNEY NEW SOUTH WALES.

"C"

[789]

Sheet II.

C

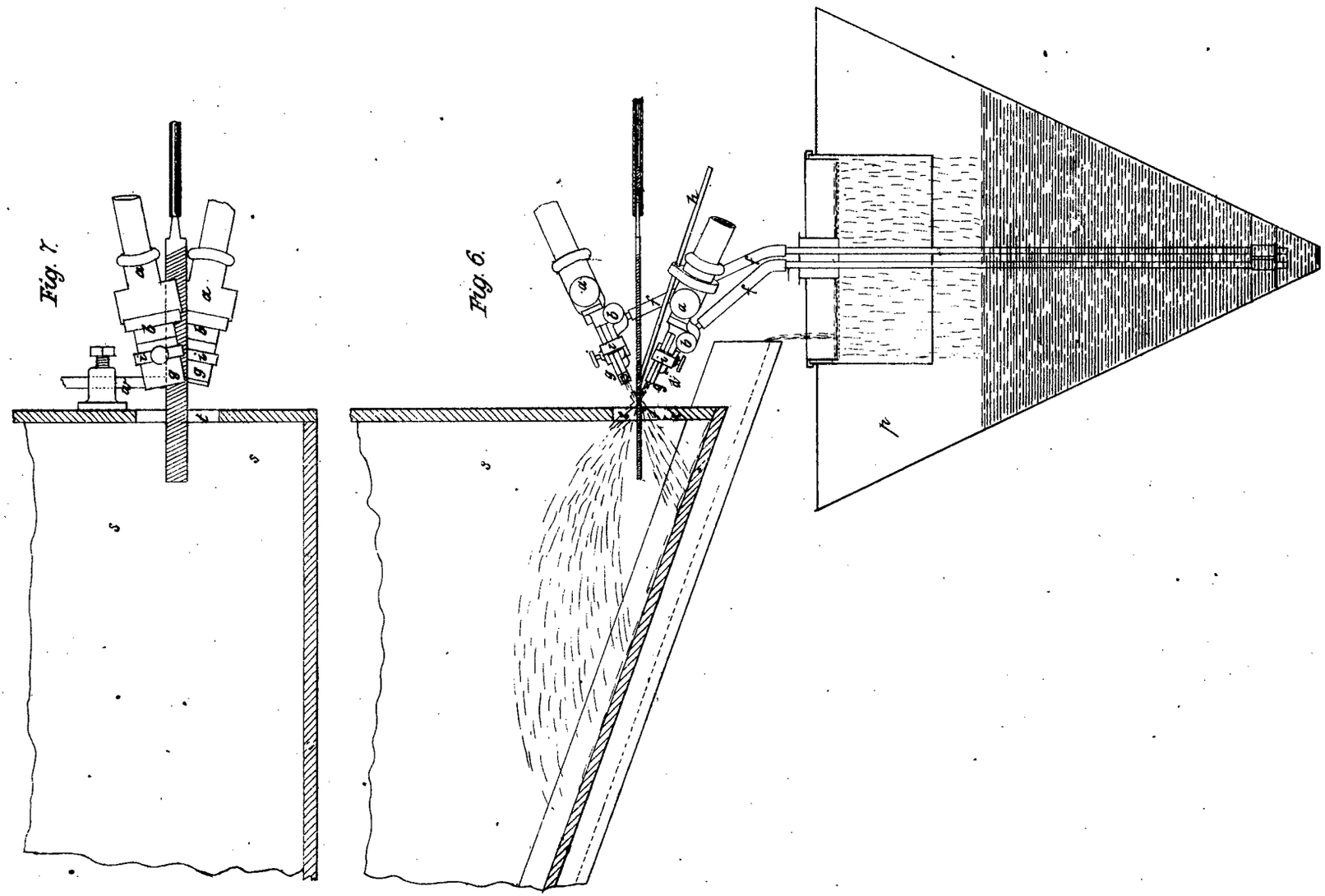

(Sig. 367)

This is the Sheet of Drawings marked C referred to in the annexed Letters of Registration granted to Milo A - — Richardson, this eighth day of January, A.D., 1880.

Augustus Loftus.

PHOTO-LITHOGRAPHED AT THE GOVT. PRINTING OFFICE, SYDNEY, NEW SOUTH WALES.

A.D. 1880, 8*th January.* No. 790.

AIROLINE GAS APPARATUS.

LETTERS OF REGISTRATION to William Montgomery Martin, for Improvements in the mode of generating Gas for the purposes of light and illumination.

[Registered on the 9th day of January, 1880, in pursuance of the Act 16 Vic. No. 24.]

BY His Excellency the Right Honorable Sir Augustus William Frederick Spencer Loftus (commonly called Lord Augustus Loftus), Knight Grand Cross of the Most Honorable Order of the Bath, a Member of Her Majesty's Most Honorable Privy Council, Governor and Commander-in-Chief of the Colony of New South Wales and its Dependencies.

TO ALL TO WHOM THESE PRESENTS SHALL COME, greeting:

WHEREAS William Montgomery Martin, of Sydney, in the Colony of New South Wales, merchant, hath by his Petition humbly represented to me that he is the assignee of Sigismund Wekey, of 325, Strand, London, England, who is the author or designer of a certain invention or improvement in manufactures, that is to say, of an invention for "Improvements in the mode of generating Gas for the purposes of light and illumination—the said Gas being also applicable as a source of heat and motive power," which is more particularly described in the specification and the sheet of drawings which are hereunto annexed; and that he, the said Petitioner, hath deposited with the Honorable the Treasurer of the said Colony of New South Wales the sum of Twenty Pounds sterling, for defraying the expense of granting these Letters of Registration, as required by the Act of Council, sixteenth Victoria, number twenty-four; and hath humbly prayed that I would be pleased to grant Letters of Registration, whereby the exclusive enjoyment and advantage of the said invention or improvement might be secured to him for a period of fourteen years: And I, being willing to give encouragement to all inventions and improvements in the arts or manufactures which may be for the public good, and having received a report favourable to the prayer of the said Petition, from competent persons appointed by me to examine and consider the matters stated therein and to report thereon for my information, am pleased, with the advice of the Executive Council, and in exercise of the power and authority given to me by the said Act of Council, to grant, and do by these Letters of Registration grant unto the said William Montgomery Martin, his executors, administrators, and assigns, the exclusive enjoyment and advantage of the said invention or improvement, for and during the term of fourteen years from the date hereof; to have, hold, and exercise unto the said William Montgomery Martin, his executors, administrators, and assigns, the exclusive enjoyment and advantage thereof, for and during and unto the full end and term of fourteen years from the date of these presents next and immediately ensuing, and fully to be complete and ended: Provided always that if the said William Montgomery Martin shall not, within three days after the granting of these Letters of Registration, register the same in the proper office in the Supreme Court, at Sydney, in the said Colony of New South Wales, then these Letters of Registration, and all advantages whatsoever hereby granted, shall cease and become void.

In witness whereof, I have hereunto set my sign manual, and have caused the present Letters of Registration to be sealed with the seal of the said Colony of New South Wales, at Government House, Sydney, in New South Wales, this eighth day of January, in the year of our Lord one thousand eight hundred and eighty.

[L.S.] AUGUSTUS LOFTUS.

SPECIFICATION

Airoline Gas Apparatus.

SPECIFICATION of Airoline Gas Apparatus.

AN invention for improvements in the mode of generating gas for the purposes of light and illumination, the said gas being also applicable as a source of heat and motive power.

This invention relates to the mode of generating gas by means of a self-acting apparatus, which requires no motive power or machinery, or gasometer for holding or storing the gas after having been generated, and before being used for illuminating or other purposes.

In order to realize the above invention, I purpose to use, preferably, an oblong shallow vessel, A, made of zinc or other suitable material, the capacity of which is to be proportionate to the amount of gas required for consumption.

By preference in the left-hand corner of this vessel, I purpose to place a funnel, B, open at the top and bottom, and reaching almost to the bottom of the vessel aforesaid; the lower part of it to be less in diameter than the upper part.

In this funnel I purpose to insert a bottle, C, made of zinc, glass, or other suitable material, corresponding in shape to the funnel already described. The top of the bottle to be closed air-tight, and the bottom of it terminating in a narrow mouth fitted with a self-acting valve, the mouth reaching almost to the bottom of the said oblong shallow vessel.

Near to, and round the neck of this bottle, an india-rubber collar may be fitted to insure it fitting air-tight into the funnel when inserted.

The relative proportion as to the size of this bottle for holding gas, air, liquids, or solids to be about one-fourteenth of the size or capacity of the aforesaid oblong shallow vessel, of which it will form a part when inserted, to ensure the perfect automatic working of the apparatus.

The retention of the above actual proportions is not absolutely necessary for working the apparatus.

At the left-hand end of the apparatus a trap screw, D, is fitted for the purpose of draining it or gaining access to the cylinders.

On top and at the same end of the oblong vessel an air tube, E, is fitted, bent slightly at the upper end, and terminating in a bell-shaped mouth, for the ingress of air into the said oblong shallow vessel.

At the right-hand end of the said vessel a tap or taps with union coupling, F, is fitted; to this tap or taps are fitted tubes of lead, tin, composition, india-rubber, or any other suitable material of any required length, for the conveyance of the gas when generated in the apparatus.

Inside the aforesaid oblong shallow vessel are placed four or more tubes or cylinders (A in drawing No. 2), made of perforated zinc or other suitable material, less in length and depth than the vessel itself, and covered excepting at the ends with flannel or other fibrous material; the said cylinders to be filled with coarse camphor.

After the trap screw is closed, the air tube fitted and the piping connected with a burner, the bottle aforesaid is filled with gasoline or other volatile oils, spirits, or essences, and fitted tightly into the funnel aforesaid, and then the airoline gas apparatus is ready for immediate use in supplying gas in proportion to the required consumption and the supply of material from which it is generated.

The apparatus is also adapted for the refinement and enrichment of any other gas. A supply pipe can be led into the apparatus fitted with a stop-cock, so as to regulate the supply of gas being used either separately or mixed.

The apparatus should be placed in the highest part of a building, on a level shelf, sheltered from wind or rain.

The gas supply may be led throughout the various rooms of a building by gravitation, or forced upwards through a self-acting gasometer.

The whole apparatus may be protected from accident or temperature by being boxed into an outer air-tight shell, leaving only the mouth of the air-tube free.

After the pipes have once been filled with gas, the operation of generating and supplying it by this apparatus will be absolutely self-acting, the bottle alone requiring recharging when its contents are exhausted. This may be done as the consumption requires.

The camphor supply will last for months, and can be renewed at will.

The gas is odourless, innocuous, and has a far higher power of illumination and heat than the best coal gas.

The cost of it is far below that of any artificial light whatever.

There is no waste of gas by this apparatus, as the gas only generates by combustion, for if the air is cut off no gas can generate.

It may be used through any kind of pipe or burner, and can be fitted in a few minutes to any gas-fittings now in use at a cost of a few shillings, and is equally applicable for supplying a city, public building, ship, house, or private room,

As assignee for Sigismund Wekey, inventor, of 325, Strand, London, England (assignment attached hereto in duplicate), I claim every part of the apparatus and the mode of using the materials as my sole invention.

WILLIAM MONTGOMERY MARTIN,
New South Wales (and Victoria),
Assignee of Sigismund Wekey, 325, Strand, E.C., London, England.

Dated at Sydney, in the Colony of New South Wales, Australia, this eleventh day of December, in the year of our Lord one thousand eight hundred and seventy-nine.

This is the specification referred to in the annexed Letters of Registration granted to William Montgomery Martin, this eighth day of January, A.D. 1880.

AUGUSTUS LOFTUS.

REPORT.

Airoline Gas Apparatus.

REPORT.

Sir, Sydney, 13 December, 1879.

The application of Mr. W. M. Martin, assignee of Mr. Sigismund Wekey, for Letters of Registration for "Improvements in the mode of generating Gas for the purpose of illumination," having been referred to us, we have examined the specification and drawings accompanying the same, and have now the honor to report that we see no objection to the issue of Letters of Registration as prayed for.

We have, &c.,
J. SMITH.
CHAS. WATT.

The Principal Under Secretary.

[Drawings—one sheet.]

No. 791.

[Assignment of No. 652. See Letters of Registration for 1878, page 1.]

No 1.

PLAN

OF

AIROLINE GAS APPARATUS

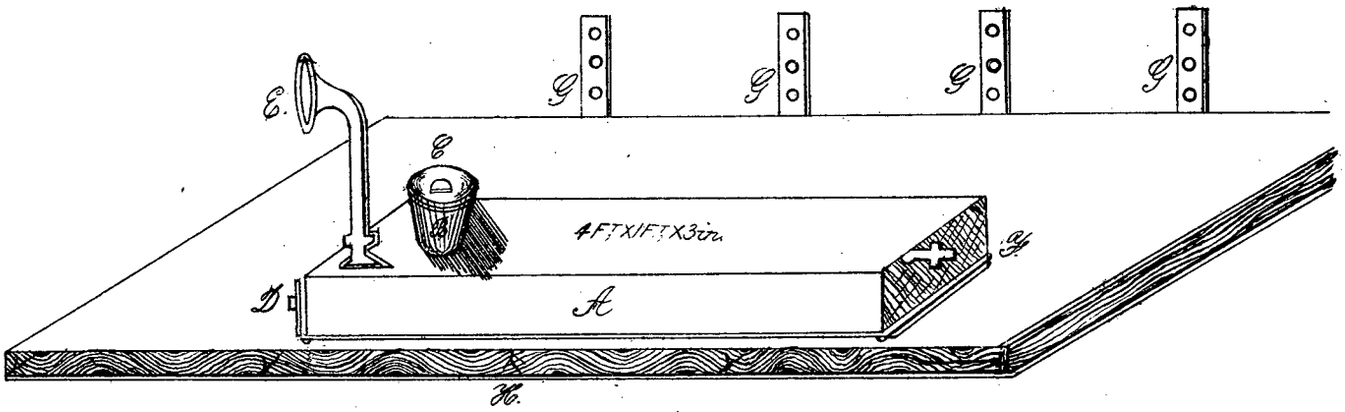

A. Oblong shallow vessel
B. Funnel
C. Bottle
D. Grap-screw
E. Airtube
F. Gas Coupling
G. Wall brackets
H. Shelf

No 2.

INTERIOR

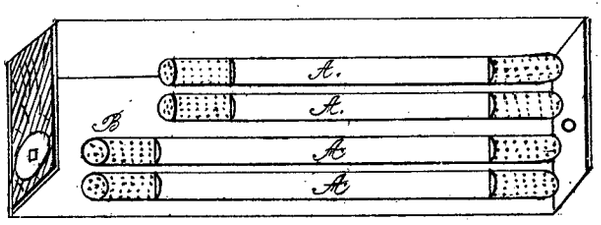

A. Cylinders with camphor
B. Bottom inside

A. Bottle for Oil.

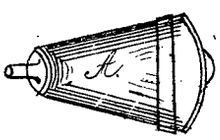

William Montgomery Martin.

This is the Sheet of Drawings referred to in the annexed Letters of Registration, granted to William Montgomery Martin, this eighth day of January, A.D. 1880.

Augustus Loftus.

(Sig. 357-)

A.D. 1880, 19*th January.* No. 792.

THE ALEXANDRA LUBRICANT.

LETTERS OF REGISTRATION to John Walker, for an Invention styled "The Alexandra Lubricant," together with a Cup for the application of the same.

[Registered on the 20th day of January, 1880, in pursuance of the Act 16 Vic. No. 24.]

BY His Excellency the Right Honorable Sir Augustus William Frederick Spencer Loftus (commonly called Lord Augustus Loftus), Knight Grand Cross of the Most Honorable Order of the Bath, a Member of Her Majesty's Most Honorable Privy Council, Governor and Commander-in-Chief of the Colony of New South Wales and its Dependencies.

TO ALL TO WHOM THESE PRESENTS SHALL COME, greeting:

WHEREAS John Walker, of Sydney, in the Colony of New South Wales, engineer, hath by his Petition humbly represented to me that he is the author or designer of a certain invention or improvement in manufactures, that is to say, of an invention styled "The Alexandra Lubricant, together with a Cup for the application of the same," which is more particularly described in the specification and the drawing which are hereunto annexed; and that he, the said Petitioner, hath deposited with the Honorable the Treasurer of the said Colony of New South Wales the sum of Twenty Pounds sterling, for defraying the expense of granting these Letters of Registration, as required by the Act of Council, sixteenth Victoria, number twenty-four; and hath humbly prayed that I would be pleased to grant Letters of Registration, whereby the exclusive enjoyment and advantage of the said invention or improvement might be secured to him for a period of fourteen years: And I, being willing to give encouragement to all inventions and improvements in the arts or manufactures which may be for the public good, and having received a report favourable to the prayer of the said Petition, from competent persons appointed by me to examine and consider the matters stated therein and to report thereon for my information, am pleased, with the advice of the Executive Council, and in exercise of the power and authority given to me by the said Act of Council, to grant, and do by these Letters of Registration grant unto the said John Walker, his executors, administrators, and assigns, the exclusive enjoyment and advantage of the said invention or improvement, for and during the term of fourteen years from the date hereof; to have, hold, and exercise unto the said John Walker, his executors, administrators, and assigns, the exclusive enjoyment and advantage thereof, for and during and unto the full end and term of fourteen years from the date of these presents next and immediately ensuing, and fully to be complete and ended: Provided always, that if the said John Walker shall not, within three days after the granting of these Letters of Registration, register the same in the proper office in the Supreme Court, at Sydney, in the said Colony of New South Wales, then these Letters of Registration, and all advantages whatsoever hereby granted, shall cease and become void.

In witness whereof, I have hereunto set my sign manual, and have caused the present Letters of Registration to be sealed with the seal of the said Colony of New South Wales, at Government House, Sydney, in New South Wales, this nineteenth day of January, in the year of our Lord one thousand eighteen hundred and eighty.

[L.S.] AUGUSTUS LOFTUS.

The Alexandra Lubricant.

SPECIFICATION of JOHN WALKER'S invention of a Lubricant and Cups, for any description of machinery, to be called "The Alexandra Lubricant."

THIS lubricant is a solid compound, and is composed of tallow, sperm oil, camphor, and plumbago, and is made as follows :—

I take 60 lbs. of the purest tallow (either mutton or beef), and add three and a half ($3\frac{1}{2}$) per cent. (more or less) of pure sperm oil ; I then take two (2) ounces of camphor, and, after dissolving it in its own weight of alcohol, I mix in one and a half ($1\frac{1}{2}$) ounces of plumbago. This is then mixed into the tallow and sperm oil when at a temperature of from 115° to 120°. The tallow prior to this is subjected for one or two hours (more or less) to a temperature of 155°. By this means all impurities settle to the bottom, whence they are removed.

Having thus described the nature of my invention and the mode of its manufacture, I wish it to be distinctly understood that I do not confine myself to the above proportion, or any other proportions, or to any particular temperature.

The cups (as shown in accompanying drawing) for supplying this compound to machinery are of peculiar construction, having conical sides, AAAA, semi-spherical bottoms, BB, and conical feeding tubes, CCCC. They are constructed of sheet copper, muntz metal, or any suitable material.

The feeder DD, that conveys the lubricant to the bearings, is made of brass rod, and at EE becomes hexagon in form, and is enlarged at that point to fill the feeding tube within $\frac{1}{16}$ inch, thus allowing the compound to flow on bearing through six (6) small channels.

F represents portion of feeder, projecting from tube, and resting on bearing G.

H shows flange, which rests on pillow-block cover ; and KK represents lid of cup, which opens by hinge at L.

M is section of feeder where hexagon, and N handle of same.

I do not confine myself to the size or material of which my cups may be constructed, as they may be altered or varied in these particulars without departing from the nature of my invention ; but I prefer to make them according to accompanying sketch for crank shaft bearings, the power of the engine being from 200 to 300-h.-p. nominal.

What I claim for the lubricant is,—

1. The combination of the above constituents and the special use therein of this article.
2. The non-viscidity of any part of such compound to the machinery, as effected by the lubricants mostly in use.
3. The special cheapness of the materials employed would render this lubricant more than three-quarters ($\frac{3}{4}$) less costly than others now in use.
4. I claim as a novelty the use of my lubricant as a polishing medium and for reduction of friction.

The great advantages arising from the use of my cups are,—

1. Should the temperature of any bearing become increased above its normal condition, the heat thus imparted to point of feeder is conveyed to the sectional portion of same, and at once increases the supply of the lubricant through the six (6) channels aforenamed.
2. The body of cup being conical, and the bottom semi-spherical, ensures a continual supply of the compound to feeding tube, and prevents any residue remaining in said cup.
3. The conical shape of feeding tube ensures the feeder being at all times well supplied with the compound, which, through the hexagon shape of feeder, is carried well diffused on to the bearing.

This is the specification referred to in my Petition of 15th December, 1879.

JOHN WALKER.

This is the specification referred to in the annexed Letters of Registration granted to John Walker, this nineteenth day of January, A.D. 1880.

AUGUSTUS LOFTUS.

REPORT.

Sir, Sydney, 19 December, 1879.

The application of Mr. John Walker for Letters of Registration for an invention termed "The Alexandra Lubricant, together with a Cup for the application of the same," having been referred to us, we have examined the specification and drawing accompanying the same, and have now the honor to report that we see no objection to the issue of Letters of Registration as prayed for.

We have, &c.,

J. SMITH.

The Principal Under Secretary. E. C. CRACKNELL.

[Drawing—one sheet.]

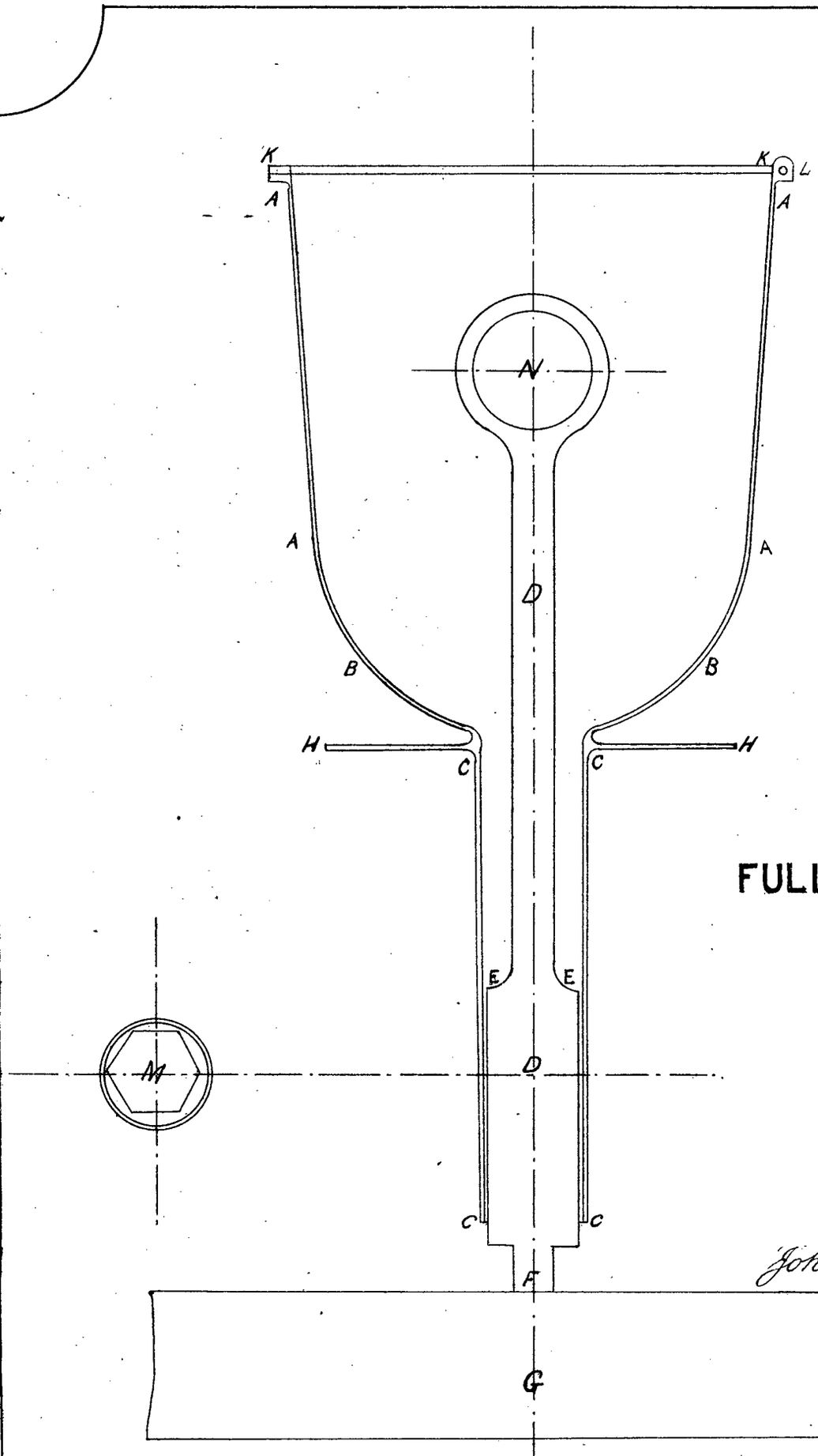

John Walker.

This is the Drawing referred to in the annexed Letters of Registration, granted to John Walker this nineteenth day of January, A.D. 1880.

Augustus Loftus.

A.D. 1880, 19*th January*. No. 793.

IMPROVEMENTS IN THE TREATMENT OF PYRITES, &c.

LETTERS OF REGISTRATION to John Hollway, for Improvements in the treatment of Pyrites, and in the separation of metalliferous and other substances therefrom and thereby, and in the means employed therefor.

[Registered on the 20th day of January, 1880, in pursuance of the Act 16 Vic. No. 24.]

BY His Excellency the Right Honorable Sir Augustus William Frederick Spencer Loftus (commonly called Lord Augustus Loftus), Knight Grand Cross of the Most Honorable Order of the Bath, a Member of Her Majesty's Most Honorable Privy Council, Governor and Commander-in-Chief of the Colony of New South Wales and its Dependencies.

TO ALL TO WHOM THESE PRESENTS SHALL COME, greeting :

WHEREAS John Hollway, of 7, Jeffrey's Square, in the city of London, in that part of Her Majesty's dominions called England, hath by his Petition humbly represented to me that he is the author or designer of a certain invention or improvement in manufactures, that is to say, of an invention entitled "Improvements in the treatment of Pyrites, and in the separation of metalliferous and other substances therefrom and thereby, and in the means employed therefor," which is more particularly described in the specification which is hereunto annexed ; and that he, the said Petitioner, hath deposited with the Honorable the Treasurer of the said Colony of New South Wales the sum of Twenty Pounds sterling, for defraying the expense of granting these Letters of Registration, as required by the Act of Council, sixteenth Victoria, number twenty-four ; and hath humbly prayed that I would be pleased to grant Letters of Registration, whereby the exclusive enjoyment and advantage of the said invention or improvement might be secured to him for a period of fourteen years : And I, being willing to give encouragement to all inventions and improvements in the arts or manufactures which may be for the public good, and having received a report favourable to the prayer of the said Petition, from competent persons appointed by me to examine and consider the matters stated therein and to report thereon for my information, am pleased, with the advice of the Executive Council, and in exercise of the power and authority given to me by the said Act of Council, to grant, and do by these Letters of Registration grant unto the said John Hollway, his executors, administrators, and assigns, the exclusive enjoyment and advantage of the said invention or improvement, for and during the term of fourteen years from the date hereof ; to have, hold, and exercise unto the said John Hollway, his executors, administrators, and assigns, the exclusive enjoyment and advantage thereof, for and during and unto the full end and term of fourteen years from the date of these presents next and immediately ensuing, and fully to be complete and ended : Provided always, that if the said John Hollway shall not, within three days after the granting of these Letters of Registration, register the same in the proper office in the Supreme Court, at Sydney, in the said Colony of New South Wales, then these Letters of Registration, and all advantages whatsoever hereby granted, shall cease and become void.

In witness whereof, I have hereunto set my sign manual, and have caused the present Letters of Registration to be sealed with the seal of the said Colony of New South Wales, at Government House, Sydney, in New South Wales, this nineteenth day of January, in the year of our Lord one thousand eight hundred and eighty.

[L.S.] AUGUSTUS LOFTUS.

SPECIFICATION

Improvements in the treatment of Pyrites.

SPECIFICATION of JOHN HOLLWAY, of 7, Jeffrey's Square, in the city of London, in that part of Her Majesty's dominions called England, for an invention entitled "Improvements in the treatment of Pyrites, and in the separation of metalliferous and other substances therefrom and thereby, and in the means employed therefor."

IN the first place these improvements consist in heating iron pyrites or cupreous iron pyrites by means of steam, or in a current of steam in closed vessels, in such a manner that I obtain—

1st—The whole or part of one equivalent of the sulphur originally combined with iron in the pyrites as crude free sulphur.

2nd—The other or part of the other equivalent of the sulphur, either as crude free sulphur or as sulphuretted hydrogen, and from the latter I obtain sulphur by any of the well-known processes, or I utilize the sulphuretted hydrogen for precipitating sulphide of copper from cupreous solutions.

3rd—The metals and other substances carried over by the vapours.

4th—A residue containing the copper and other metals, from which residue the copper, silver, and gold can be extracted; the oxide of iron which remains can also be utilized.

As an example of the mode in which I operate, I fill or partially fill with pyrites a retort chamber or other vessel set in a furnace, and after heating it to dull redness, I introduce or drive through the pyrites a current of superheated steam. I then raise the temperature of the vessel, and I find that the steam carries over in suspension about one equivalent, that is about one-half of the sulphur originally combined with the iron in the pyrites. A stream of sulphuretted hydrogen is evolved, which continues until the end of the operation. I then find that the whole or part of the sulphur has been obtained from the pyrites as crude sulphur, and in the state of sulphuretted hydrogen, the relative proportions and the quantities varying according to the temperature and the length of the operation.

In preference I employ a temperature of about 1,500° Fahrenheit, because I then obtain a large yield of free crude sulphur; and, by still further increasing the temperature of the operation, I obtain the major part of the sulphur originally combined with the iron in the pyrites as free crude sulphur and hydrogen is evolved, which I burn as fuel or otherwise utilize.

When cupreous iron pyrites is thus treated, and when at the end of the operation, hydrogen and sulphuretted hydrogen almost cease to be given off, the residue consists principally of oxide of iron and sulphide of copper, from which the copper can be extracted and the oxide of iron afterwards utilized.

By thus treating at a temperature of 1,400° Fahrenheit cupreous iron pyrites containing 47·96% of sulphur, I obtained about 23·7% of crude free sulphur, that is, practically one-half of the sulphur originally combined with the iron in the pyrites, nearly the whole of the remainder of the sulphur being evolved as sulphuretted hydrogen.

When pyrites is poor in copper, I distil off as before described the greater part of one equivalent of the sulphur. I then either utilize the residue as hereinafter explained, or I expose the said residue to the action of air and moisture, whereby sulphate of copper will be formed, and from which the metallic copper can be obtained by any of the well-known means.

The mode of treating the pyrites may be modified, for example:—In lieu of heating the retort chamber or other vessel externally, the steam may be introduced at a sufficiently high temperature to expel the sulphur without the assistance of external heat; or when sufficient external heat is employed to fuse and keep the sulphides and oxides molten the superheated steam can be driven through them in somewhat the same manner that air is driven through molten crude iron in the Bessemer operation.

In the second place these improvements consist in treating iron pyrites, cupreous iron pyrites, and pyrites residues, with or without the addition of other metalliferous substances or slag-producing materials, in such a manner that I utilize the sulphides as fuel, and obtain—

1st—Nearly the whole of the sulphur from the pyrites as crude free sulphur and as sulphurous acid.

2nd—In separate groups the metals originally contained in the pyrites and other substances operated on, either in the form of sulphides, oxides, or in the metallic state.

3rd—A slag rich in iron, from which metallic iron can be obtained.

In carrying out this object, I employ either a fixed furnace such as a modification of the ordinary blast furnace and the Bessemer converter, or a modified Bessemer; but in preference I employ both descriptions of furnace, so arranged that the free sulphur, sulphurous acid, and the metallic and other substances carried over by the vapours are collected. This can be effected by somewhat similar means to those employed for collecting and utilizing the gases from blast furnaces. I drive in air at or near the bottom of the furnaces, and I regulate the temperature of the operations by increasing or decreasing the quantity; sulphide of iron being oxidised in preference to sulphide of copper—the latter always accumulates—and I withdraw the regulus whenever sufficiently rich in copper.

When commencing the operation it is convenient to run into the fixed furnace a quantity of molten sulphide of iron, and then introduce at or near the top of the furnace the pyrites or sulphides with or without other metalliferous substances and slag-producing materials; they descend, and the heat evolved from the oxidation of the sulphides in the lower part of the furnace causes part of the sulphur originally combined with the iron in the pyrites to be driven off as free sulphur, and the resulting sulphides are subsequently burnt by the oxygen of the air driven in at the lower part of the furnace, thereby producing the heat necessary for continuing the operations.

When employing pyrites or residues therefrom containing very little silica, it is advisable to add silicious and other slag-producing materials, in order to form with the oxide of iron produced an easily fusible liquid slag of such a gravity that the resulting regulus being heavier will, when no longer agitated, sink through and collect below the molten slag. I employ in preference metalliferous substances which will supply the necessary slag-producing materials, and I am thus enabled to utilize substances which contain valuable metals in such small quantities as to render them unsuitable for treatment by ordinary methods.

Improvements in the treatment of Pyrites.

I withdraw from time to time the slag when the quantity becomes excessive and so saturated with oxide of iron that it does not readily take up that formed by the oxidation of the sulphide of iron.

Before introducing valuable metalliferous substances into the furnace I withdraw the slag, or render it so basic by means of fluxes that the loss of the valuable metallic oxides is reduced to a minimum.

When I employ a fixed furnace and continuously drive air through the sulphides contained therein, I find that the regulus withdrawn therefrom is mixed with slag; I therefore either withdraw the regulus and slag at a temperature sufficiently high to permit them to separate before cooling, or I run them into another furnace where I maintain them fluid by extraneous heat, or into a modified Bessemer, in either of which I continue the oxidation by means of air. After withdrawing the regulus I recommence introducing pyrites, and the slag left in the furnace being very hot expels as free sulphur part of the sulphur originally combined with the iron in the pyrites.

With an ordinary Bessemer plant and employing pyrites containing $3\frac{1}{2}$ per cent. of copper, I have obtained in actual experiments a regulus containing as much as 59·98 per cent. of copper and 48 ozs. 6 dwts. 3 grs. of silver, and 1 oz. 6 dwts. 3 grs. of gold per ton of regulus, with a slag containing less than $\frac{1}{10}$ per cent. of copper.

When thus operating, the heat produced by the oxidation of the sulphides in the lower part of the furnace is sufficient not only to expel as free crude sulphur part of the sulphur combined with the iron in the pyrites, but there is a surplus of heat which I utilize for heating other metalliferous substances, and I thus obtain in different groups as metals, or in the form of sulphides, oxides, or as slag, the metals originally contained in the pyrites and in the other substances introduced into the furnace.

I employ a hot blast of air when I desire to operate on a large proportion of metallic oxides as compared with the pyrites and sulphides employed; and when I desire to obtain a large proportion of free sulphur in lieu of employing all the surplus heat for heating metallic oxides, I introduce superheated steam into the furnace in addition to the air, which latter I introduce as a hot blast, and in sufficient quantity to compensate for the reduction of temperature caused by the steam employed, and also to produce enough heat to expel as free sulphur about one equivalent, that is about one-half of the sulphur originally combined with the iron in the pyrites introduced at the upper part of the furnace. By thus employing superheated steam I obtain free sulphur expelled from the pyrites, whereby proto-sulphide of iron is formed, and an additional quantity of free sulphur liberated from the residual sulphides.

While pyrites is being introduced, care must be taken to prevent access of a greater volume of air than is necessary for the formation of sulphurous acid and oxide of iron by the combustion of the sulphide of iron contained in the lower part of the furnace, and in preference I employ furnaces of sufficient depth or height so that the free oxygen of the air blown in neither comes into contact with the pyrites nor with the sulphur liberated, but is expended in the formation of oxide of iron and sulphurous acid as before described; for the same reason it is desirable to introduce the pyrites in small pieces, and I thus utilize the small pyrites which has been hitherto wasted.

The high temperature at which the gases pass upward in the furnace assists the liberation of sulphur, and the gases carry with them the free crude sulphur as well as the metals and other substances volatilized.

By these means I utilize the sulphides as fuel, and obtain—

1st—Free sulphur expelled from the pyrites, whereby proto-sulphide of iron is formed, and also a further proportion of sulphur which is liberated when superheated steam is employed.
2nd—Nearly the whole of the remainder of the sulphur as sulphurous acid.
3rd—The metals and other substances carried over by the vapours.
4th—The cupriferous sulphides which contain the silver and gold originally in the pyrites and other substances employed.
5th—A slag rich in iron, from which metallic iron can be obtained.

In preference I employ both processes, and I obtain from the gases evolved the sulphur liberated by the decomposition of sulphurous acid in contact with free hydrogen at a high temperature as well as by the mutual decomposition of the sulphuretted hydrogen and sulphurous acid, and to facilitate this latter reaction these gases can be passed into water.

When necessary I line the furnaces and the retorts, chambers, or other vessels, as well as the passages through which the gases pass, with materials which will protect them from the action of the sulphides or oxides present, and I make arrangements for collecting and separating the sulphur, sulphurous acid, and the substances carried over by the vapours.

I preferably pass the vapours through one or more chambers so as to allow the metallic and other substances to deposit therein before separating the sulphur from the vapours.

When I require to produce sulphur practically free from arsenic, I digest the crude sulphur with a dilute solution of alkali or alkaline sulphide, preferably cold, and thus render the sulphide of arsenic soluble, so that by decantation or filtration it can be removed.

I therefore claim as new and of my invention improvements in the production of sulphur from pyrites, in the utilization of sulphides in lieu of fuel, in the obtaining in separate groups as metals, or in the form of oxides, sulphides, or as slag, the metals originally contained in the pyrites and other substances operated on, and in the means employed therefor, all as hereinbefore substantially set forth.

In witness whereof, I, the said John Hollway, have hereunto set my hand and seal, this second day of August, 1878.

JOHN HOLLWAY.

This is the specification referred to in the annexed Letters of Registration granted to John Hollway, this nineteenth day of January, A.D. 1880.

AUGUSTUS LOFTUS.

REPORT.

A.D. 1880. No. 793.

Improvements in the treatment of Pyrites.

REPORT.

Sir,

Sydney, 16 December, 1879.

We do ourselves the honor to state that we are of opinion that Letters of Registration may issue in favour of Mr. John Hollway, for an invention of "Improvements in the treatment of Pyrites," in accordance with his Petition, specification, and claim, transmitted for our report under your blank cover communication of the 1st instant, No. 9,384.

We have, &c.,
GOTHER K. MANN.
CHAS. WATT.

The Principal Under Secretary.

A.D. 1880, 19*th January*. No. 794.

IMPROVEMENTS IN MALTING, &c.

LETTERS OF REGISTRATION to Nicolaus Joseph Galland and Henry Simon, for Improvements in Malting, and in the Apparatus employed for that purpose.

[Registered on the 20th day of January, 1880, in pursuance of the Act 16 Vic. No. 24.]

BY His Excellency the Right Honorable Sir Augustus William Frederick Spencer Loftus (commonly called Lord Augustus Loftus), Knight Grand Cross of the Most Honorable Order of the Bath, a Member of Her Majesty's Most Honorable Privy Council, Governor and Commander-in-Chief of the Colony of New South Wales and its Dependencies.

TO ALL TO WHOM THESE PRESENTS SHALL COME, greeting:

WHEREAS Nicolaus Joseph Galland, of Paris, France, engineer, and Henry Simon, of No. 7, St. Peter's Square, Manchester, in the county of Lancaster, civil engineer, have by their Petition humbly represented to me that they are the authors or designers of a certain invention or improvement in manufactures, that is to say, of an invention entitled "Improvements in Malting, and in the Apparatus employed for that purpose," which is more particularly described in the specification, marked A, and the three sheets of drawings, marked B, C, and D, respectively, which are hereunto annexed; and that they, the said Petitioners, have deposited with the Honorable the Treasurer of the said Colony of New South Wales the sum of Twenty Pounds sterling, for defraying the expense of granting these Letters of Registration, as required by the Act of Council, sixteenth Victoria, number twenty-four; and have humbly prayed that I would be pleased to grant Letters of Registration, whereby the exclusive enjoyment and advantage of the said invention or improvement might be secured to them for a period of fourteen years: And I, being willing to give encouragement to all inventions and improvements in the arts or manufactures which may be for the public good, and having received a report favourable to the prayer of the said Petition, from competent persons appointed by me to examine and consider the matters stated therein and to report thereon for my information, am pleased, with the advice of the Executive Council, and in exercise of the power and authority given to me by the said Act of Council, to grant, and do by these Letters of Registration grant unto the said Nicolaus Joseph Galland and Henry Simon, their executors, administrators, and assigns, the exclusive enjoyment and advantage of the said invention or improvement, for and during the term of fourteen years from the date hereof; to have, hold, and exercise unto the said Nicolaus Joseph Galland and Henry Simon, their executors, administrators, and assigns, the exclusive enjoyment and advantage thereof, for and during and unto the full end and term of fourteen years from the date of these presents next and immediately ensuing, and fully to be complete and ended: Provided always, that if the said Nicolaus Joseph Galland and Henry Simon shall not, within three days after the granting of these Letters of Registration, register the same in the proper office in the Supreme Court, at Sydney, in the said Colony of New South Wales, then these Letters of Registration, and all advantages whatsoever hereby granted, shall cease and become void.

In witness whereof, I have hereunto set my sign manual, and have caused the present Letters of Registration to be sealed with the seal of the said Colony of New South Wales, at Government House, Sydney, in New South Wales, this nineteenth day of January, in the year of our Lord one thousand eight hundred and eighty.

[L.S.] AUGUSTUS LOFTUS.

Improvements in Malting, &c.

A.

SPECIFICATION of NICOLAUS JOSEPH GALLAND, of Paris, France, engineer, and HENRY SIMON, of No. 7, St. Peter's Square, Manchester, in the county of Lancaster, England, civil engineer, for an invention entitled "Improvements in Malting and in the Apparatus employed for that purpose."

MALTING in the usual manner cannot be advantageously carried on except under moderate temperatures, the great heat of summer and the extreme cold of winter being alike prejudicial to the process, and in many cases preventive of it. This invention has for its object to enable the malting process to be carried on independently of the external temperature, and it consists essentially in providing means for passing currents of warmed, cooled, or moistened and purified air through the grain which has to be malted, and in arranging the various parts of the malting apparatus so as to economise space and labour. The accompanying drawings show various arrangements for this purpose. Those shown on sheet I, which are of a simple character, involving little machinery, will be first described as explanatory of the principle of operation, which is more completely carried out by the arrangements shown in sheets II and III. Referring first to sheet I, fig. 1^A is a longitudinal section, fig. 2^A a transverse section, and fig. 3^A is a part plan of a malting house arranged according to this invention. A is an upper chamber, on the floor of which may conveniently be laid lines of rail for trucks, F, to receive the grain from a floor above and deliver it into tanks, D, arranged below. Each of the tanks D has a false bottom, D^1, of perforated metal or wove wire, the perforations being as large and numerous as possible, to permit free passage of air but not to allow the grain to pass through them. Below the tanks D is an air-flue, E, which communicates by apertures with the spaces under the perforated bottom D^1, and also through openings in a grating with a chamber C containing moistened coke, with ice when it is necessary to cool the air considerably. The upper part of the chamber C communicates by a passage, C^1, with the chamber, A. A fan, B, causes circulation of the air in the direction indicated by the arrows. The grain charged into the tanks D having been steeped in the usual way, and the water having been run off by suitable drains, the fan B is put in action, causing moistened and cooled air from the chamber C to pass into the chamber A, thence down through the grain in the tanks D into the flue E, and back through the chamber C. This goes on during the germination of the grain, and when necessary fresh air can be admitted by an opening, V^1, a portion of the air more or less vitiated being allowed to escape by an opening, V. A single fan, B, may operate on all the tanks, as shown in figs. 1^A and 3^A, or each tank may have its own fan, as shown at B^1, fig. 2^A. The operation may be made continuous by arranging the tanks so as to be used in succession, as shown in section at fig 4^A, and in plan at fig. 5^A. In this arrangement there are a number of tanks *a*, *b*, *c*, *d*, *e*, side by side, and another set, 1, 2, 3, &c., transverse to them. Over each of the tanks *a*, *b*, *c*, *d*, &c., is a steeping vat, E, and each tank has its own fan, B, for causing air circulation. After steeping in the vat E the grain is discharged into *a*, in which it is aërated for fifty or sixty hours, and whence it is discharged into 1 and further aërated. Meanwhile a charge has been steeped in the vat E^1, discharged into *b*, and aërated therein, and the contents of 1 having been moved into 2, the contents of *b* are discharged into 1. This succession goes on with the other vats and tanks, the grain being advanced through the vats 1, 2, 3, &c., in order, until it reaches the last of these, whence it is removed to be dried. By thus arranging the operations all the tanks are kept occupied, and their number is such as to time the operations so that the malt can be removed to be dried twice daily. It is an advantage in all cases to provide an air space between the germinating tanks and the outer wall of the building, so that the material under treatment may not be affected by changes of external temperature.

When the more complete apparatus shown in sheets II and III is employed the course of operations is as follows:—The grain having been steeped in vats and couched in tanks, aërated as above described, is introduced into germinating drums, where it is subjected to the action of air suitably prepared, as will now be explained with reference to the drawings. Fig. 1 is a longitudinal section, fig. 2 a sectional plan, and fig. 3 a transverse section of a malting establishment, arranged with apparatus according to this invention. The grain, after having been steeped in vats A^1, which may be situated as shown on the ground floor of the building, is couched in tanks A on the upper floor in a chamber, O, which has no opening to the external atmosphere. Each of the tanks A has a perforated bottom, B, with a space below it, which is supplied with air by a pipe, D, from a flue, C, and from which air is drawn off by a pipe, E, to an exhaust flue, C^1. The grain having been for a sufficient time exposed to the action of air currents, is discharged from the tanks A through openings in the floor into the germinating drum F on the floor below, one of these drums being for convenience arranged under each of the tanks A. Fig. 4 is a longitudinal section, and fig. 5 a transverse section of one of the drums F. It consists of an outer shell of perforated metal or wove wire, with a central perforated tube, G, which at one end is closed, and at its other end communicates by a pipe, E^1, with the exhaust flue C^1. The tube, which revolves with the drum, is divided by longitudinal partitions into several segmental compartments, the exhaust from each of which is regulated by a valve, H, as will be presently explained. The drum rests on rollers, I, and has a toothed ring, K, gearing with a pinion, K^1, driven by worm gear, K^2, from any convenient motor. The drum being thus made to revolve very slowly, the grain with which it is partly filled takes an inclined position, portions continually falling down the slope, so as to expose fresh portions at the inclined surface. Moistened and tempered air is by the action of the exhaust drawn from the room through the grain in the drum, and into the compartments of the central tube G, and thence to the exhaust flue C^1. In order to ensure uniformity of aëration, the mouths of the several compartments of the central tube are more or less closed by a stationary valve, H, as shown to an enlarged scale in figs. 6 and 7. This valve has small openings, H^1, on the side towards the inclined surface of the grain, and larger openings, H^2, on the opposite side. Thus the air which would otherwise pass too freely through the upper thin layer of grain is checked, while greater passage is allowed for the air that has to pass through the thicker mass of grain. The valve H is mounted loose on a central rod, and is held against the face of the tube by a nut, H^3. It is prevented from revolving with the tube by a stud on it, H^4, bearing against a fixed pin, H^5. The air tube E has a removable cover, E^2, by which access can be got to the valve H. From the exterior of the tube G spikes, L, project, which serve to separate the grains from each other as they fall over. A door, F^1, is provided in the external periphery for charging the drum from the tanks A, and for discharging its contents after germination into trucks X in a passage below. The dimensions of the drums may be varied; practically a diameter

diameter and length of from 5 to 8 feet are found useful. The air required for the germinating process passes upwards through a column, M, of coke or other porous material, resting on a perforated bottom M^1, while water, supplied from perforated pipes, N, trickles downwards. Thus the air issuing at the top having acquired nearly the same temperature as the water, and being moistened and purified, passes through openings M^2 into the chamber O, whence it is drawn through the drums F. The bottom of the coke chamber communicates with the outer air by an opening, P, provided with a slide, P^1, and also with the supply flue C, which has a slide, C^2. The flue C is in communication with a shaft, Q, having a slide, Q^1, and also with the discharge of a fan, R, the inlet of which communicates with the exhaust flue C^1, to which lead the exhaust pipes E and E^1 from the tanks A and the tubes of the drums F, each of these pipes having a throttle-valve, S^1. By closing the slides P^1 and Q^1 the external air is quite excluded, continuous circulation then taking place of air from M through the material in A and F by the pipes E E^1 to the flue C^1, thence drawn by the fan R and forced into the flue C again to supply M. By partly opening P^1 and Q^1 the air may be partly drawn from without and partly discharged externally. By closing C^2 while P^1 and Q^1 are fully open, the whole air supply may be taken from without. Thus, according to the condition of the grain and the state of the atmosphere, the air circulating through the grain can be varied in temperature and moisture by suitable adjustment of the slides in the flues, whilst each of the germinating tanks and drums can have its own circulation regulated or cut off by the throttle-valve S^1. As a very small pressure is required to effect the necessary circulation, the building does not require to be hermetically air-tight. Instead of employing a single coke chamber or filter, as shown in fig. 1, it is of advantage to provide several such chambers, through all or any number of which the air may be made to pass, according as it requires more or less tempering and moistening. Fig. 8 is a vertical section of four such filters arranged side by side with valves, whereby the passage of air can be regulated as desired. Between the the coke cells T^1, T^2, &c., are vertical air-channels U^1, U^2, &c., each having at the top a flap, V^1, and at the bottom a side opening, Y, into the next cell in order, with a flap, V; under the perforated floor of each cell there are also flaps, and between the tops of the cells are slides, X^1, X^2, &c. As the setting of the valves is shown in fig. 8, the first cell, T^1, and the last, T^4, are excluded from the circulation which takes place from the supply flue W up through T^2, down U^2, and up through T^3. By suitable alteration of the valves the circulation could obviously be altered so as to pass the air through a greater or less number of the coke columns successively, or to exclude from the circulation one or other of the cells, for emptying, cleansing, or replenishing it, without having to stop the action of the rest of the apparatus. In order to clean the coke filters after they have been for some time in use, and to kill any vegetable germs, they are closed at the top and steam of high temperature is admitted. After being subjected for several hours to the action of the steam the filter is washed out by an abundant supply of cold water. This cleansing may be effected even when a single filter such as M fig. 1 is employed, as the germination can without serious inconvenience go on for several hours without filtered air. The dimensions of the filters may vary. A single one such as M fig. 1 may be from about 2 to 5 feet in width, and any height from about 5 feet to 15 feet. When multiple filters are employed, their aggregate volume should not be less than that of the single filter. It is important to make the coke columns as high as possible, as greater height ensures longer contact of the air with the tempering medium. Where the external air is very impure, the supply should be sifted through fibrous material or porous screens.

Having thus described the nature of our invention and in what manner the same is to be performed, we claim:—

First—The process of pneumatic malting, consisting in the combination of the consecutive operations whereby the grain is first treated in steeping and couching tanks, and is then subjected in tanks having perforated floors to regulated currents of cooled, moistened, and filtered air, substantially as herein described.

Second—In the process of pneumatic malting the combination of consecutive operations herein described, whereby the grain is first treated in steeping and couching tanks, and is then subjected inside revolving germinating drums to regulated currents of cooled, moist, and filtered air drawn through the drums from the germinating room, into which it is introduced through coke filters, arranged and operating substantially as herein described.

Third—The construction of revolving germinating drums with a perforated shell and central perforated tube or chamber from which the air is exhausted, so as to cause currents of air entering through the shell of the drum to pass through the body of the grain while this is continuously or intermittently kept in motion by the rotation of the drum, substantially as herein described.

Fourth—In revolving germinating drums constructed and operating as described in the preceding claim, constructing the central perforated tube with several separate compartments, the communication of which with the exhaust is regulated by a valve or valves, so as to cause the air to penetrate more or less equally throughout the mass of grain before entering the said tube, substantially as herein described.

Fifth—The combined arrangement in one arrangement, in one and the same room, of a series of couching tanks, each of which is situated directly above one of a series of revolving germinating drums, so that the contents of each tank can be conveyed directly into the drum below, the exhaust from the couching tank and its respective germinating drum being led through branches of one and the same tube provided with valves into a main exhaust channel, substantially as herein described.

Sixth—The method herein described of regulating the extent or duration of the action of moistened coke chambers upon the air currents, according to variations in the temperature of the atmosphere and of the water used for sprinkling.

Seventh—The construction of multiple coke chambers in combination with communicating air passages and regulating slides or flaps, whereby the air may be caused to pass through a greater or less number of separate moistened coke columns, according as the condition of the atmosphere and of the cooling water may require.

Eighth—

Eighth—The arrangement of air, exhaust, and delivery pipes, flues, or channels provided with valves or slides in combination with the germinating drums and coke chambers, in such manner that either the whole of the air supply may be taken continuously from the atmosphere, or that only a portion of the circulating air is taken from the atmosphere, or that the outer atmosphere is entirely excluded, and one and the same body of air made to circulate continuously through the apparatus, substantially as herein described with reference to the accompanying drawing.

In witness whereof, we the said Nicolaus Joseph Galland and Henry Simon have hereunto set our hands and seals, this sixteenth day of October, 1879.

NICOLAUS JOSEPH GALLAND.
HENRY SIMON.

Witnesses to the signature of Nicolaus Joseph Galland,—
HENRY WILLOUGHBY, British Vice-Consul at Paris.
ALFRED GUTINS MESSENGER, British Embassy, Paris.

Witnesses to the signature of Henry Simon,—
JOSEPH INGLEBY.
FRANZ LUDWIG.

This is the specification, marked A, referred to in the annexed Letters of Registration granted to Nicolaus Joseph Galland and Henry Simon, this nineteenth day of January, A.D. 1880.

AUGUSTUS LOFTUS.

REPORT.

Sir, Sydney, 20 December, 1879.

The application of Messrs. N. J. Galland and H. Simon for Letters of Registration for "Improvements in Malting, and in the Apparatus employed for that purpose," having been referred to us, we have examined the specification and drawings accompanying the same, and have now the honor to report that we see no objection to the granting of Letters of Registration as prayed for.

We have, &c.,
J. SMITH.
CHAS. WATT.

The Principal Under Secretary.

[Drawings—three sheets.]

"B"

[794]
(3 Sheets)
Sheet 1.

Fig. 1.a

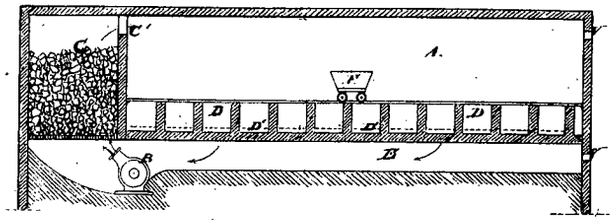

Fig. 2.a

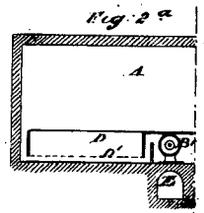

Fig. 3.a

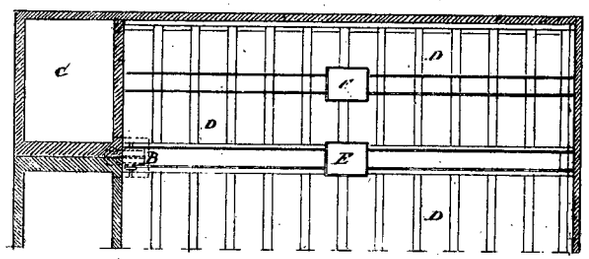

Fig. 4.a

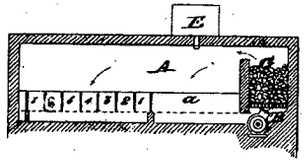

Fig. 5.a

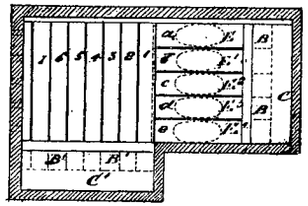

(Sd 357)

PHOTO-LITHOGRAPHED AT THE GOV.. PRINTING OFFICE, SYDNEY, NEW SOUTH WALES

This is the sheet of Drawings marked "B" referred to in the Letters of Registration granted to Nicolaus Josefus Galland and Henry Simon this nineteenth day of January A.D. 1881.

"Augustus Softness"

"C"

[791]

(3 Sheets)

Sheet III.

Fig: 1.

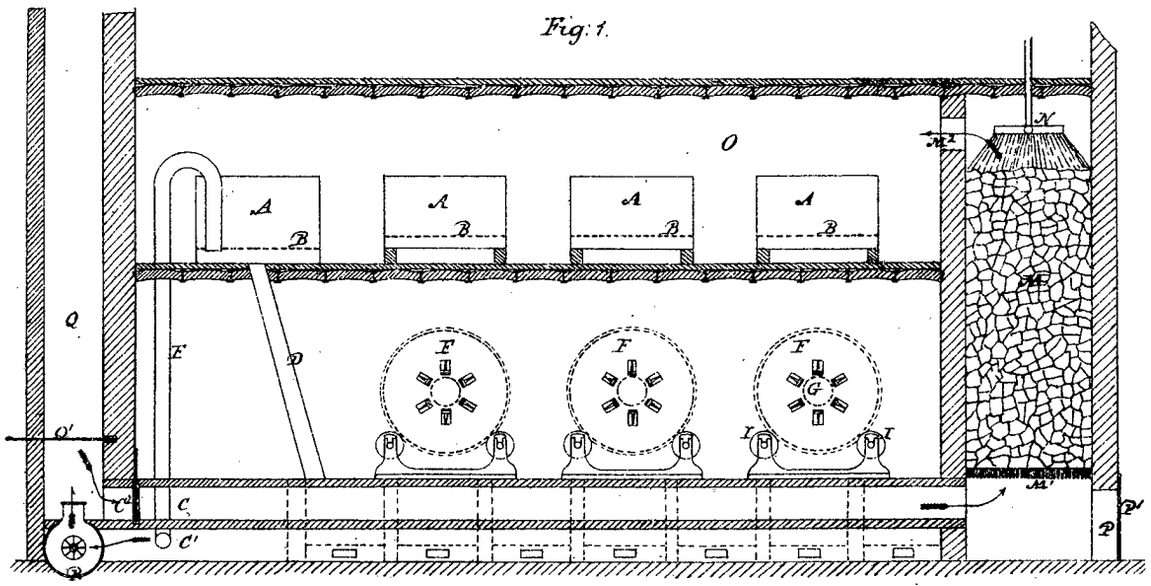

Fig: 2.

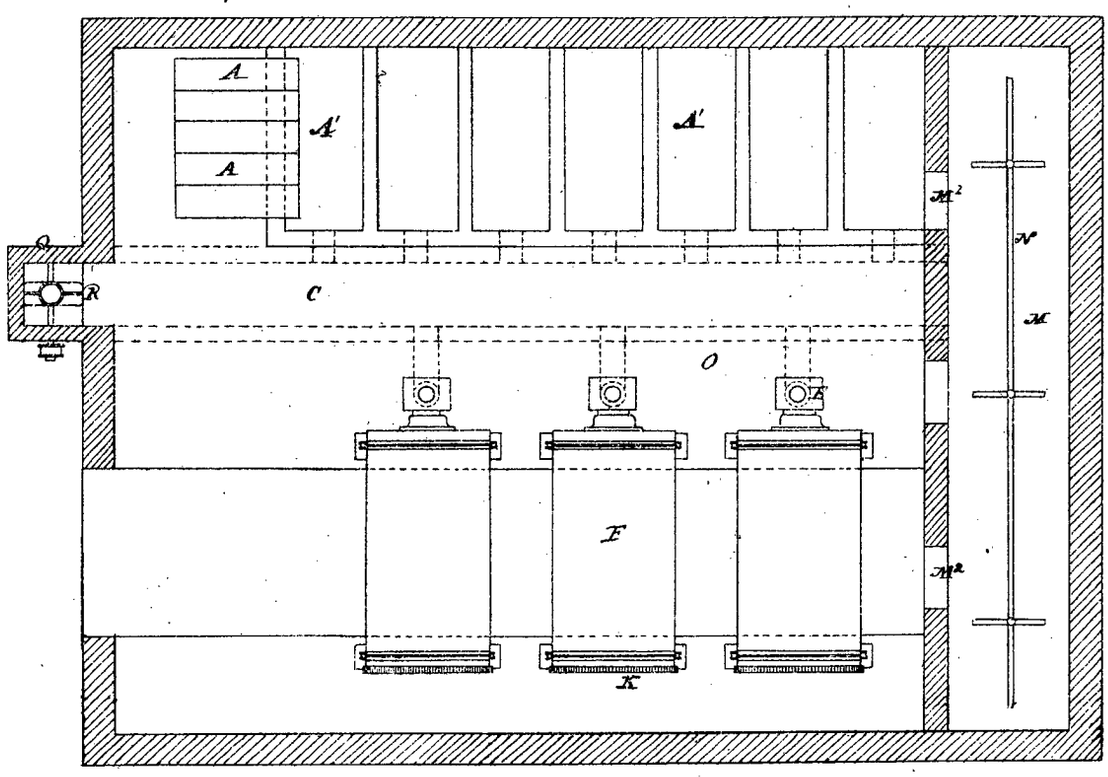

(Sig 357)

This is the Sheet of Drawings marked C referred to in the annexed Letters Patent granted to Nicolaus Joseph Galland and Henry Simon this twelfth day of January A.D. 1880.

"Augustus Sutro"

PHOTO-LITHOGRAPHED AT THE GOVT. PRINTING OFFICE SYDNEY, NEW SOUTH WALES.

"D"

[794]
(3 Sheets)
Sheet III.

Fig: 3.

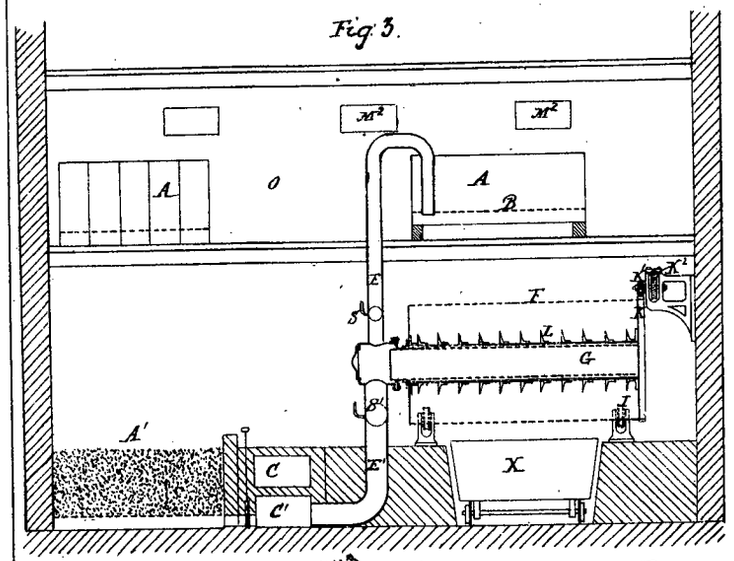

Fig: 4.

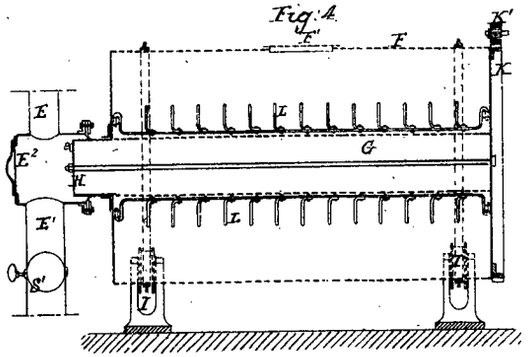

Fig: 5.

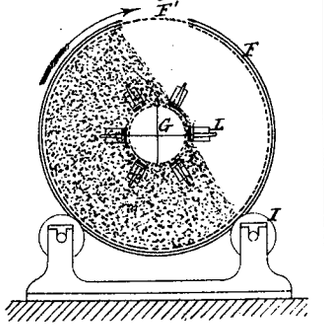

Fig: 6.

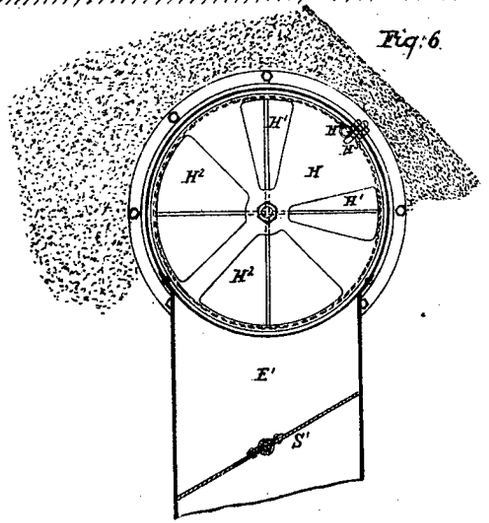

Fig: 7.

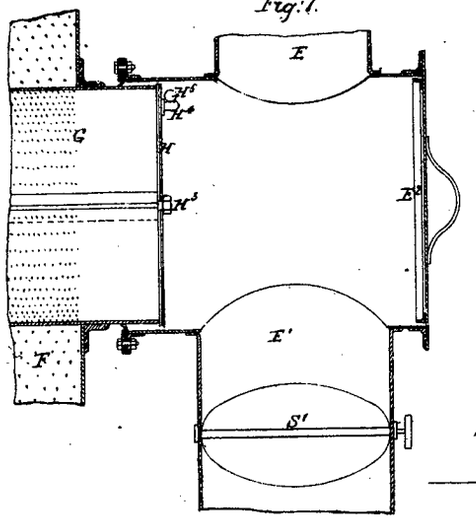

Fig: 8.

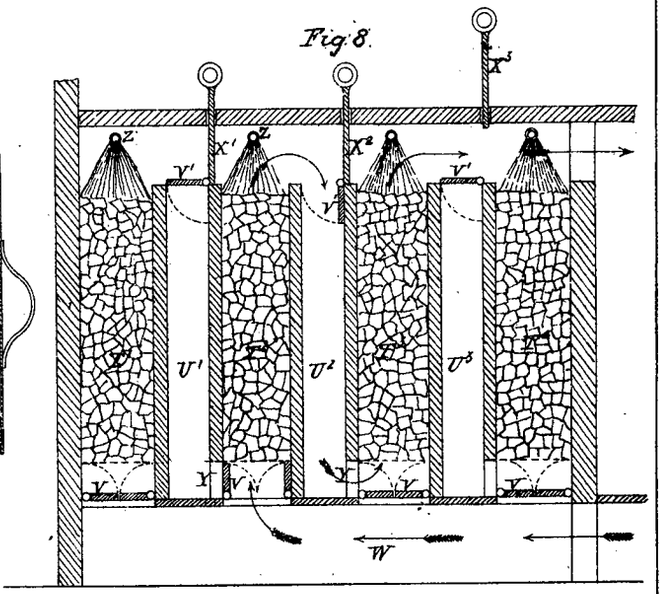

(Sig. 357)

PHOTO-LITHOGRAPHED AT THE GOVT. PRINTING OFFICE, SYDNEY, NEW SOUTH WALES.

This is the Sheet of Drawings, marked D referred to in the annexed Letters of Registration granted to Nicolaus Joseph Galland and Henry Simon this nineteenth day of January A.D. 1880.

"Augustus Loftus"

A.D. 1880, 19*th January*. No. 795.

IMPROVEMENTS IN THE MANUFACTURE OF BRUSHES, &c.

LETTERS OF REGISTRATION to Charles Adolphus Watkins, for Improvements in the manufacture of Brushes, and in the Apparatus employed therein.

[Registered on the 20th day of January, 1880, in pursuance of the Act 16 Vic. No. 24.]

BY His Excellency the Right Honorable Sir Augustus William Frederick Spencer Loftus (commonly called Lord Augustus Loftus), Knight Grand Cross of the Most Honorable Order of the Bath, a Member of Her Majesty's Most Honorable Privy Council, Governor and Commander-in-Chief of the Colony of New South Wales and its Dependencies.

TO ALL TO WHOM THESE PRESENTS SHALL COME, greeting:

WHEREAS Charles Adolphus Watkins, of the firm of Hamilton and Company, of Greek-street, Soho, in the county of Middlesex, in the Kingdom of England, brush manufacturers, hath by his Petition humbly represented to me that he is the author or designer of a certain invention or improvement in manufactures, that is to say, of an invention for "Improvements in the manufacture of Brushes, and in the Apparatus employed therein," which is more particularly described in the specification and the sheet of drawings which are hereunto annexed; and that he, the said Petitioner, hath deposited with the Honorable the Treasurer of the said Colony of New South Wales the sum of Twenty Pounds sterling, for defraying the expense of granting these Letters of Registration, as required by the Act of Council, sixteenth Victoria, number twenty-four; and hath humbly prayed that I would be pleased to grant Letters of Registration, whereby the exclusive enjoyment and advantage of the said invention or improvement might be secured to him for a period of fourteen years: And I, being willing to give encouragement to all inventions and improvements in the arts or manufactures which may be for the public good, and having received a report favourable to the prayer of the said Petition, from competent persons appointed by me to examineand consider the matters stated therein and to report thereon for my information, am pleased, with the advice of the Executive Council, and in exercise of the power and authority given to me by the said Act of Council, to grant, and do by these Letters of Registration grant unto the said Charles Adolphus Watkins, his executors, administrators, and assigns, the exclusive enjoyment and advantage of the said invention or improvement, for and during the term of fourteen years from the date hereof; to have, hold, and exercise unto the said Charles Adolphus Watkins, his executors, administrators, and assigns, the exclusive enjoyment and advantage thereof, for and during and unto the full end and term of fourteen years from the date of these presents next and immediately ensuing, and fully to be complete and ended: Provided always, that if the said Charles Adolphus Watkins shall not, within three days after the granting of these Letters of Registration, register the same in the proper office in the Supreme Court, at Sydney, in the said Colony of New South Wales, then these Letters of Registration, and all advantages whatsoever hereby granted, shall cease and become void.

In witness whereof, I have hereunto set my sign manual, and have caused the present Letters of Registration to be sealed with the seal of the said Colony of New South Wales, at Government House, Sydney, in New South Wales, this nineteenth day of January, in the year of our Lord one thousand eight hundred and eighty.

[L.S.] AUGUSTUS LOFTUS.

Improvements in the manufacture of Brushes, &c.

SPECIFICATION of CHARLES ADOLPHUS WATKINS, of the firm of Hamilton and Company, of Greek-street, Soho, in the county of Middlesex and Kingdom of England, brush manufacturers, for "Improvements in the manufacture of Brushes, and in the Apparatus employed therein," that is to say:—

MY said invention relates to the manufacture of brushes intended more particularly to be used for painting, varnishing, distempering, and whitewashing, but it is also applicable to the manufacture of brushes of other descriptions, such for example as are used for tar, gluing, stencilling, shaving, pastry-glazing, and the like. By its use the bristles or fibres are attached to the handle and socket of round and oval painting brushes, without driving the handle through the bristles as is now practised, whilst at the same time the attachment is rendered more secure than by any of the methods now employed, and the brushes produced according to my invention possess working qualities superior to those made by the existing methods. In the case moreover of distemper and whitewash brushes, having one two or more knots, they are manufactured in a more secure manner than by tying the said knots according to the ordinary method.

In order to render the novelty and utility of my said invention more apparent, I shall first briefly describe one of the processes of manufacture heretofore employed, and shall then proceed more particularly to describe my said invention, reference being had to the several figures on the accompanying sheet of drawings, the same letters on which indicate corresponding parts in all the figures.

Previously to this date, both round and oval painting brushes, known as dusters and ground brushes, have generally been made by tying a weighed quantity of bristles in a knot or bundle, cementing their root ends, and inserting the knot in a socket or ferrule similar to C, figure 1. A block of wood with a central hole, similar to B, figure 2, is then pushed into the ferrule and the roots of the bristles brought against its face, *b*.

The tie on the knot is then cut, and the pointed end of a conical handle similar to A, A^1, figure 2, is pushed from flag to root through the centre of the bristles and hole in the block until moderately tight, when it is driven home by striking the butt with a hammer or other means, while the brush is placed on a firm heavy bench with suitable holes in it.

Brushes thus made are liable to three serious defects, which interfere with their security and proper working:—

1. The bulk of the same weight of bristles varies with different dressings and qualities, the handles are rarely all the same size, while the ferrules are invariably alike, therefore the tightness or soundness of the brushes is uncertain, and the bristles frequently become loose after the brushes have been in use some time.
2. The handles are not always driven into the position they should occupy. In reference to the ferrule, sometimes the handle is not driven to a sufficient distance, so that the butt projects beyond the edge of the ferrule, in which case the bristles are caused to spread open, instead of closing over the handle; at other times it is driven to an undue extent, when the brush is unsound through insufficient grip on it.
3. Driving the handle through the bristles occasionally causes some of them to be drawn or dragged with it into the block, which produces a hole in the centre of the brush, making it weaker there than at the outside.

Brushes with this defect will never wear with an even edge, the middle wearing away faster than the outside, thus producing what is known as "forking" in the brush. Although a great variety of sockets, ferrules, rings, and bindings are used in the manufacture of these brushes, the handles are always driven in, and they are consequently liable to the above defects.

In carrying out my said invention in the manufacture of round brushes so as to obviate the defects before enumerated, I employ similar handles, A, A^1, and blocks, B, and similar ferrules, C, to those hereinbefore referred to, and illustrated respectively in figure 2 and figure 1 of the accompanying drawings, but in lieu of the handles and blocks being separate, as is necessarily the case in the driven brushes, I either glue or otherwise fasten them together before making the brushes, or I turn them in one piece out of the solid, so that the butt of the handle forms a peg, A, projecting a determined length beyond the block B, for a given size brush, as shown in figure 2.

The relative diameter of the peg and thickness of the block will depend entirely on the pattern and quality of the brush as at present, but the length of the peg A and thickness of the block B together should be about $\frac{1}{16}$ inch less than the length of the ferrule.

The ferrule C, figure 1, is drawn as being conical, which shape I prefer, but it may be cylindrical, in which case the block should be turned to correspond. The ferrules may be made of cast or rolled metal tube, string, or wire, but I prefer those made of soldered wire, as described in the specification to Letters Patent granted to me, dated March twenty-second, one thousand eight hundred and fifty-nine, No. 733. Having tied the weighed quantity of bristles in a knot and cemented the root ends, I insert the peg A into the centre of the cemented roots, which are held abutting on the block B, and firmly tie them to the peg A, by binding or winding twine or wire round them, as near the roots as possible. Figure 3 shows the brush thus bound, D being the binding, which should be from about $\frac{1}{4}$ to $\frac{3}{8}$ of an inch deep, and E, the knot before referred to. I prefer to use wire for the binding, as it occupies less space than twine for the same tensile strength, and it can be more easily fastened, either by twisting the two ends together or soldering the turns of wire together. The wire may be round, square, or flat.

The binding of the bristles of the peg A can be effected by hand in the ordinary manner of tying brushes, but when they are large it is more convenient during binding to hold the bristles, peg, and block together in a vice with jaws shaped to fit the brush as hereinafter described.

The knot of bristles having thus been bound to the peg A, and the tie being still on the knot of bristles as shown at E, figure 3, the ferrule C is easily slipped over it, and pushed down until it completely covers the block B, to which it is then pinned or nailed, the tie E is then cut, and the brush is complete, as shown in figure 4. The object of using the ferrule or socket over the binding D is to protect the inner binding D from injury, and to secure additional strength to the brush by connecting it at the binding D to the block B, and forming a species of wall round the base of the brush, which prevents any movement

movement of the bristles at the root end while in use, which movement might otherwise arise from the leverage of the long bristles acting on the narrow binding D as a fulcrum.

The brush should be made in such a manner that the block B and the exterior of the binding D both fit the inside of the ferrule C at their respective places, and it is advisable to make them fit rather tightly, so that pressure is required to force the ferrule on.

When a vice is employed as before mentioned for the purpose of holding the bristles, peg, and block together during the operation of binding, I prefer, in order to secure a more regular tension on the wire (for example) than can be obtained by hand-tying, to arrange the vice at the end of a hollow mandril so that the brush can be rotated. The end of the wire having been secured to the vice, the wire is gathered on to the brush as it rotates, the required tension being obtained by running the wire through the hand or between friction plates or other well-known contrivance for producing tension.

Figures 5 and 6 represent the form of vice which I prefer for this work; figure 5 being a front elevation, and figure 6 a side elevation of the machine. F F are base and standards supporting the hollow mandril G, which is caused to revolve by the act of operating a winch handle H fixed at one end. Attached to the other end of the mandril is a solid disc, I, with projections, *a* a^1, cast on it. On a reduced portion of this disc, at *c*, is fitted a toothed ring, K, similar to the rim of a crown wheel, and which is free to revolve round the disc, handles, *d d*, being provided for the convenience of turning it. The vice consists of two plates or jaws, L L^1, overlapping each other, and so shaped that when placed in the position shown in the drawing, an opening, *e*, is left between the jaws concentric with the mandril, and of the size and shape of the brush to be made. The plates L L^1 are fixed to the blocks M M^1, which slide in grooves in the projections *a* a^1; and are moved to and fro by screws working in the blocks M M^1, and indicated in the drawing by the dotted lines below the plates L L^1, such screws turning in fixed bearings at *f* f^1, and being respectively keyed to the pinions M M^1 which gear into the toothed ring K. By revolving the toothed ring K in one direction, say to the left, motion is imparted through the intervention of the pinions to the screws, and the plates L L^1 are caused to slide away from each other and increase the size of the opening *e*. When this is sufficiently large the brush handle is inserted into the hole in the mandril at f^2, the block B, figure 2, resting on its end, which is adjusted to allow the peg A to project a short distance beyond the plates L L^1; the bristles are then inserted in the opening *e* around the peg, after which the toothed ring K is turned back, say to the right, and a motion in the reverse direction of that previously produced being transmitted through the pinions to the screws, the jaws L L^1 are fixed together until the bristles are firmly held between them, when the wire which has been attached to the pin O is wound on the brush by turning the handle H, and is finally secured as before mentioned. A catch may be provided for retaining the handle in position. These binding machines may be made with more than two jaws when necessary, and they may also be made with one fixed and one movable jaw, but time is saved by moving both jaws simultaneously.

When a rotating mandril is not used, a vice constructed in the manner hereinbefore described may still be employed.

In carrying out the operation of applying the ferrule to the brush in course of formation it is necessary, if the ferrule be made of thin metal, fine wire, string, or similar material, to protect it while the brush is forced in, and for this purpose I employ a ferrule-holder, shown at P, in the sectional elevation, figure 7. This holder consists of a flanged socket turned inside to fit the ferrule, and divided into halves or segments along its central axis, which halves or segments are held together by a band Q and set screw *g* or other suitable means, so that the parts can be readily clamped or separated. The ferrule and brush are pushed into the clamped holder as far as they will enter, and the brush is forced home by pressure on the block B, such pressure being most conveniently applied by means of a small screw-press, as in figure 7. The bed plate of this press is made with a slot or opening at R through its entire thickness for such distance as will allow the brush to be placed centrally with the screw S, and the holder and brush are slid into position over this slot between the guides T T fixed on the bed. Attached to the press screw S is a forked plunger, U, of sufficient length to escape the brush-handle A^1 and allow its two ends to press upon the washer V, covering the block; by turning down the screw S, the brush is forced into the ferrule until it covers the block. In order to release the brush the plunger is drawn up, the holder P and clamp Q are slid forward, and the set screw *g* is unscrewed, which relieves the two halves of the holder and allows the brush to be withdrawn.

When the ferrule is made of thick metal or large wire not requiring protection the holder may be dispensed with, the press being, however, by preference still employed; the ferrule then rests upon a plate which slides between the guides T T, and has a hole the same shape and size as the inside of the ferrule, so as to allow the bristles to pass through. Although I prefer to use the binding machine and the press as separate machines, they may be combined in one machine by making the press larger and the vice with three or more plates or jaws. In this case the bed of the press is so arranged as to allow the mandril G, figure 6, to pass through its centre and revolve under the press screw S, so that the disc I carrying the vice is parallel to the bed. The operation of binding is then similar to that hereinbefore described, with the exception that the brush is placed vertically in the vice when the brush is bound, the ferrule and holder are forced down, the jaws of the vice being open, to allow the ferrule to pass over the block.

The process of making oval brushes is similar to that hereinbefore described as applied to round brushes,—oval blocks, handles, and ferrules being simply substituted for round ones; the peg A, however, is provided with a thin plate of wood or metal which is inserted in a saw-cut made down it in the long axis of the oval, as shown at E^1 in the perspective view, figure 8, and plan, figure 9. The object of the plate or feather is to bear the strain of the tie during binding, which without it would cause the brush to assume a circular instead of an oval shape.

I have fully described the manufacture of brushes having a block or backing of wood, because they are the kind most generally made, but the same process is applicable to the manufacture of all painting brushes made in a ferrule socket or binding without the block.

When brushes are made by my process without the block the bristles, after being cemented, are at once bound as already described to the handle, as near the butt end as possible, after which the ferrule is forced on nearly level with the roots, which are then singed as usual. Oval brushes without the block merely require the metal feather inserted across the handle about as far as the bristles reach. They are bound and finished in the same manner as round brushes.

For

Improvements in the manufacture of Brushes, &c.

For making cheaper dusters and ground brushes, either round or oval, in which the saving of time is a considerable object, I dispense with the binding operation, and secure the brush by simply forcing the ferrule on to the bristles, peg, and block. Having fastened the block B and handle A A^1 together (figure 2), I take the proper quantity of bristles, tied in a knot, and cemented as before, insert the peg A into the centre, and slip the ferrule with its holder over the bristles as far as it will go. The brush is now placed bristle upwards on a plate with a hole in it of just sufficient size to receive the handle at its junction with the block B at b^1. This plate rests on the bed of the press, and with the brush is slid between the guides T T until it is just under the screw S. Pressure is applied by the plunger U to the ferrule holder, forcing the ferrule down the bristles until it covers the block, the screw is then reversed, the ferrule-holder unclamped, and the brush withdrawn. The brush thus produced is equally as tight as a similar one made by driving in the handle, but a saving of time is effected, and the brush is free from the defect of "dragging" so common with driven brushes.

When the roots of the bristles are large the brush will be more conveniently made by combining the press and vice in one machine, so that the roots may be firmly held to the peg until the ferrule is brought down to the plates or jaws of the vice, which are then opened to allow the ferrule to pass on to the block. For this purpose the vice is fixed to the bed of the press, as it is not required to revolve.

Brushes can be made in the press with the bristle downwards, the holder being used in the same manner as for those brushes which have been first bound to the peg, but I prefer to make them bristle upwards, because their weight maintains them in their place on the block.

Distemper and whitewash brushes having either one, two, three, or four knots of bristles or fibre to each brush on a flat handle, have hitherto been made by tying or winding wire or string round each knot separately, saw-cuts being made in the handles to allow the wire to be wound on to the portions of the handle occupied by the knot.

In carrying out my invention as applied to the manufacture of brushes of this description, I make these brushes by forcing the ferrules on to the knot or knots of bristles and handle while they are held on the bed of the screw-press, in a similar manner to the oval and round brushes hereinbefore described, in the manufacture of which the binding is dispensed with. For a two-knot brush a saw-cut, *h*, figure 10, is made across the blade W of the handle along its central line for (say) about one inch in depth, the width of the cut being equal to about twice the thickness of the metal of which the ferrules are made, so as to allow the two ferrules to pass along the slit together. The handle is placed in a clamp or holder, X, figure 10, formed of thick metal plate bent round, but leaving a space for the handle between its sides, which terminate in rectangular flanges, *i i*, intended to rest on the bed of the press and slide between the guides T T, figure 7. The distance from the flanges to the bottom of the clamp is such that when the small end of the handle rests on the bottom of the clamp, the blade W of the handle stands (say) about 1 inch above the flanges, on which stops, *k*, are formed for the purpose of maintaining the handle in position. The ferrule-holder for this brush is made to hold two ferrules side by side in the position which they are to occupy on the handle; the knots of bristle having been tied up and cemented, are placed in the ferrules, which are then inserted in the holder, the roots of the bristles projecting (say) from about $1\frac{1}{2}$ to 2 inches; a long knife is passed through the bristles of both knots, by which the bristles are opened so as to be placed equally on each side of the handle W, the roots are pressed down on the flanges *i i*, and the whole clamp, brush, and ferrule-holder slid under the forked plunger U, figure 7, which, by being screwed down forces the two ferrules on together, perfectly securing the bristles to the handle. After removing the brush, the ferrules are pinned to the handle as before. Two pins, *l l*, projecting from the flanges *i i*, are provided to serve as guides by passing through corresponding holes in the ferrule-holder. In the case of brushes of this description having one knot or a greater number of knots than two, the ferrule-holders are adapted to hold the corresponding number of ferrules. It is obvious that the converse of the method hereinbefore described may be adopted, that is to say, the ferrule-holder and bristles may be placed on the bed plate and the handle forced into them by the plunger U being brought to bear on the handle clamp, figure 10.

Having now described and particularly ascertained the nature of my said invention, and the manner in which the same is or may be used or carried into effect, I would observe, in conclusion, that what I consider to be novel and original and therefore claim is,—

First—The system or mode of manufacturing brushes by first securing the bristles or equivalent material to a handle by tying or binding the same thereto, and then inserting the brush thus partially formed in a ferrule or socket, substantially as hereinbefore described.

Second—In the manufacture of oval brushes, the employment of a feather or blade across the handle when the bristles or their equivalents are secured to such handle, by tying or binding them thereto before inserting them into the ferrule or socket, substantially as hereinbefore described.

Third—The system or mode of manufacturing brushes of the class technically known as "dusters" or "ground brushes," by forcing the ferrule or socket on to the bristles or their equivalents, the handle and the block, in lieu of driving the handles into the partially formed brush, substantially as hereinbefore described.

Fourth—The vice or machine with two or more sliding plates or jaws for holding the brush during tying or binding the same, being either used alone for hand-tying or combined with a rotating mandril, substantially as hereinbefore described.

Fifth—The combination of a ferrule-holder with a screw-press, the parts being arranged and combined substantially in the manner and for the purpose hereinbefore described.

Sixth—The combination of a vice or holding machine constructed as herein set forth, and of a screw-press, substantially as and for the purposes hereinbefore described.

Seventh—

Seventh—The system or mode of manufacturing brushes having one or more knots of bristles or fibre by forcing a ferrule or ferrules on to the knots and handles, or *vice versa*, in lieu of winding wire or string round the knot or round each knot separately, substantially as hereinbefore described.

In witness whereof, I, the said Charles Adolphus Watkins, have to this my specification set my hand and seal, this ninth day of October, one thousand eight hundred and seventy-nine.

CHAS. A. WATKINS.

Signed and sealed in the presence of—
CHAS. MILLS,
47, Lincoln's Inn Fields, London.

This is the specification referred to in the annexed Letters of Registration granted to Charles Adolphus Watkins, dated this nineteenth day of January, A.D. 1880.

AUGUSTUS LOFTUS.

REPORT.

Sir, Sydney, 22 December, 1879.

We do ourselves the honor to state that we are of opinion that Letters of Registration may issue in favour of Mr. Charles Adolphus Watkins, for "Improvements in the manufacture of Brushes, and Apparatus employed therein," in accordance with his Petition, drawings, specification, and claim, transmitted for our report under your blank cover communication of the 15th instant, No. 9,847.

We have, &c.,
GOTHER K. MANN.
EDMUND FOSBERY.

The Principal Under Secretary.

[Drawings—one sheet.]

No. 796.

[Assignment of No. 782. See Letters of Registration for 1879, page 173.]

No. 797.

[Assignment of No. 779. See Letters of Registration for 1879, page 163.]

No. 798.

[Assignment of Nos. 779 and 782.]

FIG. 1.

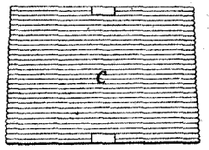

FIG. 2.

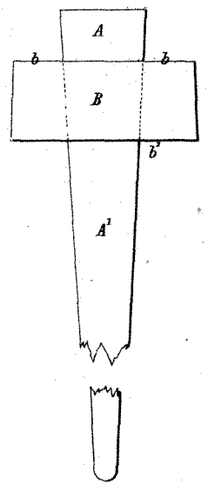

FIG. 3.

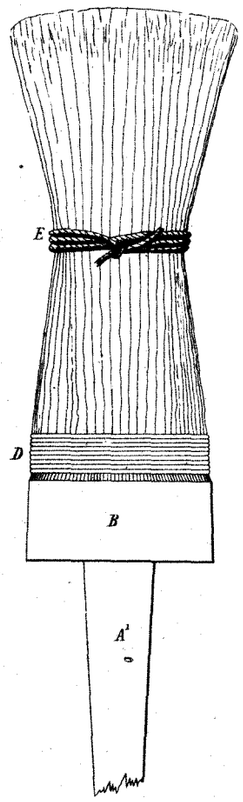

FIG. 4.

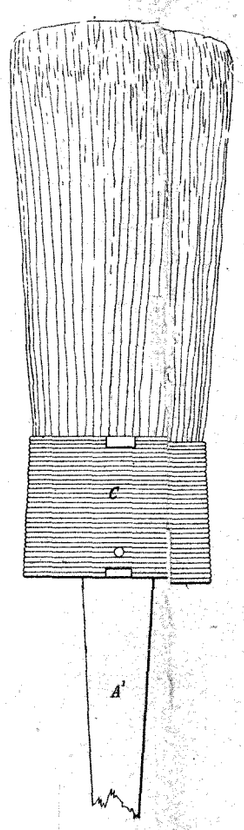

FIG. 5.

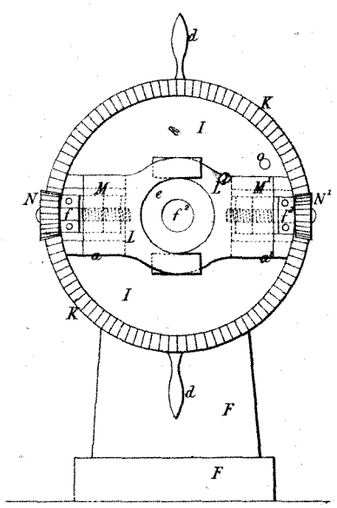

FIG. 6.

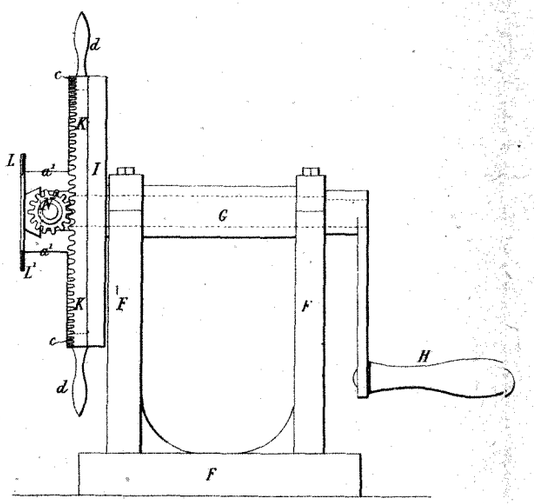

FIG. 7.

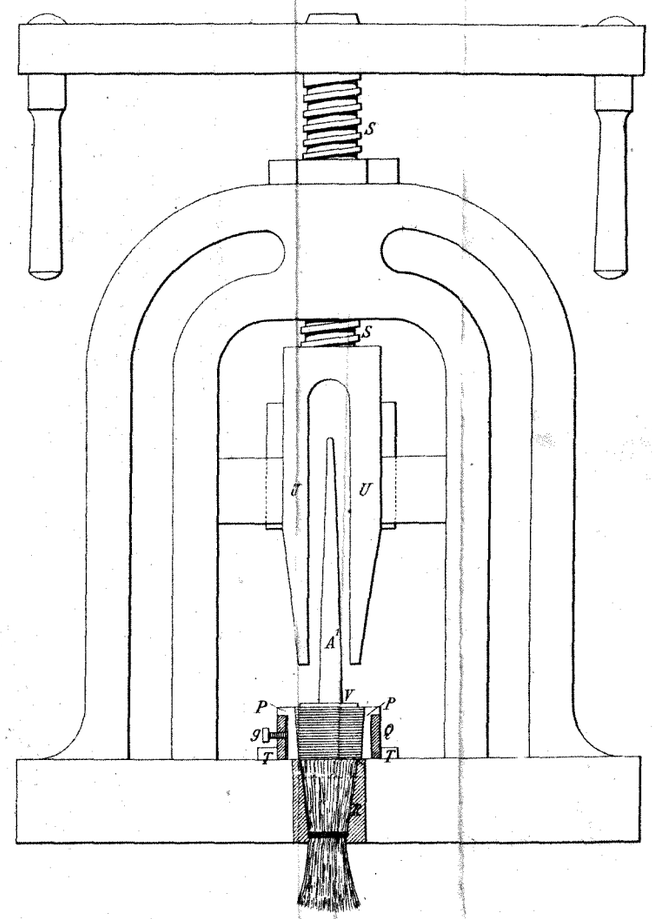

FIG. 9.

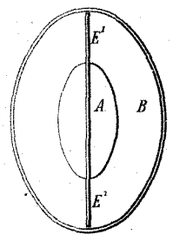

FIG. 8.

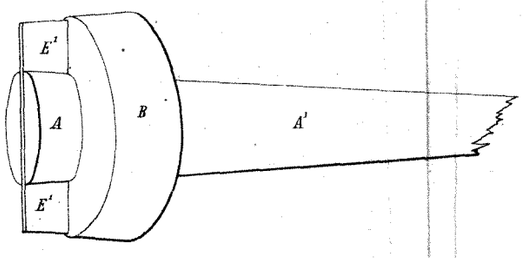

FIG. 10.

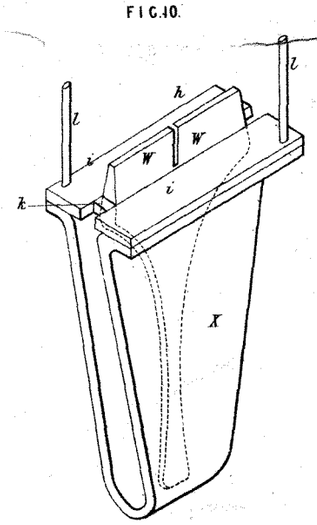

Malby & Sons Lith.

PHOTO-LITHOGRAPHED AT THE GOVT. PRINTING OFFICE,
SYDNEY, NEW SOUTH WALES.

This is the Sheet of Drawings referred to in the annexed Letters of Registration, granted to Charles Adolphus Watkins, this nineteenth day of January, A.D. 1880.

Augustus Loftus.

(Sig. 357.)

A.D. 1880, 27*th January*. No. 799.

PROCESS FOR PARTY-COLOURED PRINTING BY SINGLE OPERATION.

LETTERS OF REGISTRATION to James Gardner, for a Process for party-coloured printing by single operation.

[Registered on the 28th day of January, 1880, in pursuance of the Act 16 Vic. No. 24.]

BY HIS EXCELLENCY the Right Honorable SIR AUGUSTUS WILLIAM FREDERICK SPENCER LOFTUS (commonly called LORD AUGUSTUS LOFTUS), Knight Grand Cross of the Most Honorable Order of the Bath, a Member of Her Majesty's Most Honorable Privy Council, Governor and Commander-in-Chief of the Colony of New South Wales and its Dependencies.

TO ALL TO WHOM THESE PRESENTS SHALL COME, greeting:

WHEREAS JAMES GARDNER, of Young, in the Colony of New South Wales, compositor, hath by his Petition humbly represented to me that he is the author or designer of a certain invention or improvement in manufactures, that is to say, of an invention of "A process for party-coloured printing by single operation," which is more particularly described in the amended specification which is hereunto annexed; and that he, the said Petitioner, hath deposited with the Honorable the Treasurer of the said Colony of New South Wales the sum of Twenty Pounds sterling, for defraying the expense of granting these Letters of Registration, as required by the Act of Council, sixteenth Victoria, number twenty-four; and hath humbly prayed that I would be pleased to grant Letters of Registration, whereby the exclusive enjoyment and advantage of the said invention or improvement might be secured to him for a period of fourteen years: And I, being willing to give encouragement to all inventions and improvements in the arts or manufactures which may be for the public good, and having received a report favourable to the prayer of the said Petition, from competent persons appointed by me to examine and consider the matters stated therein and to report thereon for my information, am pleased, with the advice of the Executive Council, and in exercise of the power and authority given to me by the said Act of Council, to grant, and do, by these Letters of Registration, grant unto the said James Gardner, his executors, administrators, and assigns, the exclusive enjoyment and advantage of the said invention or improvement, for and during the term of fourteen years from the date hereof; to have, hold, and exercise unto the said James Gardner, his executors, administrators, and assigns, the exclusive enjoyment and advantage thereof, for and during and unto the full end and term of fourteen years from the date of these presents next and immediately ensuing, and fully to be complete and ended: Provided always, that if the said James Gardner shall not, within three days after the granting of these Letters of Registration, register the same in the proper office in the Supreme Court, at Sydney, in the said Colony of New South Wales, then these Letters of Registration, and all advantages whatsoever hereby granted, shall cease and become void.

In witness whereof, I have hereunto set my sign manual, and have caused the present Letters of Registration to be sealed with the seal of the said Colony of New South Wales, at Government House, Sydney, in New South Wales, this twenty-seventh day of January, in the year of our Lord one thousand eight hundred and eighty.

[L.S.]

AUGUSTUS LOFTUS.

A.D. 1880. No. 799.

Process for party-coloured printing by single operation.

TO ALL TO WHOM THESE PRESENTS SHALL COME: I, JAMES GARDNER, of Young, New South Wales, compositor, send greeting:

WHEREAS I am desirous of obtaining Letters of Registration for securing unto me Her Majesty's special license that I, my executors, administrators, and assigns, or such others as I or they should at any time agree with, and no others, should and lawfully might from time to time, and at all times during the term of fourteen years, to be computed from the day on which this instrument is left at the office of the Colonial Secretary, at Sydney, make and exercise, use and vend, within the Colony of New South Wales, an invention consisting of certain mechanical contrivances and additions to the usual inking apparatus of all types and other surface printing machines and presses, whereby printing can be executed in two or more colours at the one impression, instead of at separate impressions for each differently coloured ink, as at present, such contrivance being more fully described in the specification herewith, as follows:—

SPECIFICATION.

THE ink duct or reservoir to be used will be divided by any mechanical arrangement into either two or more portions of any required width, and the party-coloured inks in which the printing is to be effected will be distributed or transferred to the inking-table in parallel lines, separate, conjoined, or blended, either by doctor roller or by hand-roller, with or without a gauge.

The rolling of the type-form or lithographic stone from such ink-table will be by means of rollers charged as above with party-coloured inks, whose surface presents the same sequence of colours as originally taken from ink duct or reservoir, or from the inking-table.

These paragraphs have reference to printing in letter-press and lithography, by either cylinder or platen machines, or by hand-presses, in either two or more colours at the one impression.

The mechanical arrangements necessary are as follows:—

For machines—
- A gauge for division of ink duct as required.
- A gauge for determining the parallelism of lines of colour on inking-table.
- Guide to secure inking and distributing rollers in their respective positions.

For hand-presses—
- A gauge for division of ink duct as required.
- A gauge for determining the parallelism of lines of colour on inking-table.
- A guide to secure the hand-roller in proper position on inking-table.
- A guide to secure the hand-roller in proper position in form.
- A swivel, fixed either in or to chase, press, platen, or any other appliance, for obtaining the result of concentric or segmental party-colouring.

Having set forth the nature of my invention or improvement, I claim specially that by such means the time and labour of separate inkings is obviated, and the work performed by a single operation.

In witness whereof I, the said James Gardner, have hereunto set my hand and seal, this twenty-first day of August, in the year of our Lord one thousand eight hundred and seventy-nine.

JAMES GARDNER.

Witness—J. R. EDWARDS, C.P.S., Young.

I claim also specially the process herein described,—

ROBERT SANDS,
Agent and Assignee.

Witness—HENRY HALLORAN.

My desire is that the Letters of Registration may issue to James Gardner, as applied for.

ROBERT SANDS.

This is the amended specification referred to in the annexed Letters of Registration granted to James Gardner, this twenty-seventh day of January, A.D. 1880.

AUGUSTUS LOFTUS.

REPORTS.

Sir,

Sydney, 3 October, 1879.

We have the honor to return the papers having reference to Mr. James Gardner's application for Letters of Registration for a "Process of party-coloured printing by single operation," and to recommend that the applicant be advised to alter the claim at the end of his specification. As the claim now stands, it does not indicate what he wishes to specifically secure, but only points out that there is an advantage in the arrangement he proposes. The claim should be so worded as to secure what the applicant considers novel, or he should claim the whole substantially as set forth in the description.

We have, &c.,
CHAS. WATT.
THOS. RICHARDS.

The Principal Under Secretary.

Sir,

Sydney, 16 October, 1879.

We do ourselves the honor to return herewith the papers having reference to Mr. James Gardner's application for Letters of Registration for a "Process of party-coloured printing," and to state that we now see no objection to the issue of Letters of Registration to the applicant for the process as described.

We have, &c.,
CHAS. WATT.
THOS. RICHARDS.

The Principal Under Secretary.

A.D. 1880, 10*th February*. No. 800.

IMPROVED VENTILATORS AND CHIMNEY-TOPS.

LETTERS OF REGISTRATION to Henry Melvill Williams, for Improved Ventilators and Chimney-tops.

[Registered on the 11th day of February, 1880, in pursuance of the Act 16 Vic. No. 24.]

BY His Excellency the Right Honorable Sir Augustus William Frederick Spencer Loftus (commonly called Lord Augustus Loftus), Knight Grand Cross of the Most Honorable Order of the Bath, a Member of Her Majesty's Most Honorable Privy Council, Governor and Commander-in-Chief of the Colony of New South Wales and its Dependencies.

TO ALL TO WHOM THESE PRESENTS SHALL COME, greeting:

WHEREAS Henry Melvill Williams, of No. 13, St. Andrew-street, in the City of London, in England, gentleman, hath by his Petition humbly represented to me that he is the author or designer of a certain invention or improvement in manufactures, that is to say, of an invention entitled "Improved Ventilators and Chimney-tops," which is more particularly described in the specification and the sheet of drawings which are hereunto annexed; and that he, the said Petitioner, hath deposited with the Honorable the Treasurer of the said Colony of New South Wales the sum of Twenty Pounds sterling, for defraying the expense of granting these Letters of Registration, as required by the Act of Council, sixteenth Victoria, number twenty-four; and hath humbly prayed that I would be pleased to grant Letters of Registration whereby the exclusive enjoyment and advantage of the said invention or improvement might be secured to him for a period of fourteen years: And I, being willing to give encouragement to all inventions and improvements in the arts or manufactures which may be for the public good, and having received a report favourable to the prayer of the said Petition, from competent persons appointed by me to examine and consider the matter stated therein and to report thereon for my information, am pleased, with the advice of the Executive Council, and in exercise of the power and authority given to me by the said Act of Council, to grant, and do by these Letters of Registration grant unto the said Henry Melvill Williams, his executors, administrators, and assigns, the exclusive enjoyment and advantage of the said invention or improvement, for and during the term of fourteen years from the date hereof; to have, hold, and exercise unto the said Henry Melvill Williams, his executors, administrators, and assigns, the exclusive enjoyment and advantage thereof, for and during and unto the full end and term of fourteen years from the date of these presents next and immediately ensuing, and fully to be complete and ended: Provided always, that if the said Henry Melvill Williams shall not, within three days after the granting of these Letters of Registration, register the same in the proper office in the Supreme Court, at Sydney, in the said Colony of New South Wales, then these Letters of Registration, and all advantages whatsoever hereby granted, shall cease and become void.

In witness whereof, I have hereunto set my sign manual, and have caused the present Letters of Registration to be sealed with the seal of the said Colony of New South Wales, at Government House, Sydney, in New South Wales, this tenth day of February, in the year of our Lord one thousand eight hundred and eighty.

[L.S.] AUGUSTUS LOFTUS.

A.D. 1880. No. 800.

Improved Ventilators and Chimney-tops.

SPECIFICATION of Henry Melvill Williams, of No. 13, St. Andrew-street, in the City of London, in England, gentleman, for an invention entitled "Improved Ventilators and Chimney-tops."

THIS invention relates to an improved ventilating apparatus, consisting of tops for ventilating shafts and chimney flues, the said tops being constructed substantially in the manner hereinafter described, so that by the action of the wind in passing over or through them an upward current is created in the shafts or flues and all injurious down draughts therein are prevented.

In order that the nature of the invention may be readily understood I have illustrated it in the annexed drawings, and will proceed to describe in detail the manner in which the said improved ventilators and chimney-tops are constructed. Figure 1 is a side elevation of a ventilator or chimney-top made according to the invention, figure 2 is a plan, and figures 3 and 4 are vertical sections thereof. The same letters of reference indicate the same parts in all the figures.

A is a tube, being in itself or being fixed on a ventilating shaft or chimney flue. I provide it at its upper end with a hollow enlargement or chamber, B, in form substantially as shown in the drawings, and having an opening, *b*, at its top of the same or about the same diameter as the interior of the tube A. C is a cap mounted on supports, D, rising above the chamber B, the underside of the cap C being placed at a certain distance above the opening *b*, varying according to circumstances; but the distance for producing the best effect can easily be ascertained by experiment. In each case the relative proportions and shapes shown in the drawings will be found to give good results. The cap C is in form of a segment of a sphere, its upper surface being rounded and its underside, *c*, flat, or nearly so. The diameter of the cap C is greater than that of the opening *b*, but less than that of the enlargement B. The tube A, chamber B, and cap C may be constructed of sheet iron, zinc, pottery, or other suitable material. The curved or rounded surfaces of the cap C and enlargement B deflect the wind, whether it blow horizontally or otherwise, or downwards upon the top of the cap, with the effect that a current is created upwards through the shaft or flue and outwards between B and C, as indicated by the arrows in figures 3 and 4 respectively.

When the proportions and shapes of the several parts, that is to say, the tube, the cap, and the chamber, are made as described and shown in the drawings, or thereabouts, they will be found to answer the purpose, though, as is obvious, some of the parts may be modified, and the other parts within reasonable limits may be correspondingly modified, as will be readily ascertained in practice.

The cap C may be supported, when its distance is properly ascertained, on fixed supports, or the supports D may with advantage be provided with screw threads and nuts, so as to permit of the height of the cap C above the chamber B being varied according to circumstances, as may be found necessary.

I would have it understood that I do not limit myself to the exact form or proportion of the parts as shown in the drawings. Thus, the sphere of which the cap C is a segment may be of relatively longer or smaller diameter, that is to say, the upper side of the cap may have more or less rotundity, or it may be conical. Similarly, the curves of the upper and lower halves of the chamber B may be modified, without departing from the principle of the invention or seriously affecting the efficiency of the apparatus.

Having described the nature of the invention and the manner of applying the same, I declare that what I claim as the invention to be protected by Letters of Registration is—

Firstly—The improved form of ventilators or chimney-tops, constructed with tubular part, enlargement, and cap, substantially as herein described, and illustrated in the drawings annexed.

Secondly—The combination of parts forming the improved ventilating apparatus, consisting of a tube with a hollow spheroidal enlargement, surmounted by a cap having a curved or conical upper surface, and a flat or nearly flat under surface, the diameter of the said cap being less than that of the hollow spheroidal enlargement, but greater than that of its upper orifice, substantially as and for the purposes described.

In witness whereof, I, the said Henry Melvill Williams, have hereto set my hand and seal, this second day of December, one thousand eight hundred and seventy-nine.

H. M. WILLIAMS,
By his Agent, OSWALD BROWN.

Witness—
E. B. COLTON, Adelaide.

This is the specification referred to in the annexed Letters of Registration granted to Henry Melvill Williams, this tenth day of February, 1880.

AUGUSTUS LOFTUS.

REPORT.

Sir,

Sydney, 7 January, 1880.

The application of Mr. H. M. Williams for Letters of Registration for "Improved Ventilators and Chimney-tops" having been referred to us, we have examined the drawings and specification accompanying the same, and have the honor to report that we see no objection to the issue of Letters of Registration as prayed for.

We have, &c.,
JAMES BARNET.
ALFRED ROBERTS.

The Principal Under Secretary.

[Drawings—one sheet.]

Fig. 2.

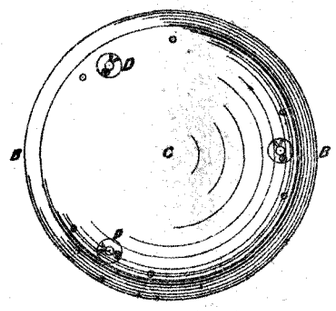

Fig. 1.

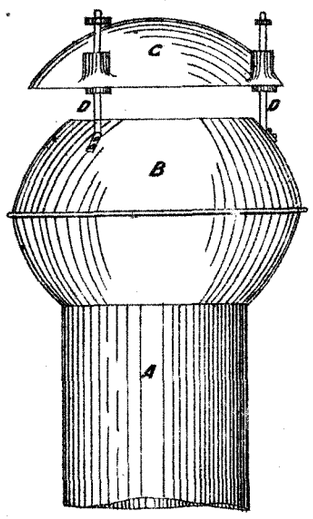

Fig. 3.

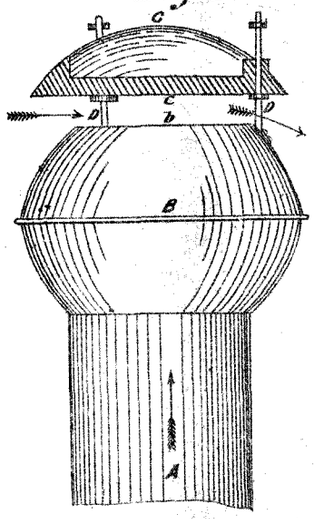

Fig. 4.

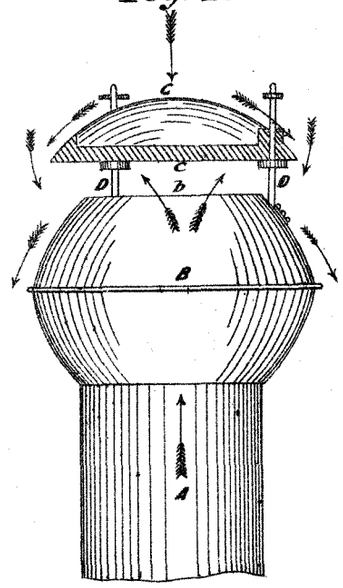

This is the Sheet of Drawings referred to in the annexed Letters of Registration granted to Henry Melvill Williams, this tenth day of February 1880.

Augustus Loftus.

PHOTO-LITHOGRAPHED AT THE GOVT. PRINTING OFFICE, SYDNEY, NEW SOUTH WALES.

A.D. 1880, 20*th February*. No. 801.

IMPROVED PORTABLE ELEVATING AND TIPPING MACHINE.

LETTERS OF REGISTRATION to William Skinner, for an improved portable Elevating and Tipping Machine.

[Registered on the 20th day of February, 1880, in pursuance of the Act 16 Vic. No. 24.]

BY His Excellency the Right Honorable Sir Augustus William Frederick Spencer Loftus (commonly called Lord Augustus Loftus), Knight Grand Cross of the Most Honorable Order of the Bath, a Member of Her Majesty's Most Honorable Privy Council, Governor and Commander-in-Chief of the Colony of New South Wales and its Dependencies.

TO ALL TO WHOM THESE PRESENTS SHALL COME, greeting:

WHEREAS William Skinner, of St. Arnaud, in the Colony of Victoria, barrister-at-law, hath by his Petition humbly represented to me that he is the assignee of John Vinecombe, of Rich Avon East, in the said Colony of Victoria, farmer, who is the author or designer of a certain invention or improvement in manufactures, that is to say, of an invention entitled an "Improved portable Elevating and Tipping Machine," which is more particularly described in the specification and the sheet of drawings which are hereunto annexed; and that he, the said Petitioner, hath deposited with the Honorable the Treasurer of the said Colony of New South Wales the sum of Twenty Pounds sterling, for defraying the expense of granting these Letters of Registration, as required by the Act of Council, sixteenth Victoria, number twenty-four; and hath humbly prayed that I would be pleased to grant Letters of Registration, whereby the exclusive enjoyment and advantage of the said invention or improvement might be secured to him for a period of fourteen years: And I, being willing to give encouragement to all inventions and improvements in the arts or manufactures which may be for the public good, and having received a report favourable to the prayer of the said Petition, from competent persons appointed by me to examine and consider the matters stated therein and to report thereon for my information, am pleased, with the advice of the Executive Council, and in exercise of the power and authority given to me by the said Act of Council, to grant, and do by these Letters of Registration grant unto the said William Skinner, his executors, administrators, and assigns, the exclusive enjoyment and advantage of the said invention or improvement, for and during the term of fourteen years from the date hereof; to have, hold, and exercise unto the said William Skinner, his executors, administrators, and assigns, the exclusive enjoyment and advantage thereof, for and during and unto the full end and term of fourteen years from the date of these presents next and immediately ensuing, and fully to be complete and ended: Provided always, that if the said William Skinner shall not, within three days after the granting of these Letters of Registration, register the same in the proper office in the Supreme Court, at Sydney, in the said Colony of New South Wales, then these Letters of Registration, and all advantages whatsoever hereby granted, shall cease and become void.

In witness whereof, I have hereunto set my sign manual, and have caused the present Letters of Registration to be sealed with the seal of the said Colony of New South Wales, at Government House, Sydney, in New South Wales, this twentieth day of February, in the year of our Lord one thousand eight hundred and eighty.

[L.S.] AUGUSTUS LOFTUS.

Improved portable Elevating and Tipping Machine.

SPECIFICATION of WILLIAM SKINNER, of St. Arnaud, in the Colony of Victoria, barrister-at-law, the assignee of John Vinecombe, of Rich Avon East, in the said Colony, farmer, the inventor of an invention entitled an "Improved portable Elevating and Tipping Machine."

MY machine has been devised for the purpose of facilitating the operation of elevating goods or merchandise of any description from a lower to a higher level, such as for loading drays, railway waggons, or vessels, with bags or sacks of grain, or other material. In such a case the bags or sacks are simply placed on that part of my machine which I call the travelling lift or cradle, and which on being elevated, as hereinafter described, rises to the top of the machine, and tips or cants its load into the vehicle or other receptacle on the other side. In order, however, that my invention may be distinctly understood, I will proceed to refer to the drawings hereto annexed, where the same letters of reference indicate the same parts wherever they occur. Figure 1 represents a front elevation of the stationary part of my machine; figure 2, a plan; and figure 3, a vertical section on the line *a a* in figure 2. Figures 4 and 5 represent front view and vertical section of my travelling lift or cradle, and figure 6 is a perspective view of my machine complete. A A are hardwood skids tied together by iron rods, B; and C and C^1 are two rollers supported by journals in bearings in the skids A, each end of such rollers being bevelled off to allow of the passage of the flanges of the travelling lift or cradle, and the lower one having a handle, C^2, for working the machine. D is a rope or chain, the centre of which passes around a pin, or through an eye, E, fixed to the lower roller C, and the ends of which pass over grooves F, in the upper roller C^1, and then descend to the ground, where there are eyes, D^1, for passing over the hooks G, on the underside of the footboard G^1 of the travelling lift. This footboard is securely fastened to the sides, H, of the travelling lift by strong brackets, G^2. These sides, H, are connected together by cross pieces, I, which are mortised into them. J J are iron flanges firmly fastened to said sides, and have an iron pin, K, in each, which travel in the slots L, made on the inner side of the skids A. The upper end of these slots, it will be noticed, are enlarged and curved backward, so as to allow the tipping action to the load when the travelling lift reaches that point.

If so desired, the pins K and slots L may be dispensed with, although I prefer to retain both these contrivances.

The mode of operation is as follows:—The machine is placed with its feet resting on some solid foundation, such as a floor, or a road, or a platform, and with its upper end resting against the vehicle or chamber, or other receptacle for the material to be elevated, and at such a slope as will ensure the tipping of the material to be elevated, usually about 45 degrees. The load is then placed on the footboard G^1, and the handle C^2 revolved. The rope or chain then winds itself on the lower roller C, elevating the travelling lift with its load to the top of the machine, where it is automatically tipped over into the place prepared for its reception. The travelling lift is then lowered, and the operation is repeated as often as required.

The drawings represent a machine with skids eight feet long. I find this the best size for loading vehicles with ordinary bags or sacks of wheat or oats. It will be noticed that the slots are made one quarter of an inch larger on their upper side, from the point where they begin to turn back, so as to give the pin more play. The slot should be cut about one inch from the upper side of the skids. Longer skids may be used to elevate objects to greater heights, and when necessary for the purpose of elevating objects of greater width a wider machine may be constructed.

The object to be elevated by a travelling lift of the kind shown in the drawings must be something bound up or held together, such as a bag, bale, truss, or bundle. If the objects or articles to be elevated are loose a different form of lift must be used. The distribution of the weight to be elevated must also be taken into consideration, as the cradle will not tip or cant its load unless this is so placed therein that on its arrival at the top of the machine the centre of gravity of the load is brought beyond the top of the lift. A machine of the size shown in the drawings will always operate readily when placed at an angle of 45 degrees to the horizontal, and used to elevate and tip bags of wheat, oats, or other grain of the ordinary market size, the bags being placed end on upon the lift.

Having thus described the nature of my invention and the manner of performing same, I would have it understood that I do not confine myself to the precise shape or size of the several parts of my machine, nor to the materials of which they may be made or manufactured, so long as the nature of my invention be retained, but I claim—

First—The combination of parts forming the stationary part of my machine as shown in figures 1, 2, and 3, and either with or without the pins K and slots L, for the purpose of elevating a travelling lift, whether of the precise construction of my lift or not.

Second—The combination of parts forming my travelling lift as shown in figures 4 and 5, and its combination with the stationary part of my machine, as shown in figures 1, 2, and 3, in the manner and for the purpose substantially as herein described and explained.

In witness whereof, I, the said William Skinner, have hereto set my hand and seal, this second day of January, one thousand eight hundred and eighty.

WILLIAM SKINNER.

Witness—

EDWD. WATERS,
Melbourne, Patent Agent.

This is the specification referred to in the annexed Letters of Registration granted to William Skinner, this twentieth day of February, A.D. 1880.

AUGUSTUS LOFTUS.

REPORT.

Improved portable Elevating and Tipping Machine.

REPORT.

Sir, Sydney, 27 January, 1880.

We do ourselves the honor to state that we are of opinion that Letters of Registration may be granted in favour of Mr. William Skinner, for an "Improved portable Elevating and Tipping Machine," in accordance with the Petition, specification, drawings, and claim transmitted for our report, under your blank cover communication of the 13th instant, No. 183.

We have, &c.,
GOTHER K. MANN.
E. C. CRACKNELL.

The Principal Under Secretary.

[Drawings—one sheet.]

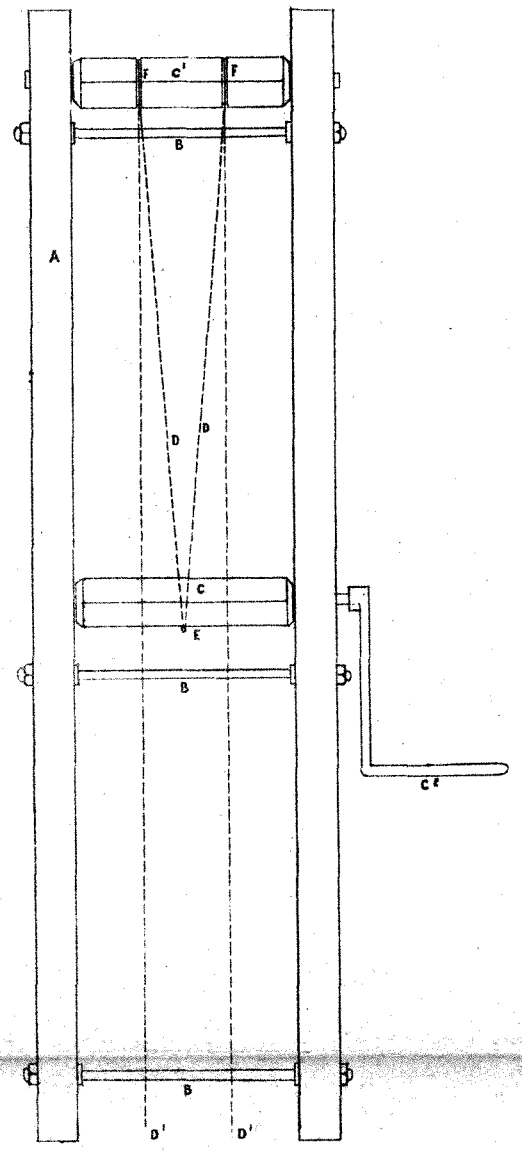

FIG. 1.

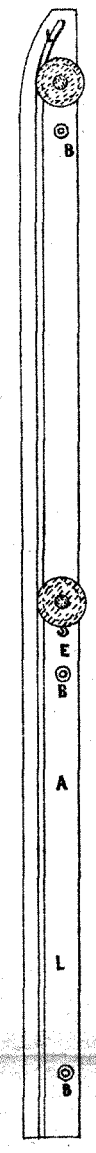

FIG. 3.

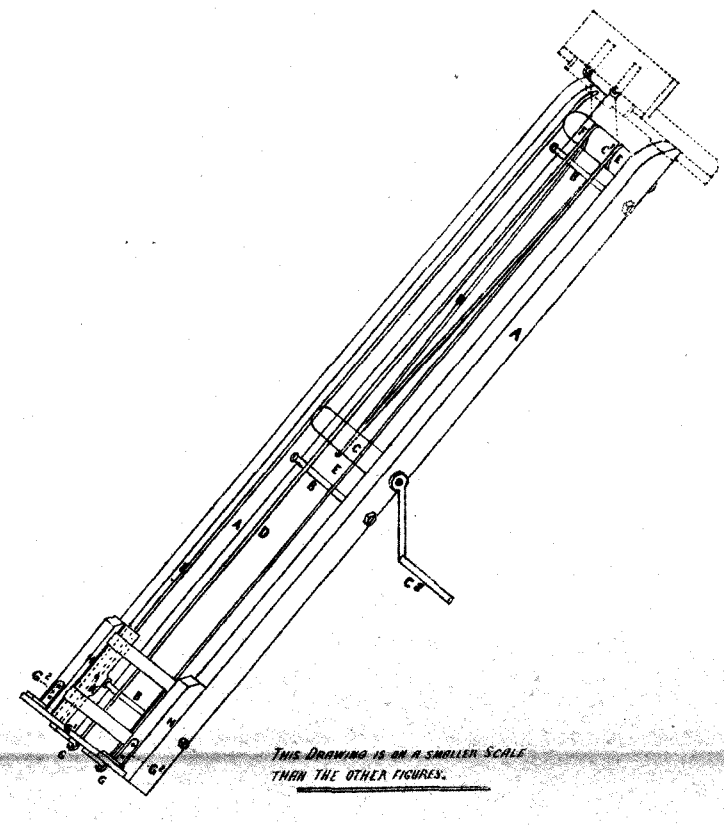

FIG. 6.

THIS DRAWING IS ON A SMALLER SCALE THAN THE OTHER FIGURES.

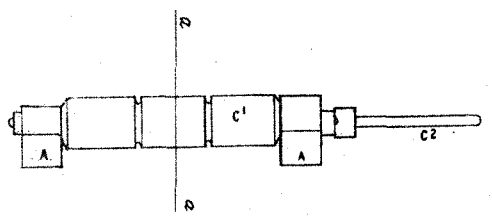

FIG. 2.

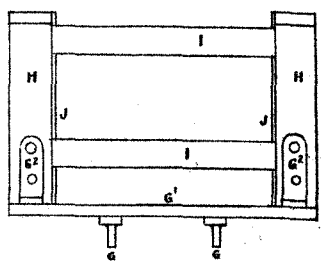

FIG. 4.

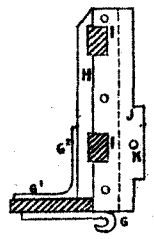

FIG. 5.

SCALE. 1 INCH TO THE FOOT.

PHOTO-LITHOGRAPHED AT THE GOVT. PRINTING OFFICE, SYDNEY, NEW SOUTH WALES.

This is the Sheet of Drawings referred to in the annexed Letters of Registration, granted to William Skinner, this twentieth day of February, A.D. 1880. Augustus Loftus.

(Sig. 357)

1880, 20*th February.* No. 802.

JOSEPH, MUIR, AND BENSUSAN'S IMPROVED AMALGAMATING ALKALINE PROCESS.

LETTERS OF REGISTRATION to Henry Joseph, John Matthew Muir, and Samuel Levy Bensusan, for an invention for the prevention of sickening of mercury and loss of gold during amalgamation of auriferous ores, &c.

[Registered on the 20th day of February, 1880, in pursuance of the Act 16 Vic. No. 24.]

BY HIS EXCELLENCY THE RIGHT HONORABLE SIR AUGUSTUS WILLIAM FREDERICK SPENCER LOFTUS (commonly called LORD AUGUSTUS LOFTUS), Knight Grand Cross of the Most Honorable Order of the Bath, a Member of Her Majesty's Most Honorable Privy Council, Governor and Commander-in-Chief of the Colony of New South Wales and its Dependencies.

TO ALL TO WHOM THESE PRESENTS SHALL COME, greeting:

WHEREAS HENRY JOSEPH and JOHN MATTHEW MUIR, both of Gympie, in the Colony of Queensland, analytical chemists, assayers, and auriferous refuse treaters, and Samuel Levy Bensusan, of Sydney, in the Colony of New South Wales, metallurgist, have by their Petition humbly represented to me that they are the authors or designers of a certain invention or improvement in manufactures, that is to say, of an invention for the "Prevention of sickening of mercury and loss of gold during amalgamation of auriferous, ores blanketings, tailings, pyrites, &c.," to be known as "Joseph, Muir, and Bensusan's Improved Amalgamating Alkaline Process," which is more particularly described in the specification which is hereunto annexed; and that they, the said Petitioners, have deposited with the Honorable the Treasurer of the said Colony of New South Wales the sum of Twenty Pounds sterling, for defraying the expenses of granting these Letters of Registration, as required by the Act of Council, sixteenth Victoria, number twenty-four; and have humbly prayed that I would be pleased to grant Letters of Registration, whereby the exclusive enjoyment and advantage of the said invention or improvement might be secured to them for a period of fourteen years: And I, being willing to give encouragement to all inventions and improvements in the arts or manufactures which may be for the public good, and having received a report favourable to the prayer of the said Petition, from competent persons appointed by me to examine and consider the matters stated therein and to report thereon for my information, am pleased, with the advice of the Executive Council, and in exercise of the power and authority given to me by the said Act of Council, to grant, and do by these Letters of Registration grant unto the said Henry Joseph, John Matthew Muir, and Samuel Levy Bensusan, their executors, administrators, and assigns, the exclusive enjoyment and advantage of the said invention or improvement, for and during the term of fourteen years from the date hereof; to have, hold, and exercise unto the said Henry Joseph, John Matthew Muir, and Samuel Levy Bensusan, their executors, administrators, and assigns, the exclusive enjoyment and advantage thereof, for and during and unto the full end and term of fourteen years from the date of these presents next and immediately ensuing, and fully to be complete and ended: Provided always, that if the said Henry Joseph, John Matthew Muir, and Samuel Levy Bensusan shall not, within three days after the granting of these Letters of Registration, register the same in the proper office in the Supreme Court, at Sydney, in the said Colony of New South Wales, then these Letters of Registration, and all advantages whatsoever hereby granted, shall cease and become void.

In witness whereof, I have hereunto set my sign manual, and have caused the present Letters of Registration to be sealed with the seal of the said Colony of New South Wales, at Government House, Sydney, in New South Wales, this twentieth day of February, in the year of our Lord one thousand eight hundred and eighty.

[L.S.] AUGUSTUS LOFTUS.

SPECIFICATION.

Joseph, Muir, and Bensusan's Improved Amalgamating Alkaline Process.

SPECIFICATION.

TO ALL TO WHOM THESE PRESENTS SHALL COME: We, HENRY JOSEPH and JOHN MATTHEW MUIR, both analytical chemists, assayers, and auriferous refuse treaters, of Gympie, in the Colony of Queensland, and Samuel Levy Bensusan, metallurgist, of Sydney, in the Colony of New South Wales.

WHEREAS we are desirous of obtaining Royal Letters Patent for securing unto us Her Majesty's special license that we, our executors, administrators, and assigns, and such others as we or they should at any time agree with and no others, should and lawfully might, from time to time, and at all times during the term of fourteen years to be computed from the day on which this instrument shall be left at the office of the Colonial Secretary, make, use, exercise, and vend within the Colony of New South Wales and its dependencies, an invention for the "prevention of sickening of mercury and loss of gold during amalgamation of auriferous ores, blanketings, tailings, pyrites, &c.," to be known as "Joseph, Muir, and Bensusan's Improved Amalgamating Alkaline Process"; and in order to obtain the said Letters Patent we must, by an instrument in writing under our hands and seals, particularly describe and ascertain the nature of the said invention and in what manner the same is to be performed, and must also enter into the covenant hereafter contained:

Now know ye, that the nature of the said invention, and the manner in which the same is to be performed, is particularly described and ascertained in and by the following statement (that is to say):—The novelty of our improved process consists in preventing what is commonly known as the "sickening of mercury" during the amalgamation of auriferous ores, gangues, pyrites, blanketings, tailings, or other auriferous substances or waste, by offering to the evolved bodies a substance or substances for which they have a greater affinity than for the mercury, namely, the alkaline earths and their compounds, the oxides of barium and calcium (we prefer the latter in consequence of its cheapness). Our process is to add an excess of lime in the usual grinding or stamping machines whilst they are in operation, or to mix this lime in suitable proportion with any of the auriferous substances previous to treating by grinding or stamping in contact with mercury. The usual proportion of the barium and calcium or their compounds to be added does not generally exceed 10 per cent. of the weight of the ore ground or stamped, but in some instances where the mercury shows the slightest tendency to "sicken" during the operation of stamping or grinding, more lime must be added until this tendency disappears. Another part of our process is to roast the auriferous ores and other substances already named with the alkaline earths and their compounds herein mentioned, producing a decomposition of the original sulphurets and the formation of other compounds not detrimental to amalgamation: We also have to state, in explanation of and in reference to our improved process, that when pyrites, blanketings, tailings, gangues, and other auriferous ores or waste are ground in contact with mercury under certain conditions favourable for that purpose, the mercury becomes what is commonly known as "sickened"; it loses its affinity for gold and silver, and a large loss of quicksilver takes place, entailing a considerable loss of gold with it. This loss of mercury is occasioned by sulphur in one form or another or sulphuretted hydrogen being evolved by the excessive friction, which combines with the bright surface of the mercury, at once deadening and turning it black, and forming a new compound (sulphide of mercury) which is antagonistic to mercury taking up gold, and floating on the surface of the water used in the operation, in the form of a black soapy slime, carries away a large percentage of gold as the water flows from the machine.

Having set forth the nature of our invention and the manner in which a saving of gold and mercury is obtained, it is to be clearly understood, before we proceed to state our claims, that we do not bind ourselves to use any particular mechanical arrangement by which auriferous substances are roasted, crushed, ground, stamped, pulverized, or amalgamated, and that our improved process can be carried on with the usual machinery for roasting, crushing, grinding, pulverizing, and amalgamating; neither do we claim any chemicals or compounds singly or apart from the object or purpose from the said invention herein set forth. We claim generally the improved process herein described and set forth for preventing the "sickening" of mercury and loss of gold during the amalgamation of auriferous ores, blanketings, tailings, pyrites, &c., whereby the mercury used in amalgamating retains its attractive properties for gold, and its affinity for that metal is kept up, and consequently more gold saved thereby; and we further specially claim, on account of their peculiar novelty,—

1st. The roasting of auriferous substances enumerated herein with the alkaline earths, calcium, and barium, or their compounds, by which operation the original sulphurets are decomposed and other compounds formed not detrimental to amalgamation.

2nd. Adding the alkaline earths, calcium or barium, or their compounds, in suitable proportion as herein described, to the auriferous substances to be treated by stamping, grinding, or pulverizing with mercury, by which the "sickening" of mercury during the process of amalgamation is prevented.

3rd. The saving of gold and mercury effected by the improved process herein described, by the prevention of the "sickening" of mercury during the amalgamation of the auriferous substances under treatment.

HENRY JOSEPH,
By his Attorney,
S. L. BENSUSAN.

JOHN MATTHEW MUIR,
By his Attorney,
S. L. BENSUSAN.

S. L. BENSUSAN.

This is the specification referred to in the annexed Letters of Registration granted to Henry Joseph, John Matthew Muir, and Samuel Levy Bensusan, this twentieth day of February, A.D. 1880.

AUGUSTUS LOFTUS.

REPORT.

Joseph, Muir, and Bensusan's Improved Amalgamating Alkaline Process.

REPORT.

Sir, Sydney, 28 January, 1880.

The application of Messrs. Joseph, Muir, and Bensusan, for Letters of Registration for an invention for the "prevention of sickening of mercury and loss of gold during amalgamation of auriferous ores, &c.," having been referred to us, we have examined the specification accompanying the same, and have now the honor to report that we see no objection to the issue of Letters of Registration as prayed for.

We have, &c.,
J. SMITH.
CHAS. WATT.

The Principal Under Secretary.

A.D. 1880, 20*th February*. No. 803.

IMPROVEMENTS IN PRESERVING MEAT, &c.

LETTERS OF REGISTRATION to Herbert Maguire Whitehead, for Improvements in Preserving Meat in solid form, and in Apparatus connected therewith.

[Registered on the 21st day of February, 1880, in pursuance of the Act 16 Vic. No. 24.]

BY His Excellency the Right Honorable Sir Augustus William Frederick Spencer Loftus (commonly called Lord Augustus Loftus), Knight Grand Cross of the Most Honorable Order of the Bath, a Member of Her Majesty's Most Honorable Privy Council, Governor and Commander-in-Chief of the Colony of New South Wales and its Dependencies.

TO ALL TO WHOM THESE PRESENTS SHALL COME, greeting:

WHEREAS Herbert Maguire Whitehead, of Fenchurch-street, London, England, provision merchant, hath by his Petition humbly represented to me that he is the author or designer of a certain invention or improvement in manufactures, that is to say, of an invention for "Improvements in Preserving Meat in solid form, and in Apparatus connected therewith," which is more particularly described in the specification which is hereunto annexed; and that he, the said Petitioner, hath deposited with the Honorable the Treasurer of the said Colony of New South Wales the sum of Twenty Pounds sterling, for defraying the expense of granting these Letters of Registration, as required by the Act of Council, sixteenth Victoria, number twenty-four; and hath humbly prayed that I would be pleased to grant Letters of Registration, whereby the exclusive enjoyment and advantage of the said invention or improvement might be secured to him for a period of fourteen years: And I, being willing to give encouragement to all inventions and improvements in the arts or manufactures which may be for the public good, and having received a report favourable to the prayer of the said Petition, from competent persons appointed by me to examine and consider the matters stated therein and to report thereon for my information, am pleased, with the advice of the Executive Council, and in exercise of the power and authority given to me by the said Act of Council, to grant, and do by these Letters of Registration grant unto the said Herbert Maguire Whitehead, his executors, administrators, and assigns, the exclusive enjoyment and advantage of the said invention or improvement, for and during the term of fourteen years from the date hereof; to have, hold, and exercise unto the said Herbert Maguire Whitehead, his executors, administrators, and assigns, the exclusive enjoyment and advantage thereof, for and during and unto the full end and term of fourteen years from the date of these presents next and immediately ensuing, and fully to be complete and ended: Provided always, that if the said Herbert Maguire Whitehead shall not, within three days after the granting of these Letters of Registration, register the same in the proper office in the Supreme Court, at Sydney, in the said Colony of New South Wales, then these Letters of Registration, and all advantages whatsoever hereby granted, shall cease and become void.

In witness whereof, I have hereunto set my sign manual, and have caused the present Letters of Registration to be sealed with the seal of the said Colony of New South Wales, at Government House, Sydney, in New South Wales, this twentieth day of February, in the year of our Lord one thousand eight hundred and eighty.

[L.S.] AUGUSTUS LOFTUS.

Improvements in Preserving Meat, &c.

SPECIFICATION.

THIS invention relates to cutting meat into slices or slabs corresponding in thickness and size to the depth, width, and length of the tin or vessel in which it has to be preserved, in order that each slice or slab which is by my invention preserved in a solid form may retain all its nutritive properties within itself, instead of imparting them to the liquor as is now the case.

I prefer that each tin be about six inches square on the top, and about one inch or an inch and a half to two or three inches in depth, but I do not confine myself to making the tins of square shape on top, as tins of other shapes can be equally filled with slices or slabs of meat to be preserved in solid form according to my invention.

By the method and means above described the meat will be preserved and retain all its nutritive properties.

In cutting the meat I purpose to use a plunger press with a mould knife corresponding in shape to that of the tin in which the meat has to be afterwards placed. The knife has enclosed within it a plunger, which as the knife rises after cutting the meat, and a tin being affixed under it, the plunger, which is stationary after rising a given distance recedes and pushes the meat into the tin. The plunger then rises and takes its place within the knife ready for the next down stroke, when they both travel a given distance together, and then the plunger stops, leaving the knife to continue its progress through the next portion of meat which has been placed under it for a repeat of the operation.

Having now described the nature of my said invention and in what manner the same is to be performed, I declare that I claim,—

First—Preserving meat in flat tins, in which the meat fills the tins in solid form as described.

Secondly—I claim the method of and apparatus for cutting meat as herein described, whereby tins can be filled with meat to be preserved in solid form, as set forth.

In witness whereof I, the said Herbert Maguire Whitehead, have hereunto set my hand and seal, this seventh day of November, in the year of our Lord one thousand eight hundred and seventy-nine.

H. M. WHITEHEAD.

This is the specification referred to in the annexed Letters of Registration granted to Herbert Maguire Whitehead, dated this twentieth day of February, A.D. 1880.

AUGUSTUS LOFTUS.

REPORT.

Sydney, 28 January, 1880.

Sir,

The application of Mr. H. M. Whitehead for Letters of Registration, for "Improvements in Preserving Meat in solid form and in apparatus connected therewith," having been referred to us, we have examined the specification accompanying the same, and have now the honor to report that we see no objection to the issue of Letters of Registration as prayed for.

We have, &c.,

J. SMITH.
CHAS. WATT.

The Principal Under Secretary.

A.D. 1880, *2nd March.* No. 804.

IMPROVEMENTS IN ELECTRIC LAMPS, &c.

LETTERS OF REGISTRATION to Thomas Alva Edison, for Improvements in Electric Lamps, and in the method of manufacturing the same.

[Registered on the 3rd day of March, 1880, in pursuance of the Act 16 Vic. No. 24.]

BY HIS EXCELLENCY THE RIGHT HONORABLE SIR AUGUSTUS WILLIAM FREDERICK SPENCER LOFTUS (commonly called LORD AUGUSTUS LOFTUS), Knight Grand Cross of the Most Honorable Order of the Bath, a Member of Her Majesty's Most Honorable Privy Council, Governor and Commander-in-Chief of the Colony of New South Wales and its Dependencies.

TO ALL TO WHOM THESE PRESENTS SHALL COME, greeting:

WHEREAS THOMAS ALVA EDISON, of Menlo Park, in the State of New Jersey, United States of America, hath by his Petition humbly represented to me that he is the author or designer of a certain invention or improvement in manufactures, that is to say, of an invention entitled "Improvements in Electric Lamps, and in the method of manufacturing the same," which is more particularly described in the specification and the sheet of drawings which are hereunto annexed; and that he, the said Petitioner, hath deposited with the Honorable the Treasurer of the said Colony of New South Wales the sum of Twenty Pounds sterling, for defraying the expense of granting these Letters of Registration, as required by the Act of Council, sixteenth Victoria, number twenty-four; and hath humbly prayed that I would be pleased to grant Letters of Registration, whereby the exclusive enjoyment and advantage of the said invention or improvement might be secured to him for a period of fourteen years: And I, being willing to give encouragement to all inventions and improvements in the arts or manufactures which may be for the public good, and having received a report favourable to the prayer of the said Petition, from competent persons appointed by me to examine and consider the matters stated therein and to report thereon for my information, am pleased, with the advice of the Executive Council, and in exercise of the power and authority given to me by the said Act of Council, to grant, and do by these Letters of Registration grant unto the said Thomas Alva Edison, his executors, administrators, and assigns, the exclusive enjoyment and advantage of the said invention or improvement, for and during the term of fourteen years from the date hereof; to have, hold, and exercise unto the said Thomas Alva Edison, his executors, administrators, and assigns, the exclusive enjoyment and advantage thereof, for and during and unto the full end and term of fourteen years from the date of these presents next and immediately ensuing, and fully to be complete and ended: Provided always, that if the said Thomas Alva Edison shall not, within three days after the granting of these Letters of Registration, register the same in the proper office in the Supreme Court, at Sydney, in the said Colony of New South Wales, then these Letters of Registration, and all advantages whatsoever hereby granted, shall cease and become void.

In witness whereof, I have hereunto set my sign manual, and have caused the present Letters of Registration to be sealed with the seal of the said Colony of New South Wales, at Government House, Sydney, in New South Wales, this second day of March, in the year of our Lord one thousand eight hundred and eighty.

[L.S.] AUGUSTUS LOFTUS.

Improvements in Electric Lamps, &c.

SPECIFICATION.

TO ALL WHOM IT MAY CONCERN : Be it known that I, THOMAS ALVA EDISON, of Menlo Park, in the State of New Jersey, United States of America, have invented an "Improvement in Electric Lamps, and in the method of manufacturing the same," of which the following is a specification :—

THE object of this invention is to produce electric lamps giving light by incandescence, which lamps shall have high resistance so as to allow of the practical subdivision of the electric light.

The invention consists in a light-giving body of carbon wire or sheets, coiled or arranged in such a manner as to offer great resistance to the passage of the electric current and at the same time present but a slight surface from which radiation can take place.

The invention further consists in placing such burner of great resistance in a nearly perfect vacuum, to prevent oxidation and injury to the conductor by the atmosphere. The current is conducted into the vacuum bulb through platina wires sealed into the glass.

The invention further consists in the method of manufacturing carbon conductors of high resistance, so as to be suitable for giving light by incandescence, and in the manner of securing perfect contact between the metallic conductors or leading wires and the carbon conductor.

Heretofore light by incandescence has been obtained from rods of carbon of one to four ohms resistance, placed in closed vessels in which the atmospheric air has been replaced by gases that do not combine chemically with the carbon. The vessel holding the burner has been composed of glass, cemented to a metallic base. The connection between the leading wires and the carbon has been obtained by clamping the carbon to the metal. The leading wires have always been large, so that their resistance shall be many times greater than the burner, and in general the attempts of previous persons has been to reduce the resistance of the carbon rod.

The disadvantages of following this practice are—that a lamp having but one to four ohms resistance cannot be worked in great numbers in multiple arc without the employment of main conductors of enormous dimensions, that owing to the low resistance of the lamp the leading wires must be of large dimensions and good conductors ; and a glass globe cannot be kept tight at the place where the wires pass in and are cemented, hence the carbon is consumed, because there must be almost a perfect vacuum to render the carbon stable, especially when such carbon is small in mass and high in electrical resistance.

In the use of a gas in the receiver at the atmospheric pressure which, although not attacking the carbon, serves to destroy it in time by "air washing" or the attrition produced by the rapid passage of the air over the slightly coherent highly heated surface of the carbon.

I have reversed this practice. I have discovered that even a cotton thread properly carbonized and placed in a sealed glass bulb exhausted to one millionth of an atmosphere, offers from one hundred to five hundred ohms resistance to the passage of the current, and that it is absolutely stable at very high temperatures ; that if the thread be coiled as a spiral and carbonized, or if any fibrous vegetable substance which will leave a carbon residue after heating in a closed chamber, be so coiled that as much as two thousand ohms resistance may be obtained without presenting a radiating surface greater than $\frac{3}{16}$ of an inch ; that if such fibrous material be rubbed with a plastic composed of lamp-black and tar, its resistance may be made high or low, according to the amount of lamp-black placed upon it. That carbon filaments may be made by a combination of tar and lamp-black, the latter being previously ignited in a closed crucible for several hours and afterwards moistened and kneaded until it assumes the consistency of thick putty. Small pieces of this material may be rolled out in the form of wire as small as $\frac{7}{1000}$ of an inch in diameter and over a foot in length, and the same may be coated with a non-conducting non-carbonizing substance and wound on a bobbin or as a spiral, and the tar carbonized in a closed chamber by subjecting it to high heat, the spiral after carbonization retaining its form.

All these forms are fragile and cannot be clamped to the leading wires with sufficient force to ensure good contact and prevent heating. I have discovered that if platinum wires are used and the plastic lamp-black and tar material be moulded around it, that in the act of carbonization there is an intimate union by combination and by pressure between the carbon and platina, and nearly perfect contact is obtained without the necessity of clamps ; hence the burner and the leading wires are connected to the carbon ready to be placed in the vacuum bulb.

When fibrous material is used, the plastic lamp-black and tar is used to secure it to the platina before carbonizing.

By using the carbon wire of such high resistance, I am enabled to use fine platinum wires for leading wires, as they will have a small resistance compared to the burner, hence will not heat and crack the sealed vacuum bulb. Platina can only be used, as its expansion is nearly the same as that of glass. By using a considerable length of carbon wire and coiling it in such a manner that only a small portion of its entire surface radiates light, I can raise the specific heat of the whole, and thus prevent the rapid reception and disappearance of the light, which on a plain wire is prejudicial, as it shows the least unsteadiness of the current by the flickering of the light, but if the current is steady the defect does not show.

I have carbonized and used cotton and linen thread, wood splints, papers coiled in various ways ; also lamp-black, plumbago, and carbon in various forms, mixed with tar and kneaded so that the same may be rolled out into wires of various lengths and diameters ; each wire, however, is to be uniform in size throughout.

If the carbon thread is liable to be distorted during carbonization, it is to be coiled between a helix of copper wire. The ends of the carbon or filament are secured to the platina leading wires by plastic carbonizable material, and the whole placed in the carbonizing chamber. The copper which has served to prevent distortion of the carbon thread is afterwards eaten away by nitric acid, and the spiral soaked in water and then dried and placed on the glass holder and a glass bulb blown over the whole with a leading tube for exhaustion by a mercury pump. This tube when high vacua has been reached is hermetically sealed.

With substances which are not greatly distorted in carbonizing they may be coated with a non-conducting non-carbonizable substance which allows one coil or turn of the carbon to rest upon and be supported by the other.

In

Improvements in Electric Lamps, &c.

In the drawing, figure 1 shows the lamp sectionally; *a* is the carbon spiral or thread, *c c'* are the thickened ends of the spiral, formed of the plastic compound of lamp-black and tar, *d d'* are the platina wires, *h h* are the clamps which serve to connect the platina wires cemented in the carbon with the leading wires *x x*. Sealed in the glass vacuum bulb *e e* are copper wires connected just outside the bulb to the wires *x x*; *m* is the tube, shown by dotted lines, leading to the vacuum pump which after exhaustion is hermetically sealed and the surplus removed.

Figure 2 represents the plastic material before being wound into a spiral.

Figure 3 shows the spiral after carbonization, ready to have a bulb blown over it.

I claim as my invention,—

First—An electric lamp for giving light by incandescence, consisting of a filament of carbon of high resistance, made as described, and secured to metallic wires as set forth.

Second—The combination of carbon filaments within a receiver made entirely of glass, through which the leading wires pass, and from which receiver the air is exhausted for the purpose set forth.

Third—A coiled carbon filament or strip, arranged in such a manner that only a portion of the surface of such carbon conductor shall radiate light as set forth.

Fourth—The method herein described of securing the platina contact wires to the carbon filament and carbonizing of the whole in a closed chamber, substantially as set forth.

This is the specification referred to in the annexed Letters of Registration granted to Thomas Alva Edison, this second day of March, A.D. 1880.

AUGUSTUS LOFTUS.

REPORT.

Sir, Sydney, 6 February, 1880.

The application of Mr. T. A. Edison for Letters of Registration for "Improvements in Electric Lamps and in the method of manufacturing the same," having been referred to us, we have examined the specification and drawings accompanying the same, and have now the honor to report that we see no objection to the issue of the Letters of Registration as prayed for.

We have, &c.,
J. SMITH.
E. C. CRACKNELL.

The Principal Under Secretary.

[Drawings—one sheet.]

Fig. 1.

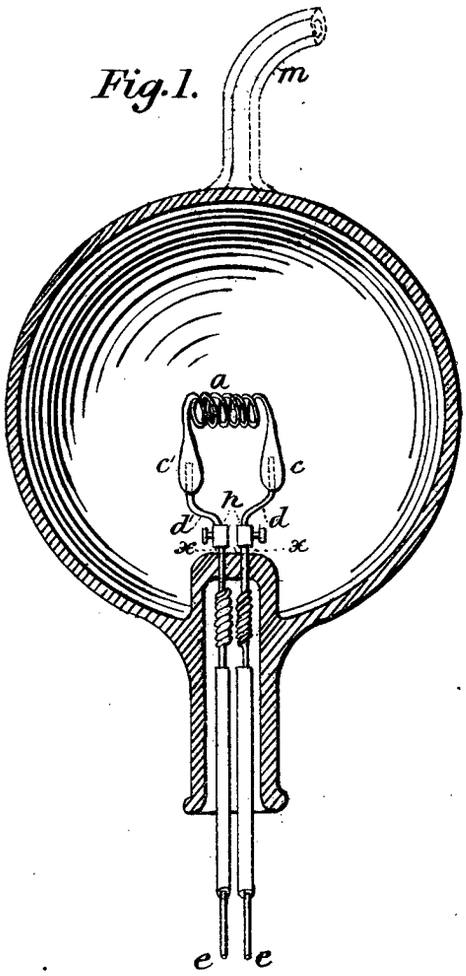

Fig. 2.



Fig. 3.

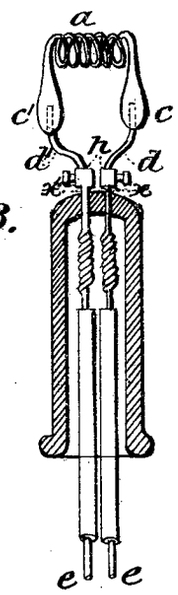

Witnesses
S.L. Griffin
J.W. Husbands

Thomas Alva Edison
Inventor.

This is the Sheet of Drawings referred to in the annexed Letters of Registration granted to Thomas Alva Edison, this second day of March, A.D. 1880. Augustus Loftus

(Sig. 357)

A.D. 1880, *2nd March.* No. 805.

IMPROVEMENTS IN GAS MOTOR ENGINES.

LETTERS OF REGISTRATION to Gottlieb Wilhelm Daimler, for Improvements in Gas Motor Engines.

[Registered on the 3rd day of March, 1880, in pursuance of the Act 16 Vic. No. 24.]

BY His Excellency the Right Honorable Sir Augustus William Frederick Spencer Loftus (commonly called Lord Augustus Loftus) Knight Grand Cross of the Most Honorable Order of the Bath, a Member of Her Majesty's Most Honorable Privy Council, Governor and Commander-in-Chief of the Colony of New South Wales and its Dependencies.

TO ALL TO WHOM THESE PRESENTS SHALL COME, greeting:

WHEREAS Gottlieb Wilhelm Daimler, of the Gas Motoren Fabrik, Deutz, at Deutz, on the Rhine, in the German Empire, engineer, hath by his Petition humbly represented to me that he is the author or designer of a certain invention or improvement in manufactures, that is to say, of an invention entitled "Improvements in Gas Motor Engines," which is more particularly described in the specification and the sheet of drawings which are hereunto annexed; and that he, the said Petitioner, hath deposited with the Honorable the Treasurer of the said Colony of New South Wales the sum of Twenty Pounds sterling, for defraying the expense of granting these Letters of Registration, as required by the Act of Council, sixteenth Victoria, number twenty-four; and hath humbly prayed that I would be pleased to grant Letters of Registration, whereby the exclusive enjoyment and advantage of the said invention or improvement might be secured to him for a period of fourteen years: And I, being willing to give encouragement to all inventions and improvements in the arts or manufactures which may be for the public good, and having received a report favourable to the prayer of the said Petition, from competent persons appointed by me to examine and consider the matters stated therein and to report thereon for my information, am pleased, with the advice of the Executive Council, and in exercise of the power and authority given to me by the said Act of Council, to grant, and do by these Letters of Registration grant unto the said Gottlieb Wilhelm Daimler, his executors, administrators, and assigns, the exclusive enjoyment and advantage of the said invention or improvement, for and during the term of fourteen years from the date hereof; to have, hold, and exercise unto the said Gottlieb Wilhelm Daimler, his executors, administrators, and assigns, the exclusive enjoyment and advantage thereof, for and during and unto the full end and term of fourteen years from the date of these presents next and immediately ensuing, and fully to be complete and ended: Provided always, that if the said Gottlieb Wilhelm Daimler shall not, within three days after the granting of these Letters of Registration, register the same in the proper office in the Supreme Court, at Sydney, in the said Colony of New South Wales, then these Letters of Registration, and all advantages whatsoever hereby granted, shall cease and become void.

In witness whereof, I have hereunto set my sign manual, and have caused the present Letters of Registration to be sealed with the seal of the said Colony of New South Wales, at Government House, Sydney, in New South Wales, this second day of March, in the year of our Lord one thousand eight hundred and eighty.

[L.S.] AUGUSTUS LOFTUS.

SPECIFICATION

Improvements in Gas Motor Engines.

SPECIFICATION of GOTTLIEB WILHELM DAIMLER, of the Gas Motoren Fabrik, Deutz, at Deutz, on the Rhine, in the German Empire, engineer, for an invention entitled "Improvements in Gas Motor Engines."

THIS invention has reference to that description of gas motor engines in which every alternate stroke of the piston constitutes the working stroke, and consists mainly in combining the cylinders of two such engines in such manner with a third cylinder that the gaseous products of combustion under pressure after acting in the first-named cylinders pass thence into the last-named cylinder, in order by their expansion therein to perform a further amount of work, which is transmitted to the same engine shaft to which the pistons of the high pressure cylinders are connected. By this means an increased useful effect is obtained from the combustible gases employed as motive power, and a more uniform motion of the engine is attained.

The construction of a compound engine operating according to this invention is shown on the accompanying drawings, in which fig. 1 shows a side elevation of the engine partly in section, and with one of the high pressure cylinders removed; fig. 2 shows a sectional plan, fig. 3 shows a back end elevation, and fig. 4 shows a cross section on line X X, fig. 1. The two high pressure cylinders A^1 A^2 are open to the atmosphere at the front end, and contain pistons, B^1 B^2, which by one outstroke draw in a charge of combustible gas and air which is compressed by the following instroke, the charge being then fired, causing the piston to perform its working outstroke, and by the next instroke the gaseous products of combustion are expelled, the mode of operating being so far the same as described in the specification to Otto's Letters of Registration of the 5th August, 1878.

The two pistons B^1 B^2 are so connected by their piston rods to cranks, C^1 C^2, on the engine shaft C as to perform their outstrokes simultaneously or nearly so, but their strokes are so timed that while the one piston is performing its working outstroke the other is performing the stroke by which the combustible charge is drawn into the cylinder, so that the engine shaft is propelled by a working stroke at every revolution, instead of only at every other revolution as would be the case with a single working cylinder. In like manner, while the one piston is performing its compressing instroke the other performs its expelling instroke. Instead of allowing the expelled gases to escape into the atmosphere, as was the case in the engine described in the above-mentioned specification, they are caused to enter a third cylinder, A^3, whose piston, B^3, they consequently propel outwards by their expansive force, and such piston being connected by its rod to a crank, C^3, on the engine shaft opposite those, C^1 C^2, of the high pressure cylinders, or nearly so, it will be seen that the piston B^3 will perform its outstrokes, each of which is a working stroke, simultaneously with the instrokes of the pistons B^1 B^2. Hence, during two revolutions of the engine shaft the following functions will be performed consecutively by the three cylinders :—

Half revolution of crank shaft.	High pressure. Piston I.	Low pressure. Piston II.	High pressure. Piston III.
First	Makes outstroke drawing in charge.	Makes instroke, expelling exhaust.	Makes outstroke, being propelled and doing work.
Second	Makes instroke, compressing charge.	Makes outstroke, worked by expansion of exhaust from III.	Makes instroke, expelling exhaust into II.
Third	Makes outstroke, being propelled and doing work.	Makes instroke, expelling exhaust.	Makes outstroke, drawing in charge.
Fourth	Makes instroke, expelling exhaust into II.	Makes outstroke, being worked by expansion of exhaust from I.	Makes instroke, compressing charge.

This cycle of operations is continuously repeated.

From the above it follows that with this arrangement there will occur during each revolution of the shaft two impulses, the one being from one of the high pressure cylinders, and the other from the low pressure cylinder.

The passage of the gaseous products from the high pressure cylinders to the low pressure cylinder can commence before the pistons of the former arrive at the extreme end of outstroke, but the low pressure piston must at that time have just arrived at the extreme end of its instroke. The communications between the high and low pressure cylinders for effecting the above-described operations are governed by means of valves, D^1 D^2, in communicating passages E^1 E^2 and the escape of the products from the low pressure cylinder is regulated by the valve F closing an escape passage, F^1. In order to prevent the gases under pressure that are passing from the one high pressure cylinder to the low pressure cylinder from passing also to the other high pressure cylinder (which at that time will just be commencing its compressing stroke, and will consequently contain gases at lower pressure) check valves, G^1 G^2, are provided. In order to equalize the pressure on each side of the valves D^1 D^2, so as both to prevent loss of useful effect and wear and noise in working, the pressure in the communicating passage E^1 E^2 is maintained approximately equal to that of the gases passing from the high to the low pressure cylinder, by causing the escape valve F to the latter to close before its piston arrives at end instroke, so as to produce back pressure; and to enable such back pressure to pass to the underside of the valve D^1 or D^2 before this is opened, the check valve G^1 or G^2 is opened slightly in advance thereof, and simultaneously with the closing of the escape valve F. The opening of the valves D^1 D^2 and G^1 G^2 is effected from a countershaft, H, by means of a crank, I, and connecting rod, I^1, working a lever, I^2, on a rocking shaft, J, carrying the rocking arms J^1 J^2, with lappets which act on the lower ends of the valve stems, so as to press these upwards against the action of springs, as shown. The crank I also imparts the requisite reciprocating motion to the usual admission and ignition slides K^1 K^2 of the high pressure cylinders, by means of the connecting rod K^3. The escape valve F of the low pressure cylinder

cylinder is actuated by two cams or lappets, L^1 L^2, on the countershaft H, through the bell-crank lever M. In order to reduce the work of compression during the first compressing strokes of the high pressure cylinders on first starting the engine, these are provided with escape valves, N^1 N^2, that are kept open during the first part of such strokes by means of lappet levers, O^1 O^2, actuated from the levers J^1 J^2, so as to allow a portion of the first charge of the cylinders to escape. The levers O^1 O^2 are capable of being slid upon their pins so as to be thrown out of gear with the levers J^1 J^2 after the engine is started, as indicated by the dotted positions O^3 O^4 at fig. 2. In like manner the escape valve F of cylinder A^3 is kept open during the first outstroke of the piston, in order to prevent a vacuum being formed behind it, this being effected by means of a sliding pin, T, as shown at fig. 1, such pin being drawn backwards, as indicated by the dotted lines, when the engine is started. The supply of combustible gas to the slides K^1 K^2 of the high pressure cylinders is regulated by means of the gas valve P, actuated by a bell-crank lever, P^1, from a sliding cam, P^2, on the countershaft H, controlled by a governor, Q, in a similar manner to that described in the before-mentioned specification of Otto, the valve being opened twice in one revolution of the shaft. The gas passes from the valve P, through pipes, R R^1, to the engine slides, which are also constructed and operate in a similar manner to that described in Otto's specification; they are so timed in their working that while the gas is passing into the slide of the one cylinder it is cut off from the slide of the other cylinder. The countershaft H receives its motion from the engine shaft C, through gearing S S^1, so as to make one revolution for every two revolutions of the engine shaft. The cylinders and passages are enclosed by jackets cooled by water circulation.

The above-described engine may also be constructed without the low pressure cylinder, in which case the two high pressure cylinders discharge their products of combustion into the atmosphere, working otherwise the same as above described; also, a single high pressure cylinder may be combined with the low pressure cylinder, operating in the same manner as above described.

Having thus described the nature of my invention and in what manner the same is to be performed, I claim—

First—A gas motor engine having two high pressure cylinders, each of which consecutively draws in a combustible charge, compresses it, fires it, and performs the working stroke, and expels the products of combustion, the pistons of the two cylinders being connected to one and the same engine shaft, so as to perform their strokes together, but the working stroke of the one cylinder being made to take place while the other cylinder is drawing in its combustible charge, substantially as herein described.

Second—In a gas motor engine the combination of two high pressure cylinders, each of which consecutively draws in a combustible charge, compresses it, fires it, and performs the working stroke with a low pressure cylinder into which the gaseous products are caused to pass alternately from the high pressure cylinders so as to perform further work by expansion therein, substantially as herein described.

Third—In a gas motor engine the combination of two high pressure cylinders whose alternate outstrokes are working strokes with a low pressure cylinder into which the products of combustion pass from the high pressure cylinders, the one high pressure piston being made to perform its working outstroke simultaneously with the charging outstroke of the other, while the low pressure piston performs a working outstroke during each instroke of the high pressure cylinder, substantially as herein set forth.

Fourth—In a gas motor engine wherein two high pressure cylinders operate in combination with one low pressure cylinder in which the products of combustion from the high pressure cylinders are caused to act expansively, a shaft revolving at half the speed of the engine shaft, and operating the two admission slides of the high pressure cylinders and the admission and check valves from the high pressure cylinders to the low pressure cylinder by one and the same crank or eccentric, the discharge valve to the low pressure cylinder being operated by separate cams or lappets on the said shaft, substantially as herein described.

Fifth—In a gas motor engine the combination of the high pressure cylinders A^1 A^2 with low pressure cylinder A^3, communicating passages E^1 E^2, admission and check valves D^1 D^2, G^1 G^2, actuated by crank I, and lappet levers J^1 J^2, and escape valve F, actuated by cams N and lever M, operating substantially as herein described.

Sixth—In gas motor engines, the combination with the high pressure cylinders A^1 A^2 of escape valves N^1 N^2, operated by lappet levers O^1 O^2, capable of being slid out of action, substantially as and for the purposes herein set forth.

Seventh—In combination with the escape valve F of the low pressure cylinder, the pin T, capable of being slid so as to keep the valve F open, substantially as and for the purposes set forth.

In witness whereof, I, the said Gottlieb Wilhelm Daimler, have hereunto set my hand and seal, this twenty-eighth day of November, 1879.

Witness— GOTTLIEB WILHELM DAIMLER.

GUSTAV KLEINJUNG.

This is the specification referred to in the annexed Letters of Registration granted to Gottlieb Wilhelm Daimler, this second day of March, A.D. 1880. AUGUSTUS LOFTUS.

REPORT.

A.D. 1880. No. 805.

Improvements in Gas Motor Engines.

REPORT.

Sir,

Sydney, 3rd February, 1880.

The application of Mr. G. W. Daimler for Letters of Registration for "Improvements in Gas Motor Engines" having been referred to us, we have examined the specification and drawings accompanying the same, and have now the honor to report that we see no objection to the issue of Letters of Registration as prayed for.

We have, &c.,

J. SMITH.
CHAS. WATT.

The Principal Under Secretary.

[Drawings—one sheet.]

Fig. 1

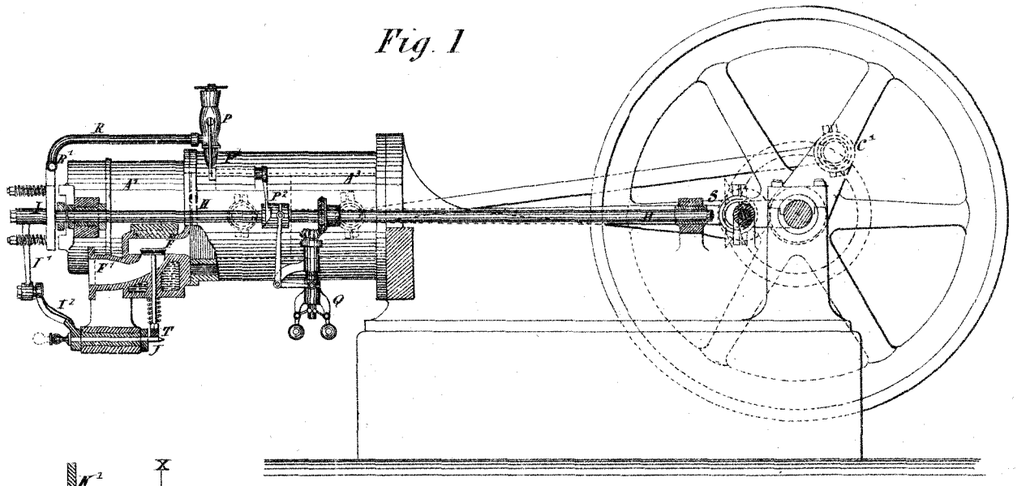

Fig. 2.

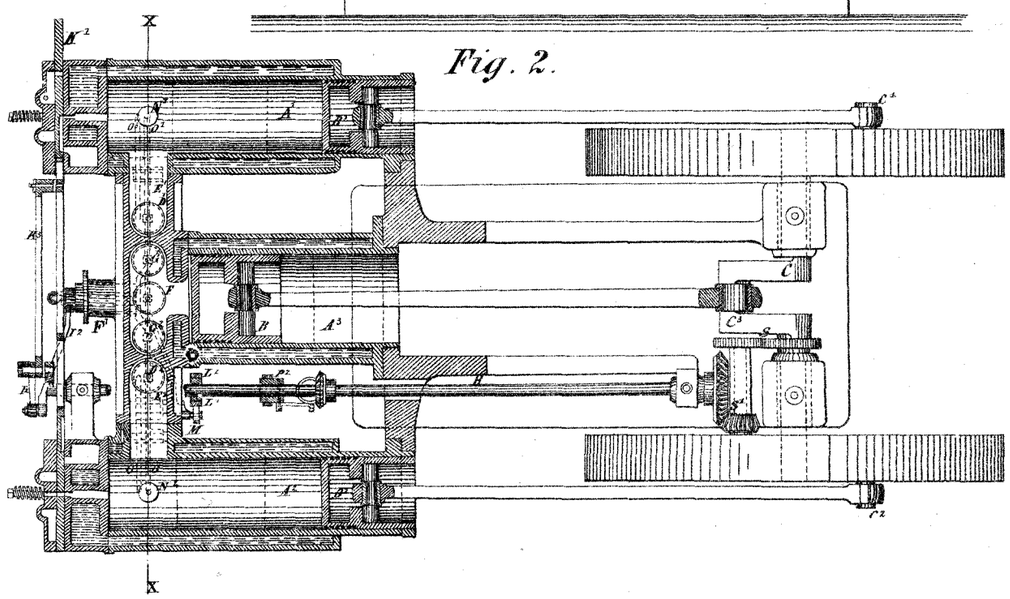

Fig. 4.

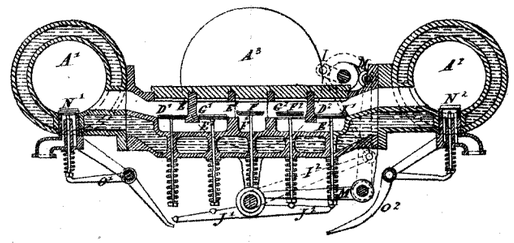

Fig. 3.

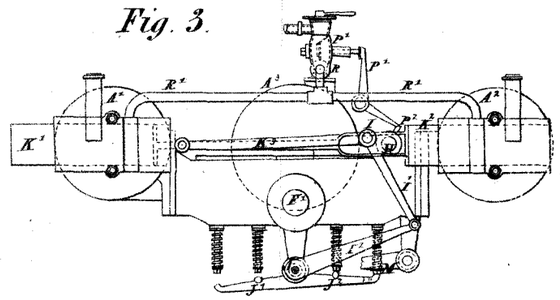

This is the Sheet of Drawings referred to in the annexed Letters of Registration granted to Gottlieb Wilhelm Daimler, this second day of March A.D. 1880.

Augustus Loftus.

(Sig 357)

PHOTO-LITHOGRAPHED AT THE GOVT. PRINTING OFFICE, SYDNEY, NEW SOUTH WALES.

A.D. 1880, 2*nd March.* No. 806.

WINTLE'S WASHING-MACHINE.

LETTERS OF REGISTRATION to John Wintle, for Improvements in Washing-machines.

[Registered on the 3rd day of March, 1880, in pursuance of the Act 16 Vic. No. 24.]

BY His Excellency the Right Honorable Sir Augustus William Frederick Spencer Loftus (commonly called Lord Augustus Loftus), Knight Grand Cross of the Most Honorable Order of the Bath, a Member of Her Majesty's Most Honorable Privy Council, Governor and Commander-in-Chief of the Colony of New South Wales and its Dependencies.

TO ALL TO WHOM THESE PRESENTS SHALL COME, greeting:

WHEREAS John Wintle, of the North Shore, near Sydney, in the Colony of New South Wales, furrier, hath by his Petition humbly represented to me that he is the author or designer of a certain invention or improvement in manufactures, that is to say, of an invention of "Improvements in Washing-machines," styled "Wintle's Washing-machine," which is more particularly described in the specification and the sheet of drawings which are hereunto annexed; and that he, the said Petitioner, hath deposited with the Honorable the Treasurer of the said Colony of New South Wales the sum of Twenty Pounds sterling, for defraying the expense of granting these Letters of Registration, as required by the Act of Council, sixteenth Victoria, number twenty-four; and hath humbly prayed that I would be pleased to grant Letters of Registration, whereby the exclusive enjoyment and advantage of the said invention or improvement might be secured to him for a period of fourteen years: And I, being willing to give encouragement to all inventions and improvements in the arts or manufactures which may be for the public good, and having received a report favourable to the prayer of the said Petition, from competent persons appointed by me to examine and consider the matters stated therein and to report thereon for my information, am pleased, with the advice of the Executive Council, and in exercise of the power and authority given to me by the said Act of Council, to grant, and do by these Letters of Registration grant unto the said John Wintle, his executors, administrators, and assigns, the exclusive enjoyment and advantage of the said invention or improvement, for and during the term of fourteen years from the date hereof; to have, hold, and exercise unto the said John Wintle, his executors, administrators, and assigns, the exclusive enjoyment and advantage thereof, for and during and unto the full end and term of fourteen years from the date of these presents next and immediately ensuing, and fully to be complete and ended: Provided always, that if the said John Wintle shall not, within three days after the granting of these Letters of Registration, register the same in the proper office in the Supreme Court, at Sydney, in the said Colony of New South Wales, then these Letters of Registration, and all advantages whatsoever hereby granted, shall cease and become void.

In witness whereof, I have hereunto set my sign manual, and have caused the present Letters of Registration to be sealed with the seal of the said Colony of New South Wales, at Government House, Sydney, in New South Wales, this second day of March, in the year of our Lord one thousand eight hundred and eighty.

[L.S.] AUGUSTUS LOFTUS.

SPECIFICATION.

Wintle's Washing-machine.

SPECIFICATION.

TO ALL TO WHOM THESE PRESENTS SHALL COME, I, JOHN WINTLE, of North Shore, Sydney, in the Colony of New South Wales, send greeting :

WHEREAS I am the author and inventor of an apparatus styled "Wintle's Washing-machine," and am desirous of obtaining Letters Patent securing to me Her Majesty's special license that I, my administrators, executors, or assigns, or such others as I, my administrators, executors, or assigns, may at any time agree with and no others, may use, exercise, or vend the same in the Colony of New South Wales, during the term of fourteen (14) years succeeding the date on which this instrument is left at the office of the Colonial Secretary, Sydney ; and whereas, in order to obtain the said Letters Patent, it is necessary that I particularly ascertain and describe the nature of my invention, and the manner in which its operations are performed :

Now know ye that I, John Wintle, do hereby describe the nature of my invention and the manner in which its operations are performed, in the following description, reference being had to the drawings hereunto annexed, and the letters and figures thereon indicating the parts referred to and here explained. My invention consists of an apparatus for washing textile fabrics by means of a cylinder with closed ends and corrugated periphery, all made water-tight, which is mounted on a frame, and caused to revolve by an ordinary crank or handle, or other suitable mechanism applied to the axis. The whole may be formed of either wood or metal, but I prefer to make the sides of wood and the cylinder of ordinary corrugated galvanized iron, the corrugations being so placed as to run parallel with the axis of the machine. A suitable door is provided by which the articles to be washed or cleaned may be put in and removed. I also affix, when desirable, on the interior, transverse bars armed with brushes for further scrubbing and to penetrate and clean the articles to be washed.

Fig. 1 represents a perspective view of the apparatus complete. Fig. 2 represents a sectional elevation of the cylinder. The same letters apply to the same parts in the different figures. AA is the framework for carrying the apparatus ; *a* is the corrugated periphery of cylinder ; *b* is the side of cylinder ; *c* is the axle of cylinder ; *d* is the door or lid ; *e* is the knob or handle to secure door ; *f f* are the brushes inside the cylinder *a* ; *g* is the handle by which motion is given to the cylinder.

Having now described my invention and the method of its operation, I claim for my invention—

Firstly—The application of a continuous corrugated surface for the washing of clothes, by forming the said corrugations on the interior periphery of a revolving cylinder.

Secondly—The combination of the above corrugated cylinder with one or more fixed brushes, applied substantially as shown on drawing.

In witness whereof, I, John Wintle, have to this specification set my hand and seal, this twentieth day of January, one thousand eight hundred and eighty.

JOHN WINTLE.

This is the specification referred to in the annexed Letters of Registration granted to John Wintle, this second day of March, A.D. 1880.

AUGUSTUS LOFTUS.

REPORT.

Sir, Sydney, 2 February, 1880.

We do ourselves the honor to report, in reply to your blank cover communication of the 22nd ultimo, No. 573, that we see no objection to the issue of Letters of Registration for "Improvements in Washing-machines," in accordance with Mr. John Wintle's Petition, specification, drawings, and claim.

We have, &c.,
GOTHER K. MANN.
EDMUND FOSBERY.

The Principal Under Secretary.

[Drawings—one sheet.]

J WINTLE'S

WASHING MACHINE

Fig 1.

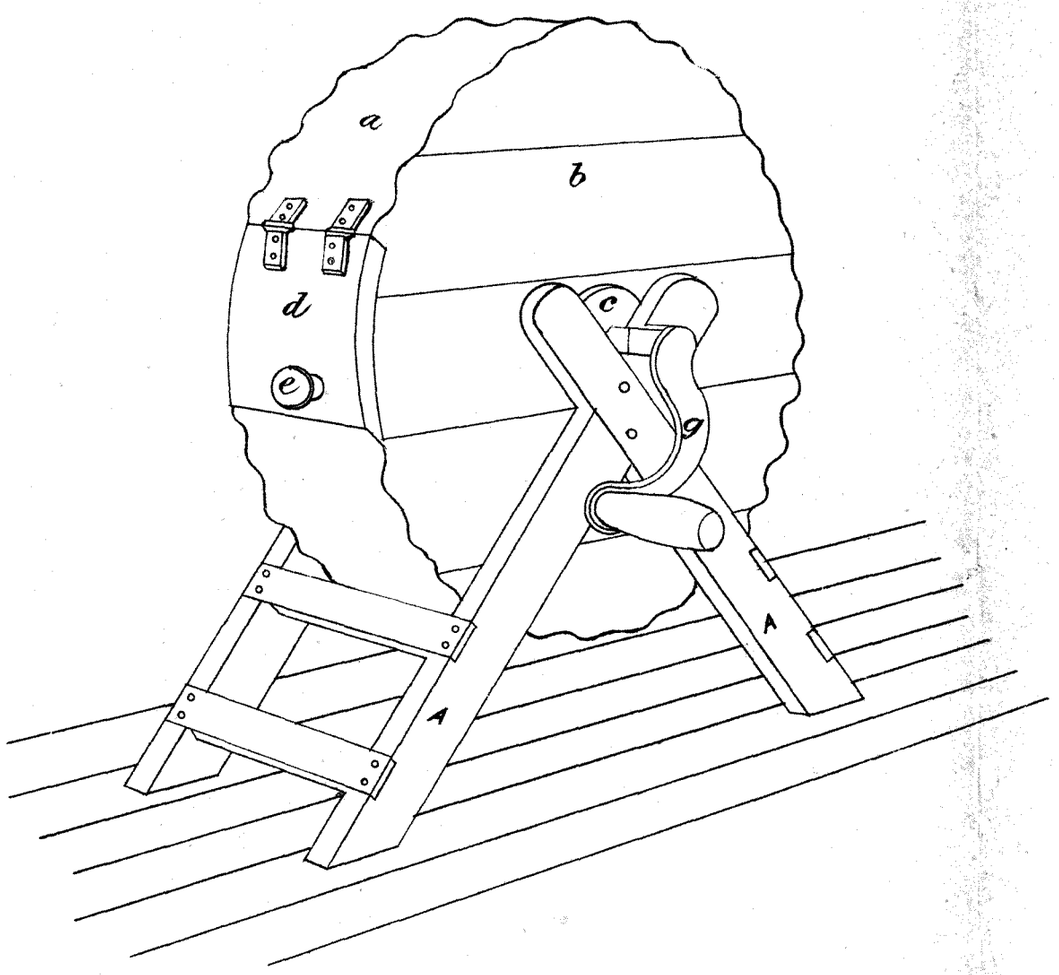

Fig 2.

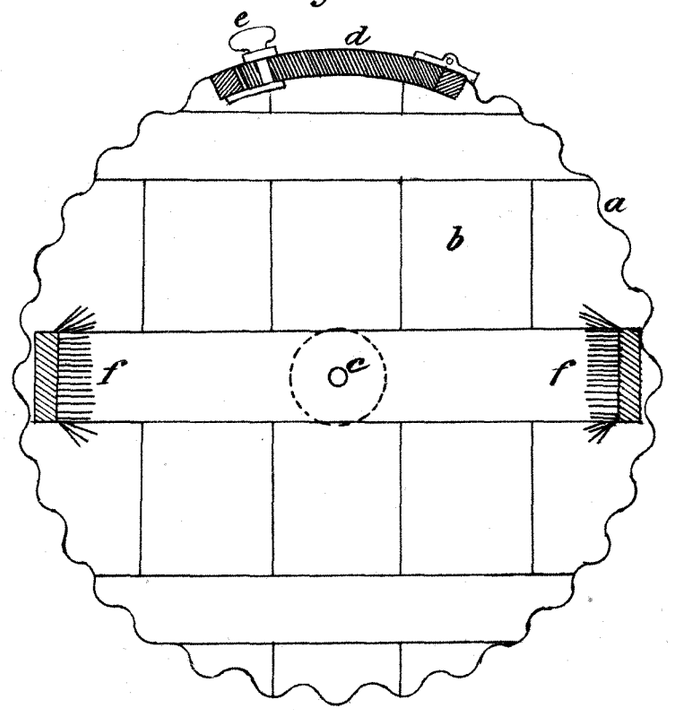

John Wintle

This is the Sheet of Drawings referred to in the annexed Letters of Registration, granted to John Wintle this Second day of March, A.D. 1880. Augustus Loftus.

(Sig. 357)

A.D. 1880, *4th March.* No. 807.

IMPROVEMENTS IN SEWING-MACHINES.

LETTERS OF REGISTRATION to George Baldwin Woodruff, Alexander Anderson, Spencer Mort, and George Browning, for Improvements in Sewing-machines.

[Registered on the 4th day of March, 1880, in pursuance of the Act 16 Vic No. 24.]

BY His Excellency the Right Honorable Sir Augustus William Frederick Spencer Loftus (commonly called Lord Augustus Loftus), Knight Grand Cross of the Most Honorable Order of the Bath, a Member of Her Majesty's Most Honorable Privy Council, Governor and Commander-in-Chief of the Colony of New South Wales and its Dependencies.

TO ALL TO WHOM THESE PRESENTS SHALL COME, greeting:

WHEREAS George Baldwin Woodruff, of Cheapside, in the city of London, engineer, Alexander Anderson, Manager of the Singer Manufacturing Company's Works, Glasgow, in the county of Lanarth, North Britain, and Spencer Mort and George Browning, both of Glasgow aforesaid, tool-makers and engineers, have by their Petition humbly represented to me that they are the authors or designers of a certain invention or improvement in manufactures, that is to say, of an invention of "Improvements in Sewing-machines," which is more particularly described in the specification, marked A, and the seven sheets of drawings, marked B, C, D, E, F, G, and H, respectively, which are hereunto annexed; and that they, the said Petitioners, have deposited with the Honorable the Treasurer of the said Colony of New South Wales the sum of Twenty Pounds sterling, for defraying the expense of granting these Letters of Registration, as required by the Act of Council, sixteenth Victoria, number twenty-four; and have humbly prayed that I would be pleased to grant Letters of Registration, whereby the exclusive enjoyment and advantage of the said invention or improvement might be secured to them for a period of fourteen years: And I, being willing to give encouragement to all inventions and improvements in the arts or manufactures which may be for the public good, and having received a report favourable to the prayer of the said Petition, from competent persons appointed by me to examine and consider the matters stated therein and to report thereon for my information, am pleased, with the advice of the Executive Council, and in exercise of the power and authority given to me by the said Act of Council, to grant, and do by these Letters of Registration grant unto the said George Baldwin Woodruff, Alexander Anderson, Spencer Mort, and George Browning, their executors, administrators, and assigns, the exclusive enjoyment and advantage of the said invention or improvement, for and during the term of fourteen years from the date hereof; to have, hold, and exercise unto the said George Baldwin Woodruff, Alexander Anderson, Spencer Mort, and George Browning, their executors, administrators, and assigns, the exclusive enjoyment and advantage thereof, for and during and unto the full end and term of fourteen years from the date of these presents next and immediately ensuing, and fully to be complete and ended: Provided always, that if the said George Baldwin Woodruff, Alexander Anderson, Spencer Mort, and George Browning, shall not, within three days after the granting of these Letters of Registration, register the same in the proper office in the Supreme Court, at Sydney, in the said Colony of New South Wales, then these Letters of Registration, and all advantages whatsoever hereby granted, shall cease and become void.

In witness whereof, I have hereunto set my sign manual, and have caused the present Letters of Registration to be sealed with the seal of the said Colony of New South Wales, at Government House, Sydney, in New South Wales, this fourth day of March, in the year of our Lord one thousand eight hundred and eighty.

[L.S.] AUGUSTUS LOFTUS.

Improvements in Sewing-machines.

A.

SPECIFICATION.

TO ALL TO WHOM THESE PRESENTS SHALL COME, we, GEORGE BALDWIN WOODRUFF, of Cheapside, in the city of London, engineer, ALEXANDER ANDERSON, Manager of the Singer Manufacturing Company's Works, Glasgow, in the county of Lanark, North Britain, SPENCER MORT and GEORGE BROWNING, tool-makers and engineers, both of Glasgow aforesaid, send greeting:

WHEREAS we are desirous of obtaining Letters of Registration under the sign manual and seal of the Colony of New South Wales, for the exclusive enjoyment and advantage, for a period of fourteen years, of an invention for "Improvements in Sewing-machines," of which we are the first and true inventors: Now know ye, that the nature of the said invention, and the manner in which the same is to be performed, is particularly described and ascertained in and by the following statement (that is to say):—

This invention relates to improvements in that class of sewing-machines which has an arm in lieu of a table for supporting the work, and is fitted with a circular reciprocating shuttle. The improvements consist, firstly, in novel means for driving the shuttle; secondly, in novel arrangements of mechanism for producing a universal top feed; and thirdly, in a novel construction of throat plate.

It is important that the arm which is to receive the work should be small, and that the vertical needle which presents its loop to the locking shuttle thread should work as near as possible to the end of the arm, in order to facilitate the manipulation of the materials being sewn.

Generally the arms of such machines have proved too large for boot work, in consequence of the working mechanism for driving the shuttle taking up too much space.

Thus, when a rack and pinion has been used for giving axial motion to the shuttle-driver, space was required within the hollow arm and beyond the arm to allow for the thrust of the rack, and when this simple mechanism was replaced by intermediate spur gearing the advantage of a direct motion was lost.

We now propose to actuate the shuttle-driver directly by mechanism which will not protrude beyond the arm, and we are thus enabled to use an arm which will permit of the needle working close to its extremity, and of sewing close to the edge of a boot sole.

In the accompanying drawings we have shown in various views the manner of effecting the above-mentioned object; we have also shown a means for preventing the back lash or slip in the gearing which is occasioned by the wearing of the teeth of the racks and pinions.

In sheet I of the drawings, fig. 1 shows in inverted plan view, and fig. 2. in vertical section, so much of a sewing-machine as will serve to explain one mode of working the shuttle-driver according to our invention.

In these figures, A is the arm, in the extremity of which is a circular recess for receiving the circular shuttle and the shuttle-driver B. This shuttle-driver consists, as usual, of a disc with a driving stud or pin near the edge thereof for taking into a recess in the shuttle. This shuttle-driver is mounted on a spindle, which is fitted at its lower end with a pinion, C. In gear with this pinion is an endless chain, D, which extends back to a tension chain wheel, E, mounted in an adjustable bracket bearing, E^1. This chain D, instead of being composed wholly of links, is for convenience made up in part of two long link rods, D^1, and to one of these is attached two transverse pieces, *d d*, which form a guide for a sliding block, d^1. Projecting from this sliding block is a pin which enters a hole in the end of a rock lever, F, by which a reciprocating motion is imparted to the chain D.

This rock lever may receive its motion from a rotating cam similar to that hereafter referred to, or it may be drawn in any other convenient manner. The bracket arm which carries the tension pinion E is pivoted to the casting A at *e*, and it is slotted transversely to receive a binding screw, e^1, which passes through it and enters a tapped hole in the casting A. By slackening this screw e^1 the tension pulley E may be adjusted, and its position can then be secured by tightening up the binding screw e^1.

Fig. 3 shows a slight modification of the mechanism just described for transmitting motion to the shuttle-driver. In this case the chain takes the form of jointed rack teeth; thus, to the end of a reciprocating rack, D^1, jointed teeth D are attached, the same being so constructed as to slide within a circular recess in which the pinion of the shuttle-driver is situate, and thus remain in gear with the pinion C of the shuttle-driver.

Figs. 4 and 5 show in inverted plan view and section the rack bar D^1, connected through the jointed links D with the shuttle-driver, without the intervention of a pinion, the last link of the chain being jointed to a lug on a disc or collar keyed to the axle of the shuttle-driver. The action of this arrangement is precisely similar to that shown at fig. 3.

In sheet II, fig. 6 is a vertical section, and fig. 7 an inverted plan view of another mode of transmitting motion directly to the shuttle-driver, and within the prescribed limits above indicated. In this case a crank plate, C, is fitted on the axle of the shuttle-driver B, and a similar crank plate on the axle of a reciprocating driving pinion, E, is connected with the crank plate C by means of a rocking link bar, D. This link bar is slotted longitudinally at about the middle of its length to receive a fixed fulcrum pin, *d*, projecting from the underside of the arm A; over this pin the bar D slides, and upon it the bar rocks as on a moving fulcrum. The driving pinion E receives its motion from a segment rack, F, forming part of a rock lever, F^1, which carries at its opposite end a bowle that works in the groove of a rotating cam, G, on the cam shaft of the sewing-machine; in this way we are enabled as before to work the shuttle-driver within the contracted space provided in the arm A, and which admits of the needle working close to the end of the arm.

In sheet III, fig. 8 shows in sectional elevation, and fig. 9 in inverted plan view, so much of a sewing-machine as will explain a further modification of our invention.

On either side of the pinion C of the shuttle-driver a rack, D, is provided, which racks extend rearwards to the main driving mechanism of the machine, and gear with a pinion, E, to which a reciprocating axial motion is imparted by a rock lever, F, and cam, G, as before explained. These racks are so adjusted that they will alternately take into and drop out of gear with the teeth of the pinion C, and thus one rack will follow up the action of the other, thereby driving the pinion alternately from opposite sides. By thus dividing the driving motion, the racks keep within the line of the arm A.

Fig.

Fig. 10 shows in inverted plan the two racks connected together by a flexible band, *d*, in which case one rack only is needed to extend back to the pinion E or other driver.

To provide a lateral adjustment for the racks, adjusting screws, *a*, are tapped into the sides of the arm A (see fig. 9), and caused to bear upon steel plates, a^1, rebated into the arm, and forming bearing pieces over which the racks D slide.

Fig. 11 shows in inverted plan view a further modification of our mode of driving circular shuttles with racks. In this example, one rack D is used as a driver, which besides gearing into and driving the pinion C of the shuttle-driver, will drive a second rack, D^1, gearing into that pinion and taking also into a second pinion, C^1, which receives motion from the driving rack D.

This arrangement ensures that the shuttle-driver, when the shuttle is required to take up the loop of the needle thread, shall be driven directly from the main driving rack, in order to prevent any irregularity due to back lash, and it is the complement only of the motion of the shuttle that is obtained from the second rack D and supplementary pinion C^1.

In this arrangement, as in the arrangement first shown at figs. 8 and 9, the racks will gear alternately with the pinion of the shuttle-driver.

Fig. 11 shows also a slight modification in the means for setting up the racks in gear with the pinions. In this instance the adjusting screws *a* are provided with flat heads, which bear against the back of the racks and serve the purpose of the steel plates a^1 of fig. 9. The screws are nicked at their points, to permit of their being adjusted from outside the arm A.

Sheet IV shows the same arrangement of shuttle-driver as that described with reference to figs. 8 and 9, sheet III, but in this instance the racks terminate at the driving end of the machine in cranked slotted ends, and are connected together by a rock lever, D^2, fitted at its extremities with pins which enter the transverse slots in the cranked ends of the racks. This coupling together of the racks is for the purpose of imparting motion to both simultaneously, which motion is communicated through a rock lever, F, connected by a link, *f*, to one of the racks. In all the foregoing arrangements it will be seen that the shuttle-driver is actuated in the most important part of its movement (namely, that in which the shuttle enters the loop of the needle thread) by the direct action of a rack or its equivalent, thus securing the advantage of the direct-acting rack without the disadvantage of its protruding beyond the arm towards the end of its stroke, the driving mechanism working within the arm, and the liability of the shuttle working out of time being effectually removed.

Under this head of the invention we claim—

The arrangement of mechanism above described for actuating the driver of circular shuttles within the contracted space provided by the arm which supports the work.

The object of the second head of the invention is to simplify the construction and improve the action of universal top feeds.

In sheets V and VI we have shown one arrangement of mechanism for carrying out these objects.

Fig. 12 is a side elevation of the head of a sewing-machine with our improvements applied thereto, and fig. 13 is an end elevation of the same, a portion of the arm for carrying the work being also shown in both figures. Fig. 14 is a sectional elevation of the head of the machine taken on the line 1, 2, of fig. 13, and fig. 15 is a sectional elevation of the head taken in the line 3, 4, of fig. 12. In these figures, A is the bracket arm carrying the hollow cylindrical head A^1 of the machine, and B is the arm on which the work is supported, and in which the circular shuttle carrying the locking thread is fitted.

The head A^1 of the machine is bored out vertically to receive a sleeve shaft, C, which carries the presser and feeding foot D; this sleeve shaft is capable of adjustment axially in the socket of the head A, so as to present the feeding and presser-foot to the work at any desired angle with respect to the table or work-supporter B.

Through the centre of this sleeve shaft passes the vertical needle-bar E, which is free to slide up and down therein. Through this needle-bar a hole is drilled longitudinally to allow of the thread being passed down it to the needle; this needle-bar is operated by a crank pin, *e*, projecting from the face of a cam on the horizontal cam shaft F. This pin *e* takes into a slotted cam plate carried by a rod, E^1, pendent from a crosshead which connects it rigidly with the needle-bar; this rod E^1 slides in a guide in the head A^1, and as it rises and falls under the action of the crank pin *e*, it will impart the like motion to the needle-bar.

The sleeve shaft C has received into it the presser foot bar D, which is connected at its upper end with a lifting spring, *d*, bearing on the top of the sleeve shaft. This bar D, shown detached in side and edge views at fig. 16, is slotted longitudinally near its lower end, as at d^1, to receive an adjustable pin, d^2, fig. 15, which couples it to a slotted forked rock lever, D^1, pivoted to the lower end of the sleeve shaft D, and shown detached in side and plan views at fig. 17. Fitted to the head of the machine is a sliding bar, D^2, carrying projecting pins, between which lies the end of a strong spring, D^3, which is made fast to the bracket arm A, and is intended to impart a downward pressure to the pressing and feeding foot. The sliding bar D^2 carries at its upper end a bracket extension, which surrounds the needle-bar and serves to press upon the top end of the feed-bar, in whatever position that bar may stand in respect to the work-table. By this means the requisite pressure is applied to the feeding foot for holding down the work.

In order to rock the presser-foot while it is in contact with the work, and thereby to feed the work forward under the needle, the slotted forked lever D^1 is brought into action by the following means:—The short horizontal arm of this lever is embraced by a horizontal ring, G, situated below the head A, and concentric therewith. This ring is capable of sliding vertically, it being provided with guide-pins, G, for that purpose, which enter guides formed in the head of the machine. This ring is embraced by and held fast in the forked end of a bell-cranked lever, G^2, by means of pivot screws, which lever is hinged to horns projecting from the head of the machine. A bowle on the upper end of this forked lever enters a cam, F^1, which carries the crank-pin *e* before mentioned; when therefore the smaller radius of this cam comes into action upon the bowle the lever will be rocked, and the ring which it carries will be caused to depress the horizontal arm of the slotted rock lever D^1, and thereby through its connection with the presser-bar force the

the foot of the presser-bar forward a distance equal to the length of a stitch ; when this has been effected it will be necessary to take the pressure off the foot, to permit of its being returned to its starting position. To this end a lever, H, shown detached at fig. 18, is provided ; this lever has its fulcrum at *h* at one side of the head, and passing through the head, which is recessed for that purpose, it extends over a cam, F^2, on the cam shaft, and dips under the presser spring D^3, as shown best at fig. 12. As the cam F^2 comes in contact with the lever H the latter will be lifted, and with it the pressing end of the spring D^3, thus the bar will be relieved from the downward pressure of the spring D.

The small spring *d* on the sleeve shaft, which is connected with the presser-bar, being now free to act, will lift the bar and thus raise the presser-foot clear of the work. The continued rotation of the grooved cam F^1 will now return the presser-foot to its starting position, and the presser spring D^3 being left free to act will again bear down the presser-bar and hold the presser-foot firmly in contact with the work.

The screw d^2, which couples the presser-bar with the slotted rock shaft, is carried by a sliding clip, d^3 provided with a spring, d^4, against which a clamping screw bears for the purpose of holding the coupling screw in its adjusted position, the object of adjusting it being to obtain any desired variation in the feed or length of stitch. This clamping screw being elongated constitutes a handle, d^5, which serves for turning the sleeve shaft, and thereby determining the direction of the feed.

The head A^1 near it lower end (see fig. 14) is notched to receive the head of a spring locking pin, *e*, which is fitted into the sleeve shaft for the purpose of securing the same in its adjusted position.

In sheet III we have shown a novel arrangement of universal top feed, in which a central cone is used for rocking the presser foot bar and giving the feed motion thereto. Fig. 19 is a front view of the head of the sewing-machine with the detachable cover removed, to show the arrangement of internal parts as modified according to our invention, and fig. 20 is a vertical section taken through the centre of the head at right angles to fig. 1 ; the arm for carrying the work is also indicated in both figures.

In these figures, A is the bracket arm cast with a semi-cylindrical recess at its extremity, with lugs to receive screws for connecting a semi-cylindrical cap piece or cover A^1 thereto, and thus completing the case of the head. This case is fitted at its lower end with a cylindrical block, B, which is bored centrally to receive a reciprocating tube through which the needle-bar C passes.

The upper end of this needle-bar slides through the upper end of a casting, D, which fits in the surrounding casing so as to have a free end way or vertical motion therein. This casting is held down by the pressure of a spring, E, made fast to the bracket arm, and resting on the head of a pin, D^1, which is embraced by a forked projection of the casting D. This pin slides in a guide formed for it in the bracket arm, and rests upon a lifting cam, F^1, on the cam shaft F.

The form of the web of the casting D which unites the top and bottom is semi-cylindrical and slotted to act as a guide for the crosshead H^1 ; the casting D terminates at bottom in a circular disc which presses upon the pendent arm or presser-bar G in any position in which the arm G may be turned by the block B. The casting D or presser disc is lifted at every revolution of the cam F^1 acting on the cam spindle D^1.

In the block B an annular groove is turned to receive a rib or annular projection on the inner periphery of the casing of the head. This rib, shown at *a*, serves to maintain the cylindrical block B in position vertically, while it leaves it free to be turned axially.

A vertical slot is made in this block B to receive the pendent arm G which carries the presser-foot. This arm is supported and kept in contact with the presser disc D in the vertical slot of the block B, by means of a coiled spring, *g*, which rests in the block and bears on the underside of a cross pin in the arm. The arm G is enlarged at its upper end by rounded extensions reaching to the full depth of the slot in the cylindrical block B, to allow of its rocking, as on a ball joint, without interfering with its vertical motions. A hollow handle, B^1, attached to the bottom of the block B, and projecting horizontally therefrom, enables the attendant to turn the block B in its bearing, and thus to point the feed foot in any desired direction. The needle-bar is operated in the well-known manner, by means of a crank pin projecting from a cam, F^2, on the cam shaft working into a cam plate, C^1, made fast to the needle-bar. The tube which surrounds the needle-bar C terminates in a cone, H, the use of which is to give the feed motion to the presser foot ; this it does by pressing on the chamfered end of a sliding piece, *b*, which embraces the presser-foot and works in horizontal guides formed in the block B. The cone tube H depends from a crosshead, H^1, which slides in vertical guides formed for it in the casting D. A coiled spring surrounding the cone tube and resting on the block B bears on the underside of this crosshead, and thus gives the cone tube a tendency to rise when not held down in contact with the slide *h*, by the means to be presently explained. Hinged to the top of this crosshead H^1 is an arm, H^2, which carries a bowle that underlies the cam F^2.

The position of this bowle with respect to the crosshead H^1 is determined by an adjusting screw, H^3, which works in the end of the crosshead H^1, and bears through its conical point on the underside of the hinged arm H^2. The turning of this screw will slightly raise or lower the arm H^2, and thus determine the amount of depressing motion which the cam shall impart at every rotation to the cone tube. It will be understood that, as the lever H^2 is raised or lowered in relation to the cross head H^1, by means of the regulator screw H^3, the cone tube H comes more or less in contact with the sliding piece *h*, and thus the feed motion, and consequently the length of stitch produced by the machine, will be increased or diminished. The screw is fitted with a clamping nut to maintain the adjustment of the screw. When the pressure of the cone tube is taken off the slide *h* it will be necessary to return the feed and presser-foot to its back position. This is effected by means of a sliding pin fitted in the hollow handle B^1, and bearing on the front of the arm G under the pressure of a coiled spring contained in the hollow handle. For lifting the presser-foot from the work a cam lever, I, is provided, the same being pivoted to the side of the sliding casting D, and bearing on the top of the casing A^1. The lifting of this lever will cause the casting D to rise, and with it the arm G, which is attached thereto by an elastic connection as already explained.

Under the second head of the invention we claim—

1st—In combination with the sleeve shaft C (which carries the presser-bar and is free to turn axially for changing the direction of the feed), the needle-bar E, and the rod E^1 connected therewith, for transmitting the requisite reciprocating motion to the needle-bar, as above explained.

2ndly—

2ndly—The universal feed arrangement, consisting of the sleeve shaft C carrying the slotted forked lever D^1, which is rocked by a horizontal ring, G, surrounding it, and receiving motion from a reciprocating fork lever, G^2, such rock lever D^1 serving to carry the presser foot bar D, by means of an adjustable fulcrum pin, d^2, which bar is recessed into the sleeve shaft C and turns therewith.

3rdly—In combination with the sliding clip d^3 which carries the fulcrum pin d^2, the friction spring d^4 and clamping screw d^5, as and for the purpose above explained.

With reference to sheet VII of the drawings we claim—

4th—In combination with the cone tube H carried by the crosshead H^1, the sliding piece h which acts on the feeding foot bar and the hinged arm H^2 supported by the adjusting screw H^3, as and for the purpose above explained.

5th—In combination with the presser disc or casting D, the pendent pin D^1 for transmitting motion thereto from the cam shaft, as and for the purpose above explained.

Our last improvement consists in making the throat plate to swivel in its seat, and to present, when desired, an open part or skeleton frame to the shuttle in place of the usual solid cover.

This improvement is illustrated in plan view at fig. 12^a, sheet V, and also in edge view at fig. 12. In these figures x is the throat plate pivoted to the work-supporting arm at y, and capable of turning on that pivot to bring either end of the plate under the vertical needle. Equidistant from this pivot are two holes for receiving a snap stud, z, which is attached to the arm, and by projecting into a hole in the plate secures the same in position. A modification of this arrangement is shown at figs. 20 and 20^a, sheet VII, where instead of the snap stud projecting through the plate, a pin carried by a pressure spring locks the plate in position by entering holes on the underside thereof. This skeleton frame will serve to retain the shuttle in place, and at the same time allow the attendant to examine its working.

Under this head of the invention we claim—

The swivel throat plate x formed with a skeleton end, as and for the purpose above explained.

In witness whereof, we, the said George Baldwin Woodruff, Alexander Anderson, Spencer Mort, and George Browning, have hereunto set our hands and seals, the sixth day of October, in the year of our Lord one thousand eight hundred and seventy-nine.

GEO. B. WOODRUFF.
ALEXR. ANDERSON.
SPENCER MORT.
GEORGE BROWNING.

This is the specification, marked A, referred to in the annexed Letters of Registration granted to George Baldwin Woodruff, Alexander Anderson, Spencer Mort, and George Browning, this fourth day of March, A.D. 1880.

AUGUSTUS LOFTUS.

REPORT.

Sydney, 2 February, 1880.

Sir,

We do ourselves the honor to state that we see no objection to the issue of Letters of Registration in favour of Messrs. George Baldwin Woodruff, Alexander Anderson, Spencer Mort, and George Browning, for their invention, "Improvements in Sewing-machines," in accordance with their specification, Petition, drawings, and claims, transmitted for our report under your blank cover communication of the 21st ultimo, No. 515.

We have, &c.,
GOTHER K. MANN.
E. C. CRACKNELL.

The Principal Under Secretary.

[Drawings—seven sheets.]

"B"

[807]

Sheet 1.

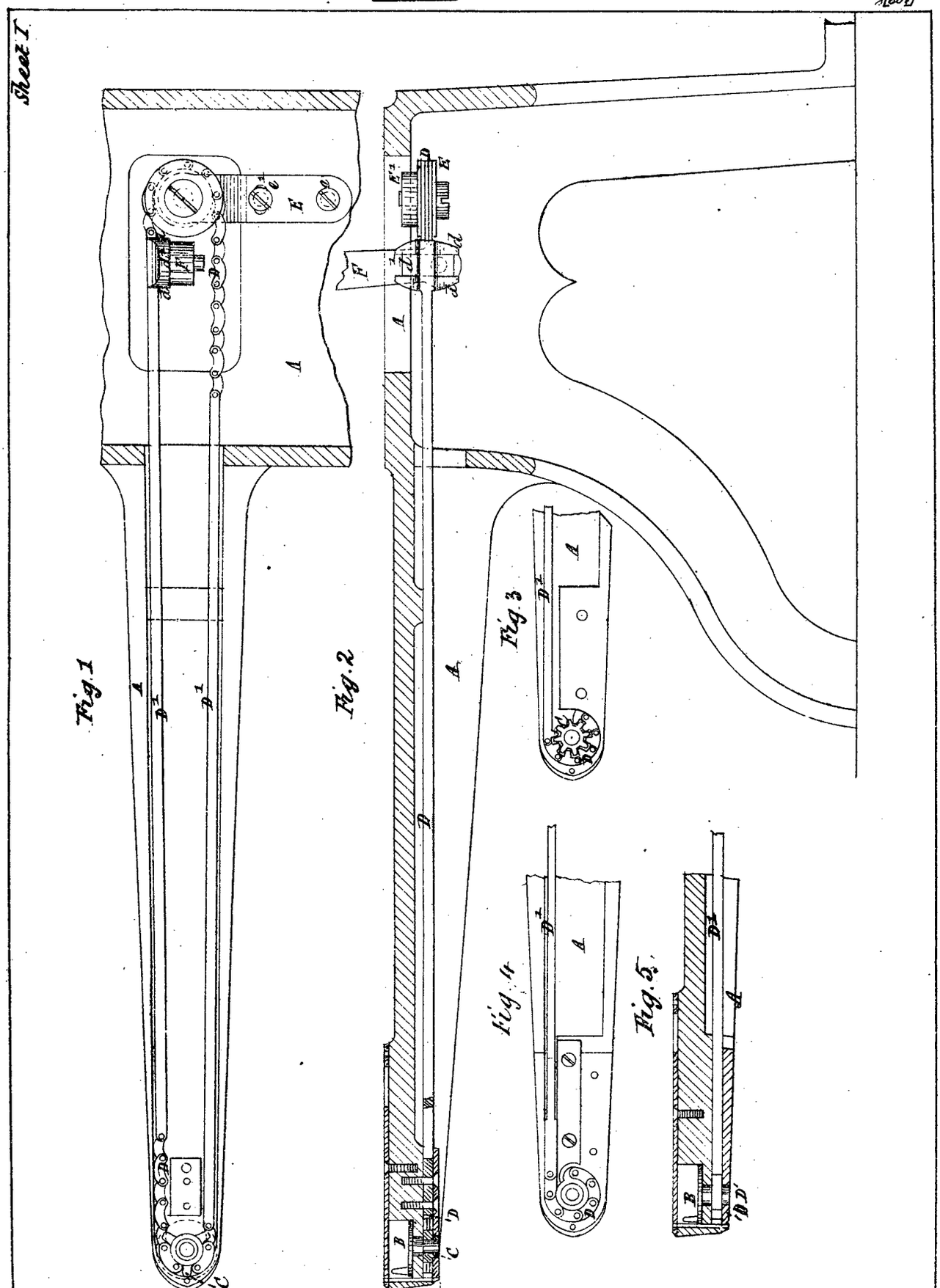

This is the Sheet of Drawings marked "B" referred to in the annexed Letters of Registration granted to George Baldwin Woodruff, Alexander Anderson, Spencer Mort and George Browning bearing date this fourth — day of March — A.D. 1880.

(Sig. 357)

"Augustus Loftus".

PHOTO-LITHOGRAPHED AT THE GOVT. PRINTING OFFICE, SYDNEY, NEW SOUTH WALES.

"C"

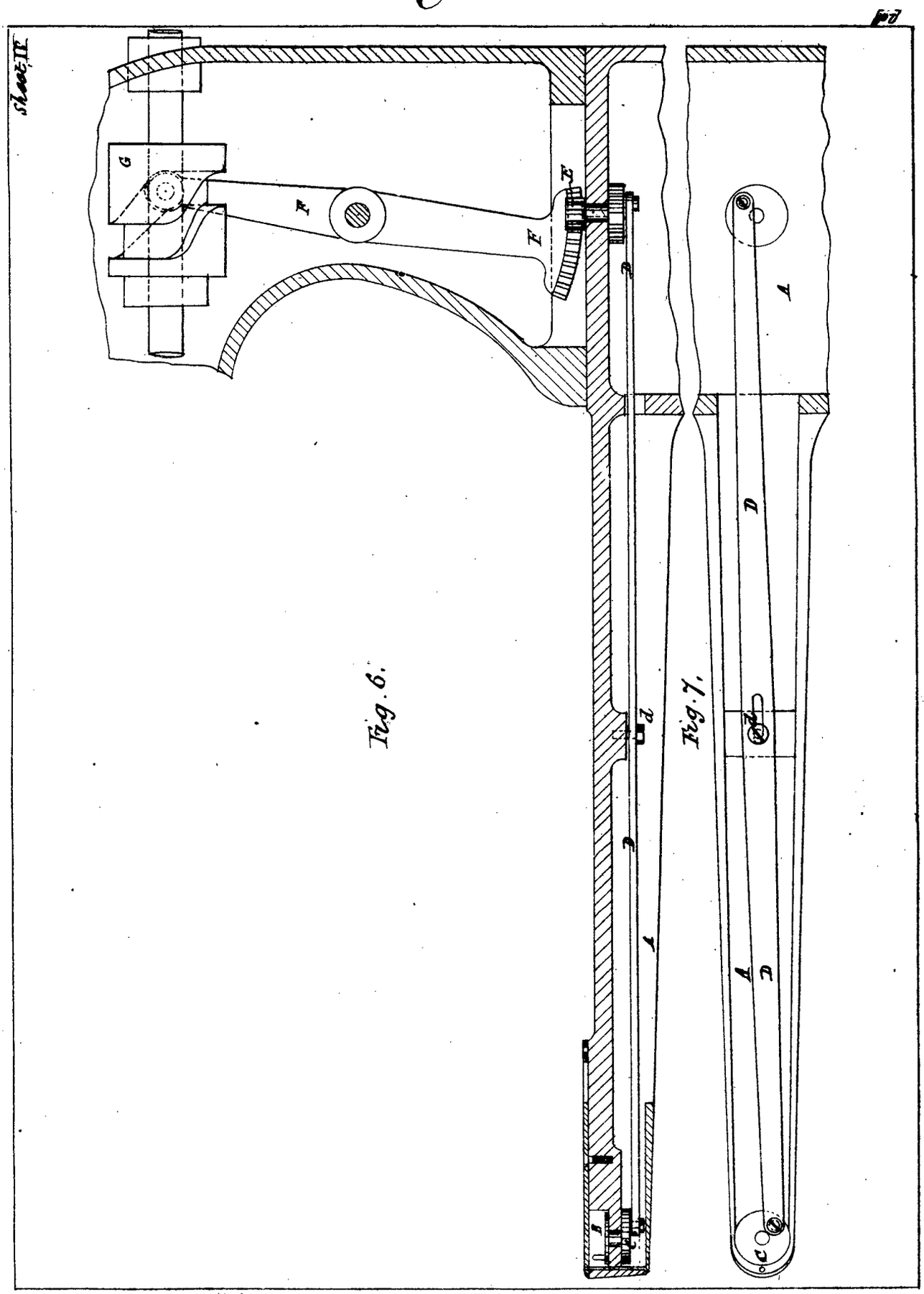

Fig. 6.

Fig. 7.

This is the Sheet of Drawings marked "C" referred to in the annexed Letters of Registration granted to George Baldwin Woodruff, Alexander Anderson, Spencer Mort and George Browning dated this fourth — day of March — AD 1880.

(Sig: 357)

"Augustus Softus"

PHOTO-LITHOGRAPHED AT THE GOVT. PRINTING OFFICE, SYDNEY, NEW SOUTH WALES.

D

[807]

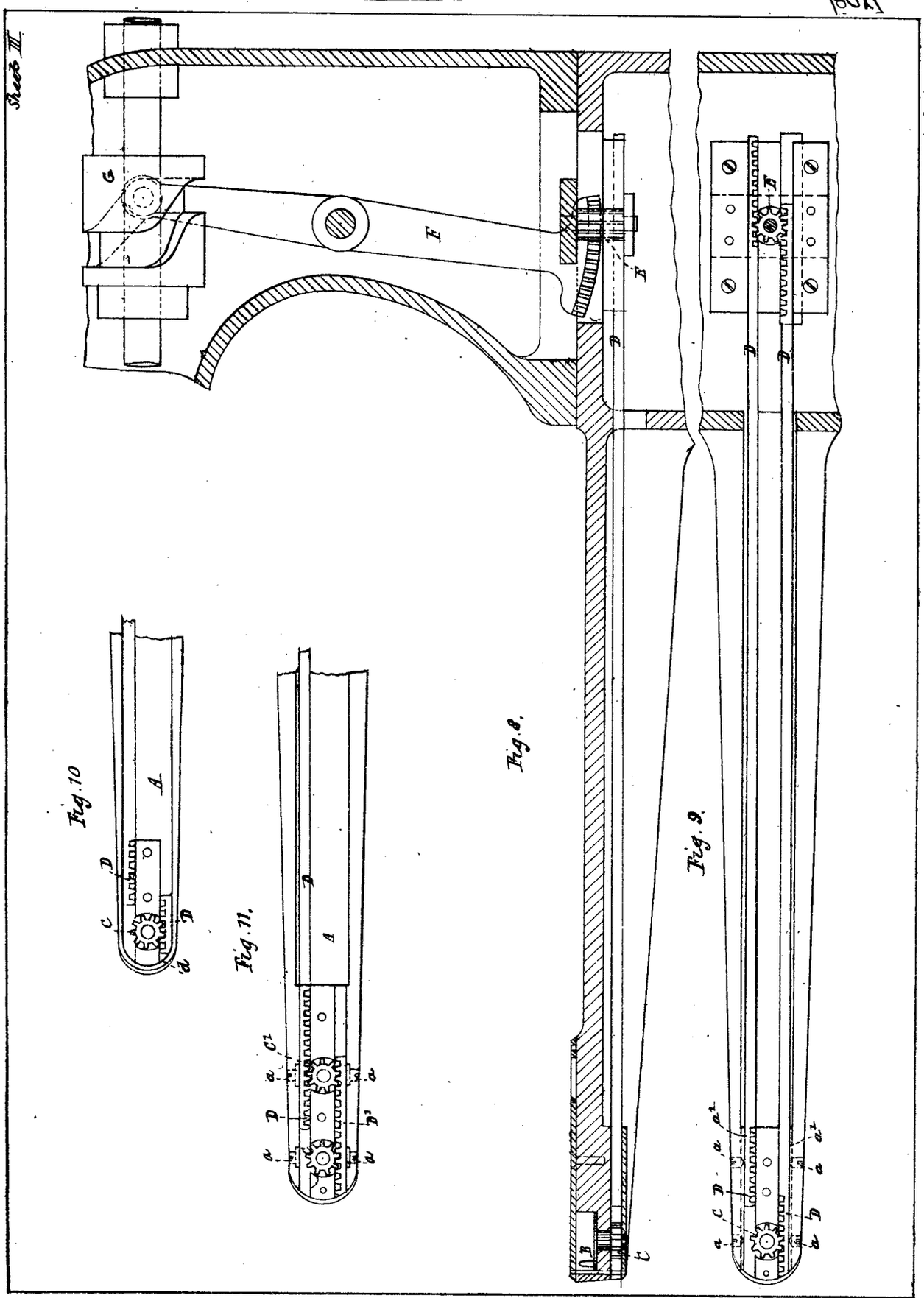

This is the Sheet of Drawings marked "D" referred to in the annexed letters of Registration granted to George Baldwin Woodruff, Alexander Anderson, Spencer Mort and George Browning this fourth day of March A.D. 1880.

(Sig. 357)

"Augustus Loftus."

PHOTO-LITHOGRAPHED AT THE GOVT. PRINTING OFFICE.
SYDNEY NEW SOUTH WALES

'E'

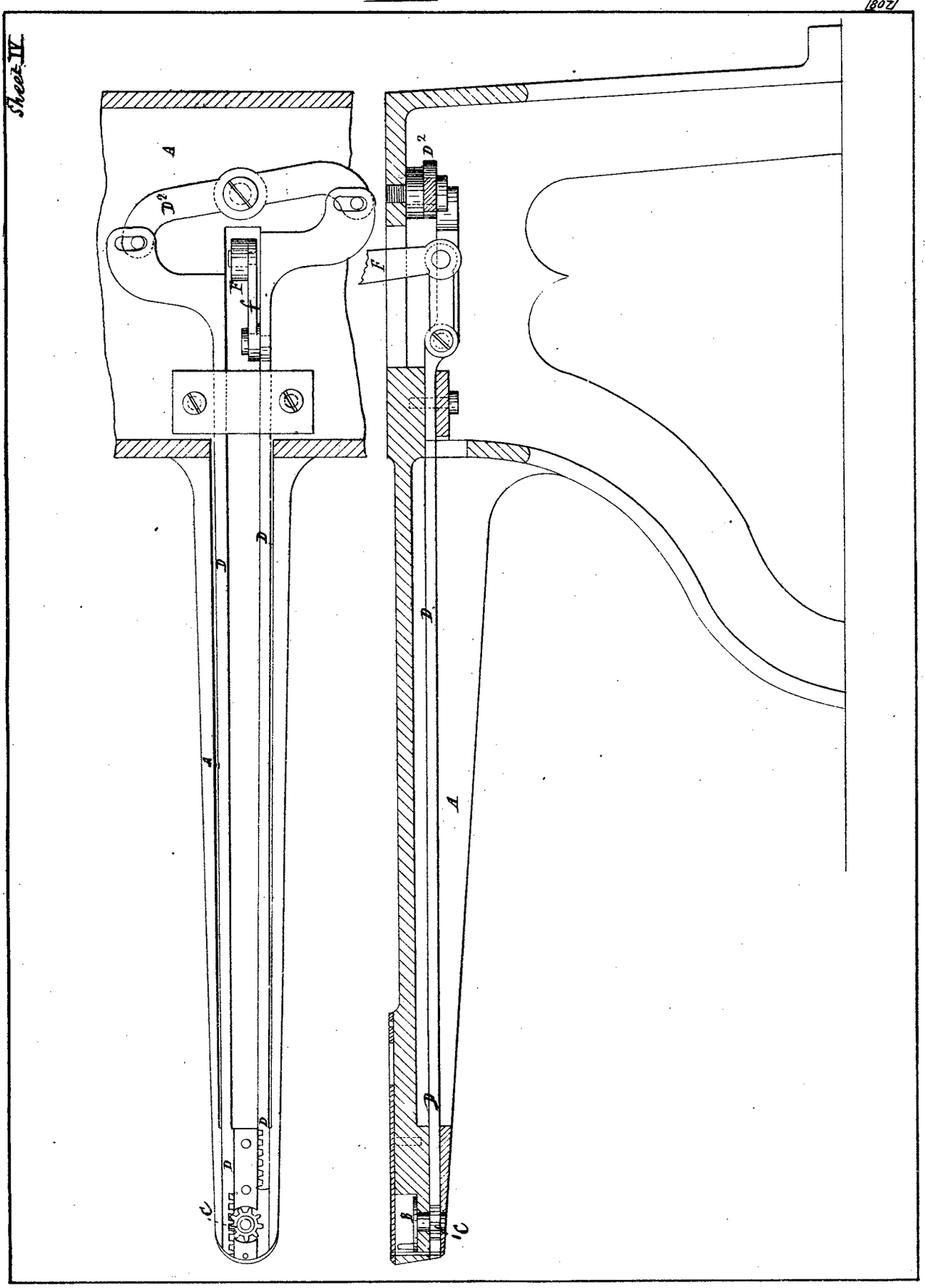

This is the Sheet of Drawings marked "E" referred to in the annexed Letters of Registration granted to George Baldwin Woodruff, Alexander Anderson, Spencer Mort and George Browning this fourth day of March AD 1880

(Sig. 357)

PHOTO-LITHOGRAPHED AT THE GOVT. PRINTING OFFICE, SYDNEY, NEW SOUTH WALES.

"Augustus Loftus"

"F"

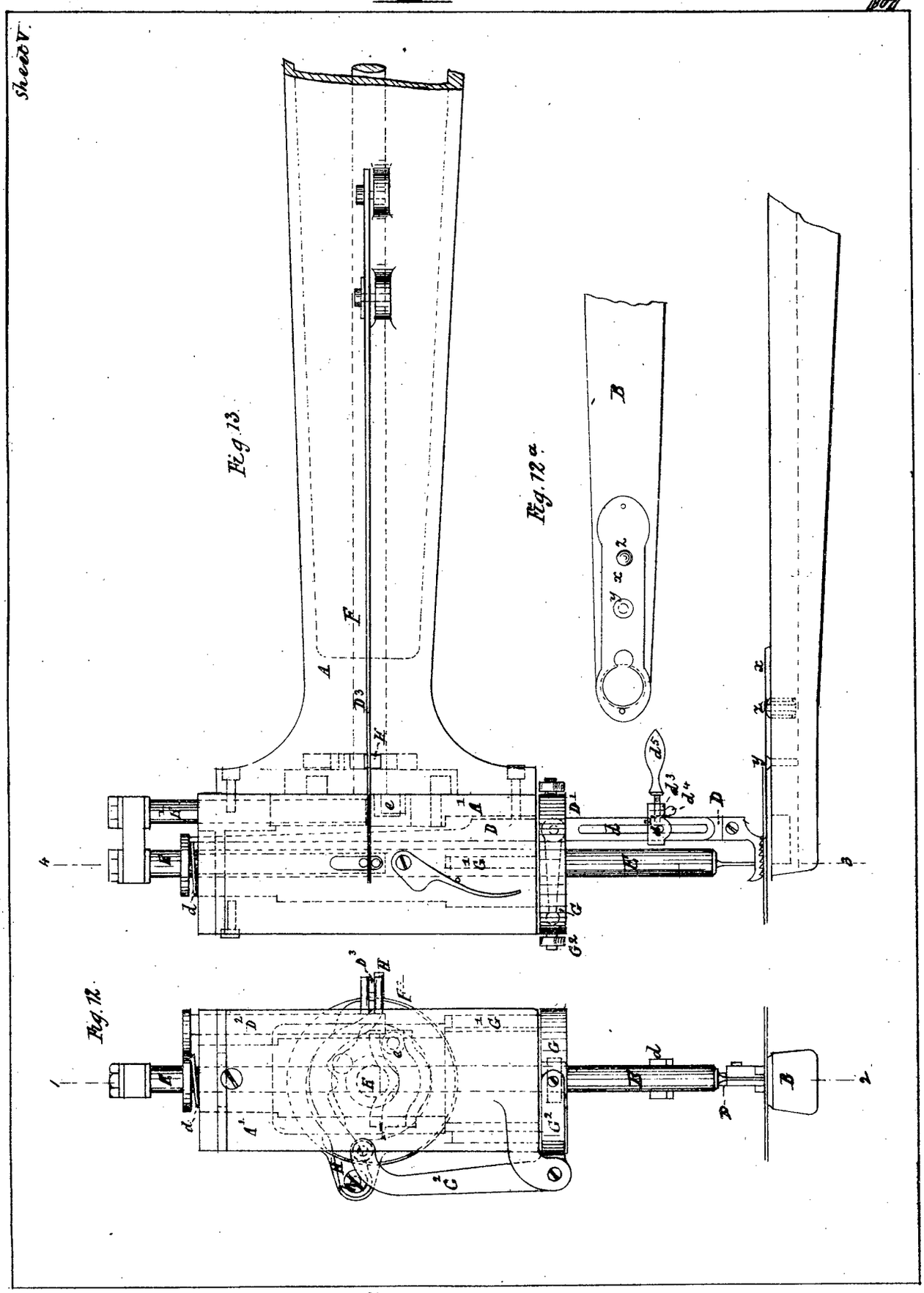

This is the Sheet of Drawings marked "F" referred to in the annexed Letters of Registration granted to George Baldwin, Woodruff, Alexander Anderson, Spencer Hart and George Browning this fourth day of March 1888

(Sig: 357)

"Augustus Loffus"

PHOTO-LITHOGRAPHED AT THE GOVT. PRINTING OFFICE, SYDNEY, NEW SOUTH WALES.

"G"

[007]

Sheet VI

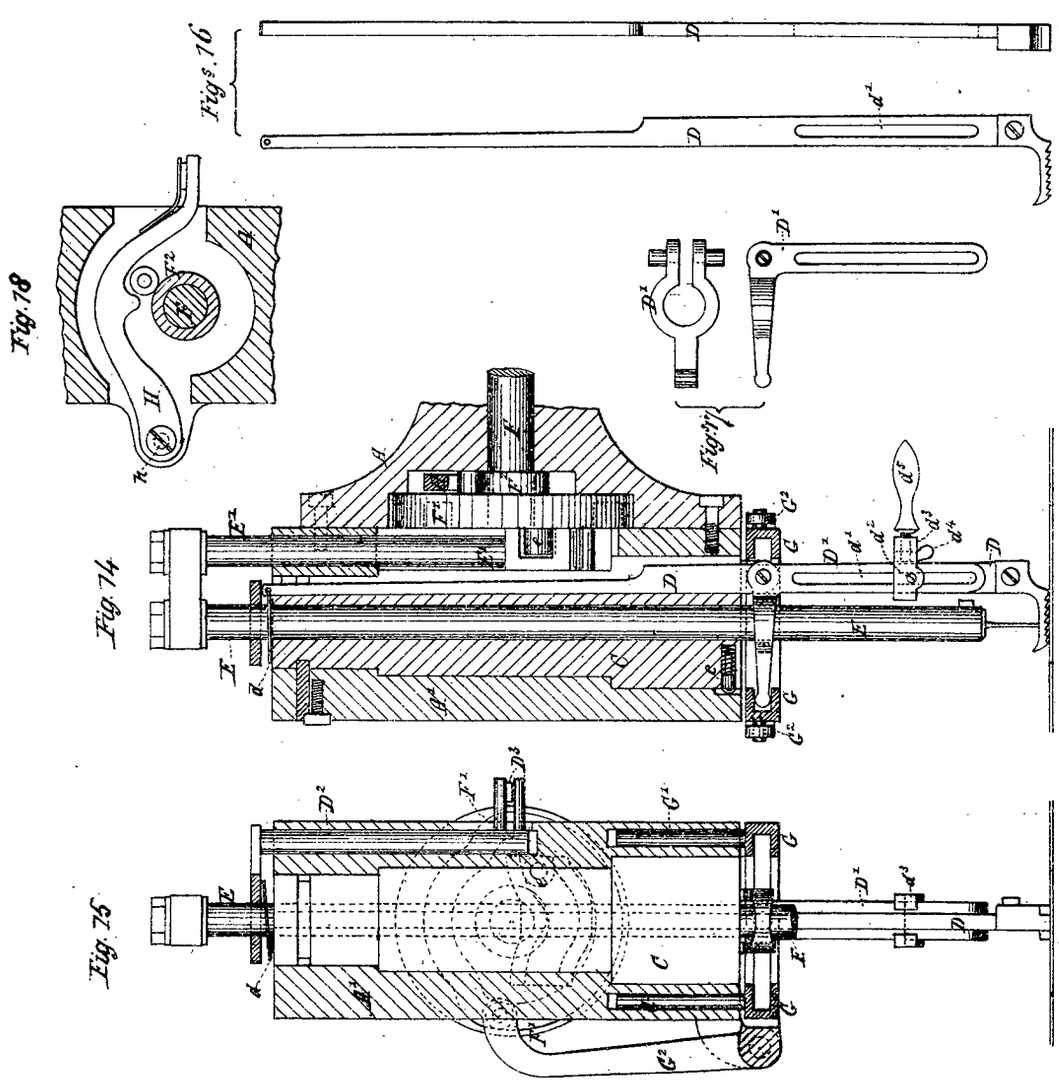

This is the Sheet of Drawings, marked "G" referred to in the annexed Letters of Registration granted to George Augustus Woodcroft Alexander Anderson, Spencer Mort and George Browning this fourth day of March A.D. 1880.

(Sig. 357)

"Augustus Toffits"

PHOTO-LITHOGRAPHED AT THE GOVT. PRINTING OFFICE, SYDNEY, NEW SOUTH WALES.

"H"

[807]

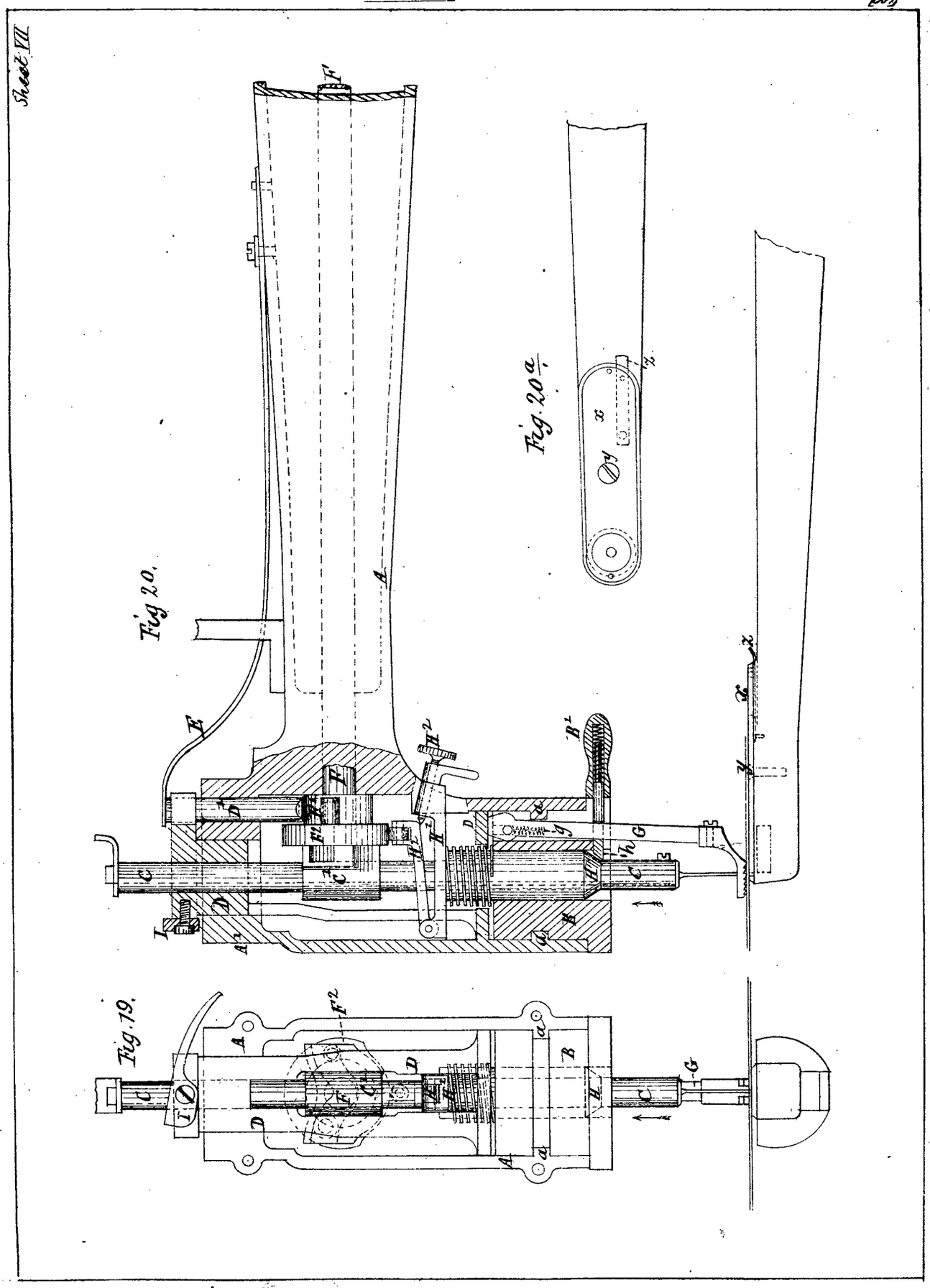

This is the sheet of Drawings marked "H" referred to in the annexed Letters of Registration granted to George Baldwin Woodruff, Alexander Anderson, Spencer Hoel and George Browning this fourth day of March A.D. 1880

(Sig. 357)

PHOTO-LITHOGRAPHED AT THE GOVT. PRINTING OFFICE, SYDNEY, NEW SOUTH WALES.

"Augustus Loftus".

A.D. 1880, 12*th March.* No. 808.

IMPROVEMENTS IN APPARATUS FOR AUTOMATICALLY BINDING CUT CROPS INTO SHEAVES.

LETTERS OF REGISTRATION to William McIntyre Cranston, for Improvements in Apparatus for automatically binding cut crops into sheaves.

[Registered on the 13th day of March, 1880, in pursuance of the Act 16 Vic. No. 24.]

BY HIS EXCELLENCY the Right Honorable SIR AUGUSTUS WILLIAM FREDERICK SPENCER LOFTUS (commonly called LORD AUGUSTUS LOFTUS), Knight Grand Cross of the Most Honorable Order of the Bath, a Member of Her Majesty's Most Honorable Privy Council, Governor and Commander-in-Chief of the Colony of New South Wales and its Dependencies.

TO ALL TO WHOM THESE PRESENTS SHALL COME, greeting:

WHEREAS WILLIAM MCINTYRE CRANSTON, of Worship-street, Finsbury, London, England, hath by his Petition humbly represented to me that he is the author or designer of a certain invention or improvement in manufactures, that is to say, of an invention for "Improvements in Apparatus for automatically binding cut crops into sheaves," which is more particularly described in the specification and the sheet of drawings which are hereunto annexed; and that he, the said Petitioner, hath deposited with the Honorable the Treasurer of the said Colony of New South Wales the sum of Twenty Pounds sterling, for defraying the expense of granting these Letters of Registration, as required by the Act of Council, sixteenth Victoria, number twenty-four; and hath humbly prayed that I would be pleased to grant Letters of Registration, whereby the exclusive enjoyment and advantage of the said invention or improvement might be secured to him for a period of fourteen years: And I, being willing to give encouragement to all inventions and improvements in the arts or manufactures which may be for the public good, and having received a report favourable to the prayer of the said Petition, from competent persons appointed by me to examine and consider the matters stated therein and to report thereon for my information, am pleased, with the advice of the Executive Council, and in exercise of the power and authority given to me by the said Act of Council, to grant, and do by these Letters of Registration grant unto the said William McIntyre Cranston, his executors, administrators, and assigns, the exclusive enjoyment and advantage of the said invention or improvement, for and during the term of fourteen years from the date hereof; to have, hold, and exercise unto the said William McIntyre Cranston, his executors, administrators, and assigns, the exclusive enjoyment and advantage thereof, for and during and unto the full end and term of fourteen years from the date of these presents next and immediately ensuing, and fully to be complete and ended: Provided always, that if the said William McIntyre Cranston shall not, within three days after the granting of these Letters of Registration, register the same in the proper office in the Supreme Court, at Sydney, in the said Colony of New South Wales, then these Letters of Registration, and all advantages whatsoever hereby granted, shall cease and become void.

In witness whereof, I have hereunto set my sign manual, and have caused the present Letters of Registration to be sealed with the seal of the said Colony of New South Wales, at Government House, Sydney, in New South Wales, this twelfth day of March, in the year of our Lord one thousand eight hundred and eighty.

[L.S.] AUGUSTUS LOFTUS.

SPECIFICATION

A.D. 1880. No. 808.

Improvements in Apparatus for automatically binding cut crops into sheaves.

SPECIFICATION of WILLIAM MCINTYRE CRANSTON, of Worship-street, Finsbury, London, England, for Improvements in Apparatus for automatically binding cut crops into sheaves.

ACCORDING to my invention, the apparatus is adapted to be attached to or constructed as a part of any harvester or reaper, which is constructed to receive the grain as it is cut on an apron or other device capable of effecting continuous, or practically continuous, delivery on to a binding platform or table; the apparatus being also applicable to binding straws leaving a threshing machine. It is automatic in its operation, is so organized that the sheaves when bound are practically uniform in bulk or size, requires no special attention from the operator to control or regulate its movements, employs twine or string as a binder, and is equipped with a device for accomplishing the fastening of the band by tying a knot in the string.

The several groups of devices, each of which has its own appropriate function to perform, and which in the aggregate constitute an automatic gear organism for binding loose cut straw or grain into bundles or sheaves, may be summarized as follows:—

1. Special appliances for gathering the cut straw as it is received upon the binding table, and packing the same so as to get a firm solid sheaf, as a condition precedent to wrapping and tying the same with the binding cord or twine.

2. Special mechanism for arresting the operation of the gathering and packing devices last named, and simultaneously bringing into action the devices for passing the binding twine around the sheaf thus accumulated and made ready to be tied, such special mechanism for arresting the gathering and packing and starting the binding operations being dependent upon and governed in its operation by the size or bulk of the compressed unbound sheaf so accumulated.

3. Mechanism for operating the needle-arm, the office of which is to carry one end of the binding cord around the unbound straw into position for it to be seized by the twine-grasping and severing device, and to hold the binding cord during the operation of tying the knot.

4. Special devices for simultaneously seizing and severing the binding twine or cord, and mechanism for operating the same.

5. Apparatus for grasping the two ends of the binding cord between their several points of attachment to the grasping device and the eye of the needle-arm respectively, and the straw which said binding cord encircles, and for tying said two ends into a knot.

6. Devices for elevating the lever or arm by means of which in part the sheaf has been compressed or held during the binding process, so as to clear the path of delivery of the bound sheaf from the machine.

7. Special appliances, together with the means for operating the same, whereby the bound sheaf is expelled from the machine.

8. The group of co-operative devices for tying the knot in the binding cord, and special provisions for operating the same.

9. Special provisions for regulating the supply of the binding cord to the binding apparatus, and for governing the tension of the same in the process of paying out.

The several working parts of the binding apparatus are shown in the annexed drawings, and mounted in or upon a wooden frame, and fall within dimensions of from five and a half to perhaps eight feet in length, from two to three feet in width, and from three to four feet in height. Such frame is attached to the harvester for convenience, so that its length shall be at right angles with and at a convenient elevation above the finger-bar or cutting apparatus. Within this frame A, and arranged parallel with its length, are three principal shafts, B, C, D, which carry the several gears, cams, and other devices by means of which appropriate movements are imparted to the several active members of the machine. Continuous motion is imparted to the main driving shaft B, through a sproket wheel, E, placed at or near one end thereof, from the harvester proper, if fitted to one, by means of a chain. Upon the same shaft B, at some suitable point in its length, is placed a small spur gear, F, one side of which engages with a clutch gear upon the shaft C, which drives the rotary devices, G G, for gathering and compressing the straw, preparatory to binding, which devices may be designated as rotary gathering and packing fingers; and the opposite side thereof engages with and rotates another clutch gear upon the shaft D, carrying the several cams, gears, segmental gears, cranks, and other devices for operating various other parts of the apparatus.

The several groups of devices hereinbefore numerically referred to in serial order, commencing with the provisions for receiving, collecting, and compacting the straw upon the binding platform, preparatory to the manipulations thereupon subsequently to be performed, are here referred to. For the purpose stated, a sliding clutch, H, is provided upon the shaft which rotates the packing fingers *a a*, which clutch is fitted to engage with and with the shaft upon which it slides be driven by the clutch gear or gear clutch first above described. Upon the same shaft C are attached so as to rotate with it two discs, G G, at suitable distances apart, each of which discs carries a series of gathering and compressing fingers, *a a* (see figs. 2 and 3); such discs are placed so that such packing fingers will act upon the straw about midway of its length, and immediately opposite or in rear of the compressing arm, against which, when in operation, it forces and compacts the loose grain or straw under the direction of the fixed cam A'. The gathering and compressing fingers *a a* are each pivoted to the discs G G, and have a feathering movement similar to the paddles of a feathered wheel of a vessel, so arranged that they maintain a radial position with respect to their axis of revolution only while in the act of gathering in and compacting the straw which is to form the sheaf; they also perform the additional function of suspending their own action and bringing into service the mechanism which takes the straw at this point, binds it, and delivers the sheaf from the machine, which office is accomplished by reason of the compressor arm J being crowded back against a tripping lever, on account of the excessive accumulation of straw between the packing fingers and the compressing arm or lever, which backward movement of the compressor J (figs. 4 and 5) through the immediate connecting mechanism, effects the shipping of the sliding clutch, so as to throw the packing fingers out of action, and at the same time and by same means throw the sliding clutch upon the cam shaft into engagement with the second gear clutch first above described, and thus bring into play consecutively the several devices for binding and delivering the sheaf.

Upon the end of the cam shaft D is a crank, K, the wrist pin of which works in a slot of a vibrating lever, L, one end of which lever is pivoted to some convenient part of the frame of the machine, and the opposite

opposite end is attached to a rod, M, which is connected at its other end to a crank, N, upon one end of the rock shaft P, which carries the reciprocating needle-arm Q. Through these appliances the appropriate motions are imparted to the needle-arm for carrying the binding cord into position (see fig. 4) to be seized by the grasper *b* and by the knotting or tying devices. The needle-arm is made somewhat in the form of a sickle, and has an eye near its point through which the binding cord R runs while the apparatus is at work.

The device for severing the binding cord and at same stroke seizing and holding one of the ends of the cord after such bisection, consists of a tool similar in form to a hook-headed spike, *c* (see fig. 6 and 7), but having that portion answering to the top of the head of the spike bevelled, so as to present an inclined plane or surface to the binding cord; the shank of this grasping tool works or slides in a socket, *d*, and has motion imparted to it from its rear end, *e*. The under side of the hooked-headed projection is roughened or corrugated, and when in action may be drawn up against a similarly corrugated shoulder or abutment, and the binding cord is firmly held by being confined between the two roughened surfaces. The hook-headed portion of this tool works between two cheeks, one of which consists of a chisel-shaped cutting edge, *f*, for severing the cord, and the other acts similarly to one jaw of a gripe (the hook-head of the tool acting as the other), between which the binding cord is jammed or confined, when the needle-arm retreats from its position after the binding of a sheaf.

The cord-grasping and severing device last described is located above and a little in front of the sheaf, and alongside the path of the needle-arm Q, when it brings the binding cord R into position to be acted upon; close by, but just in rear of this and directly over the sheaf, is placed the tying device, shown in figs. 6 and 7, and in detail in figs. 8, 9, 10, 11, 12, 13, 14, consisting of a hollow vertical shaft, S, with pinion, T, at top, through which it receives its motion, and at bottom it carries a sickle-shaped arm, U, provided at its extremity with a barb-shaped hook. This sickle arm works in conjunction with a correspondingly curved arm, V, situated immediately beneath and in contact with it, and attached to the lower end of the shaft W, which revolves within the hollow shaft S, above mentioned. The hollow shaft has a rotary reciprocating movement under the action of a toothed quadrant, X, segmental cam gear, B^1, and lever, C^1; such movement performs the several offices of first catching both ends of the binding cord, as in fig. 8, and in process of partial revolution making a loop in such double cord around the two sickle-shaped arms, as in fig. 10, and then by hooking on to the double cord again, as in fig. 11, and retreating, draws said last-named double cord, or the ends thereof, through the aforementioned loop, as in figs. 12, 13, and 14, thus forming a knot and securely binding the sheaf. The loop above referred to, through which the ends of the cord are drawn, is manipulated in part by a disengaging hook, Y, which prevents its withdrawal from position where the ends of the cord may be drawn through it, and also assists to draw the loop off the sickle arms wherein it was formed.

After the sheaf has been bound it becomes necessary to elevate the compressing lever J (as in fig. 5), for the purpose of leaving an unobstructed way for the delivery of the sheaf from the binding platform Z (fig. 4). This is done substantially as follows:—The upper end of the compressing lever J is pivoted to the free end of a lever, *g*, of the third class, having its fulcrum on the frame *h*, at the back side of the machine. Beneath this lever is placed another lever, *i*, of the third class, pivoted at the fulcrum end, *j*, on the front side of the machine frame, directly opposite the first-named fulcrum. The free end of the bottom lever is connected by a stirrup or coupling, *k*, to the upper lever, at a point nearest the fulcrum end thereof. At a point over the cam shaft D, motion is imparted to the bottom lever from a cam on said shaft, by which means, through the agency of the upper lever, the compressing lever J may be elevated sufficiently to permit the sheaf to be successfully delivered clear from the machine.

The pathway for the delivery of the bound sheaf having been cleared, the next step to be accomplished is the expulsion of the same from the machine. To do this I have provided a rock shaft, *l*, underneath the binding table Z, which is actuated intermittently by means of cranks, *m*, and pitman or connecting rod, *n*, connections dependent in their operation upon the rotation of a segmental gear, *p*, on the cam shaft D, which in turn engages with and drives the segmental pinion gear *q* upon the crank shaft to which the pitman *n* is attached. Such rock shaft is armed at its inner extremity with a crescent-shaped arm, *r*, which plays up through the slot in the binding platform, and when brought into action quickly is directed against the bundle and expels the same from the binding platform.

The binding cord or twine is stored in a suitable case, S, in balls, as the same come from the twine factory. Thence the cord is conducted through suitable guides to the device by which the tension is regulated and through which it passes. This device consists of a flat steel spring, provided at its back with an adjusting set screw, by means of which said spring may be put in adjustment with reference to the surface of the plate, between which and the spring the binding cord passes from the twine-box to the needle-arm. In connection with the said tension spring is provided a device for setting the spring up tightly against the cord as it passes through, and thus arrests its further progress. This becomes necessary while the knot-tying devices are in operation, for the purpose of keeping the cord taut so that the knot may be tightly drawn up. Such device consists of a rock shaft, *t*, placed beneath the binding platform, having one end thereof cranked to work against the under or back side of the tension spring, and the other end thereof similarly cranked for the attachment of a pitman or connecting rod, *u*, one end of which works against a cam on the cam shaft.

All the movements of the several devices above enumerated, exclusive of the main driving shaft and its rigidly fastened attachments, being either intermittent or reciprocatory in character, a variety of subordinate special devices are provided for establishing appropriate interdependent relations, connections and movements there between, the construction, attachment, and mode of operation of which may be varied without in any sense departing from the essential principles or plan of operation of the invention.

I claim the details set forth in the introductory part of this specification, composed of—

First—The combination of the several appliances or devices as a binding apparatus, attached to a reaping-machine, and acting in the manner described for the purposes set forth.

Secondly—The employment of suspended fingers on rotating discs of straw-binding machines, acting and arranged substantially as shown in the annexed drawings for the purposes described.

Thirdly—

Improvements in Apparatus for automatically binding cut crops into sheaves.

Thirdly—The compressor arm J, with the finger gathering mechanism and levers in combination for arresting the motion of the finger discs, and simultaneously and automatically throwing the binding devices into action by the pressure of the sheaf against the arm, substantially as described and shown in the annexed drawings.

Fourthly—The grasper tool for holding the cord while the tying of the knot is effected, and for retaining a firm hold of the cord until the next collection of straws is surrounded by the cord for the next binding and tying, the tool being in combination with a cutter or knife, as set forth and shown in the drawings.

Fifthly—The particular arrangements of twisting, looping, and tying mechanism shown in the annexed drawings, and acting in the manner described.

Sixthly—I claim specially the employment of an arm, J, against which collected straws press to form a sheaf, said arm by this pressure, and a movement resulting therefrom, causing a binder-head to come into action to carry the string around a sheaf when the desired quantity of straws has accumulated, whether the arm be fitted to the binder apparatus shown in the drawings or to any other binder as set forth.

Seventhly—I claim the bound sheaf-expelling arm *r*, operated by a circular reciprocating motion shaft as described, this being applicable to other binders than that shown in the drawings.

Eighthly—The appliances for regulating the supply of binding cord to the binding apparatus, and for governing the tension of the same in the process of paying out as described

In witness whereof I, the said William McIntyre Cranston, have hereunto set my hand and seal, this nineteenth day of December, in the year of our Lord one thousand eight hundred and seventy-nine.

WM. M. CRANSTON,
By his Attorneys, WANT, JOHNSON, & WANT.

This is the specification referred to in the annexed Letters of Registration granted to William McIntyre Cranston, this twelfth day of March, A.D. 1880.

AUGUSTUS LOFTUS

REPORT.

Sir, Sydney, 5 February, 1880.

We do ourselves the honor to state that we see no objection to the issue of Letters of Registration in favour of Mr. William McIntyre Cranston, for an invention for "Improvements in Apparatus for automatically binding cut crops into sheaves," in accordance with the specification, Petition, drawings, and claim, transmitted for our report, under you blank cover communication of the — instant, No. 1,052.

We have, &c.,
GOTHER K. MANN,
ROBERT GEO. MASSIE.

The Principal Under Secretary.

[Drawings—one sheet.]

Fig. 1.

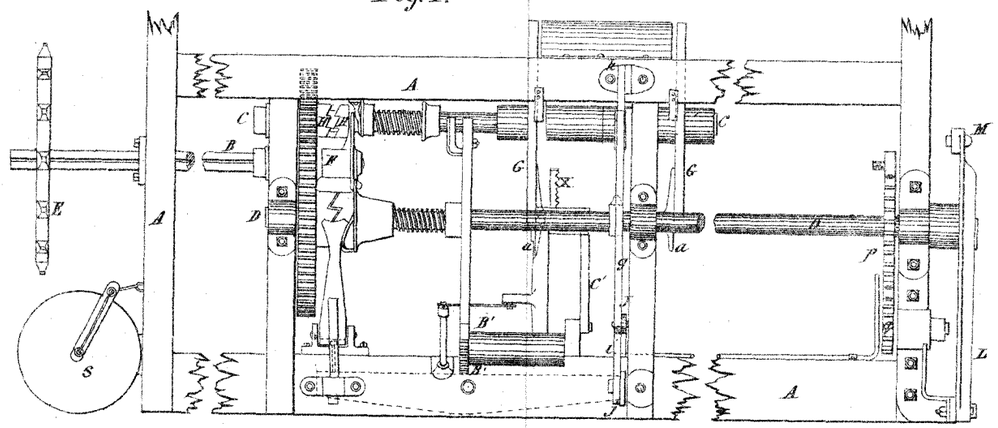

Fig. 3.

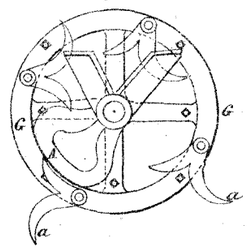

Fig. 2.

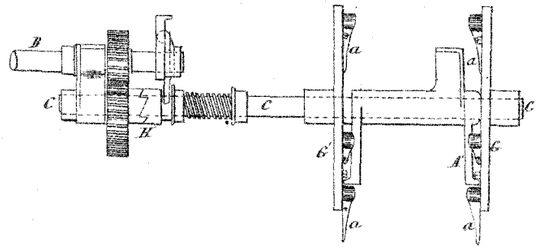

Fig. 4.

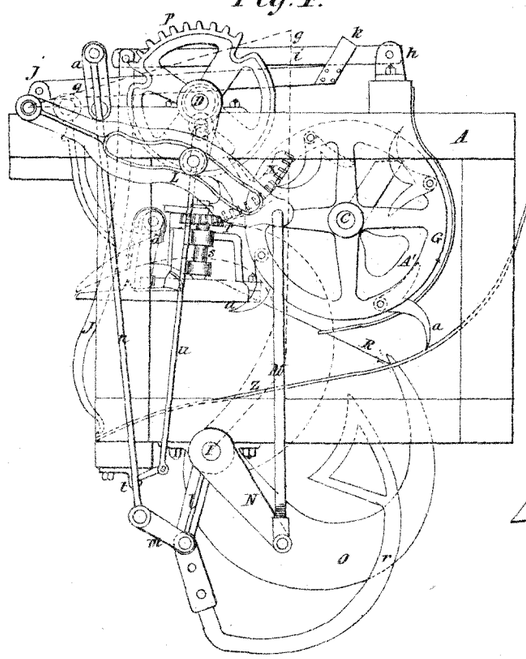

Fig. 5.

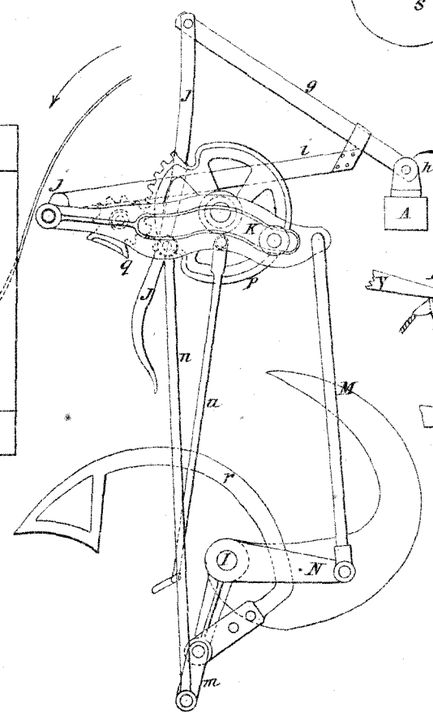

Fig. 13.

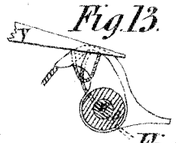

Fig. 14.

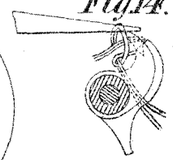

Fig. 6.

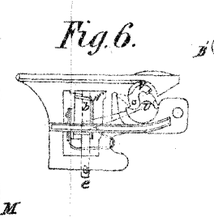

Fig. 7.

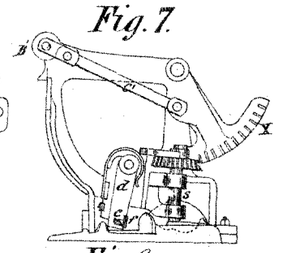

Fig. 8.

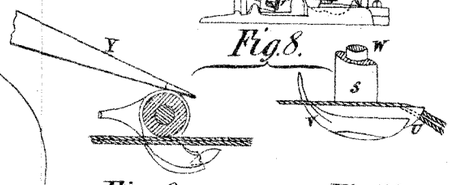

Fig. 9.

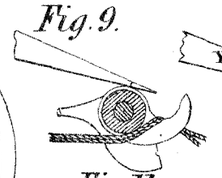

Fig. 10.



Fig. 11.



Fig. 12.

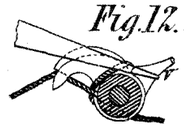

This is the Sheet of Drawings referred to in the annexed Letters of Registration granted to William Mc Intyre Cranston, this twelfth day of March, A.D 1880.

Augustus Loftus

PHOTO-LITHOGRAPHED AT THE GOVT. PRINTING OFFICE, SYDNEY, NEW SOUTH WALES

A.D. 1880, 11*th March*. No. 809.

BARTON & HARDIE'S IMPROVED HYDRAULIC CEMENT.

LETTERS OF REGISTRATION to Russell Barton and George Hardie, for an Improvement in the manufacture of Hydraulic Cement.

[Registered on the 13th day of March, 1880, in pursuance of the Act 16 Vic. No. 24.]

BY HIS EXCELLENCY the Right Honorable SIR AUGUSTUS WILLIAM FREDERICK SPENCER LOFTUS (commonly called LORD AUGUSTUS LOFTUS), Knight Grand Cross of the Most Honorable Order of the Bath, a Member of Her Majesty's Most Honorable Privy Council, Governor and Commander-in-Chief of the Colony of New South Wales and its Dependencies.

TO ALL TO WHOM THESE PRESENTS SHALL COME, greeting:

WHEREAS RUSSELL BARTON, of Sydney, in the Colony of New South Wales, grazier, and GEORGE HARDIE, of Sydney aforesaid, mining agent and auctioneer, have by their Petition humbly represented to me that they are the authors or designers of a certain invention or improvement in manufactures, that is to say, of an invention of an "Improvement in the manufacture of Hydraulic Cement," which is more particularly described in the specification which is hereunto annexed; and that they, the said Petitioners, have deposited with the Honorable the Treasurer of the said Colony of New South Wales the sum of Twenty Pounds sterling, for defraying the expense of granting these Letters of Registration, as required by the Act of Council, sixteenth Victoria, number twenty-four; and have humbly prayed that I would be pleased to grant Letters of Registration, whereby the exclusive enjoyment and advantage of the said invention or improvement might be secured to them for a period of fourteen years: And I, being willing to give encouragement to all inventions and improvements in the arts or manufactures which may be for the public good, and having received a report favourable to the prayer of the said Petition, from competent persons appointed by me to examine and consider the matters stated therein and to report thereon for my information, am pleased, with the advice of the Executive Council, and in exercise of the power and authority given to me by the said Act of Council, to grant, and do, by these Letters of Registration, grant unto the said Russell Barton and George Hardie, their executors, administrators, and assigns, the exclusive enjoyment and advantage of the said invention or improvement, for and during the term of fourteen years from the date hereof; to have, hold, and exercise unto the said Russell Barton and George Hardie, their executors, administrators, and assigns, the exclusive enjoyment and advantage thereof, for and during and unto the full end and term of fourteen years from the date of these presents next and immediately ensuing, and fully to be complete and ended: Provided always, that if the said Russell Barton and George Hardie shall not, within three days after the granting of these Letters of Registration, register the same in the proper office in the Supreme Court, at Sydney, in the said Colony of New South Wales, then these Letters of Registration, and all advantages whatsoever hereby granted, shall cease and become void.

In witness whereof, I have hereunto set my sign manual, and have caused the present Letters of Registration to be sealed with the seal of the said Colony of New South Wales, at Government House, Sydney, in New South Wales, this eleventh day of March, in the year of our Lord one thousand eight hundred and eighty.

[L.S.] AUGUSTUS LOFTUS.

A.D. 1880. No. 809.

Barton & Hardie's improved Hydraulic Cement.

TO ALL TO WHOM THESE PRESENTS SHALL COME: We, RUSSELL BARTON, of Sydney, in the Colony of New South Wales, grazier, and GEORGE HARDIE, also of Sydney, in the same Colony, mining agent and auctioneer, send greeting:

WHEREAS we are desirous to obtain Letters of Registration for securing unto us Her Majesty's special license that we, our executors, administrators, and assigns, and such others as we or they shall at any time agree with, and no others, shall and lawfully may from time to time and at all times during the term of fourteen years to be computed from the day on which this instrument is left at the office of the Colonial Secretary, Sydney, make and exercise, use and vend within the Colony of New South Wales, an invention of or an improvement in the manner of manufacturing hydraulic cement, to be called "Barton and Hardie's Improved Hydraulic Cement," as more particularly described and shown in the following specification and description, that is to say:—

SPECIFICATION of an Improvement in manufacture of Hydraulic Cement.

This invention or improvement consists in the use of peculiar kinds of shale, viz., Wianamatta shale, and all other shales of sedimentary origin found in New South Wales, for the manufacture of hydraulic cement.

This shale, which consists almosts entirely of silica, alumina, and iron in the state of protoxide, is ground to a fine powder, either dry or with water. Being a sedimentary deposit, and having been in a uniform and very fine state of division, it is easily brought to a proper condition for the production of hydraulic cement.

During the pounding of the shale, or at any other suitable period, it is intimately mixed with lime in an equally fine mechanical state. The lime may be used either as unslaked lime, as hydrate of lime, or as carbonate of lime, according to whether water is used during the grinding and mixing or subsequently.

The proportion of lime to shale is about three parts of the former to two parts of the latter; but these proportions must be regulated by the character of the cement required; and if carbonate or hydrate is used, due allowance must be made for the loss which they would sustain at a red heat.

The mixture of shale and lime is then dried in suitably sized pieces, and afterwards burnt in a kiln, and ground in the ordinary manner.

We claim that the manufacture of hydraulic cement from shale herein substantially as described is a novelty and an improvement in the formation of hydraulic cement.

Dated at Sydney, this twenty-seventh day of January, in the year of our Lord one thousand eight hundred and eighty.

RUSSELL BARTON.
GEORGE HARDIE,
(By HENRY HALLORAN).

Agency, 1, Bridge-street Chambers,
27 January, 1880.

This is the specification referred to in the annexed Letters of Registration granted to Russell Barton and George Hardie, this eleventh day of March, A.D. 1880.

AUGUSTUS LOFTUS.

REPORT.

Sydney, 6 February, 1880.

Sir,

The application of Messrs. Russell Barton and George Hardie for Letters of Registration for an "Improvement in the manufacture of Hydraulic Cement" having been referred to us, we have examined the specification accompanying the same, and have now the honor to report that we see no objection to granting the prayer of the Petition.

We have, &c.,
J. SMITH.
JAMES BARNET.

The Principal Under Secretary.

A.D. 1880, 15*th March*. No. 810.

IMPROVEMENT IN RAILWAY SYSTEMS.

LETTERS OF REGISTRATION to Peter Hevner, for an Improvement in Railway Systems.

[Registered on the 15th day of March, 1880, in pursuance of the Act 16 Vic. No. 24.]

BY His Excellency the Right Honorable Sir Augustus William Frederick Spencer Loftus (commonly called Lord Augustus Loftus), Knight Grand Cross of the Most Honorable Order of the Bath, a Member of Her Majesty's Most Honorable Privy Council, Governor and Commander-in-Chief of the Colony of New South Wales and its Dependencies.

TO ALL TO WHOM THESE PRESENTS SHALL COME, greeting:

WHEREAS Peter Hevner, of Philadelphia, in the State of Pennsylvania, United States of America, hath by his Petition humbly represented to me that he is the author or designer of a certain invention or improvement in manufactures, that is to say, of an invention of "Improvements in Railway Systems," which is more particularly described in the specification, marked A, and the three sheets of drawings, marked B, C, and D respectively, which are hereunto annexed; and that he, the said Petitioner, hath deposited with the Honorable the Treasurer of the said Colony of New South Wales the sum of Twenty Pounds sterling, for defraying the expense of granting these Letters of Registration, as required by the Act of Council, sixteenth Victoria, number twenty-four; and hath humbly prayed that I would be pleased to grant Letters of Registration, whereby the exclusive enjoyment and advantage of the said invention or improvement might be secured to him for a period of fourteen years: And I, being willing to give encouragement to all inventions and improvements in the arts or manufactures which may be for the public good, and having received a report favourable to the prayer of the said Petition, from competent persons appointed by me to examine and consider the matters stated therein and to report thereon for my information, am pleased, with the advice of the Executive Council, and in exercise of the power and authority given to me by the said Act of Council, to grant, and do by these Letters of Registration grant unto the said Peter Hevner, his executors, administrators, and assigns, the exclusive enjoyment and advantage of the said invention or improvement, for and during the term of fourteen years from the date hereof; to have, hold, and exercise unto the said Peter Hevner, his executors, administrators, and assigns, the exclusive enjoyment and advantage thereof, for and during and unto the full end and term of fourteen years from the date of these presents next and immediately ensuing, and fully to be complete and ended: Provided always, that if the said Peter Hevner shall not, within three days after the granting of these Letters of Registration, register the same in the proper office in the Supreme Court, at Sydney, in the said Colony of New South Wales, then these Letters of Registration, and all advantages whatsoever hereby granted, shall cease and become void.

In witness whereof, I have hereunto set my sign manual, and have caused the present Letters of Registration to be sealed with the seal of the said Colony of New South Wales, at Government House, Sydney, in New South Wales, this fifteenth day of March, in the year of our Lord one thousand eight hundred and eighty.

[L.S.] AUGUSTUS LOFTUS.

Improvement in Railway Systems.

A.

SPECIFICATION.

BE it known that I, PETER HEVNER, of Philadelphia, Pennsylvania, United States of America, have invented a new and useful Improvement in Railway Systems, of which the following is a specification:—

THE main object of my invention is to combine two continuous rods or rails, or two continuous lines of rods or rails with couplings to connect them together, forming a double elevated track, with a series of endless traction-ropes so arranged that hangers or carriages, to which the loads are suspended, may be caused by the said endless ropes to traverse the track continuously.

Further objects of my invention will appear hereinafter. It may be stated here, that the main advantages of my improved railroad system, are its economy in construction and its applicability to localities where ordinary railways could not be built without great difficulty and expense, as for instance, in mountainous mining regions, where minerals have heretofore been transported on the backs of mules, or on waggons, &c. In the accompanying drawing, fig. 1, sheet 1, is a perspective view, illustrating part of one of the elevated rails, part of the traction-rope, and the hanger to which the load is suspended. Fig. 2, a diagram representing a plan or top view of the track, and illustrating the relative positions of the driving and tightening stations. Fig. 3, another diagram illustrating my invention. Fig. 4, sheet 2, shows the manner of constructing the railway where an abrupt turn of the track takes place. Fig. 5, a perspective view of one of the driving stations; and fig. 6, sheet 3, a perspective view of one of the tightening stations.

The track consists of two parallel rods, A A, or rather of a series of rods connected together, and this track is elevated, being carried by posts driven into the ground, as shown in fig. 5, or by such frames and other appliances as the character of the country which the road has to traverse may suggest. The loads are carried by these rods through the medium of hangers, A^1, one of which with part of one of the rods A, is illustrated in fig. 1, sheet 1. A pulley, *a*, having a groove adopted to the rod, running loosely upon a pin, *b*, projecting from the upper end of the hanger, which has a gripping device described hereinafter, for seizing the traction-rope H, so that the movement of the latter shall be followed by that of the hanger on the rod.

The arrangement of traction-ropes will be best understood by reference to the general plan view, fig. 2.

Throughout the entire elevated railway there are driving stations, D, situated preferably about 5 miles apart, and tightening stations, B, situated between the driving stations; in other words, the tightening stations and driving stations alternate.

Immediately below the rods which compose the elevated rails of the track are the traction-ropes, or rather series of endless traction-ropes, which are disposed of in the following manner, reference being had to the diagram, fig. 2. It will be noticed that at each tightening station B there are two horizontal pulleys, G G^1, and at each driving station two similar pulleys, E E^1; the former are on vertical shafts, each carried by a separate adjustable frame, and the frame is so controlled by weights or otherwise that the pulleys have a tendency to move away from each other, as more fully explained hereinafter.

The shafts *e e* of the pulleys E E^1 of each driving-station are adapted to fixed bearings, and are driven by a stationary engine or other motor; or the shafts may be fixed, and the pulleys driven through the medium of any suitable system of gearing.

The endless traction-rope H passes around the pulley G at the tightening station B, and around the pulley E^1 at the driving station D. Another endless traction-rope, H^1, passes around the pulley E at the station D, and around a pulley on the next driving station which occurs in the direction of the arrow 1, fig. 2, and a third endless rope H^2, after passing around the pulley G^1 at the tightening station B, passes around a pulley, G^2, at the next driving station, in the direction of the arrow 2; the rope in this instance being guided by pulleys, so as to follow the track above, which takes an abrupt turn at 1 in a manner hereinafter fully described. The diagram, fig. 3, will perhaps serve better to illustrate this succession of endless traction-ropes. In this diagram the quadrangular figures in plain lines represent the tightening stations, and the quadrangular figures in dotted lines, the driving stations, and the dark circular spots are the vertical shafts without their pulleys; and the endless ropes are shown, one by dotted lines, the next by plain lines, the next by dotted lines, and so on, it being understood that the stations shown in this figure, as well as in fig. 2, are about $2\frac{1}{2}$ miles apart, the distance between the driving stations being about 5 miles, and the distance between the tightening stations the same. These are distances which I have assumed in the present instance, and may be departed from. On turning the pulleys at one of the driving stations, two endless ropes will be driven, and on moving the pulleys G G^1 of one of the tightening stations two endless ropes will be tightened. When the pulleys of all the driving stations are driven, there will be two continuous lines of traction-ropes traversing in contrary directions, the two lines of rope being immediately below, and pursuing precisely the same course as the rods. The ropes are suspended to the rails through the medium of the hangers referred to above, so that when the railroad is in operation, one series of loads suspended from one system of rods is traversing in one direction and another series of loads suspended by the hangers from the other system of rods is traversing in the other direction.

While there are two continuous lines of traction-rope extending from end to end of the railway, and formed by the series of endless ropes, there are two ropes traversing on each line where the driving pulleys or tightening pulleys occur. Thus, where the driving pulleys G G^1 occur at the driving station D in fig. 2, two ropes are traversing together between the points *x x* on one side, and two between the points x^1 x^1 on the opposite side (see figs. 5 and 6), and it is these double ropes at these points which insure the continuity of the two lines; but each hanger as it passes between the points *x x* or x^1 x^1 must be released from one endless rope and attached to the other endless rope, for which purpose there may be one or more attendants at every station to make the necessary transfers as fast as the hangers with their loads arrive, or there may be any automatic appliance such as latches attached to the hanger which shall effect the transfer by being unlatched by means of an inclined surface set for the purpose. Fig. 5, sheet 2, shows one of the driving stations in perspective, E E^1 being the two driving pulleys, H H, a portion of one endless traction-

traction-rope passing around the pulley E, the course of another endless rope, H^1 H^1, being indicated by the dotted lines. A A are the rods which constitute the track, and which are supported by the posts J and their cross-bars. A frame, J^1, for carrying the bracing of the two vertical shafts, is built on a suitable foundation. This frame, as shown in the drawing, is of the simplest character, the necessary braces, &c., being omitted to prevent confusion. For the same reason the engines and gearing by which the shafts are driven have been omitted. Indeed, many different systems of driving appliances may be used. Whatever style of frame is used at each driving station, it must be such as to permit the hangers and the loads to pass freely through it. The appliances used at each tightening station are illustrated in the perspective view, fig. 6, sheet 3. Each of the tightening pulleys G G^1 is carried by a frame, each frame being composed in the present instance of a bottom-plate, *h*, a cross-bar, *i*, and two vertical bars, *j j*, for connecting the said bottom-plate and cross-bar together; and from the vertical bars project brackets, *k*, carrying the wheels.

The bottom plate has wheels adapted to rails *m m*, secured to a suitable foundation, and the cross-bar has wheels adapted to rails *n n*, supported by posts K K, which are to be suitably steadied by an appropriate system of bracing (not shown in the drawing), for the reasons above given. A rope, *p*, attached to the cross-bar of one frame, passes over a pulley near the top of the post M, and another rope, *p*, attached to the bottom-plate *h*, is guided by a pulley, *q*, passing upward and over a pulley in the same post M. On pulling at the two ropes simultaneously, the movable frame with its pulley E^1 will be moved in the direction of the arrow, and the endless traction-rope H^2 will be tightened. The pulley E may be moved in a contrary direction by similar appliances, in which case the endless traction-rope H H^1 will be tightened; any suitable tackle may be used for hauling the ropes, or weights may be suspended to the same, so as to insure constant tension on the traction-ropes, and so that the movable frames will accommodate themselves to the expansion and contraction of the said ropes.

It will be understood that the posts M are to be properly braced, and that different styles of framework may be substituted for these posts, and indeed for the permanent structure generally, a skeleton or outline frame being purposely shown in the present instance, to prevent confusion in illustrating the more important parts.

It is between the points *x x* in this fig 6, where two traction-ropes traverse together, and where each passing hanger has to be detached from one rope and gripped to the other.

Fig. 4, sheet 2, illustrates the structure where a curve occurs in the suspended track; rigid rails, *u u*, properly bent, are substituted for, and form continuations of the elevated rods where the curve occurs, and are connected together by a framework, *t*. Another frame, composed in the present instance of posts *s s* and angular cross-piece s^1, straddles the track at the curve; and in the framework *t*, and said cross-piece s^1 the vertical shafts *w* w^1 have their bearings, additional bearings being secured to a suitable foundation. To the shaft *w* is secured a guide pulley, *x*, and to the shaft w^1 a guide pulley, x^1, and these two pulleys are of such a diameter and are so located that the traction-ropes which run on the said pulleys will follow the same curve as the track formed by the rigid bent rails *u u*.

The elevated rails A A^1 consist, as before remarked, of a series of rods, the latter being as long as the distance of the posts apart from each other.

A device for so connecting these rods together that proper tension may be imparted to them is shown in fig. 7, sheet 1. Two arms, 1, 2, rest on the cross-bars of the posts, and the two arms are connected together by a bolt, 3; one rod A is bent into a recess in the head 4 of the arm 1, and the other rod into a recess in the end 5 of the arm 2. This end 5 of the arm 2 is slotted, so as to present two ribs 6, 6, between which the portion 4 of the arm 1 with the bent portion of the rod A fits. When the two arms are secured together, the ribs 6, 6 form a bridge between the gap which exists between the bent ends of the two rods, and the pulleys of the hangers ride freely over this bridge.

The rods may be tightened by simply manipulating the nut of the bolt 3, and thereby moving the arms toward each other.

The guide rod 7 passes through eyes in the arms, and this guide rod may be secured to the cross-bars of the posts by eye-bolts or screws, 8.

The rods are secured through the medium of appropriate appliances, by which they can be maintained in a proper state of tension, and yet not interrupt the continuity of the bearing for the pulleys or of the hangers. Different devices may be employed for this purpose, and hence it has not been deemed necessary to illustrate any mechanism for connecting the rods to the cross-bars of the posts. Turning back to the hanger B (shown in fig. 1), it will be observed that the upper portion extends over the pulley and down in front of the same far enough to receive the spindle *b* of the said pulley, and to a projecting portion of this spindle is loosely hung a pendulous arm, *f*, the lower end of which fits freely in a groove in a projection, f^1, on the hanger. When the latter is traversing the rod between the supporting posts, this arm tends to strenghten the upper overhanging portion of the hanger; but when it reaches the connecting devices shown in fig. 7, where the ends of the rods A are secured, the pendulous arm will yield to the obstruction presented at this point, after passing which it will by its own gravity return to its former position (shown in the drawing) and resume its strengthening duty.

The device for gripping the traction-rope to the hanger consists in the present instance of a plate, *g*, fig. 1, pivoted to the said hanger, which has a recess for receiving the rope.

When the plate is moved in the direction of the arrow, it will jam the rope into the recess, the upper bevelled edge of the plate fitting tightly into an undercut shoulder, t^1, on the hanger. When the latter has to be released from the rope in making the transfer above alluded to, all that is necessary is to move the plate in a direction contrary to that pointed out by the arrow, when the hanger will be free, and can be secured to the other rope which traverses alongside of the first where the stations occur. Other devices equally as effective as that just described may be used for gripping the rope to and releasing it from the hanger. Two hangers may be connected together; indeed, I prefer to let them travel in pairs, the connection of one hanger to another being by rods (indicated by dotted lines in fig. 1.) It may be stated here, that the track may have any inclination which the nature of the region may suggest. It may be extended over mountains, or across rivers and ravines, the inclines presenting no impediment to the progress of the traversing hangers. Hence the railway is especially applicable to mountainous districts and mining regions.

It

Improvement in Railway Systems.

It will be understood, however, that when the track has to cross rivers, &c., a proper system of supporting guides or trusses must be substituted for the posts.

I claim as my invention—

1. In an elevated railway, the combination of two continuous rods or rails, forming a double elevated track, with a series of endless traction-ropes, so arranged that the travelling hangers or carriages may traverse the said track continuously, as herein described.
2. A railway in which two continuous lines of elevated rods or rails, and a series of endless traction-ropes below the rods are combined with driving stations arranged at intervals throughout the track, each station having two driving pulleys, E E^1, to which the said endless traction-ropes are applied, substantially in the manner described.
3. An elevated railway in which two lines of elevated rods and a series of endless traction-ropes are combined with alternating driving and tightening stations, the former having driving pulleys, and the latter having tightening pulleys, with devices by which the said tightening pulleys may be controlled, all substantially as set forth.
4. The within-described tightening device, consisting of two pulleys, G G^1, each carried by an adjustable frame controlled by ropes or chains, substantially as set forth.
5. The within-described sliding appliance as illustrated in fig. 7, sheet 1, for connecting the rails or rods.

PETER HEVNER,
(By his Attorney) J. B. CARTER.

This is the specification, marked A, referred to in the annexed Letters of Registration granted to Peter Hevner, this fifteenth day of March, A.D. 1880.

AUGUSTUS LOFTUS.

REPORT.

Sir, Sydney, 13 February, 1880.

In the matter of the application of Mr. Peter Hevner, by his Attorney, Mr. J. B. Carter, for Letters of Registration for an invention of an "Improvement in Railway Systems," which has been referred to us, we have the honor to report that, having examined the specification and drawings accompanying the same, we see no objection to the issue of Letters of Registration as prayed for.

We have, &c.,
JOHN WHITTON.
WILLIAM C. BENNETT.

The Principal Under Secretary.

[Drawings—three sheets.]

Sheet. 1.

Fig. 2.

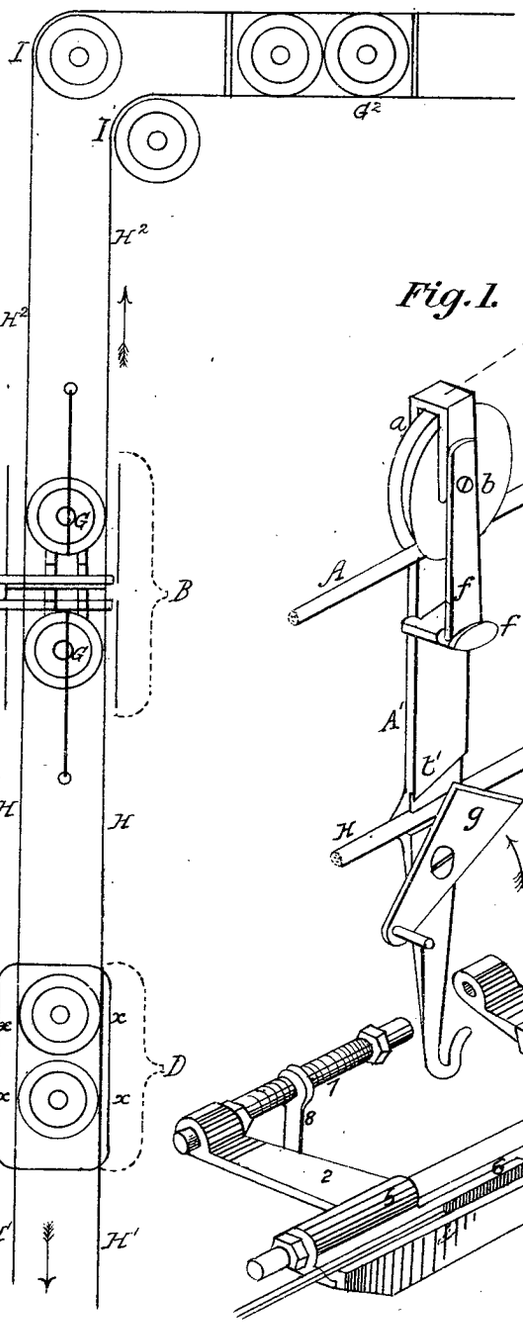

Fig. 3.

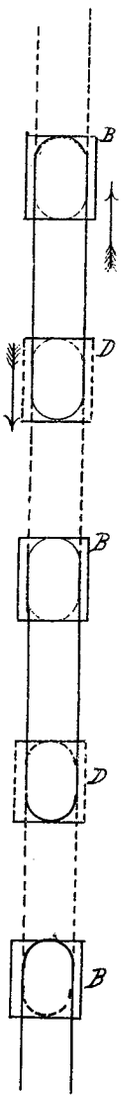

Fig. 1.

Fig. 7.

Peter Hevner.
Inventor.
by his attorney,
J.B. Carter.

This is the Sheet of Drawings marked B referred to in the annexed Letters of Registration, granted to Peter Hevner, this fifteenth day of March, A.D. 1880.

Augustus Loftus.

Sheet. 2

Fig. 4.

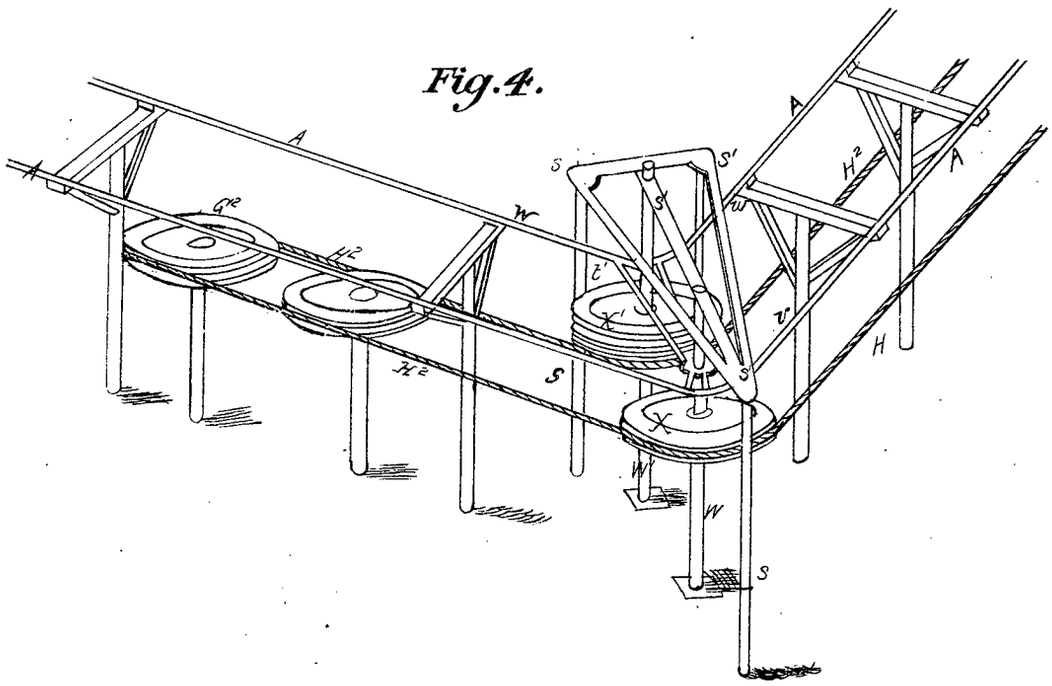

Fig. 5.

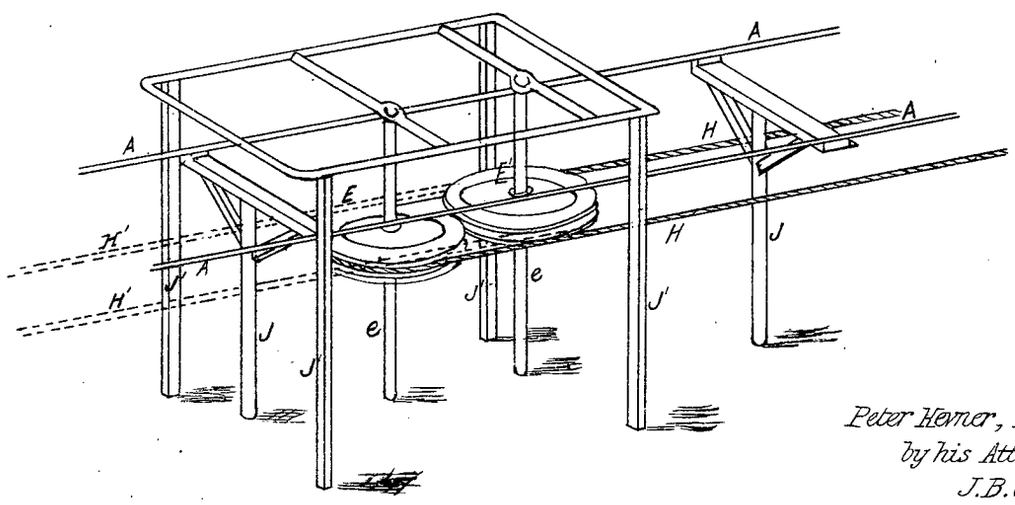

Peter Herner, Inventor,
by his Attorney
J.B. Carter.

This is the Sheet of Drawings marked 'C' referred to in the annexed Letters of Registration, granted to Peter Herner, this fifteenth day of March, A.D. 1880. Augustus Loftus.

Sheet. 3.

Fig. 6

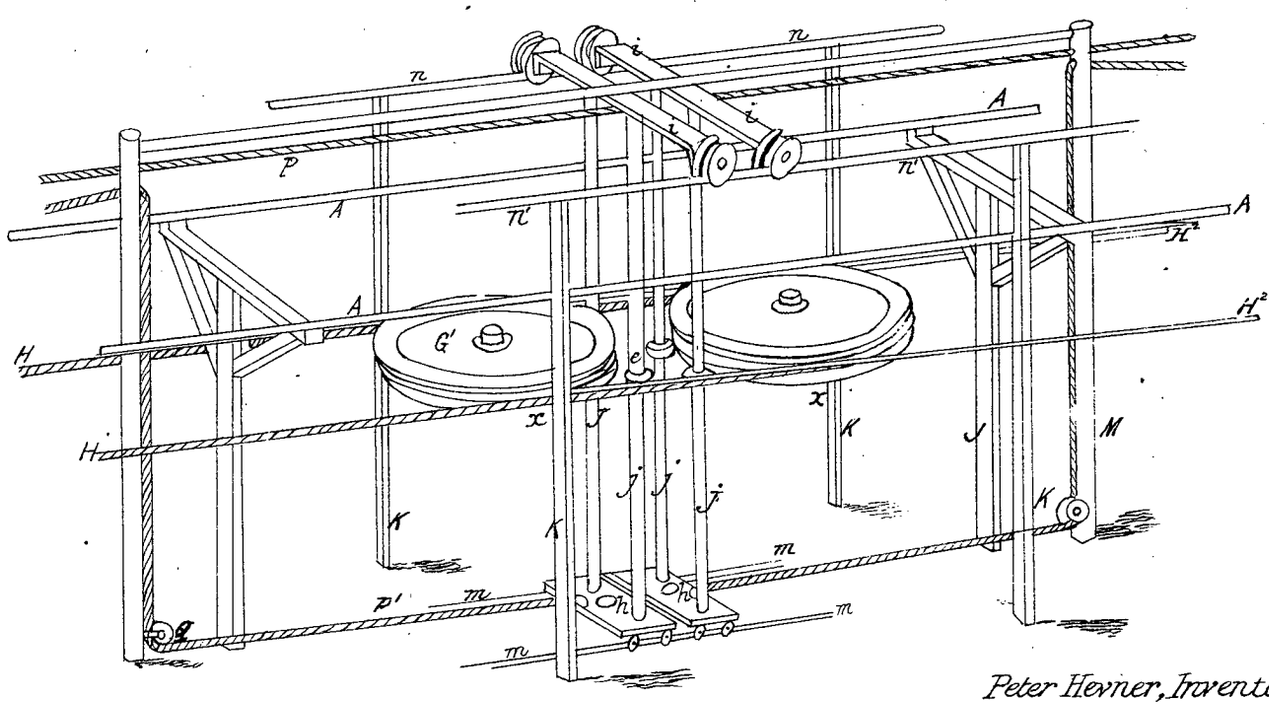

Peter Hevner, Inventor
by his attorney
J.B. Carter

This is the Sheet of Drawings marked D referred to in the annexed Letters of Registration, granted to Peter Hevner; this fifteenth day of March, A.D. 1880.

Augustus Loftus.

(Sig. 357-)

A.D. 1880, 19*th March*. No. 811.

IMPROVEMENTS IN SCREW-BOLTS AND THEIR NUTS, &c.

LETTERS OF REGISTRATION to Alfred Buckingham Ibbotson and Frederick John Talbot, for Improvements in and relating to Screw-bolts and their Nuts, and other articles with screw-threaded holes, and in the manufacture of implements for punching these holes.

[Registered on the 20th day of March, 1880, in pursuance of the Act 16 Vic. No. 24.]

BY HIS EXCELLENCY THE RIGHT HONORABLE SIR AUGUSTUS WILLIAM FREDERICK SPENCER LOFTUS (commonly called LORD AUGUSTUS LOFTUS), Knight Grand Cross of the Most Honorable Order of the Bath, a Member of Her Majesty's Most Honorable Privy Council, Governor and Commander-in-Chief of the Colony of New South Wales and its Dependencies.

TO ALL TO WHOM THESE PRESENTS SHALL COME, greeting:

WHEREAS ALFRED BUCKINGHAM IBBOTSON, of Florence, Italy, and FREDERICK JOHN TALBOT, of Sheffield, England, have by their Petition humbly represented to me that they are the authors or designers of a certain invention or improvement in manufactures, that is to say, of an invention entitled "'Improvements in and relating to Screw-bolts and their Nuts, and other articles with screw-threaded holes, and in the manufacture of implements for punching these holes," which is more particularly described in the specification and the sheet of drawings which are hereunto annexed; and that they, the said Petitioners, have deposited with the Honorable the Treasurer of the said Colony of New South Wales the sum of Twenty Pounds sterling, for defraying the expense of granting these Letters of Registration, as required by the Act of Council, sixteenth Victoria, number twenty-four; and have humbly prayed that I would be pleased to grant Letters of Registration, whereby the exclusive enjoyment and advantage of the said invention or improvement might be secured to them for a period of fourteen years: And I, being willing to give encouragement to all inventions and improvements in the arts or manufactures which may be for the public good, and having received a report favourable to the prayer of the said Petition, from competent persons appointed by me to examine and consider the matters stated therein and to report thereon for my information, am pleased, with the advice of the Executive Council, and in exercise of the power and authority given to me by the said Act of Council, to grant, and do by these Letters of Registration grant unto the said Alfred Buckingham Ibbotson and Frederick John Talbot, their executors, administrators, and assigns, the exclusive enjoyment and advantage of the said invention or improvement, for and during the term of fourteen years from the date hereof; to have, hold, and exercise unto the said Alfred Buckingham Ibbotson and Frederick John Talbot, their executors, administrators, and assigns, the exclusive enjoyment and advantage thereof, for and during and unto the full end and term of fourteen years from the date of these presents next and immediately ensuing, and fully to be complete and ended: Provided always, that if the said Alfred Buckingham Ibbotson and Frederick John Talbot shall not, within three days after the granting of these Letters of Registration, register the same in the proper office in the Supreme Court, at Sydney, in the said Colony of New South Wales, then these Letters of Registration, and all advantages whatsoever hereby granted, shall cease and become void.

In witness whereof, I have hereunto set my sign manual, and have caused the present Letters of Registration to be sealed with the seal of the said Colony of New South Wales, at Government House, Sydney, in New South Wales, this nineteenth day of March, in the year of our Lord one thousand eight hundred and eighty.

[L.S.] AUGUSTUS LOFTUS.

SPECIFICATION

Improvements in Screw-bolts and their Nuts, &c.

SPECIFICATION of ALFRED BUCKINGHAM IBBOTSON, of Florence, Italy, and FREDERICK JOHN TALBOT, of Sheffield, England, for an invention entitled "Improvements in and relating to Screw-bolts and their Nuts, and other articles with screw-threaded holes, and in the manufacture of implements for punching these holes."

OUR invention relates to improvements in screw-fastenings, which consist of screws or bolts, and nuts, or tapped holes that have their screw-threads formed relatively in a peculiar manner, so that when first formed the male and female parts do not fit each other throughout their entire extent and cannot be screwed together like ordinary screw-bolts and nuts, but have to be forced together, and when properly screwed together they lock each other so effectually that the accidental slackening or loosening of the bolt or nut is impossible, and thus the advantage of locking the said bolt or nut without any separate or special locking device is secured.

The said invention also partly relates to punches for forming the nuts and bolt-holes.

According to one method of carrying the said invention into effect, the peculiarly formed threads in the one part may be used in combination with ordinary threads in the other part of the screw fastening; we are thereby enabled to make use of ordinary iron screwed bolts, or ordinary iron screwed nuts or bolt-holes in such a manner that, without any special or separate locking device, these fastenings may be rendered so permanently tight when screwed up that they will resist the loosening or slackening effect of any vibration to which they can be subjected.

These improvements comprise a screw fastening, consisting of a nut or tapped hole (in which the screw-threads are cut in a peculiar manner) in combination with an ordinary screw-bolt. In this case the screw-threads in the nut or bolt-hole are of hard or hardened metal, and instead of being made to fit the bolt in the usual manner, the nut or hole is so tapped that it is too small to be screwed for the full length of its screw-thread upon or to admit the said bolt without reducing the thread on the latter, and the desired result is effected by forcing the nut upon the bolt or forcing the bolt into the hole. But according to one part of this invention this result is obtained by reducing the thread on an ordinary screw-bolt; that is to say, when the hard metal nut or hole tapped in hard metal is used in combination with an iron screw or bolt whose screw-threads are of a somewhat larger diameter and of softer metal, the hard threads of the nut or bolt-hole will either act like a screw-plate to cut their way on and into the softer metal of the bolt or will compress the threads on the bolt. This method is advantageous for the reason that it obviates the necessity for the extreme accuracy in the length of screwing which is required when specially prepared bolts are used.

The said improvements also comprise a screw fastening, consisting of a screw-bolt with peculiarly cut threads, in combination with a nut or bolt-hole tapped in the ordinary manner. In this case we form the bolt entirely or partially of hard or hardened metal, and with its threads, or some of them, of such a diameter that they cannot enter the nut or hole without acting like a screw-tap to cut their way into the softer screw-threads of the said nut or hole. Thus in both cases we cause the two kinds of threads to have such a close gripping contact when screwed together as will effectually resist the loosening effect of vibration; and this object is accomplished in a very convenient and economical manner, as the special formation or preparation of the part which has the thread of soft metal is avoided and rendered unnecessary; for in cases where it is desired to use ordinary screwed iron bolts, particularly fish-bolts, which already exist and are in use in great quantities, it will only be necessary to replace the ordinary nuts with nuts made according to this invention, and thereby obtain the great advantages to be derived from its adoption at a trifling cost; or if (by reason of their much greater strength) steel bolts are preferred, such steel bolts may be made according to this invention, and may be used in connection with ordinary screwed iron nuts or bolt-holes, or we may use steel nuts, according to this invention, with specially hard threads, in combination with ordinary screwed bolts that are made of steel, which is softer than the cutting threads of the nuts.

The said invention is illustrated in the accompanying drawing, in which figure 1 is a plan, and figure 2 is a sectional side view, showing a nut with peculiarly formed threads used in combination with an ordinary bolt; *a* is the nut; *b* is the bolt; *c c* are threads in the nut of such a diameter as to fit the bolt in the ordinary manner; *d d* are threads in the nut of smaller diameter, and which have to be forced upon the threads of the bolt, and when forced thereon will cut into and become fixed on the same; *e e* are grooves or slots, which are formed partially through the nut; *f f* are the cutting edges of the threads. Figures 1^a and 2^a are similar views, showing slight modifications in the nut.

Figure 3 is a sectional elevation of a bolt, with peculiarly formed threads, applied to an ordinary iron nut; *a* is the nut; *b* is the bolt; *g g* are threads on the bolt, of such a diameter as to fit the threads in the nut in the ordinary manner; *h h* are threads of a larger diameter, and which will not enter the said nut without force, and which, when forced into the nut, cut into the threads in the same, and thereby secure the bolt tightly in the said nut.

Figures 4 and 5 are longitudinal sections of nuts which have their threads smaller in diameter at one end than at the other end of the same, according to and for the purpose of this invention.

Figure 6 is a plan, and figure 7 is a longitudinal section of a nut with a peculiarly formed thread, showing a modification of figure 1, the grooves or slots *e* being formed only partially through the said nut.

Figure 8 is a plan, and figure 9 is a longitudinal section of a nut showing another modification in the formation of the said grooves.

Figure 10 is a sectional elevation, illustrating a modification of figure 3, and showing one method of using a bolt which has a peculiarly formed thread, as herein described, with an ordinary tapped hole in a plate; *b* is the bolt; *i* is the plate; the hard threads at the part *h* of the bolt are made too large in diameter to enter the threads in the hole of the plate without force and to be screwed into the plate have to cut their way into the same, and when thus screwed into the said plate with the bolt will be tightly secured therein.

Figures 11 to 18 illustrate modifications in the formation of the slots in the nuts, that is to say:—

Figures 11 and 12 are plans; figure 13 is a side elevation of figure 12; figures 14 and 15 are plans; figure 16 is a side elevation of figure 15; figure 17 is a longitudinal section; figure 18 is a plan of figure 17.

Figure 19 is a side elevation of a bolt showing a groove or slot at *j*.

Figure

Figure 20 is a sectional elevation showing the application of a fully or completely tapped nut *a* to a partially cut bolt *b*; *c c* are the fully cut threads on the bolt; *k k* are the incomplete or partially cut threads on the bolt; these threads are so proportioned to each other that as the nut is forced on the bolt the hard threads of the nut will complete the cutting of the threads on the bolt as hereinafter described.

Figure 21 is a longitudinal section of a nut having its threads *c c* fully tapped or cut, and its threads *l l* only partially tapped or cut, so that the hard threads of a fully screwed bolt may complete the cutting or tapping of the threads in the nut as hereinafter described.

Figures 22 and 23 illustrate a further modification of the said invention as hereinafter described.

Figures 24, 25, 26, 27, 28, and 29 are transverse sections of our improved punches for the formation of grooves or slots in the nuts or plates.

Figure 30 is a side view of figure 29.

In carrying this invention into practice in connection with a peculiarly tapped nut *a* or hole, and an ordinary screwed iron or soft steel bolt *b*, as shown in figures 2, 2ª, 7, and 9, the material composing the threads in the bolt hole or of which the nut is formed should be steel, which may be in some instances hardened or tempered, or it should be iron, with the screw-threads case or surface hardened, and the nut or hole is cut or tapped at one end with full threads, as shown at *c c*, of sufficiently large diameter to be screwed upon the bolt, and the remaining portion of the hole is tapped with screw-threads of a lesser diameter, as shown at *d d*; the parts *c c* and *d d* on which the threads are cut are preferably nearly parallel, or the nuts or bolt-holes are so tapped that the threads in one end of the bolt-hole are large enough in diameter to pass freely on the screwed end of the bolt, but gradually diminish to the opposite end of the hole, as in figures 4 and 5; and after one of the said nuts has been screwed on the said ordinary screwed iron or soft steel bolt for a certain distance to secure the pieces together, then by the aid of a spanner or other suitable implement the bolt may be forced forward into the bolt-hole, or the nut may be forced forward on the bolt as far as required for firmly tightening up the articles to be compressed or secured by or between the same; it will then be found that during this process of forcibly screwing the parts or pieces together the hard threads of the bolt-hole or of the nut which have the smaller diameter have actually cut their way like a screw-plate into the softer metal of the threads of the screwed iron bolt, or in cases where we use a steel bolt either unhardened or hardened or tempered, or an iron bolt with its threaded surface case or surface hardened, in connection with an ordinary iron bolt-hole or ordinary iron nut, such steel or surface hardened bolt may have a taper thread formed upon it with the smallest diameter of its thread (corresponding with the diameter of the thread in the bolt-hole or nut) at its end, as shown in figure 10, or those portions of the thread of the bolt which are of larger diameter, and that are to be forcibly screwed in the bolt-hole or nut to complete the tightening up, may be formed furthest from the end of the said bolt, and may be made parallel and of a larger diameter than the thread on its end, which may also be parallel, as shown in figure 3, so that in these cases also the forcing of the large portions of the bolt into the bolt-hole, or the forcing of the ordinary nut forward on these threads of larger diameter on the bolt, will have the effect of deepening the threads in the bolt-hole or nut. In all of the above cases some portions of the male and female screw-threads will thus be brought into such absolutely close contact that they will adhere almost as closely and tightly as if welded together or formed of one solid piece of metal.

To facilitate the action of the hard portion of the female threads, shown at *d*, figures 2, 2ª, 7, 9, or the large hard threads of the male screws, shown at *h*, figure 3, upon the soft threads in which they are screwed, it is found very advantageous to form grooves or slots, *e*, through the entire length of the hard threads of the nuts, as in figures 1ª, 8, 9, 11, or through those portions of them which are required to act as screw-plates, as shown in figures 1, 6, 7, 12, 13, 14, 15, 16, 17, 18, or through the hard threads of the bolts, as shown at *j*, figure 19. The sharp edges formed on the threads where these grooves pass through them enable them to cut their way more easily than they otherwise would do, and obviate the necessity for the exercise of force that would tend to strain or break the bolts; moreover they carry off any rust or grit which may have accumulated in the softer thread as well as the metal they may cut from the same.

In some instances, instead of obtaining the desired result by a difference of diameter, we may effect it by a difference or an interruption of pitch of the threads of the bolt or in the nut or hole.

Although we prefer that the screw-threads on the one part which have to be forced into or through the threads of the other part should be of steel or hardened metal, yet in some instances they may be of iron or of unhardened steel.

To form the said grooves or slots in the bolt-holes or in the nuts expeditiously and cheaply, it has been found desirable to use punches having projections with cutting edges on their sides so that they will punch out the holes and the grooves or slots at one and the same operation, but such peculiarly shaped punches have hitherto been very costly to make; by this invention, however, the punches are now formed of steel bars of the proper quality and temper, and with the projections in solid or in one piece therewith, by rolling the said bars between suitably shaped rolls, the said projections extending along their entire length, as shown in figure 30, that is to say, these bars are in all respects finished by the said rolls, so that when taken therefrom they have the precise and exact section required for the finished punches, as shown in figures 24 to 29; they therefore only require to be cut off in proper lengths, shaped at their ends, hardened and tempered, and then fitted into a strong socket fixed in the punching machine or nut-making machine.

According to a further modification of our invention, when a fish-plate in which we form fully tapped or threaded bolt-holes is made of steel we use bolts or screws made of softer metal, by preference of iron, and cut their screw-thread upon them, only a portion of the length that will be required to enter the tapped hole or nut, as shown by the full lines, figure 23, so that when such bolts are being screwed into the said steel fish-plate, the thread in the latter being formed of harder metal than the said bolts will, in the act of screwing up during the last few turns of the wrench or other implement, act like a screw-plate and will cut the remainder of the screw-thread required for tightening up the joint on the said bolts or screws on that portion of their surface shown by the dotted lines. When the fish-plates are made of softer metal than steel we may case-harden or otherwise harden the threads in their tapped bolt-holes; or when they are made of steel we may harden and temper those parts to enable them to accomplish the same object, namely, the completion of the thread upon the softer and partially screwed bolts or screws while the same are being forcibly screwed into the said plates. On the other hand, when the tapped fish-plates are formed of iron or of other metal

softer

softer than steel, the threads of their tapped holes may be only partially cut and the bolts or screws have their threads fully cut upon them; the said bolts or screws are made of steel, tempered or untempered, having their threads case-hardened, or otherwise made harder than the thread of the said hole, so that when the said bolts or screws are screwed into such bolt-holes with the necessary force their hard threads will cut or form the remainder of the thread in the said holes; or instead of tapping any or all of the bolt-holes in the fish-plates, steel nuts, tempered or untempered, and with properly cut threads or iron nuts, with such threads case or surface hardened, may be used for the tightening up and completing the cutting of the threads of the partially cut bolts or screws,—or nuts of softer metal than steel, having their threads partially cut, as shown in figure 22, may be used in connection with steel bolts, tempered or untempered, and which have their threads properly or fully cut,—or such nuts may be used with iron bolts or set screws that have properly cut threads, case or surface hardened, for the purpose of cutting the remainder of the partially cut threads in the nuts, shown in figure 22 in the act of screwing the said nuts and bolts together.

This invention is specially applicable for making secure and permanently tight joints for railway rails.

Having thus fully described the said invention and the manner of performing the same, we wish it understood that we claim—

First—In a screw-fastening device which consists of two parts, namely, a screw or bolt and a nut or tapped hole, the formation of a portion of the screw-threads in the said nut or hole of too small a diameter (or otherwise unfit) to permit the threads of the screw or bolt to enter them (and either with or without grooving them to form cutting edges), so that when the two parts of the said fastening are screwed together, the smaller threads in the nut or bolt-hole will have to be forced through or over the threads of the bolt, whereby the threads of the nut or bolt-hole will have a close grip or hold upon the threads of the screw or bolt, and will ensure the permanent security of the fastening, substantially as above set forth.

Second—In a screw-fastening device consisting of two parts, namely, a screw or bolt and a nut or tapped hole, the formation of a portion of the threads of the screw or bolt of too large a diameter (or otherwise unfit) to enter the threads in the nut or bolt-hole (and either with or without grooving them to form cutting edges) so that the said threads of the screw or bolt when screwed into the said nut or hole will have to be forced into and cut their way through the threads thereof, and will thereby have a close grip upon the threads of the nut or bolt-hole, and will ensure the permanent security of the fastening, substantially as above set forth.

Third—As a new article of manufacture, a nut grooved or slotted in such a manner as to form cutting edges, *f*, on its screw-threads, substantially as and for the purposes specified.

Fourth—As a new article of manufacture, a screw or screw-bolt, grooved or channelled in such a manner as to form cutting edges on its screw-threads, substantially as shown at *j* in figure 19, and for the purpose specified.

Fifth—The modifications of our invention described with reference to figures 20, 22, and 23 of the drawing, for the purposes specified.

Sixth—As a new article of manufacture, a punch, with a projection or projections *m* thereon, formed by rolling a bar or rod between suitably shaped rolls, substantially as and for the purpose specified.

In witness whereof, we, the said Alfred Buckingham Ibbotson and Frederick John Talbot, have hereto set our hands and seals, this twenty-ninth day of November, 1879.

ALFRED BUCKINGHAM IBBOTSON.

Witness to the signature of Alfred Buckingham Ibbotson—
LONGWORTH POWERS.

FREDERICK JOHN TALBOT.

Witness to the signature of Frederick John Talbot—
HENRY H. LAKE.

This is the specification referred to in the annexed Letters of Registration granted to Alfred Buckingham Ibbotson and Frederick John Talbot, this nineteenth day of March, A.D. 1880.

AUGUSTUS LOFTUS.

REPORT.

Sir, Sydney, 23 February, 1880.

We have the honor to report that we see no objection to the issue of Letters of Registration to Messrs. Ibbotson and Talbot, for their invention of "Improvements in and relating to Screw-bolts and their Nuts, and other articles with screw-threaded holes, and in the manufacture of implements for punching these holes," in accordance with their Petition, specification, and claim, transmitted to us under your blank cover communication, No. 80/1,160, of the 7th February.

We have, &c.,
JOHN WHITTON.
WILLIAM C. BENNETT.

The Principal Under Secretary.

[Drawings—one sheet.]

Fig.1.

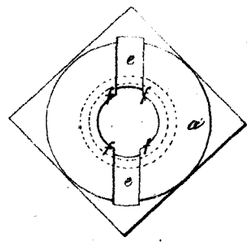

Fig.1.a

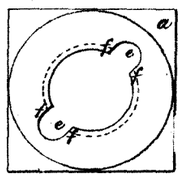

Fig.2.

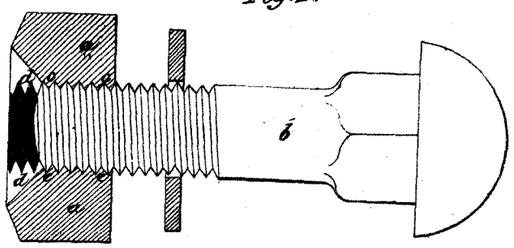

Fig.2.a

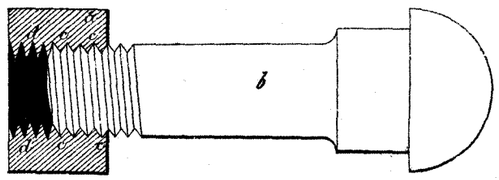

Fig.3.

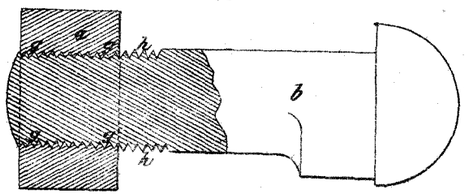

Fig.4.

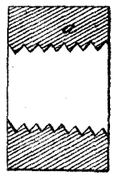

Fig.5.

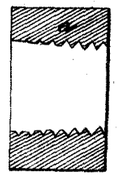

Fig.6.

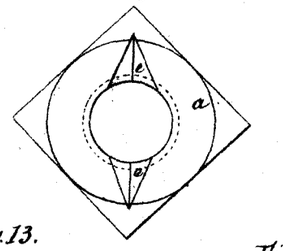

Fig.7.



Fig.8.

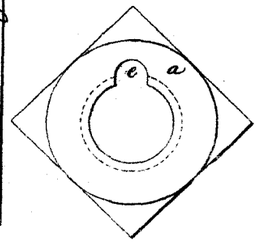

Fig.9.

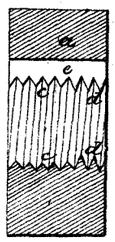

Fig.10.

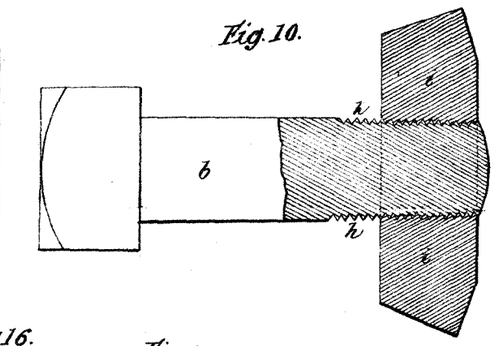

Fig.11.

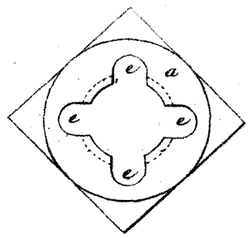

Fig.12.

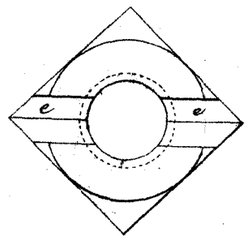

Fig.13.

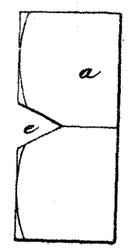

Fig.14.

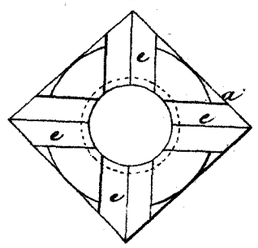

Fig.15.

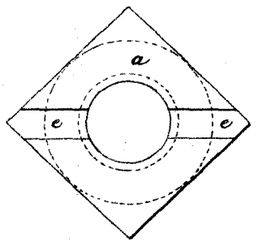

Fig.16.

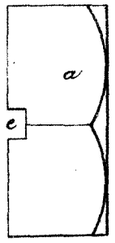

Fig.17.

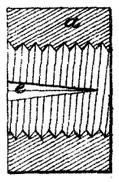

Fig.18.

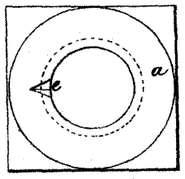

Fig.19.

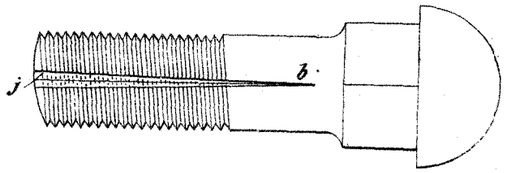

Fig.20.

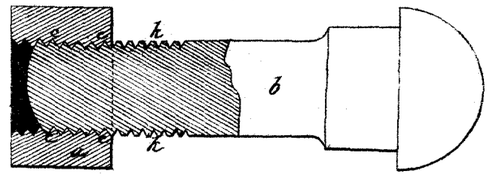

Fig.22.

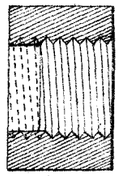

Fig.23

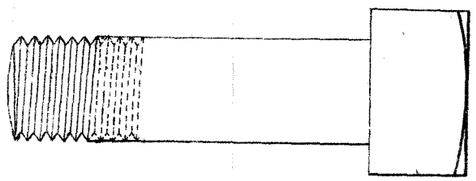

Fig.24

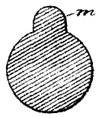

Fig.25

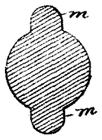

Fig.26.

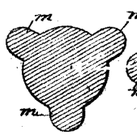

Fig.27

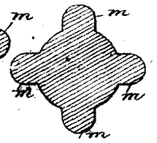

Fig.28.

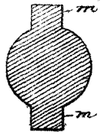

Fig.29.

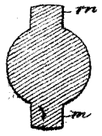

Fig.30.

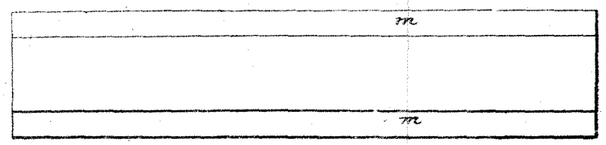

Fig.21.

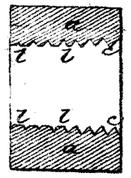

(Sig. 357)

This is the Sheet of Drawings referred to in the annexed Letters Patent Dated this twenty fourth day of March 1841

Signed Loftus

Specification of Benjamin Gantzow of Birmingham in the County of Warwick Gentleman for an Improvement in Locks Latches and Bolts for Doors Gates Shutters Sashes and other Fastenings. Sealed 24th March 1841

A.D. 1880, *2nd April.* No. 812.

IMPROVEMENTS IN THE PRODUCTION OF ARTIFICIAL COLD.

LETTERS OF REGISTRATION to Norman Selfe, for Improvements in the production of Artificial Cold.

[Registered on the 3rd day of April, 1880, in pursuance of the Act 16 Vic. No. 24.]

BY His Excellency the Right Honorable Sir Augustus William Frederick Spencer Loftus (commonly called Lord Augustus Loftus), Knight Grand Cross of the Most Honorable Order of the Bath, a Member of Her Majesty's Most Honorable Privy Council, Governor and Commander-in-Chief of the Colony of New South Wales and its Dependencies.

TO ALL TO WHOM THESE PRESENTS SHALL COME, greeting:

WHEREAS Norman Selfe, of Sydney, in the Colony of New South Wales, engineer, hath by his Petition humbly represented to me that he is the author or designer of a certain invention or improvement in manufactures, that is to say, of an invention of certain "Improvements in the production of Artificial Cold," which is more particularly described in the specification, marked A, and the three sheets of drawings, marked B, C, and D respectively, which are hereunto annexed; and that he, the said Petitioner, hath deposited with the Honorable the Treasurer of the said Colony of New South Wales the sum of Twenty Pounds sterling, for defraying the expense of granting these Letters of Registration, as required by the Act of Council, sixteenth Victoria, number twenty-four; and hath humbly prayed that I would be pleased to grant Letters of Registration, whereby the exclusive enjoyment and advantage of the said invention or improvement might be secured to him for a period of fourteen years: And I, being willing to give encouragement to all inventions and improvements in the arts or manufactures which may be for the public good, and having received a report favourable to the prayer of the said Petition, from competent persons appointed by me to examine and consider the matters stated therein and to report thereon for my information, am pleased, with the advice of the Executive Council, and in exercise of the power and authority given to me by the said Act of Council, to grant, and do by these Letters of Registration grant unto the said Norman Selfe, his executors, administrators, and assigns, the exclusive enjoyment and advantage of the said invention or improvement, for and during the term of fourteen years from the date hereof; to have, hold, and exercise unto the said Norman Selfe, his executors, administrators, and assigns, the exclusive enjoyment and advantage thereof, for and during and unto the full end and term of fourteen years from the date of these presents next and immediately ensuing, and fully to be complete and ended: Provided always, that if the said Norman Selfe shall not, within three days after the granting of these Letters of Registration, register the same in the proper office in the Supreme Court, at Sydney, in the said Colony of New South Wales, then these Letters of Registration, and all advantages whatsoever hereby granted, shall cease and become void.

In witness whereof, I have hereunto set my sign manual, and have caused the present Letters of Registration to be sealed with the seal of the said Colony of New South Wales, at Government House, Sydney, in New South Wales, this second day of April, in the year of our Lord one thousand eight hundred and eighty.

[L.S.] AUGUSTUS LOFTUS.

A.D. 1880. No. 812.

Improvements in the production of Artificial Cold.

A.

SPECIFICATION.

TO ALL TO WHOM THESE PRESENTS SHALL COME, I, NORMAN SELFE, of Sydney, in the Colony of New South Wales, send greeting:

WHEREAS I am the author of certain Improvements in the production of Artificial Cold, and am desirous of obtaining Letters Patent securing unto me Her Majesty's special license that I, my executors, administrators, or assigns, or such others as I, my administrators, executors, or assigns, may at any time agree with, and no others, may use, exercise, or vend the same in the Colony of New South Wales, during the term of fourteen (14) years succeeding the date at which this instrument is left at the office of the Colonial Secretary, Sydney: And whereas in order to obtain the said Letters Patent it is necessary that I particularly ascertain and describe the nature of my invention and the manner in which its operations are performed: Now know ye, that the nature of my improvements is set forth in this specification and accompanying drawings, that is to say, my invention consists of "Certain Improvements in the production of Artificial Cold, by a combination of mechanical devices, and the alternate compression and expansion of air or gases." It has been long known that the latent heat of air or gas is rendered sensible by compression, and that it may be removed, and also that if after its removal the gas be allowed to expand, the resulting temperature will be considerably less than the original; many machines for the production of cold have been based on these principles, but the power given back by the expansion cylinder has been limited on account of the pressure and grade of expansion employed, also a large quantity of condensing water has been necessary to cool the compressed air and remove the sensible heat, such heat being lost. In my improved apparatus I make my compressing pump with two or more barrels of different capacities, and compress the air by two or more separate operations, and, if so desired, abstract a portion of the heat rendered sensible after each grade of compression. I am thus enabled to use great ranges of pressure. In my expansion engine for getting back power from the compressed air I also employ two or more cylinders, and am thus able, by proportioning the relative areas of their pistons, to work at a high grade of expansion, without the use or complication of expansion valves; I am also able to pass the expanding air or gas through a refrigerator or exchanger after each separate expansion, to supply the heat which the expanded air is capable of taking up. In dealing with the sensible heat of compression, instead of passing my compressed air or gas through a worm or refrigerator surrounded by water, thus giving up the heat to the condensing water to be wasted, I arrange my machine so that I can utilize this heat in a vapour boiler or exchanger, by imparting it to a secondary and more volatile material, such as ether, ammonia, or other like substances which boil or give off vapour at a lower temperature than that of my primary material under compression. I thus require much less condensing water, which is of great importance, and I can use this secondary vapour, produced by heat in an engine, to assist in giving motion to the whole machine. After the secondary vapour has done work in its engine and parted with some of its heat, it leaves by the exhaust pipe and passes into a condenser or exchanger, where it gives up more of its heat to the cold expanded air or primary gas or vapour, and is thus liquefied. The resulting liquid is returned by a pump to the vaporiser or exchanger, to be again evaporated by the heat of compression and work the vapour engine as before. The compressed air, in parting with its heat in the vapour boilers or exchangers, will deposit a great deal of the moisture it carries with it, and dry air will be delivered to the chamber to be cooled; the deposited water can be drawn off by suitable cocks or taps. If it is required to cool chambers or store-rooms I can pass the expanded air direct by suitable channels into the cold room, and when it is necessary to have the air very dry it can be passed over chloride of calcium or other suitable material for absorbing any moisture that may be left. If surface condensers or exchangers are used for taking up the heat of compression, no further moisture will be carried by the air except that taken up from the cold room and its contents. If it is required to make ice or apply cold to other purposes, I can let the expanded air pass through a solution of chloride of calcium or other material that will not freeze at 32° Fahr., and use this solution as a medium, by many well-known arrangements with moulds and otherwise. If I do not require to utilize the sensible heat of compression I can pass the expanded air through an ordinary surface condenser, or condense it by direct contact with water in an ordinary jet condenser. In the latter case I use a shallow vessel, and let the compressed air escape into the condenser through numerous perforations under the level of the water, and make use of taps to remove the water taken up by the air; and in case of using a non-freezing medium for refrigeration I can let the expanded air take up the heat from such solution by passing the air through it in the same manner; the object of having the vessel shallow being to put as little additional pressure as possible upon the compressed or expanded air. In applying my invention to cold chambers for preserving meat or other organic substances from decay, and where it is not desirable to change the air or run the risk of introducing moisture, I construct such chambers with an outer air space or jacket, and after the enclosed air and other contents in the chamber are reduced to the temperature required, I keep the jacket at a low temperature by the circulation of cold air, and thus prevent the infiltration of heat into the chamber itself. For the purpose of making ice by the direct contact of cold air with the water to be frozen, and to save the loss of time occasioned by the non-conducting power of the ice itself, I use shallow trays and freeze the water in a series of strata, letting a thin film of water flow into the ice as fast as it is produced, either by a cock to be worked by hand or by an automatic arrangement. For the purpose of driving my machine I apply an ordinary simple or compound engine direct, or drive by belts and pulleys, or other suitable devices, from any available source of power. If the heat of compression is imparted to the secondary vapour and converted into power, there will be a corresponding diminution in the quantity of condensing water required. In abstracting the heat of compression from air by the direct contact with water, under ordinary arrangements the water has to be pumped against the pressure of the compressed air, and this requires as much power to effect it as is measured by the weight of water multiplied by the height corresponding to the pressure against which it is pumped. Under my improved arrangements, the pump is made to abstract the water from the condenser by one side of the piston and force in fresh water by the other side of the piston, in such a way that the pressure of the water is balanced on both sides of the piston, and the power required is reduced to that necessary to overcome the friction of the parts and raise the water the actual height it has to be lifted; in other words, the water leaving the condenser works a water engine to assist in pumping the water going into the condenser. In

Improvements in the production of Artificial Cold.

In the accompanying drawing fig. 1 represents an arrangement of refrigerating apparatus combined with a cooling or freezing chamber, and the following letters indicate its various parts :—A is the cylinder of a steam-engine fitted with piston, piston-rod, and suitable valves. B^1 is the cylinder or barrel of a compressing pump fitted with piston, piston-rod, and suitable valves B^2 is the cylinder or barrel of a compressing pump fitted with piston, piston-rod, and suitable valves, but smaller than cylinder B^1. C^1 is the cylinder of an air-engine fitted with piston, piston-rod, and suitable valves. C^2 is the cylinder of an air-engine fitted with piston, piston-rod, and suitable valves, but larger than C^1. D is the cylinder of an air or vapour engine, fitted with piston, piston-rod, and suitable valves. E is a temperature exchanger or vaporiser, fitted with tubes or other suitable means of transmitting heat from one substance to another by contact with metallic surfaces. F is a similar apparatus to E. G is a temperature exchanger or surface condenser. H is a temperature exchanger or vapour condenser. J is a cooling chamber or freezing room. K is an air space around cooling chamber J. L is a crank-shaft connected to the piston-rods of the cylinders A, B^1, B^2, C^1, C^2, D, by means of connecting rods, levers, or other suitable means. M M are fly-wheels on shaft L. N N are inner and outer doors of cooling chamber J. *a* is a pipe leading from air space K to cylinder B^1. *b* is a pipe leading from cylinder B^1 to vaporiser E. *c* is a pipe leading from vaporiser E to cylinder B^2. *d* is a pipe leading from cylinder B^2 to vaporiser F. *e* is a pipe leading from vaporiser F to surface condenser G. *f* is a pipe leading from surface condenser G to cylinder C^1. *g* is a pipe leading from cylinder C^1 to condenser H. *h* is a pipe leading from condenser H to cylinder C^2. *i* is a pipe leading from cylinder C^2 to air space K or chamber J. *k* is a pump. *l* is a pipe leading from pump *k* to vaporiser E. *m* is a pipe leading from vaporiser E to vaporiser F. *n* is a pipe leading from vaporiser F to cylinder D. *o* is a pipe leading from cylinder D to condenser H. *p* is a pipe leading from condenser H to pump *k*. *q r* are inlet and outlet pipes for supplying circulating water to condenser G.

Having now described the various leading portions of my machine, the method of its operation is as follows :—The machine is set in motion by admitting steam into cylinder A. The air which has been admitted through pipe *a* into cylinder B^1 is compressed, thus rendering sensible its latent heat, after which it passes through pipe *b* into vaporiser E, where it is cooled by contact, and then passes through pipe *c* into cylinder B^2. Here it is still further compressed, rendering its latent heat still more sensible, after which it passes through pipe *d* into vaporiser F, where it is again cooled ; it then passes through pipe *e* into surface condenser G, in which it is further cooled, and then passes through pipe *f* into cylinder C^1, where it expands against the resistance of the piston, and then passes through pipe *g* into vapour condenser H. Here it slightly takes up heat, and then passes through pipe *h* into cylinder C^2, in which it expands against the pressure of the piston, and then passes through pipe *i* into air space K or chamber J. Whilst the above operations are being performed ether is pumped by pump *k* into pipe *l*, through which it passes into vaporiser E, where it takes up heat from the hot air on the opposite sides of the metallic surfaces. It then passes through pipe *m* into vaporiser F, where it is still further heated by the hot air from cylinder B^2; this operation causing the volatilization of the liquid. The vapour or gas then passes through pipe *n* into cylinder D, where it expands against the resistance of the piston, performing work, and parting with heat ; it then passes through pipe *o* into vapour condenser H, where it gives up more heat, and, by coming into contact with the cold metal plates, is condensed ; it then passes through pipe *p* into pump *k*, and the process is continued as before.

Fig. 2 represents a simpler form of my apparatus. A is a cylinder of compressing engine fitted with piston, piston-rods, and suitable valves. B is a cylinder of compressing engine fitted with piston, piston-rods, and suitable valves. C is a cylinder of vapour engine fitted with piston, piston-rods, and suitable valves. D is a vaporiser fitted with tubes or other suitable means for transmitting heat. E is a surface condenser fitted with tubes or other suitable means for transmitting heat. F is a vapour condenser fitted with tubes or other suitable means for transmitting heat. G is a crank-shaft connected to piston-rods of cylinders C B A, by means of rods, levers, or by other suitable means. *a* is a pipe leading into cylinder A. *b* is a pipe leading from cylinder A through vaporiser D. *c* is a continuation of pipe *b*, leading through surface condenser E. *d* is a further continuation of pipe *b*, leading from surface condenser E to cylinder B. *e e* is a pipe leading from cylinder B to vapour condenser F. *f* is a continuation of pipe *e e*, leading through vapour condenser F. *g* is a further continuation of pipe *e e*, leading from vapour condenser F. *h h* are stop-cocks or taps for drawing off deposited water. *k k* are pipes leading from stop-cocks *h h*. *l* is a pump. *m m* is a pipe leading from vaporiser D to cylinder C. *n n* is a pipe leading from cylinder C to condenser F. *o* is a pipe leading from vaporiser E. *p* is a pipe leading from vaporiser E.

Having now described the various leading portions of this form of my machine, the method of its operation is as follows :—The machine having been set in motion by power applied to crank-shaft G, air is admitted through pipe *a* into cylinder A, where it is compressed, its latent heat being thus rendered sensible. It then passes through pipe *b* in vaporiser D, thence by means of pipe *c* through surface condenser E, where it is cooled by the pipe *c* being kept immersed in water. It then passes through pipe *d* into cylinder B, where it expands against the resistance of the piston, and then passes through vapour condenser F, by means of pipes *e e f g*. During the above process ether is pumped, by means of pump *l*, into vaporiser D, where, from contact with the exterior of pipe *b* (made warm by the hot air from cylinder A passing through it), it volatilizes, and the gas passes through pipe *m m* into cylinder C, where it expands against the resistance of the piston, and afterwards passes through pipe *n n* into vapour condenser F, in which it is condensed by coming into contact with the cold pipe *f*. During the passage of the air through pipes *b c f*, moisture carried by the air is deposited and drawn off by suitable cocks, taps, or other appliances, such as shown at *h h* on pipes *k k*.

Figs. 3 and 4 represent sections of a jet or water condenser fitted with exchanging pump. A is the cylinder or barrel of the pump. B is the piston. D^1 D^2 are inlet and discharge valves for admitting water to condenser. E E^2 are inlet and discharge valves for removing water from condenser. F is the condensing chamber. G^1 G^2 are pipes with perforations admitting air or gas to be cooled under the water level.

Fig. 5 represents an arrangement of pumps and engines combined on our sole-plate. A^1 A^2 are power cylinders. B^1 B^2 are compressing pumps. C^1 C^2 are air expansion engines.

Having

Improvements in the production of Artificial Cold.

Having now described my apparatus, I do not bind myself to the use of the whole of the several parts in one machine, neither do I confine myself to the exact form of cylinders, pumps, engines, condensers, or exchangers as set forth, as they may be varied on any of the well-known types; neither do I bind myself to the application of my improvements to machines working with atmospheric air, but what I do claim as novel is,—

Firstly—The arrangement of compressing pumps for refrigerating machinery with two or more barrels, in which the operation of compression is carried on and the heat taken up step by step.

Secondly—The use of a series of cylinders in which the compressed air is expanded and cold produced by steps.

Thirdly—The arrangement for utilizing the sensible heat of compression by imparting it to a volatile substance, and converting it into a vapour to do work in an engine, and thus reduce the quantity of condensing water required, and the power necessary to drive the machine.

Fourthly—The construction of jet condensers or exchangers, with perforations admitting air or gas below the level of the liquid.

Fifthly—The construction of freezing rooms or chambers, with an air jacket or surrounding chamber, in which cold air is circulated to prevent the infiltration of heat, and render further operations unnecessary in the freezing room itself after it is once cooled to the required temperature.

Sixthly—The construction of a pump or pumps for changing the condensing water under pressure, in such a way that the pressure of the water being removed balances the pressure against which the supply of water has to be pumped in.

Seventhly—The provision of shallow trays for freezing the ice in thin strata.

In witness whereof, I, Norman Selfe, have to this specification set my hand and seal, this twenty-fifth day of February, one thousand eight hundred and eighty.

NORMAN SELFE.

This is the specification, marked A, referred to in the annexed Letters of Registration granted to Norman Selfe, this second day of April, A.D. 1880.

AUGUSTUS LOFTUS.

REPORT.

Sir, Sydney, 1 March, 1880.

The application of Mr. Norman Selfe for Letters of Registration for "Improvements in the production of Artificial Cold" having been referred to us, we have examined the specification and drawings accompanying the same, and have now the honor to report that we see no objection to the issue of Letters of Registration as prayed for.

We have, &c.,
J. SMITH.
CHAS. WATT.

The Principal Under Secretary.

[Drawings—three sheets.]

B.

Fig 1

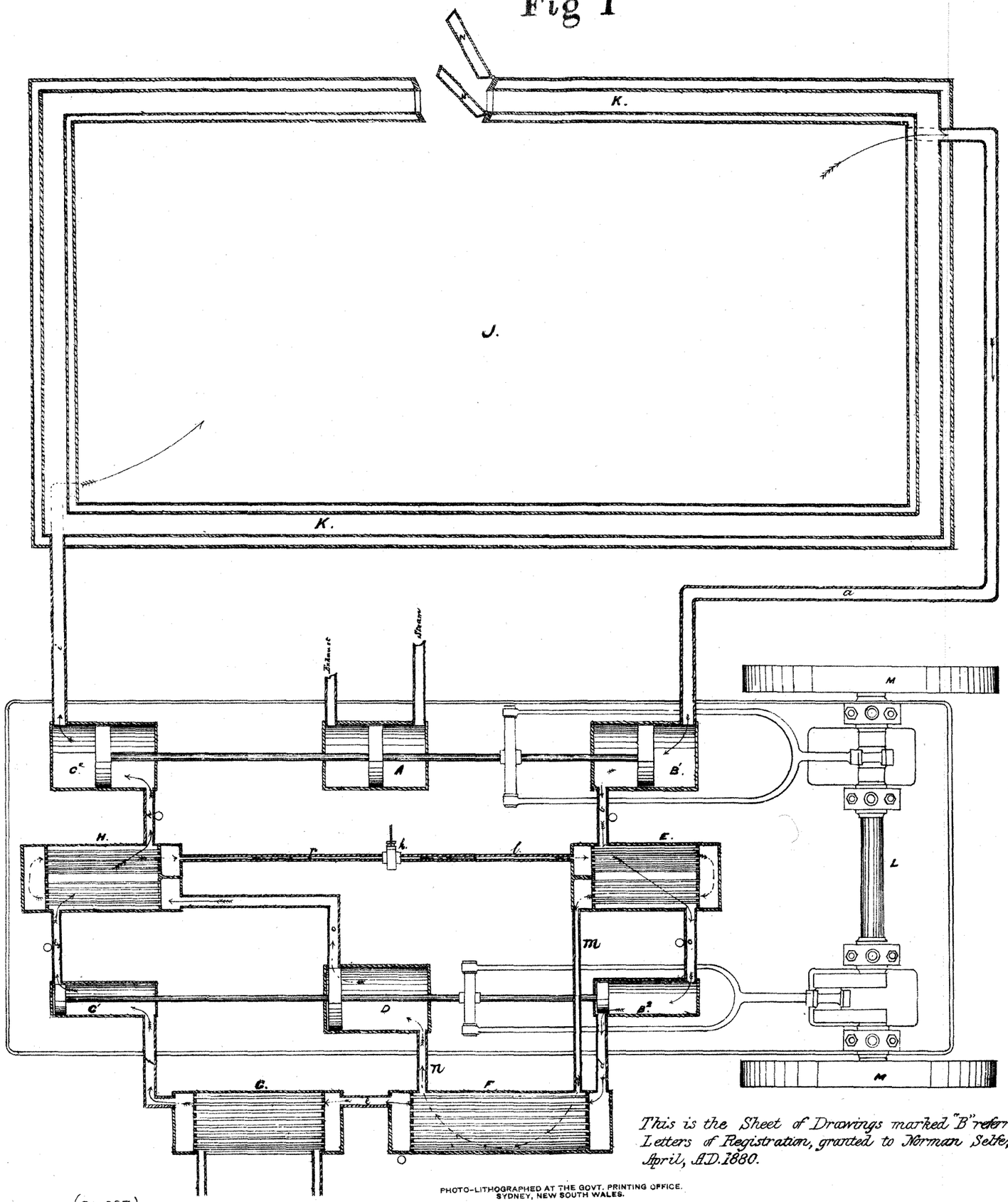

This is the Sheet of Drawings marked "B" referred to in the annexed Letters of Registration, granted to Norman Selfe, this Second day of April, A.D. 1880.

Augustus Loftus.

PHOTO-LITHOGRAPHED AT THE GOVT. PRINTING OFFICE.
SYDNEY, NEW SOUTH WALES.

(Sig. 357)

"C"

[812]

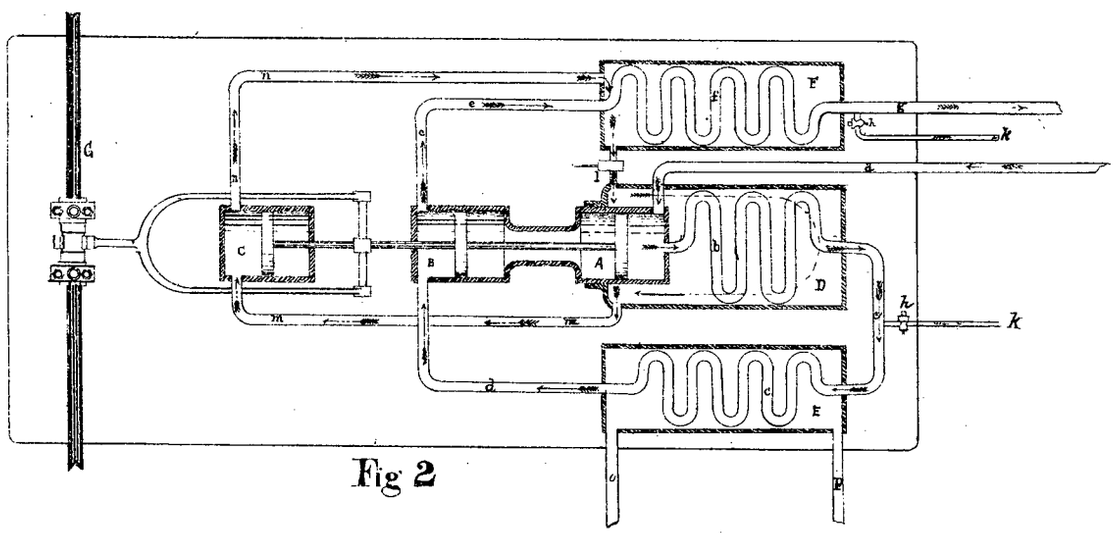

Fig 2

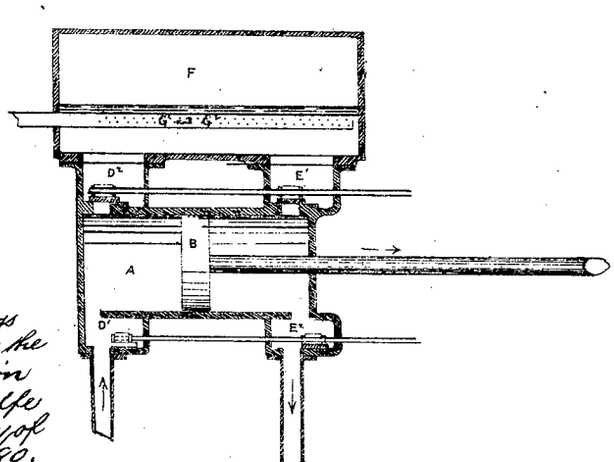

Fig 3.

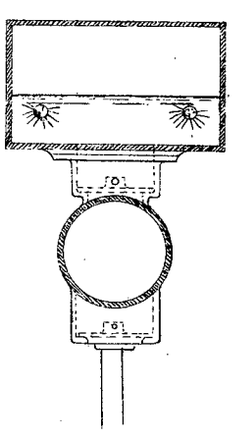

Fig 4

This is the Sheet of Drawings marked "C" referred to in the annexed Letters of Registration granted to Norman Selfe this Second day of April — A.D. 1880.

"Augustus Loftus"

(Sig. 357)

PHOTO-LITHOGRAPHED AT THE GOVT. PRINTING OFFICE, SYDNEY, NEW SOUTH WALES.

"D."

[812]

Fig. 5

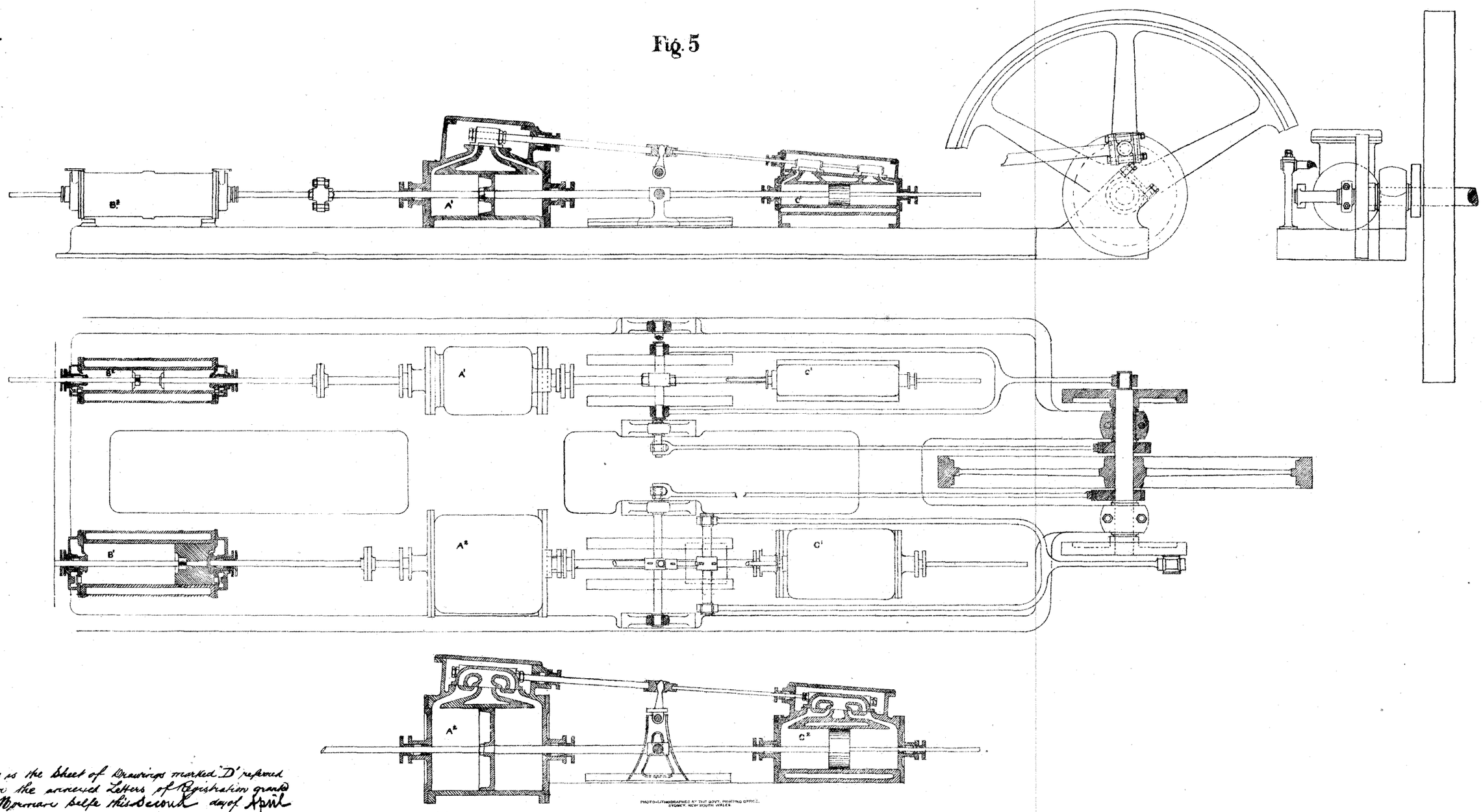

This is the Sheet of Drawings marked "D" referred to in the annexed Letters of Registration granted to Norman Selfe this Second day of April AD 1880.

"Augustus Softus" -

(Sig. 357)

PHOTO-LITHOGRAPHED AT THE GOVT. PRINTING OFFICE, SYDNEY, NEW SOUTH WALES

A.D. 1880, 2*nd April.* No. 813.

IMPROVEMENTS IN KILNS FOR DRYING MALT, GRAIN, &c.

LETTERS OF REGISTRATION to Samuel Burston, for Improvements in and relating to Kilns for drying Malt, Grain, and other materials.

[Registered on the 3rd day of April, 1880, in pursuance of the Act 16 Vic. No. 24.]

BY HIS EXCELLENCY THE RIGHT HONORABLE SIR AUGUSTUS WILLIAM FREDERICK SPENCER LOFTUS (commonly called LORD AUGUSTUS LOFTUS), Knight Grand Cross of the Most Honorable Order of the Bath, a Member of Her Majesty's Most Honorable Privy Council, Governor and Commander-in-Chief of the Colony of New South Wales and its Dependencies.

TO ALL TO WHOM THESE PRESENTS SHALL COME, greeting:

WHEREAS SAMUEL BURSTON, of Nos. 123 and 127, Flinders-street East, in the city of Melbourne and Colony of Victoria, malster, hath by his Petition humbly represented to me that he is the assignee of Charles W. Boynton, of Chicago, Illinois, United States of America, manufacturer, who is the author or designer of a certain invention or improvement in Manufactures, that is to say, of an invention entitled "Improvements in and relating to Kilns for drying Malt, Grain, and other materials," which is more particularly described in the specification and the sheet of drawings which are hereunto annexed; and that he, the said Petitioner, hath deposited with the Honorable the Treasurer of the said Colony of New South Wales the sum of Twenty Pounds sterling, for defraying the expense of granting these Letters of Registration, as required by the Act of Council, sixteenth Victoria, number twenty-four; and hath humbly prayed that I would be pleased to grant Letters of Registration, whereby the exclusive enjoyment and advantage of the said invention or improvement might be secured to him for a period of fourteen years: And I, being willing to give encouragement to all inventions and improvements in the arts or manufactures which may be for the public good, and having received a report favourable to the prayer of the said Petition, from competent persons appointed by me to examine and consider the matters stated therein and to report thereon for my information, am pleased, with the advice of the Executive Council, and in exercise of the power and authority given to me by the said Act of Council, to grant, and do by these Letters of Registration grant unto the said Samuel Burston, his executors, administrators, and assigns, the exclusive enjoyment and advantage of the said invention or improvement, for and during the term of fourteen years from the date hereof; to have, hold, and exercise unto the said Samuel Burston, his executors, administrators, and assigns, the exclusive enjoyment and advantage thereof, for and during and unto the full end and term of fourteen years from the date of these presents next and immediately ensuing, and fully to be complete and ended: Provided always, that if the said Samuel Burston shall not, within three days after the granting of these Letters of Registration, register the same in the proper office in the Supreme Court, at Sydney, in the said Colony of New South Wales, then these Letters of Registration, and all advantages whatsoever hereby granted, shall cease and become void.

In witness whereof, I have hereunto set my sign manual, and have caused the present Letters of Registration to be sealed with the seal of the said Colony of New South Wales, at Government House, Sydney, in New South Wales, this second day of April, in the year of our Lord one thousand eight hundred and eighty.

[L.S.]

AUGUSTUS LOFTUS.

SPECIFICATION

Improvements in Kilns for drying Malt, Grain, &c.

SPECIFICATION of SAMUEL BURSTON, of numbers 123 and 127, Flinders-street East, in the city of Melbourne and Colony of Victoria, malster (the assignee of Charles W. Boynton, of Chicago, Illinois, United States of America, manufacturer), for an invention entitled "Improvements in and relating to Kilns for drying Malt, Grain, and other materials."

THE present invention relates to improvements in kilns for drying malt, grain, and other material, but is more especially designed for drying malt.

The said invention comprises, first—a peculiar construction of the dumping trays of which the drying floor is composed; secondly—a principal air-flue combined with two single air-flues with a cut-off between them, and leading to separate drying-floors, the said flues being protected from grain coming from the floors into a hopper surrounding the flues by means of a deflector. The object attained by this construction of flues and cut-off is the discharge of hot air and gases from the furnaces into both parts or either part of a two-part hopper beneath the drying floor, so that when grain or malt contained on one-half of the floor is to be dumped into its respective part of the hopper below, the hot air and gases from the furnaces may be excluded and cold air admitted, to permit labourers or attendants to enter the drying-room in which such floor is to dump the grain. Thirdly: The combination with the main air-flue and its branches, and the two-part floor and hopper, of one or more furnaces, having side openings communicating with the main air-flue, whereby the escape of heat is prevented until a proper amount of atmospheric air is supplied.

In the accompanying drawing—Figure 1 is an elevation of a dry kiln or apparatus embodying these improvements, with the front of the building, front of the furnace, front of the main air-flue, and front of the hopper removed. Figure 2 is a plan or top view of the said apparatus with the larger portion of the sectional drying-room floor removed to show the construction below. Figure 3 is a sectional elevation on the line X X, figures 1 and 2. Figure 4 is a perspective view of the furnaces and case, and lower portions of the flues and their attached parts removed from the building. Figure 5 is a transverse section of one of the sections forming the drying-floor. Figure 6 is a broken longitudinal section of figure 5 taken on the line Z, figure 5.

A represents the building or exterior part of the said kiln, the drying chamber being removed. The floor is made of such form and size as to support and protect the apparatus as follows:—The foundation B of the furnaces may be of any ordinary or suitable construction. The furnace C has a semicircular dome, terminating in vertical sides, and is provided with an ordinary grate, N, but instead of having openings at the top for the escape of heat and gas it is provided with side openings, W, figure 3, for the escape of hot air and gas into an enlarged chamber, U, where cold air comes in contact with the gases from the furnaces, and tempers or properly modifies the heat which is to come in contact with the grain or malt on the drying-floor. This cold air is admitted to the interior of the enlarged chamber J by means of the doors I.

The furnace S S is provided with a hood, C^1, which extends down below the fuel on the grate N, to prevent the upward escape of heat until it is brought in contact with a proper quantity of cold air, for the purpose stated. In some localities and by the use of some kinds of coal the hood C^1 is required to bring the heated gases down lower than the holes W before escaping, in order that a better supply of atmospheric air may be obtained, while under other circumstances the furnace C will answer the purpose; but in any event the hot gases should escape at the sides of the furnaces and into a chamber at those places and commingle with all the oxygen they will retain without deadening the fire in the furnaces.

This will be the guide for admitting air to them. When this is done, anthracite coal can be used to produce combustion, and the products thereof may be admitted freely to the grain on the drying-floors without injuring it, and at the same time a heat is attained fully sufficient to dry all ordinary substances in a manner superior to that obtainable by any process now known for this purpose. The ordinary anthracite coal furnaces eliminate the products of combustion from one open end or at a flue at the top in such a body that oxygen cannot properly commingle with it.

According to this invention I use the maximum quantity of atmospheric air with the coal gases. To effectually utilize the coal gases and oxygen the air chambers at the sides of the furnaces should be each of a width corresponding to about one-third of the length of the furnaces, so that sufficient oxygen may come in contact with the fire jets at the middle parts of the furnaces.

Chambers of smaller size at the sides of the furnaces will operate, but experience proves that a considerable body of air is required to attain the best effects. I am aware that the commingling of atmospheric air with coal gases for drying purposes is not new, but I am not aware that air and coal gas have been combined in dry kilns at the place and by the means herein shown.

The main flue E above the furnace is, as shown in figures 1 and 4, narrower than the furnace chamber U; it may be of the same width, but for economy it is made as shown.

This flue E extends up to a deflector, K K^1, which keeps the grain from getting into the flue in its descent into the hopper L L^1. G represents a partition in the upper part of the flue E, so arranged that gases and air may pass into either part of the two-part hopper L L^1, and that heat may be excluded wholly from either part of the hopper. The partition G extends entirely across the hopper, as shown in figure 1; and in order that cold air may be conducted into either part of the two-part hopper, cold air pipes, J J^1, are made to communicate with the main flue and the interior of the kiln; and in order that cold air may be admitted to or shut off from either part of the hopper, and consequently admitted to or shut off from either drying-room above, a valve, D, figures 1, 3, and 4, of a size to close either of the branch flues F F^1, is hung to the partition G, and a chain, H, is attached to the same for convenience of operating it at the front or rear of the furnaces. The partition G unites with the partition G^1, which separates the two drying chambers; and over the hopper L L^1 are placed girders, O^2, for the main support of the drying-floor, and transversely across these girders are placed ribs, *p*, on which the trays *m* are placed. The said trays are constructed as follows, that is to say: each tray consists of a substantial longitudinal frame; transversely across and between the sides *n* of the trays are placed bearers, *f*, at such distance apart as to assist in supporting wire-cloth *m* above; and longitudinally between the ends n^1 are placed bearers, *c c*, which are "gained" into other bearers, *f f*, to form a floor of suitable strength to support the grain or malt to be dried and also persons who are to work thereon. This wire-cloth should be of such a mesh as to allow a free passage

passage of air, while preventing the passage of the grain through the same. The wire is brought over the sides and ends of the frames $n\,n^1$, and when the said frames are of wood is secured by screws, staples, or nails. If plates, r, of metal be secured to the sides and ends of the frame, where the wire-cloth is brought over them, the plates will prevent the detaching of the wire by use. The upper edges of all parts of the tray coming in contact with the wire should be made thin, to avoid obstructing the passage of air and gas.

Longitudinally to the underside of the trays, and at about one-quarter of the distance inward from the sides, are secured bearers, $v\,v$, which are fixtures to the trays, and serve more especially as bearings on which each tray may be more readily dumped, inasmuch as the bearers support the tray more centrally than if the same had a bearing throughout its entire width on the ribs p. The trays so made are to be long enough to extend across the drying room, the length of the room determining the number of trays to be used. For convenience the width of the said trays should not exceed about twenty inches or two feet, and they should fit so closely together as to prevent the falling of the grain between them. It is sometimes desirable to dump the contents of an upper floor into a lower floor, and thus utilize the heat on two or more sets of floors. In this case the height of the building would have to be increased to afford space for the duplicate floors. The meshes of the wire should decrease in size on each sub-floor as the grain or malt shrinks in drying. The furnaces are provided with doors, as shown in figures 3 and 4, by means of which coal can be supplied to the said furnaces.

The substance to be dried is spread on the trays m, which trays are to cover the area over the hopper $L\,L^1$, and the valve D is to have a vertical position, so as to admit gases and air through the branches $F\,F^1$ of the flue E, to dry the grain on the trays m. Wire gauze or tiles may be used instead of trays if so preferred.

When grain or malt on one side of the partition G^1, as for instance in the room T^1, is dried, the valve D is brought to one side of the flue E, as shown at figure 3, to shut the gases off from that room, the cold air inlet J^1 is then opened and the room T^1 cooled for workmen to enter and dump the trays m one by one till their contents are discharged into the hopper at L^1.

The drying process continuing in the opposite compartment T, the contents of the other floor are discharged in the same manner after bringing the valve D to the position shown in dotted lines D^1, figure 3. The malt or grain is to be taken from the hoppers by means of spouts, $M\,M^1$.

Having thus fully described the said invention as communicated to me by my foreign correspondent, and the manner of performing the same, I wish it understood that I claim—

First—The combination of the furnace or furnaces with the air-chambers, the main flue and its branches, the hopper, and the deflector, as and for the purpose specified.

Second—The two-part drying-room, the two-part hopper, the two-part flue, the cold air pipes, the cut-off, and the furnaces, whereby the drying process is continued in one drying-room while the other is being emptied, as above specified.

Third—The trays, consisting of the frames, the transverse bearers, the longitudinal bearers, and the wire-cloth attached to the said frames, as above set forth.

Fourth—In a kiln for drying malt or similar materials, the parts or devices constituting the above specified improvements, arranged and combined as shown in the accompanying drawing, and operating as and for the purposes set forth.

In witness whereof I, the said Samuel Burston, have hereto set my hand and seal, this twenty-ninth day of December, one thousand eight hundred and seventy-nine.

Witness— SAML. BURSTON.

W. S. BAYSTON,
Clerk to EDWD. WATERS, Patent Agent, Melbourne.

This is the specification referred to in the annexed Letters of Registration granted to Samuel Burston, this second day of April, A.D. 1880.

AUGUSTUS LOFTUS.

REPORT.

Sir, Sydney, 7 February, 1880.

We do ourselves the honor to state that we are of opinion that Letters of Registration may be issued in favour of Mr. Samuel Burston, for "Improvements in and relating to Kilns for drying Malt, Grain, and other materials," in accordance with the Petition, specification, drawings, and claim transmitted for our report under your blank cover communication of the 27th ultimo, No. 698.

We have, &c.,
GOTHER K. MANN.
ROBERT G. MASSIE.

The Principal Under Secretary.

[Drawings—one sheet.]

[8/3]

FIG.1.

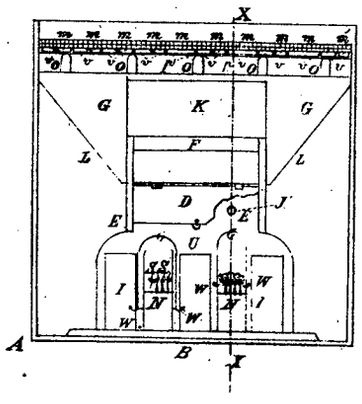

FIG.2.

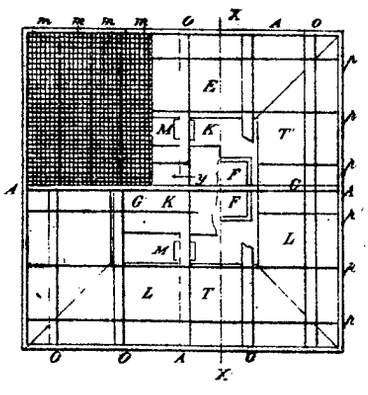

FIG.3.

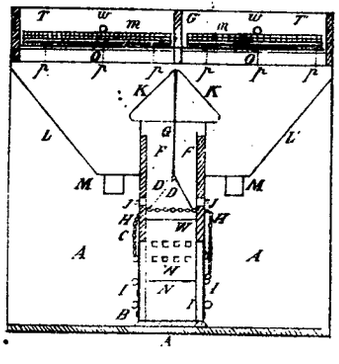

FIG.4.

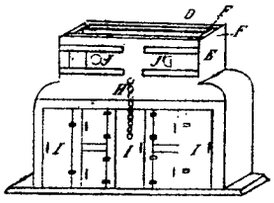

FIG.5.

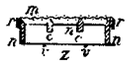

FIG.6.

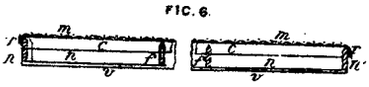

This is the sheet of drawings referred to in the annexed Letters of Registration granted to Samuel Burston this second day of April AD 1880.

(Sig: 357) "Augustus Loftus"

PHOTO-LITHOGRAPHED AT THE GOVT. PRINTING OFFICE SYDNEY, NEW SOUTH WALES.

A.D. 1880, 6*th April*. No. 814.

SELBY'S IMPROVED GAS-BURNER.

LETTERS OF REGISTRATION to Arthur Selby, for an improved Gas-burner.

[Registered on the 6th day of April, 1880, in pursuance of the Act 16 Vic. No. 24.]

BY His Excellency the Right Honorable Sir Augustus William Frederick Spencer Loftus (commonly called Lord Augustus Loftus), Knight Grand Cross of the Most Honorable Order of the Bath, a Member of Her Majesty's Most Honorable Privy Council, Governor and Commander-in-Chief of the Colony of New South Wales and its Dependencies.

TO ALL TO WHOM THESE PRESENTS SHALL COME, greeting:

WHEREAS Arthur Selby, of Paddington, in the Colony of New South Wales, plumber and gas-fitter, hath by his Petition humbly represented to me that he is the author or designer of a certain invention or improvement in manufactures, that is to say, of an invention of an "Improved Gas-burner," which is more particularly described in the specification and the sheet of drawings which are hereunto annexed; and that he, the said Petitioner, hath deposited with the Honorable the Treasurer of the said Colony of New South Wales the sum of Twenty Pounds sterling, for defraying the expense of granting these Letters of Registration, as required by the Act of Council, sixteenth Victoria, number twenty-four; and hath humbly prayed that I would be pleased to grant Letters of Registration, whereby the exclusive enjoyment and advantage of the said invention or improvement might be secured to him for a period of fourteen years: And I, being willing to give encouragement to all inventions and improvements in the arts or manufactures which may be for the public good, and having received a report favourable to the prayer of the said Petition, from competent persons appointed by me to examine and consider the matters stated therein and to report thereon for my information, am pleased, with the advice of the Executive Council, and in exercise of the power and authority given to me by the said Act of Council, to grant, and do by these Letters of Registration grant unto the said Arthur Selby, his executors, administrators, and assigns, the exclusive enjoyment and advantage of the said invention or improvement, for and during the term of fourteen years from the date hereof; to have, hold, and exercise unto the said Arthur Selby, his executors, administrators, and assigns, the exclusive enjoyment and advantage thereof, for and during and unto the full end and term of fourteen years from the date of these presents next and immediately ensuing, and fully to be complete and ended: Provided always, that if the said Arthur Selby shall not, within three days after the granting of these Letters of Registration, register the same in the proper office in the Supreme Court, at Sydney, in the said Colony of New South Wales, then these Letters of Registration, and all advantages whatsoever hereby granted, shall cease and become void.

In witness whereof, I have hereunto set my sign manual, and have caused the present Letters of Registration to be sealed with the seal of the said Colony of New South Wales, at Government House, Sydney, in New South Wales, this sixth day of April, in the year of our Lord one thousand eight hundred and eighty.

[L.S.] AUGUSTUS LOFTUS.

SPECIFICATION

A.D. 1880. No. 814.

Selby's Improved Gas-burner.

SPECIFICATION of Selby's Improved Gas-burner.

My invention consists of an "Improved Gas-burner," and its novelty is the combination of two or more gas-burners which separately give a flat flame, in such a way that the flames from these burners are combined and form a flat flame of increased size, it having been found that such a combination of flames gives a more intense light than that given by the same number of burners with separate flames.

In order that my invention may be more distinctly understood I will now proceed to refer to the annexed drawings, whereon similar letters indicate similar parts wherever they occur.

Figure 1 shows side elevation and plan of two burners arranged according to this invention.

Figure 2 shows side elevation and plan of three of same.

Figure 3 shows side elevation and plan of four of same; *a a* are the gas-burners shown in section in figure 2; *b* is a plate of any suitable shape with passages for distributing the gas to the different burners—it is here shown in section; *c* is the combined flame—the dotted line *d d* shows the side view thereof.

Having now described my invention, the manner of its operation is as follows:—

The gas is admitted to the burners *a a* through the passages in plate *b*, and is lighted above the burners in the ordinary way; the several flames then uniting form one large flat flame.

Having now described my invention and the manner of its operation, I claim as my invention:—The combination of two or more burners which separately give a flat flame in such a way that the resulting flame is a flat one of increased size and intensity.

ARTHUR SELBY.

This is the specification referred to in the annexed Letters of Registration granted to Arthur Selby, this sixth day of April, A.D. 1880.

AUGUSTUS LOFTUS.

REPORT.

Sydney, 10 March, 1880.

Sir,

The application of Mr. Arthur Selby for Letters of Registration for an "Improved Gas-burner," having been referred to us, we have examined the specification and drawings accompanying the same, and have now the honor to report that we see no objection to the issue of Letters of Registration as prayed for.

We have, &c.,

J. SMITH.

E. C. CRACKNELL.

The Principal Under Secretary.

[Drawings—one sheet.]

SELBY'S IMPROVED GAS BURNER

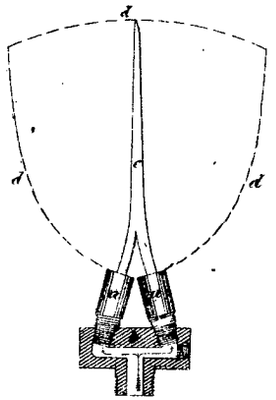

FIG 1.

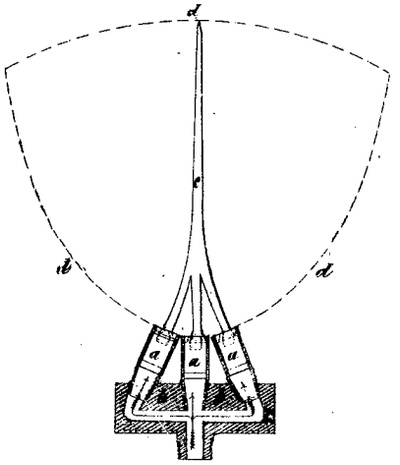

FIG 2.

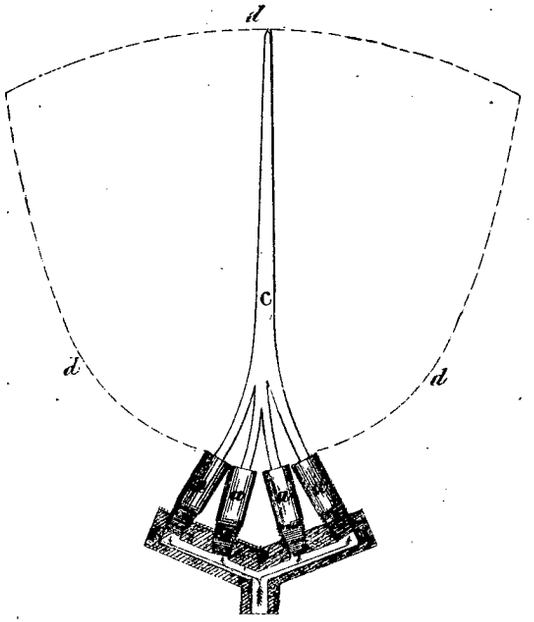

FIG 3.

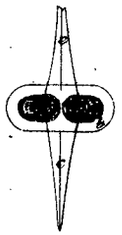

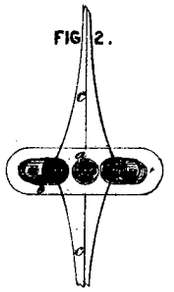

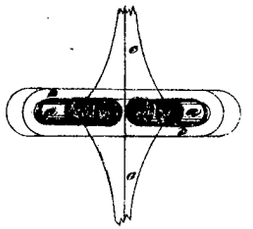

This is the Sheet of Drawings referred to in the annexed Letters of Registration, granted to Arthur Selby, this sixth day of April, A.D. 1880.

Augustus Loftus.

(SIG. 357-)

A.D. 1880, 15*th April*. No. 815.

IMPROVEMENTS IN BINDING APPARATUS FOR ATTACHMENT TO REAPING MACHINES.

LETTERS OF REGISTRATION to William Humble and Ward Nicholson, for Improvements in Binding Apparatus for attachment to Reaping Machines.

[Registered on the 16th day of April, 1880, in pursuance of the Act 16 Vic. No. 24.]

BY HIS EXCELLENCY THE RIGHT HONORABLE SIR AUGUSTUS WILLIAM FREDERICK SPENCER LOFTUS (commonly called LORD AUGUSTUS LOFTUS), Knight Grand Cross of the Most Honorable Order of the Bath, a Member of Her Majesty's Most Honorable Privy Council, Governor and Commander-in-Chief of the Colony of New South Wales and its Dependencies.

TO ALL TO WHOM THESE PRESENTS SHALL COME, greeting :

WHEREAS WILLIAM HUMBLE and WARD NICHOLSON, both of the Vulcan Foundry, Little Malop-street, Geelong, in the Colony of Victoria, engineers, have by their Petition humbly represented to me that they are the assignees of James Ferrier, junior, of Salt Pans, near Coleraine, in the said Colony of Victoria, farmer, who is the author or designer of a certain invention or improvement in manufactures, that is to say, of an invention entitled "Improvements in Binding Apparatus for attachment to Reaping Machines," which is more particularly described in the specification, marked A, and the two sheets of drawings, marked B and C, respectively, which are hereunto annexed ; and that they, the said Petitioners, have deposited with the Honorable the Treasurer of the said Colony of New South Wales the sum of Twenty Pounds sterling, for defraying the expense of granting these Letters of Registration, as required by the Act of Council, sixteenth Victoria, number twenty-four ; and have humbly prayed that I would be pleased to grant Letters of Registration, whereby the exclusive enjoyment and advantage of the said invention or improvement might be secured to them for a period of fourteen years : And I, being willing to give encouragement to all inventions and improvements in the arts or manufactures which may be for the public good, and having received a report favourable to the prayer of the said Petition, from competent persons appointed by me to examine and consider the matters stated therein and to report thereon for my information, am pleased, with the advice of the Executive Council, and in exercise of the power and authority given to me by the said Act of Council, to grant, and do by these Letters of Registration grant unto the said William Humble and Ward Nicholson, their executors, administrators, and assigns, the exclusive enjoyment and advantage of the said invention or improvement, for and during the term of fourteen years from the date hereof ; to have, hold, and exercise unto the said William Humble and Ward Nicholson, their executors, administrators, and assigns, the exclusive enjoyment and advantage thereof, for and during and unto the full end and term of fourteen years from the date of these presents next and immediately ensuing, and fully to be complete and ended : Provided always, that if the said William Humble and Ward Nicholson shall not, within three days after the granting of these Letters of Registration, register the same in the proper office in the Supreme Court, at Sydney, in the said Colony of New South Wales, then these Letters of Registration, and all advantages whatsoever hereby granted, shall cease and become void.

In witness whereof, I have hereunto set my sign manual, and have caused the present Letters of Registration to be sealed with the seal of the said Colony of New South Wales, at Government House, Sydney, in New South Wales, this fifteenth day of April, in the year of our Lord one thousand eight hundred and eighty.

[L.S.] AUGUSTUS LOFTUS.

Improvements in Binding Apparatus for attachment to Reaping Machines.

A.

SPECIFICATION of WILLIAM HUMBLE and WARD NICHOLSON, both of the Vulcan Foundry, Little Malop-street, Geelong, in the Colony of Victoria, engineers, the assignees of James Ferrier, junior, of Salt Pans, near Coleraine, in the said Colony, farmer, the inventor of an invention entitled "Improvements in Binding Apparatus for attachment to Reaping Machines."

THIS invention consists of certain improvements in apparatus for binding the crop cut or reaped by reaping machines into bundles or sheaves with string bands, and for tying the ends of such bands into knots. It is applicable to any kind of machine in which provision is made for supplying the cut crop in regular order to the table of our apparatus.

In our invention provision is made first, for gathering the stalks supplied to it into a bundle; second, for compressing such bundle or sheaf where it is to be bound; third, for carrying the string tightly around it; fourth, for tying the ends in a knot and cutting the string; and fifth, for holding the foremost end of the string for the next bundle.

Our apparatus can be attached to any convenient part of the reaping machine, but we think the best place for it is on the near side of the draught wheel, and therefore we have shown it in that position in our drawings. It consists essentially of a standard, the upper part of which carries the gathering, compressing, and string-carrying contrivances, whilst the lower part carries the knot-tying and the string-cutting and holding contrivances. This standard has a to and fro motion imparted to it, during a considerable part of which the operating contrivances are motionless.

Our gathering, compressing, and string-carrying contrivances consist essentially of three curved arms; one of which assists in gathering the sheaf and also carries the string around it; a second one, which is carried by the first, guides the string into its proper position relatively to the knot-tying machinery; whilst the third is the compressing arm.

Our knot-tying contrivances consist essentially of a twisting hook, a looper, and a puller. The first and last are hooks of different shape to each other, the latter being the smaller; and the looper is inside but eccentric to the hollow spindle of the twister. Our cutting and holding contrivances consist of a cutter and a holder, the latter being for the purpose of holding the end of the string whilst the sheaf is being formed and bound. All these contrivances for tying the knot and cutting and holding the string have an intermittent motion which is imparted to them by a rack and certain cam edges on the underside of a metal plate which does not move with them but simply rises out of and falls into position at the proper time.

Referring now to the drawings hereto attached. Figure 1 shows side elevation of our apparatus, with so much of the reaping machine shown as is necessary for the purposes of this specification. In this view the gathering and string-carrying arm, as well as the compressing and string-guiding arms, are at their topmost positions as seen when they are approaching the reaping machine and are just about to close on the stuff with which it has been supplied thereby. Figure 2 shows side elevation of the same after it has reached the end of its stroke, compressed the sheaf, surrounded it with string, and is on its return motion away from the reaper, at the point where the knot-tying machinery comes into play. Figure 3 shows plan of our apparatus as seen in figure 1. Figure 4 shows back elevation thereof. Figure 5 shows one practicable arrangement for carrying motion from the main wheel of the reaper to our apparatus. Figure 6 shows top view of our knot-tying contrivances and the box which contains them. Figure 7, end view of same. Figure 8 shows plan of the metal plate on the underside of which are the cam edges and the rack which impart motion to the knot-tying contrivances. Figures 9 and 10 are cross-sections of the same on the lines opposite to which they are placed. Figure 11 shows plan of the holder when it is elongated so as to let the string run free. Figure 11^a is side view of same. Figure 12 shows side and face view of the twister, looper, and puller, before the twister has commenced to work. Figure 13 shows the looper protruding to its full extent, whilst figures 14, 15, 16, and 17 show similar views at half a turn, a whole turn, one-and-a-half turns, and two turns respectively. Figure 18 showing same as figure 17, after the puller has pulled in the ends of the string through the loop formed on the string, whilst figure 19 shows the twister, hook, and knotted string free from each other.

A is the standard which is set on a box, F, supported at one end on a tube, F^1, and at the other on a roller, F^2. This tube slides to and fro in its bearings F^3. This standard is worked to and fro by means of rod A^2, connected to crank-arm A^3 whose shaft A^4 is driven by toothed wheel A^5, operated by pinion A^6, which receives motion from the main draught wheel A^7 of the reaping machine, through intermediate gearing A^8, as seen in figure 5. On the end of that arm of the standard which is marked A^9 is a stud or pin on which swivels a forked or Y-shaped arm or tumbler, B, in the fork of which is a recess, B^1. At the end of the upper prong of this fork is a connecting rod, B^2, whose length is adjustable by a screw-thread at either end as shown. This rod is connected to a crank arm, B^3, on one end of tubular shaft B^4, on the other end of which is the string-carrying arm B^5. This arm is formed of two sides with a space between them, so as to admit of a secondary or subsidiary string-guiding arm B^6, which is pivoted at B^7, and connected at its stem to a bracket, B^8, by means of spring B^9. B^{10} is the string, which passes round a small sheave at the end of the arm B^5 to the spool B^{11}, which is held in tension in the usual manner. B^{12} is a friction roller carried on the projecting end of pin on crank arm A^3, and travels over face of tumbler B. In figure 1 this friction roller has just arrived at the point where it commences to travel down the face of said tumbler. When it arrives at and falls into the recess B^1, it carries the tumbler B with it for about an eighth of a revolution. This has the effect of pulling forward the rods B^2 and C^7, which bring with them the arms B^5 and C (arm B^6 being carried with arm B^5) until they arrive at the position shown in figure 2. The arms B^5 and C are then at rest (except that they are moving back with the standard A), until the friction roller again runs up into the recess B^1, where for an exactly similar period as before it carries the tumbler B with it, imparting an exactly opposite motion to all the arms to that which it previously gave, thus opening them out again to the positions shown in figure 1. C is the compressing arm pivoted at C^1, on a rim, C^2, supported from shaft C^3, by means of arms C^4. C^5 is a spring to allow for the different sizes of the sheaves to be bound. C^6 is a crank arm on shaft C^3, and to which is connected rod C^7 (adjustable like B^2), and attached to arm C^8, which is a part of the same casting as Y-shaped tumbler B. C^9 is a stud

which

which acts on the face of the tail end C^{11} of subsidiary arm B^6. D D are tappet pieces affixed one on either side of base of standard A, in line of its motion. D^1 are studs on crank arms D^2, keyed to short spindles D^3, which carry eccentrics D^4, and which spindles are supported in bearings, D^5, on the frame of the machine. D^6 are eccentric bearings for eccentrics D^4, attached to the underside of cam plate D^7. On the underside of this cam plate are also the various cam edges, &c., for giving motion to the knot-tying contrivances as hereinafter more specifically described.

Referring more especially to sheet 2 of our drawings, which relates almost exclusively to the contrivances for tying the knot :—

E is the twister hook riveted to spindle E^1, the shape of which in cross-section at this point is shown at figure 20. Its shape in cross-section at other points is shown in figures 21 and 22. E^2 is spur pinion, through which rotation is imparted to the twister spindle and hook at the proper time. Cast with this pinion is a slotted projection, E^3, like a screw-head, the slot in which receives a corresponding projection, E^4, on a locking bolt, E^5, for the purpose of preventing any motion of the spindle E^1, except at the required time. E^6 is a collar on bolt E^5, against which the spring E^7 presses. E^8 are bearings for said bolt cast solid on the bottom of the box F. E^9 is friction roller which receives motion when it comes in contact with cam edge E^{10}, on the underside of cam plate D^7. E^{11} is a rack (also on the underside of said cam plate) which gears into pinion E^2, after the bolt E^5 has been withdrawn by the action of cam edge E^{10}.

G is the looper, the operative end of which is tubular, as shown in longitudinal section in figure 23, and is surrounded by the twister hook through which it works. Its stern G^1 is shown in cross-section in figure 24, and extends to the point 2 in figure 6. G^2 is a collar (shown in figures 6 and 23), riveted to stem G^1, and G^3 are clutch rings fastened to the thrust bar G^4, which gives the thrust or forward motion to the looper, the rotatory motion of which is imparted by the twister spindle E^1. G^5 is a friction roller for giving the necessary thrust to the bar G^4, when it comes in contact with cam edge G^6, on underside of cam plate D^7. G^7 is a spring for giving the backward thrust to said bar G^4. G^8 are bearings cast solid on the bottom of the box F.

H is the hooked puller (face and side views of which are shown in figures 26 and 27) which passes through the tubular part of the looper. H^1 is the puller stem, which consists of a flat blade enlarged at its end H^2, where a collar, H^3, is attached, which collar works between clutch rings H^4 in exactly the same way as is shown in figure 23. Said rings are connected to thrust bar H^5, which passes through bearings H^6, cast solid on the bottom and side of the box F. H^7 is friction roller for giving the necessary thrust to the thrust bar H^5, when it comes in contact with cam edge H^8, on underside of cam plate D^7. H^9 is another cam edge, against which said friction roller H^7 subsequently works for giving the necessary positive backward pull to the hooked puller in order to complete the knot, the spring H^{10} always exercising a retarding influence on the forward thrust of the puller, and also bringing it back to its normal stationary position.

The string-holder consists of two bars, one above the other, the under one J being the longer and thrust bar, and the upper and shorter one, J^1, only partaking of a part of the motion of the under one. The under one, J, has a chisel point, J^2, and the metal is set up so as to form a stop at J^3 (see side view figure 11^a), against which the upper holding bar J^1 presses the string when it is being held; a tooth, J^4, with a corresponding recess being for the purpose of giving additional security to its grip of the string. J^5 and J^6 are square collars fastened to the upper holding bar J^1, the lower bar being free to move through them. The forward motion to the upper bar is given solely through the spring J^7, acting against collar J^6; said spring being caused to act by the stud J^8 acting against said spring when the bar J is thrust forward by the friction roller J^9 coming in contact with cam edge J^{10} on the underside of cam plate D^7. When the bar J has thrust forward the upper bar J^1 until the projection J^{11} on collar J^6 comes in contact with stop J^{12} fastened to side of box F, the upper bar is stopped, the lower one continuing its motion until it reaches the position shown in figure 11, when the string of the bound sheaf is released (although the string is not yet cut). The spring J^{13} then comes into play, giving the return motion to both holding bars, the upper one not returning so far as the lower one, but being stopped by leather stop J^{14}, so that the lower one closes against the upper one, thus gripping the string.

K is the knife affixed to the collar J^5, and is adjustable in collar J^6, by set screw K^1, so that it moves simultaneously with the upper bar J^1. When the return motion of the lower bar J overtakes that of the upper bar J^1 it brings the string with some amount of impetus suddenly against the knife, which cuts it, thus releasing the bound sheaf. On the end of the lower bar J is cam edge K^2, which by suddenly coming to the edge of the cam edge J^{10}, gives the sudden backward impetus just referred to.

In figure 8, the four dotted circles in the upper part of the figure show the positions of the friction rollers, which they represent when they are in the positions shown in full lines in figure 6; and the four dotted circles in the lower part of the figure show the same rollers when they have arrived at the position shown in dotted lines in figure 6.

L L are guides, one at the side and the other below the twister hook, for the purpose of keeping the string in its proper position with relation to the twister hook and string-holder.

It will thus be seen that by simply giving a to and fro motion to our standard A, the whole of our apparatus is operated. It can be attached to any convenient part of and in any convenient way to a reaper or harvester, and the speed can be regulated at will by the size of the drive wheels as is well known; and its operation can be made intermittent, if the crop is light and thin, or for any other reason, by throwing the driving pinion in and out of gear with the machine by an ordinary clutch connection.

Having thus described the nature of our invention, and the manner of performing same, we would have it understood that what we claim as new and of our invention is,—

First—The combination of the standard A, connecting rod A^2, and crank-arm A^3, for giving the reciprocating motion to the standard A.

Second—The combination with such parts of those contrivances marked B, B^1, B^2, B^3, B^4, and B^{12}, for the purpose of working the arm B^5.

Third—The combination with the parts marked A, A^2, A^3, B, B^1, and B^{12} of those contrivances marked C, C^2, C^3, C^4, C^5, C^6, C^7, and C^8, for the purpose of working the arm C.

Fourth—

Fourth—The combination of parts B to B^5 inclusive, and also B^{12}, with those marked B^6, B^8, B^9, and C^9 for the purpose of working the string guide arm B^6.

Fifth—The combination of the parts marked D, D^1, D^2, D^3, D^4, D^6, and D^7, for the purpose of alternately lifting and lowering the cam-plate D^7.

Sixth—The peculiar construction of the twister hook E, and its spindle E^1, as shown in figures 6, 20, 21, and 22.

Seventh—The combination with such twister hook and its spindle of parts marked E^2, E^3, E^4, E^5, E^6, E^7, E^9, E^{10}, and E^{11}, for the purpose of working it.

Eighth—The peculiar construction of the looper G, and its stem G^1, as shown in figures 6, 23, and 24.

Ninth—The combination with such looper and its stem of the parts marked G^2, G^3, G^4, G^5, G^6, and G^7, for the purpose of working such looper.

Tenth—The peculiar construction of the hooked puller H, and its stem H^1, as shown in figures 6, 26, and 27.

Eleventh—The combination with such hooked puller and its stem of parts marked H^3, H^4, H^5, H^7, H^8, H^9, and H^{10}, for the purpose of working such hooked puller.

Twelfth—The peculiar construction of the string-holder J and J^1, as shown in figures 6, 7, 11, and 11^a.

Thirteenth—The combination with such string-holder of the parts marked J^5 to J^{14} inclusive, for the purpose of working such string-holder.

Fourteenth—The combination of the knife K with the parts marked J^5, J^6, K^1, K^2, and J^{10}, for the purpose of working such knife.

Fifteenth—The combination of all the parts of our apparatus in the manner and for the purpose herein described and explained.

In witness whereof we, the said William Humble and Ward Nicholson, have hereto set our hands and seals, this third day of February, one thousand eight hundred and eighty.

WILLIAM HUMBLE.
WARD NICHOLSON.

This is the specification, marked A, referred to in the annexed Letters of Registration granted to William Humble and Ward Nicholson, this fifteenth day of April, A.D. 1880.

AUGUSTUS LOFTUS.

REPORT.

Sydney, 16 March, 1880.

Sir,

We do ourselves the honor to state that we see no objection to the issue of Letters of Registration in favour of Messrs. William Humble and Ward Nicholson, for "Improvements in Binding Apparatus for attachment to Reaping Machines," in accordance with their Petition, specification, drawings, and claim transmitted for our report, under your blank cover communication of the 16th ultimo, No. 1,424.

We have, &c.,
GOTHER K. MANN.
ROBERT G. MASSIE.

The Principal Under Secretary.

[Drawings—two sheets.]

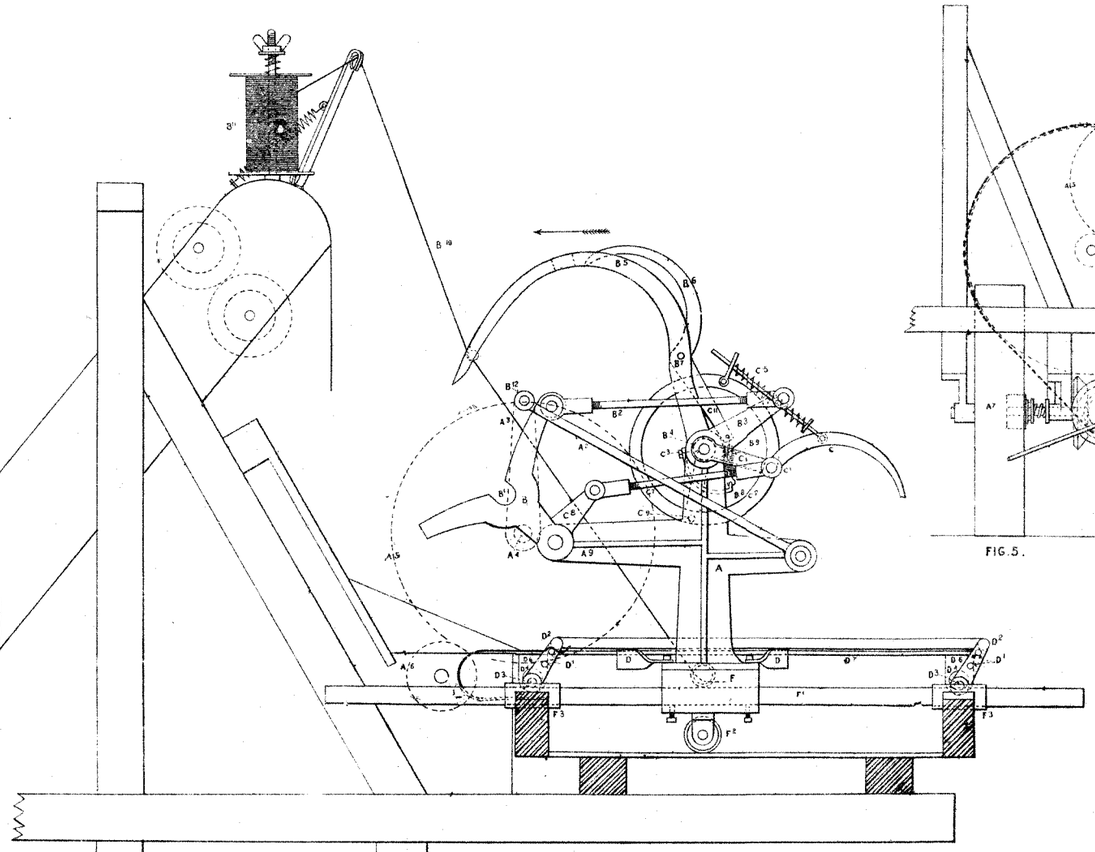

FIG 1.

FIG. 5.

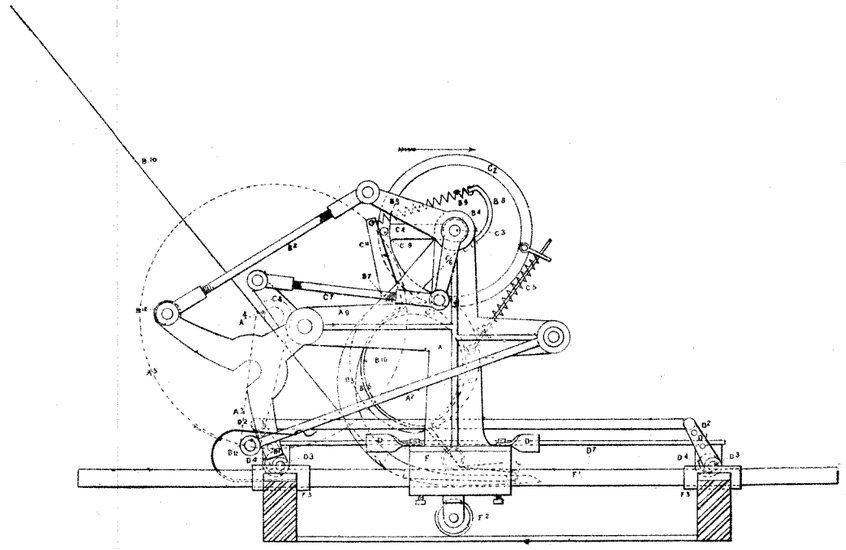

FIG. 2.

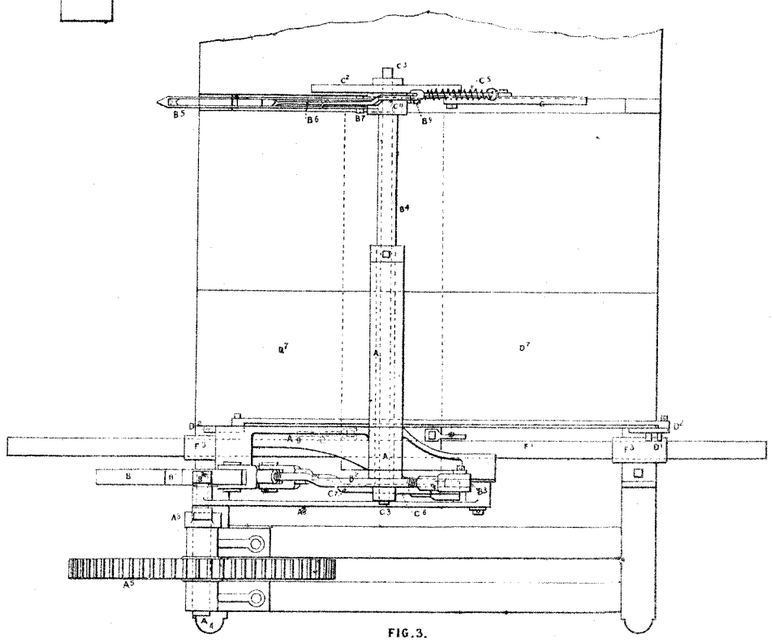

FIG. 3.

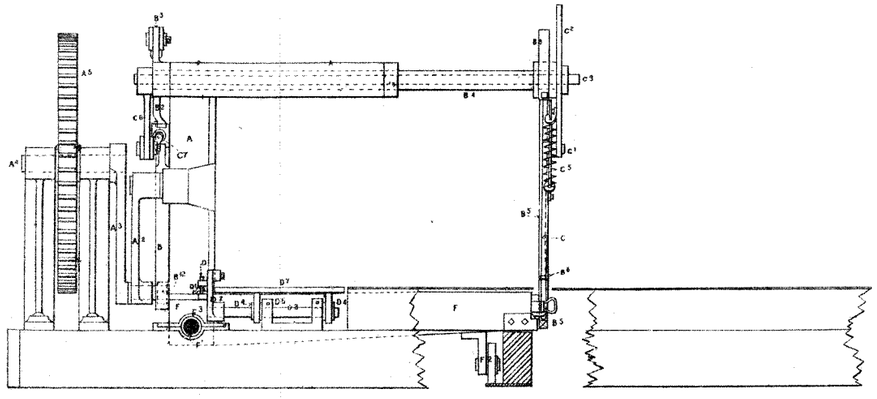

FIG. 4.

This is the Sheet of Drawings marked "B" referred to in the annexed Letters of Registration granted to William Rumble and Ward Nicholson this fifteenth day of April A.D. 1860.

(Sig. 357.)

Augustus Loftus

PHOTO-LITHOGRAPHED AT THE GOVT. PRINTING OFFICE, SYDNEY, NEW SOUTH WALES.

C.

[815]

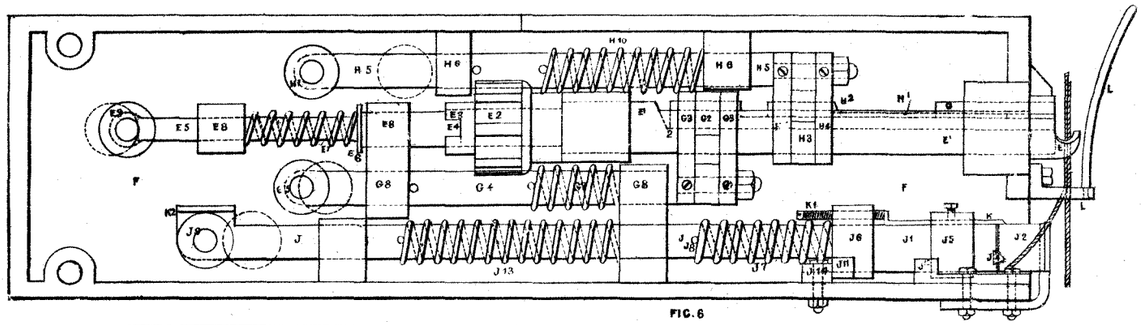

FIG. 6

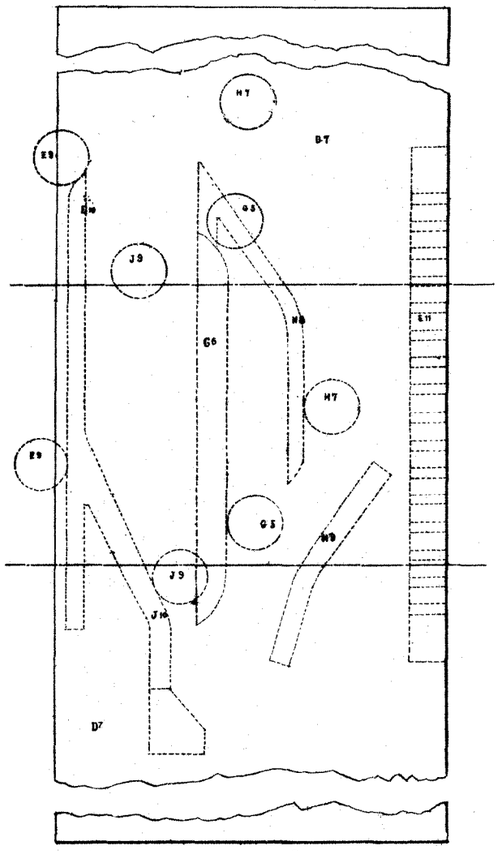

FIG. 8.

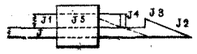

FIG. 11. A

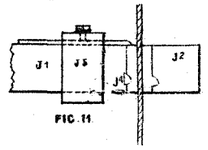

FIG. 11

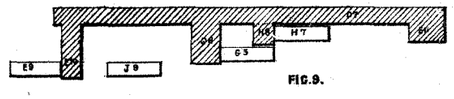

FIG. 9.

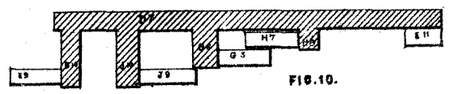

FIG. 10.

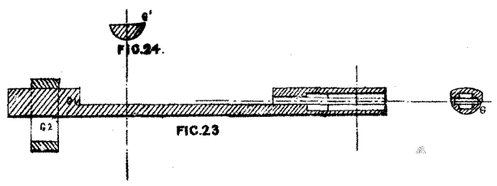

FIG. 23

FIG. 24.

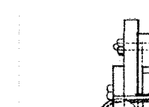

FIG. 7.

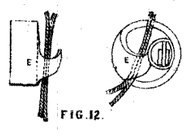

FIG. 12.

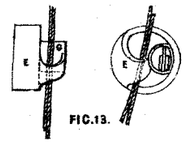

FIG. 13.

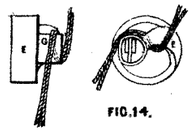

FIG. 14.

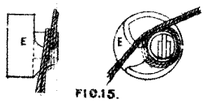

FIG. 15.

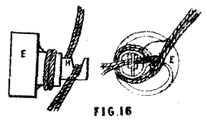

FIG. 16

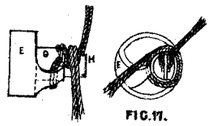

FIG. 17.

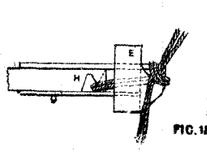

FIG. 18.



FIG. 19.



FIG. 20. FIG. 21. FIG. 22.

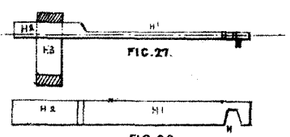

FIG. 27.

FIG. 26.

PHOTO-LITHOGRAPHED AT THE GOVT. PRINTING OFFICE,
SYDNEY, NEW SOUTH WALES.

This is the Sheet of Drawings marked "C" referred to in the annexed Letters of Registration granted to William Humble and Ward Nicholson this fifteenth day of April — AD 1880.

(Sig. 357-)

" Augustus Loftus

A.D. 1880, 15*th April*. No. 816.

IMPROVEMENTS IN THE CONSTRUCTION OF SHIPS OR VESSELS WITH TWIN PROPELLERS.

LETTERS OF REGISTRATION to Zachariah Oram and Philip Brunner Grove, for Improvements in and relating to the construction of Ships or Vessels with Twin Propellers.

[Registered on the 16th day of April, 1880, in pursuance of the Act 16 Vic. No. 24.]

BY His Excellency the Right Honorable Sir Augustus William Frederick Spencer Loftus (commonly called Lord Augustus Loftus), Knight Grand Cross of the Most Honorable Order of the Bath, a Member of Her Majesty's Most Honorable Privy Council, Governor and Commander-in-Chief of the Colony of New South Wales and its Dependencies.

TO ALL TO WHOM THESE PRESENTS SHALL COME, greeting:

WHEREAS Zachariah Oram, doctor of medicine, and Philip Brunner Grove, hardware merchant, both of Philadelphia, in Pennsylvania, one of the United States of America, have by their Petition humbly represented to me that they are the authors or designers of a certain invention or improvement in manufactures, that is to say, of an invention entitled "Improvements in and relating to the construction of Ships or Vessels with Twin Propellers," which is more particularly described in the specification and the sheet of drawings which are hereunto annexed; and that they, the said Petitioners, have deposited with the Honorable the Treasurer of the said Colony of New South Wales the sum of Twenty Pounds sterling, for defraying the expense of granting these Letters of Registration, as required by the Act of Council, sixteenth Victoria, number twenty-four; and have humbly prayed that I would be pleased to grant Letters of Registration, whereby the exclusive enjoyment and advantage of the said invention or improvement might be secured to them for a period of fourteen years: And I, being willing to give encouragement to all inventions and improvements in the arts or manufactures which may be for the public good, and having received a report favourable to the prayer of the said Petition, from competent persons appointed by me to examine and consider the matters stated therein and to report thereon for my information, am pleased, with the advice of the Executive Council, and in exercise of the power and authority given to me by the said Act of Council, to grant, and do by these Letters of Registration grant unto the said Zachariah Oram and Philip Brunner Grove, their executors, administrators, and assigns, the exclusive enjoyment and advantage of the said invention or improvement, for and during the term of fourteen years from the date hereof; to have, hold, and exercise unto the said Zachariah Oram and Philip Brunner Grove, their executors, administrators, and assigns, the exclusive enjoyment and advantage thereof, for and during and unto the full end and term of fourteen years from the date of these presents next and immediately ensuing, and fully to be complete and ended: Provided always, that if the said Zachariah Oram and Philip Brunner Grove shall not, within three days after the granting of these Letters of Registration, register the same in the proper office in the Supreme Court, at Sydney, in the said Colony of New South Wales, then these Letters of Registration, and all advantages whatsoever hereby granted, shall cease and become void.

In witness whereof, I have hereunto set my sign manual, and have caused the present Letters of Registration to be sealed with the seal of the said Colony of New South Wales, at Government House, in New South Wales, this fifteenth day of April, in the year of our Lord one thousand eight hundred and eighty.

[L.S.] AUGUSTUS LOFTUS.

Improvements in the construction of Ships or Vessels with Twin Propellers.

SPECIFICATION of ZACHARIAH ORAM, Doctor of Medicine, and PHILIP BRUNNER GROVE, hardware merchant, both of Philadelphia, in Pennsylvania, one of the United States of America, for an invention entitled, "Improvements in and relating to the construction of Ships or Vessels with Twin Propellers."

IN order to prevent the backwater against the propeller which occurs when it is placed in the usual manner at the stern of the vessel, thereby producing what is technically called negative slip, "causing the ship to move faster than the screw is capable of propelling it, hence the dragging of the screw which exhausts more than half the force of the engines or propelling power employed," we employ twin propellers, one at each side of the vessel in front of the midships, and consequently out of the reach of the backwater. Another object of the arrangement is to prevent what is technically called the racing of the screw (or being thrown out of the water in riding over heavy waves when placed at the stern), it being impossible for it to leave the water under any conditions when placed in front of the midships, and hence the danger of the blades being broken in the sudden force against the water by the descent of the stern to its normal position is entirely prevented. For the purpose of drawing the water from the front end of the vessel as much as practicable, we arrange the shafts of the propellers parallel or nearly so with the sides of that part of the vessel, employing right and left hand screws in such a manner as to throw the water outwards from the keel; and for the purpose of causing a lifting of the bow in a sufficient degree to permit it to pass freely over the water, we arrange the shafts of the propellers on an upward angle from the latter so that the blades shall have such a downward pressure upon the water as to give the desired lifting action.

In the accompanying drawings which make a part of this specification, figure 1 is a plan view of the front end of a vessel having twin propellers, the deck being left off to show more clearly the parts which relate to our invention; figure 2 is a vertical longitudinal section at the line *x x* of figure 1; figure 3 is a side elevation; figure 4 is a front elevation; figure 5 is a cross section at the line *z z* of figures 1 and 3.

Like letters of reference in all the figures indicate the same parts.

A represents the front end of a vessel which is provided with twin-screw propellers B B, on the rear ends of the revolving shafts C C, as seen in figures 3 and 5.

The propeller on the starboard side has the left-hand screw, and the one on the larboard side a right-hand screw, so as to throw the water outward from the keel.

The journals on the front ends of the shafts having their bearings in the pedestals D, and the journals on the rear ends in the stuffing-boxes E E that are situated in the housings F F. The pedestals have flanges, *a a*, that are secured to the inside of the bottom of the vessel by means of the tapered bolts *b b*, which pass through the keel, and are riveted at their inner ends over the flanges which have curved countersunk holes, as seen in figure 2, thus avoiding sharp corners at each end of the bolts, to prevent their being broken by sudden jars.

The housings have flanges, C, which are secured to the bottom and sides of the vessel by means of bolts or rivets. For the purpose of producing a lifting of the bow of the vessel sufficiently to cause it to pass freely over the water, and thereby facilitate the speed of the vessel as much as possible, these shafts have an upward inclination from their rear ends, whereby the blades of the propellers have a downward as well as a backward pressure. In the drawings the angle is eighteen degrees, but we do not confine ourselves to that angle, as a variation either way may be made as may be desired or found by experiment to be most advisable.

The shafts are on an angle from the longitudinal central line of the vessel, divergent from their front ends, so as to be parallel, or nearly so, with the sides of the front end of the vessel, so as to cause the propellers in their action upon the water to draw it away from the bow to give an easy passage of the vessel.

The propeller shafts CC are provided with thrust blocks, HH, which have flanges, *d*, that are riveted to the hull. The caps of the thurst blocks are omitted in the drawings. I is a driving shaft which is connected to the motive power, not seen in the drawings. This shaft is connected with the propeller shafts C C by means of the immediate shaft J, and the train of gear wheels KK K^1K^1 and K^2K^2. The wheels K^1K^1 may be movable on the shaft J by means of a shifter, so as to be readily thrown in and out of gear with the wheels K^2K^2, to give practicability to disconnecting either propeller to facilitate the turning of the vessel when desired.

In order to get the propellers as much under the sides of the vessel as practicable, they are located in recesses, L, one of which is shown in figure 3. These recesses are in clamshell form and have a gradual termination backwards, as seen in said figure, to give a free passage to the water as it is thrown outwards and backwards by the blades of the propellers. The housings FF are represented in the drawings as forming the front sides of the recesses, the remaining part being formed in the side plates. We contemplate, however, making the whole of the recesses by a suitable shaping of the plates, and connecting the stuffing-boxes EE with the latter. In this case the housings may be dispensed with.

We claim as our invention,—

First—The combination of twin propellers with the sides of a marine or other vessel in front of the midships, their shafts being parallel, or nearly so, with the sides contiguous to them, and the propellers having right and left hand blades for throwing the water outwards from the keel, the said shafts having their front ends elevated more or less from the horizontal line of the centre of the propellers or not as desired, substantially in the manner and for the purpose set forth.

Second—The combination of twin propellers with the sides of a marine or other vessel, the shafts being parallel, or nearly so, with the contiguous sides of the vessel, and on an acute angle from the parallel of the keel of the vessel, and on a descending acute angle from the main shaft, substantially as and for the purpose set forth.

Third—

Third—The combination of twin propellers with clamshell shaped recesses in the sides of a vessel, the said recesses having a gradual backward termination with the sides of the vessel, to give an easy outward and backward flow of the water from the propellers, substantially as set forth.

This is the specification referred to in the annexed Letters of Registration granted to Zachariah Oram and Philip Brunner Grove, this fifteenth day of April, A.D. 1880.

AUGUSTUS LOFTUS.

REPORT.

Sir,

Sydney, 3 March, 1880.

We do ourselves the honor to report, in reply to your blank cover communication of the 23rd ultimo, 80/1,530, with reference to Messrs. Z. Oram and P. B. Grove's application for Letters of Registration for an invention for "Improvements in and relating to construction of Ships or Vessels with Twin Propellers," that we are of opinion that Letters of Registration may be granted to the Petitioners, in terms of their specification, drawings, &c.

We have, &c.,

E. O. MORIARTY.

FRANCIS HIXSON.

The Principal Under Secretary.

[Drawings—one sheet.]

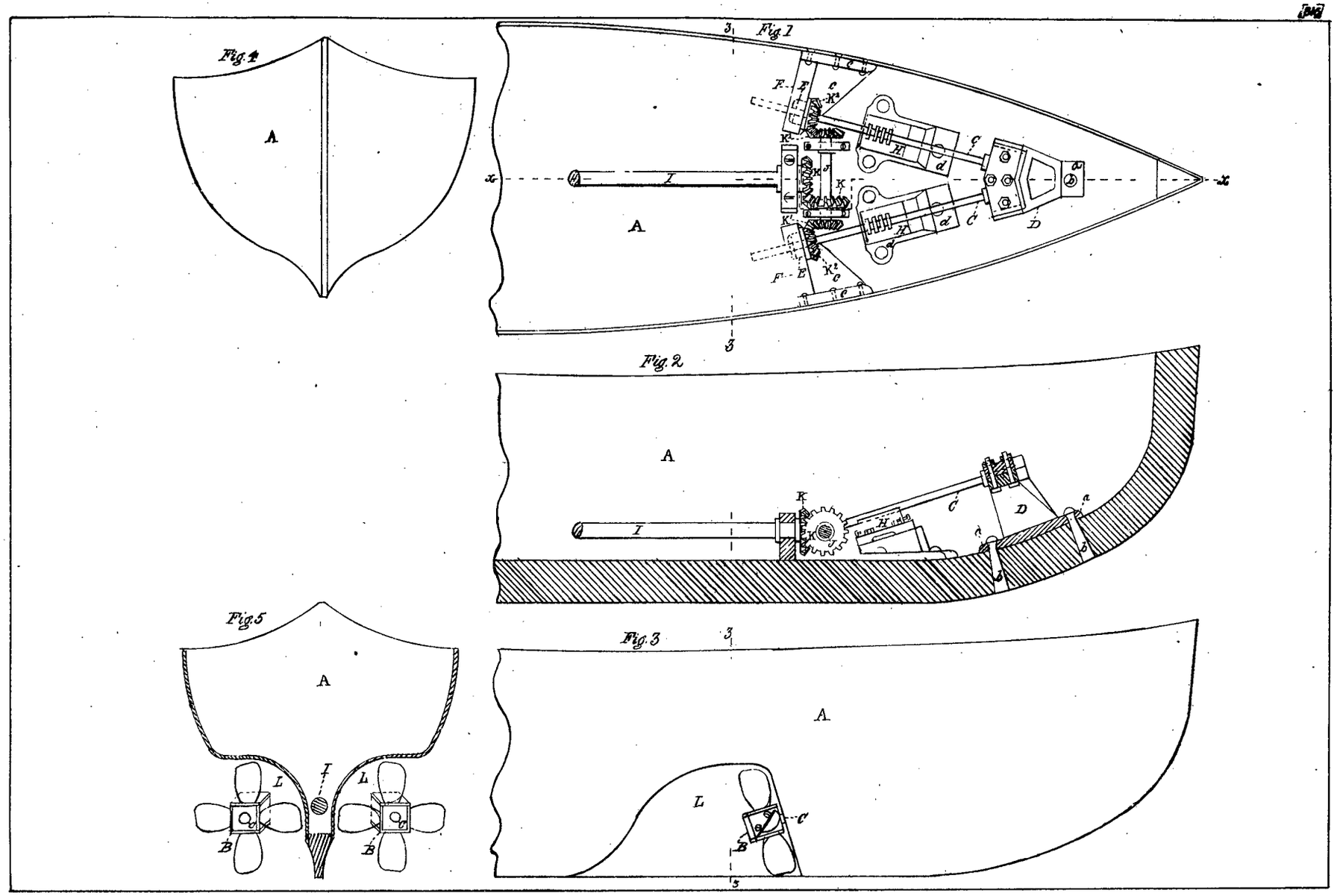

This is the Sheet of Drawings referred to in the annexed Letters of Registration granted to Zachariah Oram and Philip Brunner Grove this Sixteenth day of April - - AD 1880.

Augustus Loftus

PHOTO-LITHOGRAPHED AT THE GOVT. PRINTING OFFICE
SYDNEY NEW SOUTH WALES

(Sig. 357)

A.D. 1880, 15*th April*. No. 817.

GRAEPEL'S PATENT STEAM-POWER STRIPPING MACHINE.

LETTERS OF REGISTRATION to Hugo Graepel, for a Machine for stripping Wheat or other grain, driven by steam power.

[Registered on the 16th day of April, 1880, in pursuance of the Act 16 Vic. No. 24.]

BY His Excellency the Right Honorable Sir Augustus William Frederick Spencer Loftus (commonly called Lord Augustus Loftus), Knight Grand Cross of the Most Honorable Order of the Bath, a Member of Her Majesty's Most Honorable Privy Council, Governor and Commander-in-Chief of the Colony of New South Wales and its Dependencies.

TO ALL TO WHOM THESE PRESENTS SHALL COME, greeting:

WHEREAS Hugo Graepel, of Gainsborough, in the county of Lincoln, England, hath by his Petition humbly represented to me that he is the author or designer of a certain invention or improvement in manufactures, that is to say, of an invention of a "Machine for stripping Wheat or other grain, driven by steam power, and to be styled Graepel's Patent Steam-power Stripping Machine," which is more particularly described in the specification and the sheet of drawings which are hereunto annexed; and that he, the said Petitioner, hath deposited with the Honorable the Treasurer of the said Colony of New South Wales the sum of Twenty Pounds sterling, for defraying the expense of granting these Letters of Registration, as required by the Act of Council, sixteenth Victoria, number twenty-four; and hath humbly prayed that I would be pleased to grant Letters of Registration, whereby the exclusive enjoyment and advantage of the said invention or improvement might be secured to him for a period of fourteen years: And I, being willing to give encouragement to all inventions and improvements in the arts or manufactures which may be for the public good, and having received a report favourable to the prayer of the said Petition, from competent persons appointed by me to examine and consider the matters stated therein and to report thereon for my information, am pleased, with the advice of the Executive Council, and in exercise of the power and authority given to me by the said Act of Council, to grant, and do by these Letters of Registration grant unto the said Hugo Graepel, his executors, administrators, and assigns, the exclusive enjoyment and advantage of the said invention or improvement, for and during the term of fourteen years from the date hereof; to have, hold, and exercise unto the said Hugo Graepel, his executors, administrators, and assigns, the exclusive enjoyment and advantage thereof, for and during and unto the full end and term of fourteen years from the date of these presents next and immediately ensuing, and fully to be complete and ended: Provided always, that if the said Hugo Graepel shall not, within three days after the granting of these Letters of Registration, register the same in the proper office in the Supreme Court, at Sydney, in the said Colony of New South Wales, then these Letters of Registration, and all advantages whatsoever hereby granted, shall cease and become void.

In witness whereof, I have hereunto set my sign manual, and have caused the present Letters of Registration to be sealed with the seal of the said Colony of New South Wales, at Government House, Sydney, in New South Wales, this fifteenth day of April, in the year of our Lord one thousand eight hundred and eighty.

[L.S.] AUGUSTUS LOFTUS.

SPECIFICATION.

Graepel's Patent Steam-power Stripping Machine.

SPECIFICATION.

TO ALL TO WHOM THESE PRESENTS SHALL COME: I, HUGO GRAEPEL, of Gainsborough, in the county of Lincoln, England, send greeting:

WHEREAS I am desirous of obtaining Letters of Registration for securing unto me Her Majesty's special license that I, my executors, administrators, and assigns, or such others as I or they should or may at any time agree with, and no others, should and lawfully might from time to time, and at all times during the term of fourteen years, to be computed from the day on which this instrument is left at the office of the Colonial Secretary, at Sydney, make, use, exercise, and vend within the Colony of New South Wales, an invention for "Improvements in the method of driving stripping machines"; and in order to obtain the said Letters of Registration I must, by an instrument in writing under my hand, particularly describe and ascertain the nature of the said invention, and in what manner the same is to be performed.

Now know ye that I, the said Hugo Graepel, do hereby declare the nature of the said invention, and the manner performed, to be particularly described and ascertained in and by the following statement and description, reference being had to the drawings hereunto annexed and to the letters and figures marked thereon, which indicate the parts therein referred to and herein particularly explained, that is to say:—

My invention consists chiefly in the application of a steam-engine as motive power for the stripping machine.

Referring to the drawings hereunto attached, figure 1 shows side elevation of the steam-engine and stripping machine, both being placed on a wrought iron frame; figure 2 shows the machine looked at from top; figure 3 shows the position of the engine crank-shaft and counter-shaft, and the cog-wheels, fly-wheel, and driving pulley; figure 4 shows the foresteerage, looked at from top; and figure 5 shows a vertical section of the foresteerage wheels taken in centre.

In figure 1 the engine and boiler and stripping machine are both placed on a wrought iron plate; but I may in some instances prefer to use a girder or an angle-iron frame to place the engine and stripping machine on; or I may attach the frame to the side of the engine and boiler instead of putting the engine and boiler on the frame. The boiler *a* is shown in the drawing of the vertical type, as taking the least room. An ash-pan, *b*, is provided underneath the boiler, with the flap doors *c* and *d*. This ash-pan is perfectly closed at the bottom, and water 2″ or 3″ high is to be poured in before the engine commences to work, to prevent hot ashes flying out. The flap-door *c* is intended to be open while at work, to admit air into the fire-box, and all round the back end of the boiler (*i.e.*, where the fire-box is), and along the sides of the boiler, the foundation plate is enclosed by a sheet iron fence 2′ 6″ high, to prevent the wind blowing into the ash-pan. The flap-door *d* is not intended to be open while at work, but it is provided only for the purpose of removing the ashes after working hours. The fuel is admitted into the fire-box by means of the apparatus *e*. This apparatus has a flap door, *f*, on opening which the fuel is placed between the plates *g* and *h*, and after the door *f* has been closed again, the fuel is pushed into the fire-box by means of the handle and rod *i*, thus the flames cannot pass out of the fire-door. Small holes are provided in the plate *g*, to allow a rod to pass through for stirring up the fuel. The chimney *k* is provided with a wire-netting spark-catcher, *l*, and the exhaust pipe *m* is so arranged that the steam does not go straight up the chimney, but it is forced sideways by a cone, *n*; thus the sparks will, on their passage in the chimney, come in contact with the steam and be extinguished. The engine is of the vertical type, built on a wrought iron frame. The pinions *p* on the crank-shaft are gearing into cog-wheels, *q*, on the travelling wheels, thus transmitting the propelling power. Levers are provided to throw the pinions *p* out of gear, and the engine is fitted with link motion reversing gear, for backward and forward motion of the machine, and for facilitating turning on the corners of the fields.

A steering gear, *w*, is provided, acting on the under gear and fore wheels.

The stripping machine is built independent of the engine, and placed on the general frame.

In figure 2 is A the boiler, B the chimney, C the seat for the safety-valves, D the steam pipe, E the exhaust pipe, F the cylinder, G the water tank, H the coal bunker, I the fire-door, K the crank-shaft, L the fly-wheel, M gearing to drive the counter-shaft; *p p* are pinions to drive travelling wheels, *q q* are cog-wheels fixed to the travelling wheels, O is the pulley driving the drum, O′ is the drum pulley, *r* is the stripping machine.

In figure 3, *x* is the crank-shaft, *y* the fly-wheel, *z* cog-wheel driving the counter-shaft, C′ pinion on crank-shaft, *c′* is the driving pulley, *p p* are cog-wheels driving the travelling wheels.

Figure 4 shows the steerage top view. Figure 5 is a section of the steerage gear.

Having thus described the nature of my invention and the manner in which the same is to be performed, I claim—

1. The application of a foundation plate or foundation frame carrying the steam-engine and boiler and stripping machine.
2. Or the application of a plate or angle-iron or girder frame fixed to the side of the steam. engine and boiler, and carrying the stripping machine.
3. The outside fuel-box with closing door, and the shifting plates.
4. The arrangement of the ash-pan, having the opening door towards the top, and being enclosed by a fence, and being closed towards the outside of the enclosing fence.

And I do hereby, for myself, my heirs, administrators, executors, and assigns, covenant with Her Majesty, Her Heirs and Successors, that I believe the said invention to be a new invention as to the public use and exercise thereof, and that I do not know or believe that any other person than myself is the true and first inventor of the said invention, and that I will not deposit these presents at the office of the Colonial Secretary, in Sydney, with any such knowledge or belief as last aforesaid.

In witness whereof I have hereunto set my hand and seal, this second day of February, one thousand eight hundred and eighty.

HUGO GRAEPEL.

As witness to the signature of the said Hugo Graepel—
C. PHILLIPS.

This

Graepel's Patent Steam-power Stripping Machine.

This is the specification referred to in the annexed Letters of Registration granted to Hugo Graepel, this fifteenth day of April, A.D. 1880.

AUGUSTUS LOFTUS.

REPORTS.

Sir, Sydney, 22 January, 1880.

We do ourselves the honor to state, in reply to your B.C. communication of the 15th instant, No. 396, transmitting for our report Mr. Hugo Graepel's specification and drawings of a "Steam-power Stripping Machine," and Petition for the registration of the same, that we are of opinion that the claim, as set forth in the specification, is inadmissible in its present form, inasmuch as it purposes to secure the exclusive right to steam power for stripping machines.

We have, &c.,
GOTHER K. MANN.
ROBERT G. MASSIE

The Principal Under Secretary.

Sir, Sydney, 2 March, 1880.

In reply to your blank cover communication of the 19th ultimo, re-transmitting Mr. Hugo Graepel's Petition for the registration of a "Steam-power Stripping Machine," we do ourselves the honor to report that we see no objection to the prayer of the Petition being granted, in terms of Mr. Graepel's revised specification, drawings, and claim.

We have, &c.,
GOTHER K. MANN.
ROBERT G. MASSIE.

The Principal Under Secretary.

[Drawings—one sheet.]

Hugo Graepel's Steam Power Stripping Machine.

Fig. 5.

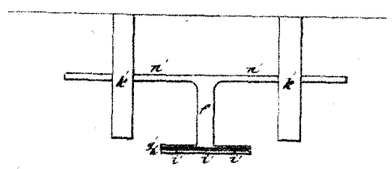

Fig. 4.

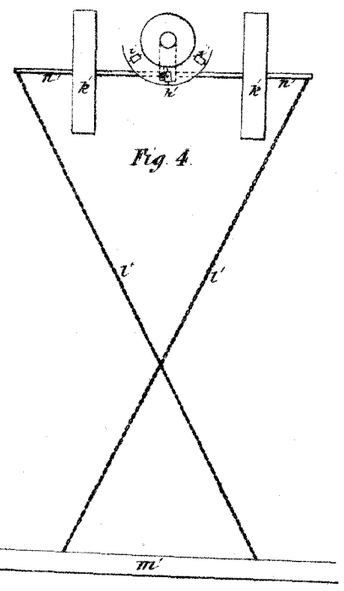

Fig. 3.

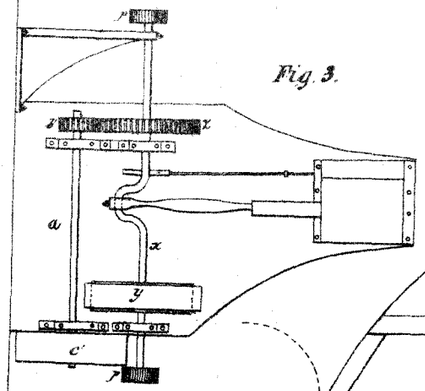

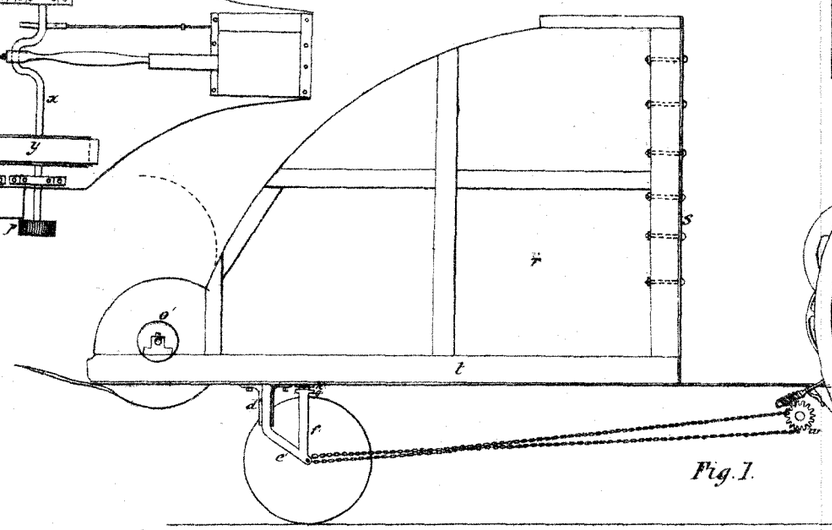

Fig. 1.

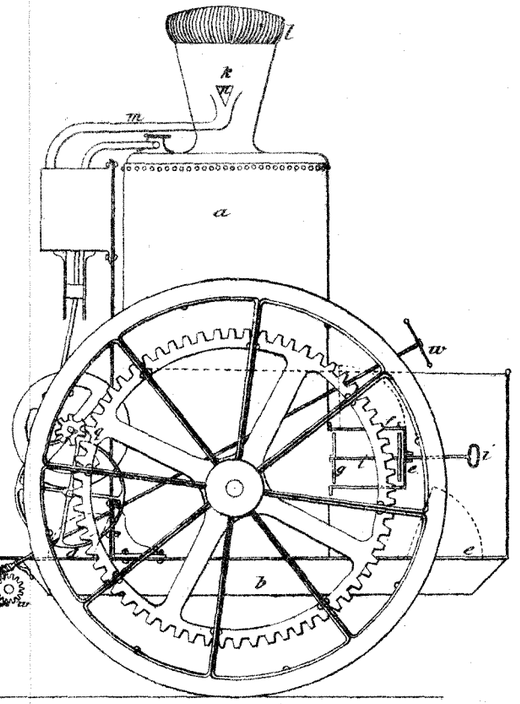

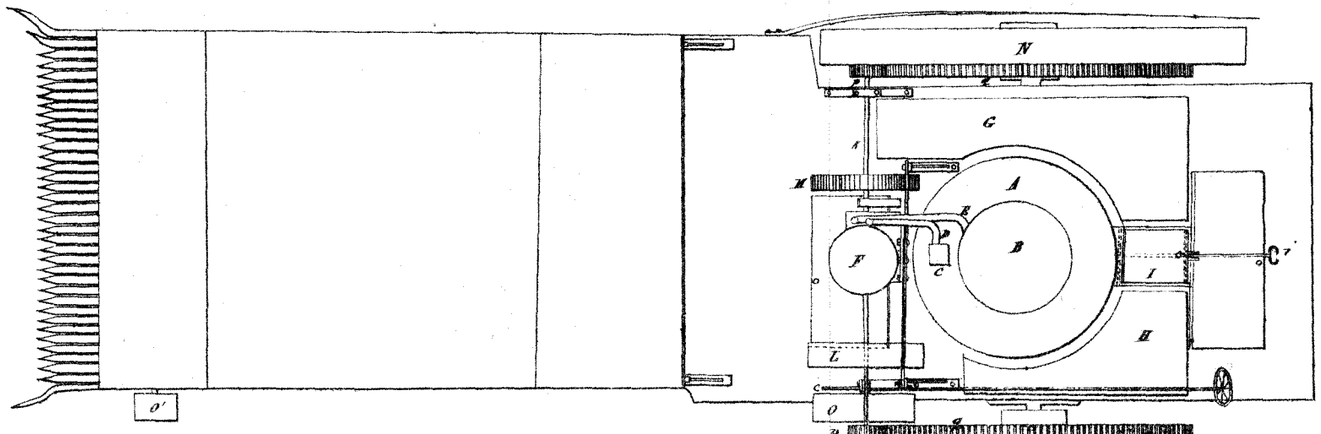

Fig. 2.

This is the Sheet of Drawings referred to in the annexed Letters of Registration granted to Hugo Graepel, this fifteenth day of April, A.D. 1880.

Augustus Loftus.

PHOTO-LITHOGRAPHED AT THE GOVT. PRINTING OFFICE, SYDNEY, NEW SOUTH WALES.

A.D. 1880, 15*th April.* No. 818.

IMPROVEMENTS IN MACHINERY FOR EXCAVATING AND REMOVING EARTH.

LETTERS OF REGISTRATION to David Lindsay Waugh, for Improvements in Machinery for excavating and removing earth.

[Registered on the 16th day of April, 1880, in pursuance of the Act 16 Vic. No. 24.]

BY His Excellency the Right Honorable Sir Augustus William Frederick Spencer Loftus (commonly called Lord Augustus Loftus), Knight Grand Cross of the Most Honorable Order of the Bath, a Member of Her Majesty's Most Honorable Privy Council, Governor and Commander-in-Chief of the Colony of New South Wales and its Dependencies.

TO ALL TO WHOM THESE PRESENTS SHALL COME, greeting:

WHEREAS David Lindsay Waugh, of Sydney, in the Colony of New South Wales, engineer, hath by his Petition humbly represented to me that he is the author or designer of a certain invention or improvement in manufactures, that is to say, of an invention of "Improvements in Machinery for excavating and removing earth," which is more particularly described in the specification and the sheet of drawings which are hereunto annexed; and that he, the said Petitioner, hath deposited with the Honorable the Treasurer of the said Colony of New South Wales the sum of Twenty Pounds sterling, for defraying the expense of granting these Letters of Registration, as required by the Act of Council, sixteenth Victoria, number twenty-four; and hath humbly prayed that I would be pleased to grant Letters of Registration, whereby the exclusive enjoyment and advantage of the said invention or improvement might be secured to him for a period of fourteen years: And I, being willing to give encouragement to all inventions and improvements in the arts or manufactures which may be for the public good, and having received a report favourable to the prayer of the said Petition, from competent persons appointed by me to examine and consider the matters stated therein and to report thereon for my information, am pleased, with the advice of the Executive Council, and in exercise of the power and authority given to me by the said Act of Council, to grant, and do by these Letters of Registration grant unto the said David Lindsay Waugh, his executors, administrators, and assigns, the exclusive enjoyment and advantage of the said invention or improvement, for and during the term of fourteen years from the date hereof; to have, hold, and exercise unto the said David Lindsay Waugh, his executors, administrators, and assigns, the exclusive enjoyment and advantage thereof, for and during and unto the full end and term of fourteen years from the date of these presents next and immediately ensuing, and fully to be complete and ended: Provided always, that if the said David Lindsay Waugh shall not, within three days after the granting of these Letters of Registration, register the same in the proper office in the Supreme Court, at Sydney, in the said Colony of New South Wales, then these Letters of Registration, and all advantages whatsoever hereby granted, shall cease and become void.

In witness whereof, I have hereunto set my sign manual, and have caused the present Letters of Registration to be sealed with the seal of the said Colony of New South Wales, at Government House, Sydney, in New South Wales, this fifteenth day of April, in the year of our Lord one thousand eight hundred and eighty.

[L.S.] AUGUSTUS LOFTUS.

Improvements in Machinery for excavating and removing earth.

SPECIFICATION.

My invention consists of certain improvements in machinery for excavating and removing earthy matter, and relates, first, to the excavating implement; second, to the framing which carries it; and third, to the contrivances by which it is operated.

My excavating implement is made in the form of a long narrow trough or scoop, with the edge at one end made sharp for cutting the earth. It is fitted with a sliding cutter on the front of the lower end for cutting off the earth at the bottom when the scoop has cut down the sides to the desired depth, the whole implement constructed so that by it a long block of earth may be cut out without breaking or crushing it, and thus obviating the loss of power due to this cause in other machines; and also so that the block of earth may be conveyed away in the body of the implement.

My framing is so made as to admit of both lateral and backward and forward movement, and so as to be readily adjusted, and thus direct the excavating implement to precisely the right spot.

My contrivances for operating such implement consist, first, of ropes or chains conducted over suitable grooved pulleys supported on the frame. The ends of these cords are connected to the excavating implement, and the whole constructed so as to admit of the implement being forced into the ground, drawn up again, and travelled along the frame; second, of guides for tipping the implement and causing it to assume an upright position just as it is descending to excavate, and to return to the horizontal position during the reverse operation; third, of a guide and rings for turning the loaded implement upside down where the excavated earth is to be deposited.

These machines may be fitted with two, three, or more of these excavating implements working side by side.

In order however that my invention may be distinctly understood, I will now proceed to refer to the drawings hereto attached, and whereon similar letters indicate similar parts where they occur. Figure 1 shows the side elevation of a machine constructed according to this invention; figure 2, front view thereof; figure 3, plan of same; figures 4 and 5 are sections at *a b* and *c d* respectively in figure 1; figures 6 and 7 show respectively side elevation and plan of a double machine; A is the framing of the excavating end of the machine, and rests on horizontal framing B, which in its turn rests on horizontal framing C; D D are grooved pulleys near the top of the framing A; E E are grooved pulleys near the bottom of the framing A; they are connected together and have spur wheel, E, secured to the side of one of them; F F are guide sheaves on the same shaft as the pulleys DD; G is a horizontal shaft having a screwed thread and a keyway cut its whole length, and fitted with a sliding pinion geared into the spur wheel E′; H is another horizontal shaft, on the ends of which are keyed two pinions, I I; K K are racks; L is a loose pinion on the shaft G, and connected by a clutch Z; M is the excavating or cutting implement, on front of which at lower end is sliding cutter N, which is fitted so as to slide in and out across the end; O is a frame of any convenient length, the outer end being supported on wheels O′ and the inner end on the framing A; it may be supported by intermediate trestles; P P are ropes or chains, one end of each is connected to the cutter N, then passed under the rollers YY at the bottom of the cutting implement M, then up over the pulleys DD, then conducted along the frame O over the pulleys RR to the end of it, and then conducted back over the pulleys R′R′ and over the sheaves FF and round the pulleys EE, and up the excavator M, then over the rollers YY on the top, down the front of it, and connected to the cutter N; Q is a curved guide for tipping the excavator; SS are circular rings which partially rotate on their axis; T is a curved guide for overturning the laden excavator; U is a finger or projection on the face of the excavator; X is a nut hinged to the frame A, and fitted so that it can be dropped into gear with the shaft G.

Having now described the various parts of my apparatus, the manner of its operation is as follows: The machine being placed in position on the ground that it is desired to excavate, and the excavator M with the cutter N on it in the position shown on the drawing, the machine is put in motion by the application of power to the shaft G; this causes the wheel EE to revolve, and it, by means of the ropes or chains PP, forces the excavator into the ground and causes it to cut out a slice or block in its descent; when it has reached the desired depth the motion of the shaft G is reversed—this causes the ropes and chains PP to draw in the cutter N at the bottom of the excavator, cutting off the earth at the bottom and preventing it from falling out. When the cutter N is drawn completely in, the ropes or chains PP draw up the excavator M until the projection U comes in contact with the guide Q; this causes the spade to cant and gradually assume a horizontal position on the rollers RR as shown by the dotted lines MM; the ropes PP continuing to move, the excavator M is carried along the elevated frame O as far as the discharging contrivance T, the excavator during this travelling operation being carried on the rollers RR which carry the cords PP; the motion of the cords being continued, the projection U on the excavator M comes in contact with the guide T, which cause the excavator M and the rings SSS to turn, and this allows the earth to fall out of the excavator; when the earth is discharged the motion of the cords PP is reversed, and the excavator carried back to the frame A; this reversal causes the cords to draw the cutter N back to its original position, and the guide T also returns the excavator to its original position; when it again reaches the frame A the projection U comes in contact with the guide Q, and causes it again to assume the position shown on the drawing; the motion being continued, the excavator is again forced into the ground and the operation continued as before described. During the travelling operation the frame A is moved along so as to present a new surface for the excavator to act on; this is done by dropping the nut X into the screw on the shaft G; this screw then forces the frame A along, and when it has been moved as far as is desired the nut is drawn out of gear; also when the face has been cut as wide as the frame C will permit or it is desired, the clutch Z is put into gear with the pinion L; this communicates motion to the shaft H and the wheels I I, and the wheels I I acting on the racks KK move the frames B and A back for a new series of cuts, the clutch Z being pulled out of gear when the frames have been moved back as far as is required; when the frame B is moved back as far as the frame C will permit, the frame C is drawn back by suitable means, and the operations continued as often as is desired. If the ground is soft or it is necessary, I support the outer end of the frame C on legs reaching to the bottom of the excavation.

In

Improvements in Machinery for excavating and removing earth.

In the form of my apparatus shown in figures 6 and 7, I dispense with frames B and C, and substitute a frame mounted on wheels and secured to the frame A, and travel the apparatus along the face of the cutter, so that it presents a fresh piece to the excavator for each dig, and when it has moved as far as the side of the cutting it is moved back so as to take a new line of cuts, and the operation is again continued.

The elevated frame O is also moved with the frame A, support at the other end being on wheels, to allow of this, as the motion of this form of the apparatus may be gradually backwards, and the earth is discharged between the two supports. The frame O is made high enough to pass over the discharged earth, and in this way I can build dams to any height by raising the frame O to the required height.

In these figures 6 and 7 I also show the application of a pair of these spades, in which I use the return cords from one spade as the carrying out cords of the other, by leading the lines PP round suitable pulleys at each end of the framing, and I arrange the spades so that during the digging operation with the one the other is discharging, and while one is travelling outwards loaded the other is travelling inwards empty. I also combine two or more of these spades in one apparatus if desirable, and work them either in pairs or singly. For communicating the motion to the cords PP, I can if I desire use a drum and pass the cords one or more turns round it and apply power to the drum; also, if I desire, I can dispense with the elevated frame O, and simply suspend the excavator from the cords, which I carry over sheaves fixed, or on trestles spaced suitable distances apart. I can also, if I desire, empty the excavator by discharging it out of the end instead of the front. Or in railway cuttings or elsewhere I can use an excavator open in front and simply cut the earthy matter and allow it to fall forward, or I can lift it as high as I desire and allow it to fall directly, or with the intervention of a shoot, and convey it away in trucks or on an endless band, or by other suitable means. I can also, if I desire, use rack friction or other suitable gear for forcing the excavator directly down, or for raising it.

Having now described my invention and the manner in which its operations are performed, I do not bind myself to the size or materials of which any part of it may be made or manufactured, but what I claim as my invention is—

First—The excavating of earthy matter in long blocks by means of one or more long scoops, which are forced directly down into the earth, substantially in the manner and by the means herein described.

Second—The peculiar construction of the body of this cutting implement or scoop M, similar to a long trough or box, so as to contain the excavated block, and having the sliding cutter N fitted to it, for the purposes and arranged as herein described and explained.

Third—The combination and arrangement of the tipping contrivance for canting the excavator just before its descent, and of the overturning contrivance T and S, with the framing O, substantially as herein described and explained.

Fourth—The combination and arrangement of the frames A, B, and C, in the manner and for the purposes herein described and explained.

DAVID LINDSAY WAUGH.

This is the specification referred to in the annexed Letters of Registration granted to David Lindsay Waugh, this fifteenth day of April, A.D. 1880.

AUGUSTUS LOFTUS.

REPORT.

Sir, Sydney, 19 March, 1880.

We do ourselves the honor to state that we see no objection to the issue of Letters of Registration in favour of Mr. David Lindsay Waugh, for "Improvements in Machinery for excavating and removing earth," in conformity with Mr. Waugh's Petition, specification, drawings, and claim, transmitted for our report, under your blank cover communication of the 25th ultimo, No. 1,591.

We have, &c.,
GOTHER K. MANN.
JAMES BARNET.

The Principal Under Secretary.

[Drawings—one sheet.]

No. 819.

[Assignment of No. 242A. See page 73 of Return of 21 June, 1872.]

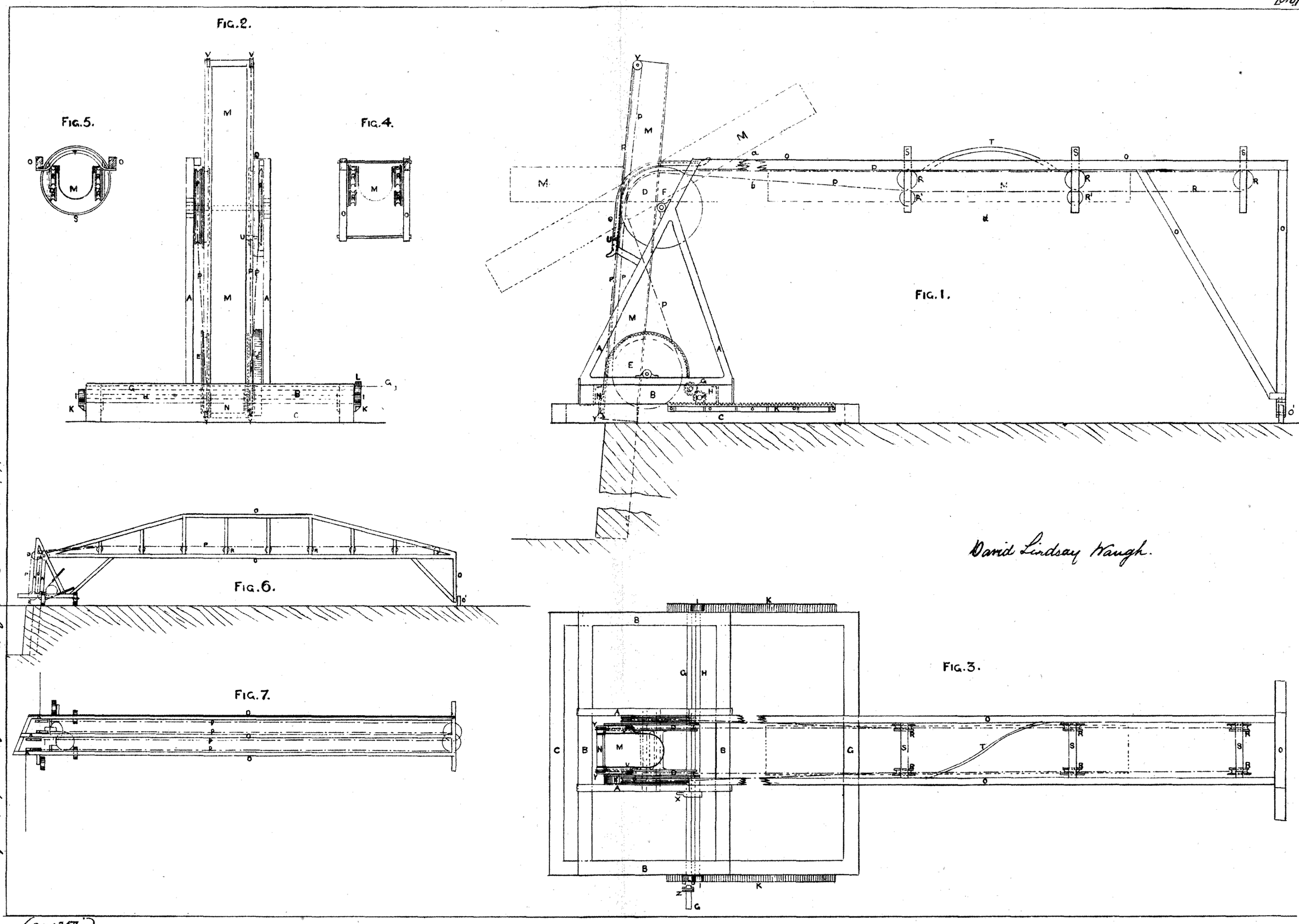

David Lindsay Waugh.

This is the Sheet of Drawings referred to in the annexed Letters of Registration granted to David Lindsay Waugh this Fifteenth day of April 1880.

Augustus Loftus.

(Sig: 357)

A.D. 1880, 21*st April*. No. 820.

IMPROVED AUTOMATIC CANDLE-EXTINGUISHER.

LETTERS OF REGISTRATION to Christopher Tester, for an Improved Automatic Candle-extinguisher.

[Registered on the 22nd day of April, 1880, in pursuance of the Act 16 Vic. No. 24.]

BY His Excellency the Right Honorable Sir Augustus William Frederick Spencer Loftus (commonly called Lord Augustus Loftus), Knight Grand Cross of the Most Honorable Order of the Bath, a Member of Her Majesty's Most Honorable Privy Council, Governor and Commander-in-Chief of the Colony of New South Wales and its Dependencies.

TO ALL TO WHOM THESE PRESENTS SHALL COME, greeting:

WHEREAS Christopher Tester, of Wellington, in New Zealand, but temporarily residing at Melbourne, in the Colony of Victoria, law stationer, hath by his Petition humbly represented to me that he is the author or designer of a certain invention or improvement in manufactures, that is to say, of an invention entitled an "Improved Automatic Candle-extinguisher," which is more particularly described in the specification and the sheet of drawings which are hereunto annexed; and that he, the said Petitioner, hath deposited with the Honorable the Treasurer of the said Colony of New South Wales the sum of Twenty Pounds sterling, for defraying the expense of granting these Letters of Registration, as required by the Act of Council, sixteenth Victoria, number twenty-four; and hath humbly prayed that I would be pleased to grant Letters of Registration, whereby the exclusive enjoyment and advantage of the said invention or improvement might be secured to him for a period of fourteen years: And I, being willing to give encouragement to all inventions and improvements in the arts or manufactures which may be for the public good, and having received a report favourable to the prayer of the said Petition, from competent persons appointed by me to examine and consider the matters stated therein and to report thereon for my information, am pleased, with the advice of the Executive Council, and in exercise of the power and authority given to me by the said Act of Council, to grant, and do by these Letters of Registration grant unto the said Christopher Tester, his executors, administrators, and assigns, the exclusive enjoyment and advantage of the said invention or improvement, for and during the term of fourteen years from the date hereof; to have, hold, and exercise unto the said Christopher Tester, his executors, administrators, and assigns, the exclusive enjoyment and advantage thereof, for and during and unto the full end and term of fourteen years from the date of these presents next and immediately ensuing, and fully to be complete and ended: Provided always, that if the said Christopher Tester shall not, within three days after the granting of these Letters of Registration, register the same in the proper office in the Supreme Court, at Sydney, in the said Colony of New South Wales, then these Letters of Registration, and all advantages whatsoever hereby granted, shall cease and become void.

In witness whereof, I have hereunto set my sign manual, and have caused the present Letters of Registration to be sealed with the seal of the said Colony of New South Wales, at Government House, Sydney, in New South Wales, this twenty-first day of April, in the year of our Lord one thousand eight hundred and eighty.

[L.S.] AUGUSTUS LOFTUS.

SPECIFICATION

A.D. 1880. No. 820.

Improved Automatic Candle-extinguisher.

SPECIFICATION of CHRISTOPHER TESTER, of Wellington, in New Zealand, but temporarily residing at Melbourne, in the Colony of Victoria, law stationer, for an invention entitled an "Improved Automatic Candle-extinguisher."

THIS invention has been designed for the purpose of ensuring the extinguishing of a candle whenever it has burned down to any given point, and consists of a contrivance which can be attached to any part of the candle, and which will automatically extinguish it immediately it has burned down to the required point.

My contrivance consists of an ordinary extinguisher, a spring clasp for the candle, and a spring connection between the extinguisher and the spring clasp.

The spring clasp can be opened out to receive any size candle, and is set in such a position as that the base of the extinguisher is on a level with that point in the candle at which it is desired to extinguish it.

The spring connection admits of the extinguisher being strained to the side of the candle while it is burning, and automatically brings it over so as to extinguish the candle when it has burnt down to the required point.

Referring to my drawings, figure 1 shows my invention double the ordinary size; figure 2 represents it of the ordinary size, affixed to a candle which is to be extinguished as soon as it is burnt down to the level of the base of the extinguisher; figure 3 shows plan of same in that position; and figure 4 represents it when it has extinguished the candle.

A is the extinguisher, B the spring clasp for the candle, and C the spring connection; both B and C being made, by preference, of flat steel springs. For the sake of convenience I make a nick in the side of the spring clasp, at *b*, to catch the extinguisher while the clasp is being placed on the candle, and when the clasp is set in the position required I release the extinguisher from such nick, and allow it to rest against the side of the candle as in figure 2.

Having thus described the nature of my invention and the manner of performing same, I would have it understood that what I claim is—

The combination of the extinguisher A, the spring clasp B, and the spring connection C forming my improved automatic candle-extinguisher, substantially as herein described and explained.

In witness whereof I, the said Christopher Tester, have hereto set my hand and seal, this fifth day of March, one thousand eight hundred and eighty.

CHRISTR. TESTER.

Witness—EDWD. WATERS,
Melbourne, Patent Agent.

This is the specification referred to in the annexed Letters of Registration granted to Christopher Tester, this twenty-first day of April, A.D. 1880.

AUGUSTUS LOFTUS.

REPORT.

Sir,

Sydney, 19 March, 1880.

We do ourselves the honor to state that we are of opinion that Letters of Registration may be granted to Mr. Christopher Tester, for an "Improved Automatic Candle-extinguisher," in conformity with his Petition, specification, drawings, and claim, transmitted for our report under your blank cover communication of the 10th instant, No. 1,991.

We have, &c.,
GOTHER K. MANN.
EDMUND FOSBERY.

The Principal Under Secretary.

[Drawings—one sheet.]

[B20]

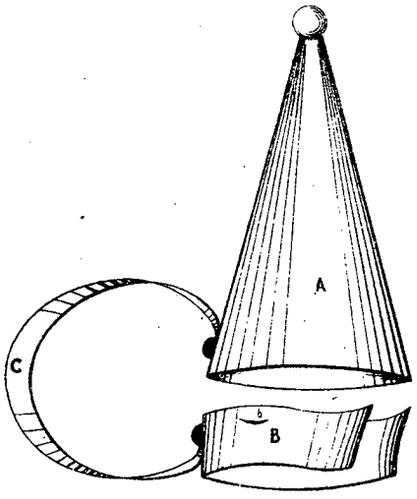

FIG. 1.

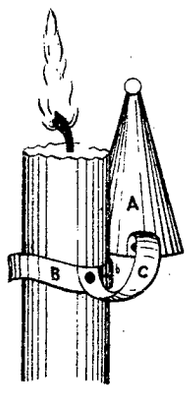

FIG. 2.

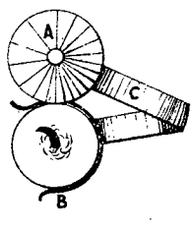

FIG. 3.

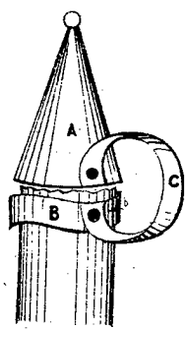

FIG. 4.

(Sig. 357)

PHOTO-LITHOGRAPHED AT THE GOVT. PRINTING OFFICE,
SYDNEY, NEW SOUTH WALES.

This is the Sheet of Drawings referred to in the annexed Letters of Registration granted to Christopher this twenty first day of April A.D. 1880.

" Augustus Loftus

A.D. 1880, 21*st April.* No. 821.

IMPROVEMENT IN ELECTRIC LAMPS, &c.

LETTERS OF REGISTRATION to Thomas Alva Edison, for an Improvement in Electric Lamps, and in the method of manufacturing the same.

[Registered on the 22nd day of April, 1880, in pursuance of the Act 16 Vic. No. 24.]

BY His Excellency the Right Honorable Sir Augustus William Frederick Spencer Loftus (commonly called Lord Augustus Loftus), Knight Grand Cross of the Most Honorable Order of the Bath, a Member of Her Majesty's Most Honorable Privy Council, Governor and Commander-in-Chief of the Colony of New South Wales and its Dependencies.

TO ALL TO WHOM THESE PRESENTS SHALL COME, greeting:

WHEREAS Thomas Alva Edison, of Menlo Park, in the State of New Jersey, United States of America, electrician, hath by his Petition humbly represented to me that he is the author or designer of a certain invention or improvement in manufactures, that is to say, of an invention of an "Improvement in Electric Lamps, and in the method of manufacturing the same," which is more particularly described in the specification and the sheet of drawings which are hereunto annexed; and that he, the said Petitioner, hath deposited with the Honorable the Treasurer of the said Colony of New South Wales the sum of Twenty Pounds sterling, for defraying the expense of granting these Letters of Registration, as required by the Act of Council, sixteenth Victoria, number twenty-four; and hath humbly prayed that I would be pleased to grant Letters of Registration, whereby the exclusive enjoyment and advantage of the said invention or improvement might be secured to him for a period of fourteen years: And I, being willing to give encouragement to all inventions and improvements in the arts or manufactures which may be for the public good, and having received a report favourable to the prayer of the said Petition, from competent persons appointed by me to examine and consider the matters stated therein and to report thereon for my information, am pleased, with the advice of the Executive Council, and in exercise of the power and authority given to me by the said Act of Council, to grant, and do by these Letters of Registration grant unto the said Thomas Alva Edison, his executors, administrators, and assigns, the exclusive enjoyment and advantage of the said invention or improvement, for and during the term of fourteen years from the date hereof; to have, hold, and exercise unto the said Thomas Alva Edison, his executors, administrators, and assigns, the exclusive enjoyment and advantage thereof, for and during and unto the full end and term of fourteen years from the date of these presents next and immediately ensuing, and fully to be complete and ended: Provided always, that if the said Thomas Alva Edison shall not, within three days after the granting of these Letters of Registration, register the same in the proper office in the Supreme Court, at Sydney, in the said Colony of New South Wales, then these Letters of Registration, and all advantages whatsoever hereby granted, shall cease and become void.

In witness whereof, I have hereunto set my sign manual, and have caused the present Letters of Registration to be sealed with the seal of the said Colony of New South Wales, at Government House, Sydney, in New South Wales, this twenty-first day of April, in the year of our Lord one thousand eight hundred and eighty.

[L.S.] AUGUSTUS LOFTUS.

SPECIFICATION.

Improvement in Electric Lamps, &c.

SPECIFICATION.

TO ALL WHOM IT MAY CONCERN: Be it known that I, THOMAS ALVA EDISON, of Menlo Park, in the State of New Jersey, United States of America, electrician, have invented an "Improvement in Electric Lamps, and in the method of manufacturing the same," of which the following is a specification.

IN a former application made by me for Letters of Registration, an improvement in electric lamps is set forth wherein a filament of carbon is enclosed in a glass bulb, and the atmosphere removed as nearly as possible, and the carbon is brought to incandescence by an electric current to form the lamp.

My present invention relates to an improvement in the process of manufacturing the carbon filament, and in the means for securing the same to the conductors.

I make use of paper of the desired thickness, as free as possible from foreign substances or adulterations, and for this purpose I prefer and use Bristol board. With suitable instruments, such as a punch and die, I cut out a narrow strip of this paper, preferably in the form of an elliptical bow or an arc of a circle, the ends of the strip being by preference wider than the other portions.

A number of these pieces of paper are laid flat-wise in the bottom of a mould, preferably of wrought iron, and there is laid on them a light weight in the form of a flat piece of gas retort carbon or other device that will not be distorted by the heat. If several of these are laid one on the other in the mould, a piece of tissue paper is interposed between each one and the next.

A cover is used to close the mould, and the mould is raised very gradually to a temperature of about 600° Fahr. This allows the volatile portions of the paper to pass away, and at the same time the mould retains the paper in its proper shape, and the paper is prevented from curling up or becoming distorted, as it would be likely to do if the heat was applied suddenly or the light weight dispensed with.

The mould is now placed in a furnace and heated almost to a white heat, and then removed and allowed to cool gradually. The carbon filaments will be found to be smaller than the cardboard blanks, and to be sufficiently strong and flexible for handling. The ends of the carbon are to be secured to the metallic conductors in any convenient manner.

The carbon filaments prepared as aforesaid are very uniform in their resistance to the electric current, and I make them thin and of a sufficient length to offer a great resistance to the passage of the current.

The clamps that connect the conductors to the ends do not require to be pressed with much force on the carbon, because the resistance to the passage of the current between the clamps and the carbon will be less than the resistance of the carbon filament, hence but little heat will be developed at the clamps.

In ordinary electric lamps the large carbons do not offer much resistance to the electric current, and unless the clamps are very firmly pressed upon the carbon, the current meets with considerable resistance at the clamps, and hence heat is developed at such clamps.

The clamps that I prefer are made of a steel spring tipped at the ends with platina or similar metal; the spring is bent into a circle or bow, and the ends crossed and turned back towards each other similar in shape to the figure 8, with the opening for the carbon between the spring ends at the upper part. The object of this shape is that the pressure of the clamps on the carbon may be increased by the expansion of the spring by the heat of the lamp, instead of being lessened, as it would be if the wire was only bent into a single bow.

The spring clamps are connected to the platina or similar conducting wires by clips, and the platina wires pass through the glass of the globe or bulb that contains the lamp. The air is to be exhausted from the bulb by any suitable means, and it is preferable to exhaust said air as perfectly as possible, say to the 1-800,000th of an atmosphere.

The lamps are suspended or supported in any convenient manner, and the electric current from a magneto-electric machine or other source of electricity is passed through the lamp, and brings the carbon filament to a high incandescence; and the lamp is very durable, and a large number of such lamps can be placed in the electric circuit in multiple arc or otherwise as desired.

In the drawing, figure 1 is a vertical section of the lamp complete; figure 2 is a side view in larger size of the clamping device; figure 3 is a section at the line $x\,x$ in still larger size; figure 4 is the wire forming one of the clamps before it is bent up to shape; figure 5 is the paper blank before it is carbonized; and figure 6 is a section of the box.

The blank a is cut out of paper material, such as Bristol board, in the proper shape; the form shown in fig. 5 is preferred. The same is laid in the metal mould b, and when several are laid one on the other, pieces of thin paper are introduced between. The weight d is laid on these; it is to be heavy enough to prevent the paper curling up under the action of the heat, but it allows the paper to contract as the volatile matters are expelled by the heat. This weight d is of gas retort carbon.

The cover e is placed on the mould and secured, and the mould is heated as before described. The carbon filament i forms the lamp when rendered incandescent by the electric current passed through it.

The clamp is made of the wire h, at the ends of which are tips or small rivets, r, of platina or similar material. The wire is bent up and crossed, as shown, so as to act as a spring in clamping the end of the carbon filament that is placed within such clamp. The wire is attached to a small stock, o, into which the conducting wire t passes and is clamped.

The conductors for the two ends of the carbon are inserted into the glass, and the latter intimately melted around them. The carbon and clamps are connected to the wires, and the parts introduced within the neck of the bulb m, and the glass melted at v; the air is exhausted from the globe by the tube k, that passes away as shown by dotted lines, and the tube melted together while the vacuum is maintained.

The lamp is ready for the conductors to be attached to it, and the carbon is rendered incandescent by the current that passes through the same. It is durable, as there is nothing to combine with the carbon, and it is substantially indestructible.

I claim as my invention—

First—The manufacture of carbons for electric lights from paper.

Second—The method herein specified of manufacturing carbons for electric lights, consisting in exposing the filament of paper to the action of heat in a mould, to drive off the volatile portions and carbonize the paper, substantially as set forth.

Third—A carbon for electric lights made as a filament, with the ends broader for the clamping devices that connect the conductors.

Fourth—The clamp for the carbon of an electric lamp composed of a bow or elliptical spring, with the ends crossing each other, and receiving between them the carbon, substantially as set forth.

Signed by me, this twenty-sixth day of December, A.D. 1879.

THOMAS ALVA EDISON.

Witnesses—

S. L. GRIFFIN, of Menlo Park, N.J.
Z. F. WILBER, of Washington, D.C.

This is the specification referred to in the annexed Letters of Registration granted to Thomas Alva Edison, this twenty-first day of April, A.D. 1880.

AUGUSTUS LOFTUS.

REPORT.

Sir, Sydney, 24 March, 1880.

The application of Mr. T. A. Edison for Letters of Registration for "Improvements in Electric Lamps" having been referred to us, we have examined the specification and drawings accompanying the same, and have now the honor to report that we see no objection to the issue of Letters of Registration as prayed for.

We have, &c.,
J. SMITH.
E. C. CRACKNELL.

The Principal Under Secretary.

[Drawings—one sheet.]

Fig. 1.

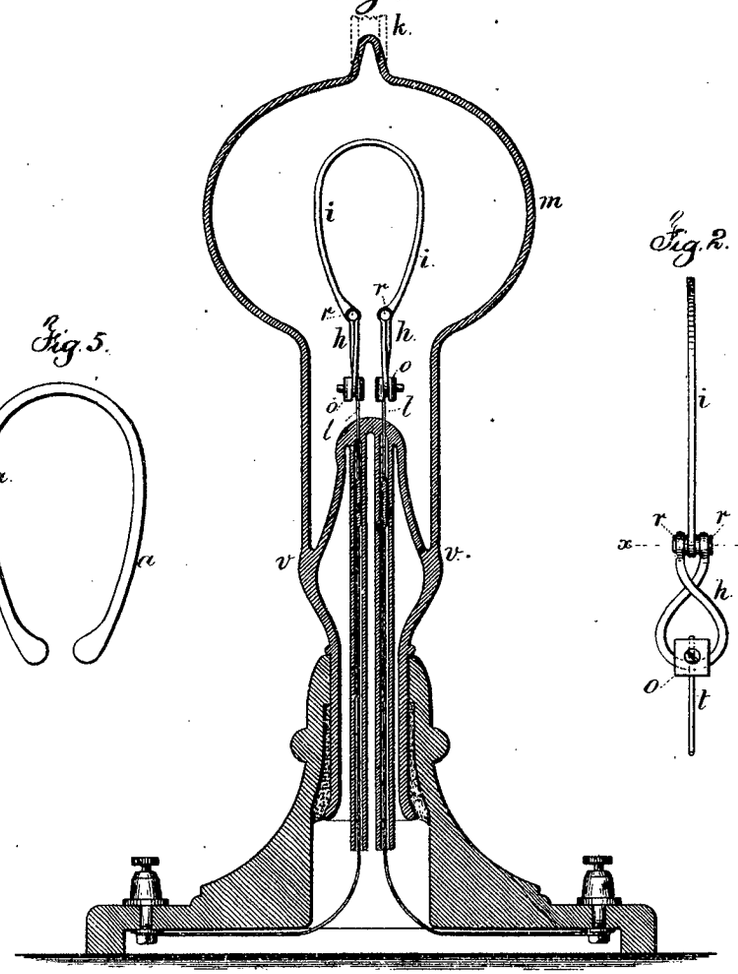

Fig. 2.

Fig. 3.

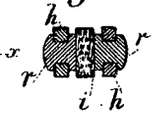

Fig. 4.



Fig. 5.

Fig. 6.

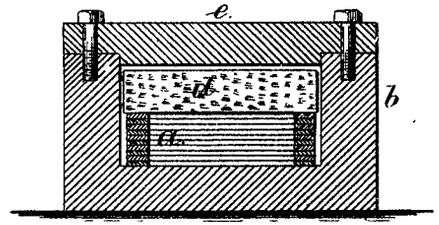

This is the sheet of Drawings referred to in the annexed Letters of Registration granted to Thomas Alva Edison this twenty first day of April A.D. 1880.

(Sig: 357~)

Augustus Loftus

Thomas Alva Edison
Inventor

Witnesses
S. L. Griffin
F. P. Wilber.

PHOTO-LITHOGRAPHED AT THE GOVT. PRINTING OFFICE, SYDNEY, NEW SOUTH WALES.

A.D. 1880, 26*th April*. No. 822.

IMPROVEMENTS IN WINDMILLS.

LETTERS OF REGISTRATION to Edmund Seymour Walter, for Improvements in Windmills.

[Registered on the 27th day of April, 1880, in pursuance of the Act 16 Vic. No. 24.]

BY HIS EXCELLENCY THE RIGHT HONORABLE SIR AUGUSTUS WILLIAM FREDERICK SPENCER LOFTUS (commonly called LORD AUGUSTUS LOFTUS), Knight Grand Cross of the Most Honorable Order of the Bath, a Member of Her Majesty's Most Honorable Privy Council, Governor and Commander-in-Chief of the Colony of New South Wales and its Dependencies.

TO ALL TO WHOM THESE PRESENTS SHALL COME, greeting:

WHEREAS EDMUND SEYMOUR WALTER, of Bridge Road, Richmond, in the Colony of Victoria, engineer, hath by his Petition humbly represented to me that he is the author or designer of a certain invention or improvement in manufactures, that is to say, of an invention entitled "Improvements in Windmills," which is more particularly described in the specification and the sheet of drawings which are hereunto annexed; and that he, the said Petitioner, hath deposited with the Honorable the Treasurer of the said Colony of New South Wales the sum of Twenty Pounds sterling, for defraying the expense of granting these Letters of Registration, as required by the Act of Council, sixteenth Victoria, number twenty-four; and hath humbly prayed that I would be pleased to grant Letters of Registration, whereby the exclusive enjoyment and advantage of the said invention or improvement might be secured to him for a period of fourteen years: And I, being willing to give encouragement to all inventions and improvements in the arts or manufactures which may be for the public good, and having received a report favourable to the prayer of the said Petition, from competent persons appointed by me to examine and consider the matters stated therein and to report thereon for my information, am pleased, with the advice of the Executive Council, and in exercise of the power and authority given to me by the said Act of Council, to grant, and do by these Letters of Registration grant unto the said Edmund Seymour Walter, his executors, administrators, and assigns, the exclusive enjoyment and advantage of the said invention or improvement, for and during the term of fourteen years from the date hereof; to have, hold, and exercise unto the said Edmund Seymour Walter, his executors, administrators, and assigns, the exclusive enjoyment and advantage thereof, for and during and unto the full end and term of fourteen years from the date of these presents next and immediately ensuing, and fully to be complete and ended: Provided always, that if the said Edmund Seymour Walter shall not, within three days after the granting of these Letters of Registration, register the same in the proper office in the Supreme Court, at Sydney, in the said Colony of New South Wales, then these Letters of Registration, and all advantages whatsoever hereby granted, shall cease and become void.

In witness whereof, I have hereunto set my sign manual, and have caused the present Letters of Registration to be sealed with the seal of the said Colony of New South Wales, at Government House, Sydney, in New South Wales, this twenty-sixth day of April, in the year of our Lord one thousand eight hundred and eighty.

[L.S.] AUGUSTUS LOFTUS.

A.D. 1880. No. 822.

Improvements in Windmills.

SPECIFICATION of EDMUND SEYMOUR WALTER, of the Bridge Road, Richmond, in the Colony of Victoria, engineer, for an invention entitled "Improvements in Windmills."

THIS invention of improvements in windmills has reference only to certain novel mechanical contrivances for automatically controlling or governing the speed of the wind-wheel, and consists essentially in a series of blades or fans revolving with the spindle of the wind-wheel, and which present a certain resistance to the atmosphere so as to retard the revolution of the wind-wheel. These blades or fans are kept to their work by means of a coiled spring, and whenever the wind-wheel revolves at a sufficient speed to cause such blades or fans to overcome the pressure of said spring and wind it up, the motion of this winding up is communicated to the sails of the wind-wheel so as to cause them to feather until the speed lessens to the standard. This standard is quite empirical, and depends upon the relation which the area of the governing blades or fans bear to the area of the sails of the wind-wheel—the larger the area of the governing blades the lower the standard. It will be noticed that the sails of my wind-mills do not feather by reason of their centrifugal tendency nor by reason of the strength of the wind, but by reason of the speed at which the wind-wheel resolves.

Referring now to my drawings. Figure 1 shows side elevation of a wind-mill constructed according to this invention; figure 2, face view thereof, and figure 3 plan, showing, however, only one sail on the wind-wheel, for the sake of clearness. A is the support or standard, the upper part of which, A^1, rests on friction rollers, A^2, and is free to rotate so as to accommodate itself to the wind no matter from what direction it may be blowing. B is the hub of the wind-wheel, from which radiate rods, B^1, on which the sails B^2 swivel. At the butt of the inner half of each of these sails is a lug, B^3, connected by link B^4 to the end of arm B^5. All these arms radiate from a collar, B^6, rigidly attached to the spindle B^7 of the wind-wheel. Each of these arms travels in a guide consisting of a slit or slot in arms B^8 projecting horizontally from the hub of the wind-wheel. The spindle B^7 of the wind-wheel runs horizontally to the back of the mill through a tube, C, encased in hollow castings, D, and has a set screw, B^9, near its hinder extremity, which travels in spiral slot E in hollow framing E^1. On the hinder end of tube C I fasten the hub F of the governing or controlling medium so as to revolve with the wind-wheel. From this hub radiate arms, F^1, carrying the blades or fans F^2, of which in my illustration there are four, although two or any greater number will answer the purpose. From this hub F there also proceeds an arm, F^3, around which is fastened the outer end of coiled spring F^4, whilst a stud, F^5, travelling between the flanges F^6, keeps said arm in position. The inner end of this coiled spring is firmly fixed to the outer hollow casting D. The detailed sketch under figure 2 shows section of said hollow casting on the line *a a* in figure 1. The ordinary contrivances for communicating motion from the spindle of the wind-wheel to the pump rod are here shown, and therefore need no description.

The working of the machine is as follows:—When the wind-wheel does not revolve beyond a certain maximum speed, which has been previously determined upon and provided for by the relative area of the sails of the governing contrivances and those of the wind-wheel, the mill proceeds as if it had no governing power, but immediately it travels beyond that point the resistance of the sails or blades or fans F^2 of the governing contrivance to the atmosphere overcomes the resistence of the coiled spring F^4 and begins to wind it up. This causes the set screw B^9 to travel backwards in the spiral slot E, carrying along with it the spindle B^7 and so through the medium of collar B^6, radiating arms B^5, links B^4, and lugs B^3, compelling the whole of the sails B^2 to swivel or feather on their axes or rods B^1 until the wind-wheel shall have been reduced to its maximum speed.

Having thus described the nature of my invention and the manner in which it is to be performed, I would have it understood that I do not claim the exclusive use of springs or set screws or slots, for the purpose of regulating or controlling the speed of wind-mills, neither do I claim the swivelling or feathering of their sails; but I do claim the combination of the mechanical devices marked F to F^4 inclusive, with those marked B to B^9 inclusive, and with those marked E and E^1, for the purpose of automatically governing or controlling the speed of windmills, substantially as herein described and explained.

In witness whereof, I, the said Edmund Seymour Walter have hereto set my hand and seal, this twentieth day of February, one thousand eight hundred and eighty.

EDMD. S. WALTER.

This is the specification referred to in the annexed Letters of Registration granted to Edmund Seymour Walter, this twenty-sixth day of April, A.D. 1880.

AUGUSTUS LOFTUS.

REPORT.

Sir, Sydney, 22 March, 1880.

We do ourselves the honor to state, in reply to your blank cover communication of the 27th ultimo, No. 1,680, that we are of opinion that Letters of Registration may be granted in favour of Mr. Edmund Seymour Walter, for "Improvements in Windmills," in terms of his Petition, specification, drawings, and claim.

We have, &c.,

GOTHER K. MANN.

The Principal Under Secretary. WILLIAM C. BENNETT.

[Drawings—one sheet.]

No. 823.

[Re-assignment of No. 629. See page 177 of Return of 3 March, 1881.]

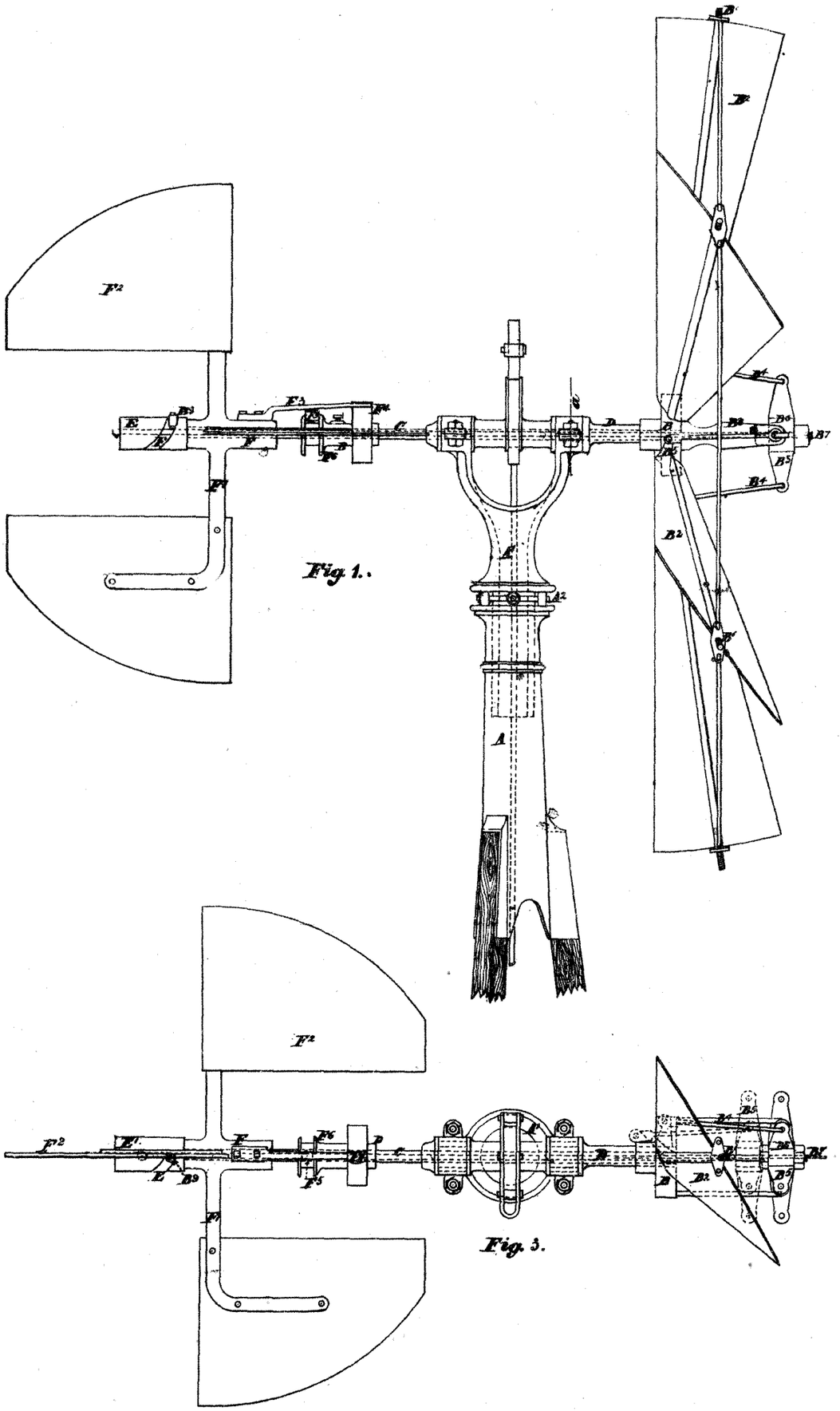

Fig. 1.

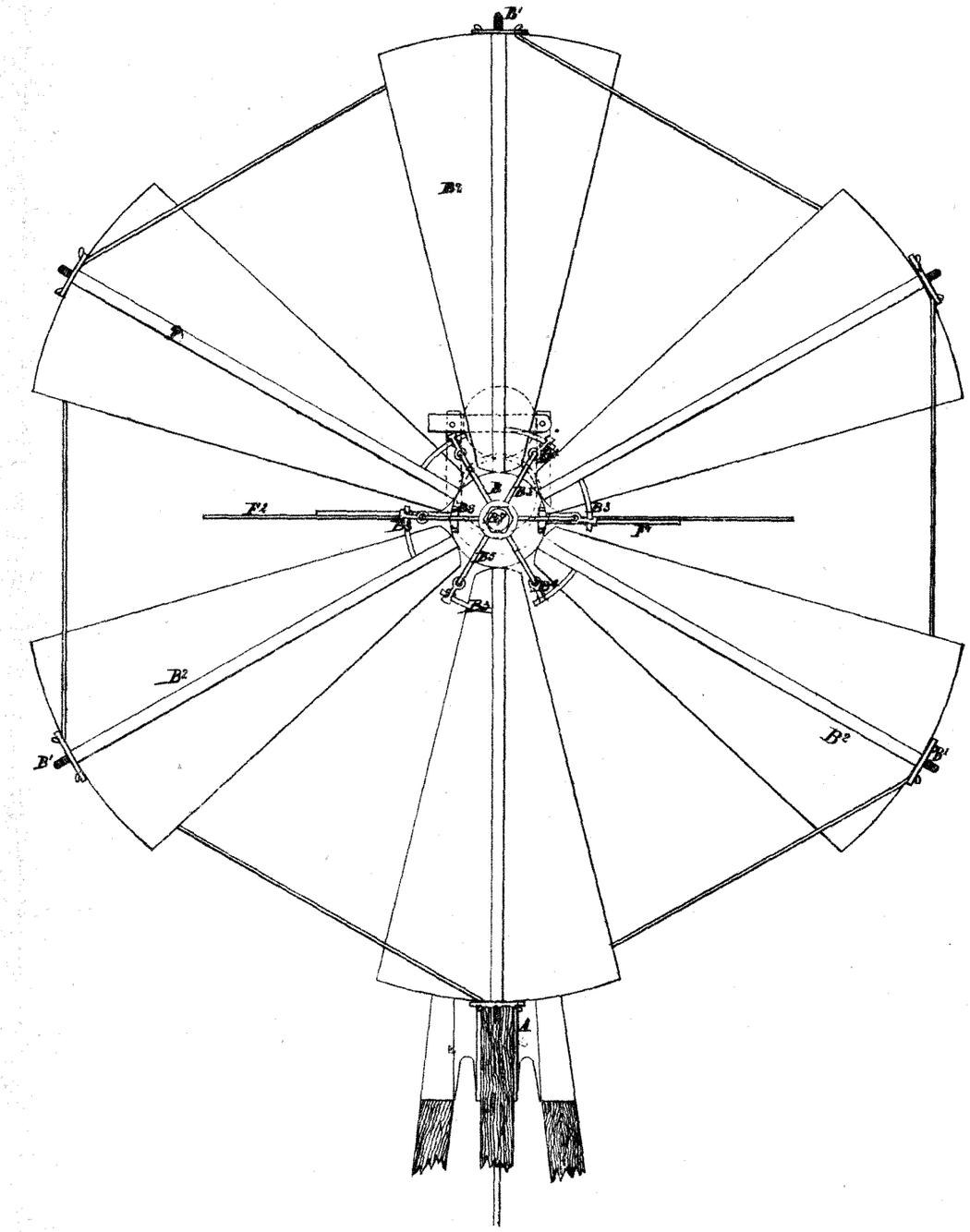

Fig 2

Fig. 3.



E.S. WALTER'S, PATENT.

(Sig: 357-)

PHOTO-LITHOGRAPHED AT THE GOVT. PRINTING OFFICE, SYDNEY, NEW SOUTH WALES.

This is the Sheet of Drawings referred to in the annexed Letters of Registration granted to Edmund Seymour Walter; this twenty-sixth day of April, A.D., 1880.

Augustus Loftus

A.D. 1880, *5th May.* No. 824.

IMPROVEMENTS IN RAILWAY CROSSINGS AND SWITCHES, &c.

LETTERS OF REGISTRATION to Joseph Stokes Williams, for Improvements in Railway Crossing and Switches, and Apparatus to be used in connection therewith.

[Registered on the 7th day of May, 1880, in pursuance of the Act 16 Vic. No. 24.]

BY HIS EXCELLENCY THE RIGHT HONORABLE SIR AUGUSTUS WILLIAM FREDERICK SPENCER LOFTUS (commonly called LORD AUGUSTUS LOFTUS), Knight Grand Cross of the Most Honorable Order of the Bath, a Member of Her Majesty's Most Honorable Privy Council, Governor and Commander-in-Chief of the Colony of New South Wales and its Dependencies.

TO ALL TO WHOM THESE PRESENTS SHALL COME, greeting:

WHEREAS JOSEPH STOKES WILLIAMS, of Riverton, New Jersey, United States of America, now of Glasgow, in the county of Lanark, North Britain, hath by his Petition humbly represented to me that he is the author or designer of a certain invention or improvement in manufactures, that is to say, of an invention of "Improvements in Railway Crossings and Switches, and in Apparatus to be used in connection therewith," which is more particularly described in the specification, marked A, and the nine sheets of drawings, marked B, C, D, E, F, G, H, I, and J, respectively, which are hereunto annexed; and that he, the said Petitioner, hath deposited with the Honorable the Treasurer of the said Colony of New South Wales the sum of Twenty Pounds sterling, for defraying the expense of granting these Letters of Registration, as required by the Act of Council, sixteenth Victoria, number twenty-four; and hath humbly prayed that I would be pleased to grant Letters of Registration, whereby the exclusive enjoyment and advantage of the said invention or improvement might be secured to him for a period of fourteen years: And I, being willing to give encouragement to all inventions and improvements in the arts or manufactures which may be for the public good, and having received a report favourable to the prayer of the said Petition, from competent persons appointed by me to examine and consider the matters stated therein and to report thereon for my information, am pleased, with the advice of the Executive Council, and in exercise of the power and authority given to me by the said Act of Council, to grant, and do by these Letters of Registration grant unto the said Joseph Stokes Williams, his executors, administrators, and assigns, the exclusive enjoyment and advantage of the said invention or improvement, for and during the term of fourteen years from the date hereof; to have, hold, and exercise unto the said Joseph Stokes Williams, his executors, administrators, and assigns, the exclusive enjoyment and advantage thereof, for and during and unto the full end and term of fourteen years from the date of these presents next and immediately ensuing, and fully to be complete and ended: Provided always, that if the said Joseph Stokes Williams shall not, within three days after the granting of these Letters of Registration, register the same in the proper office in the Supreme Court, at Sydney, in the said Colony of New South Wales, then these Letters of Registration, and all advantages whatsoever hereby granted, shall cease and become void.

In witness whereof, I have hereunto set my sign manual, and have caused the present Letters of Registration to be sealed with the seal of the said Colony of New South Wales, at Government House, Sydney, in New South Wales, this fifth day of May, in the year of our Lord one thousand eight hundred and eighty.

[L.S.] AUGUSTUS LOFTUS.

A.

Improvements in Railway Crossings and Switches, &c.

A.

SPECIFICATION of JOSEPH STOKES WILLIAMS, of Riverton, New Jersey, United States of America, now of Glasgow, in the county of Lanark, North Britain, in the United Kingdom of Great Britain and Ireland, for an invention of "Improvements in Railway Crossings and Switches, and in Apparatus to be used in connection therewith."

MY invention relates to improvements for securing more perfect bearings for wheels on railways at the switches and crossings or either of them (thereby ensuring strength and durability in the bearing surfaces and safety in working), and combining with my improved construction and arrangement of shifting parts at switches and crossings suitable operating, holding, locking, signalling, testing, safety, and interlocking apparatus, so as to secure the proper relative working of all the parts, rendering impossible the giving of conflicting signals or the setting of the signals contrary to the actual position of the switches and crossings, or the movement of such switches, crossings, or signals, by the switchman or signalman, while the train is passing a given point, or until the switchman or signalman shall have been properly notified by the starter or signalman, at some other point or station who may control the movement of such shifting-parts, and be controlled in similar manner by means of suitable mechanism which interlocks with such signalling and shifting-parts.

It also relates to combining with such shifting-parts, and parts operating and interlocking therewith, a catch, slip, or switch, for additional safety.

It also relates to other devices hereinafter described.

One very important feature of the said invention is the employment of main-line rails which are uncut or undivided, that is to say, they have no cuts, gaps, or apertures at the parts where they are crossed by the other lines in the arrangements hereinafter described.

In order to adopt my method of securing the improved bearing for the wheels at switches and crossings of railways at such places where customarily the switch rails of one line are operated by the same lever as adjusts the switch rails of another line, as in transferring vehicles from one line to another, or such as a cross-over road, I provide in combination with such switches, crossings which secure continuous bearings at the frog, or V-piece by the use of a shifting piece or pieces adjustable to or from the line to be crossed, and such shifting piece or pieces, or parts, may or may not afford the bearing surface for the wheels on both lines, and such shifting-pieces at the crossings (where the ordinary frog or V-piece is used) may or may not be connected with the same lever, which is used to adjust the two switches in any preferred manner, and the switches may be of any suitable pattern, and so controlled as to secure the relative adjustment of the parts.

In the accompanying drawings, figure 1 is a plan of a double line of railway, and siding and cross-over roads, as at an ordinary station.

Figure 2 is a plan of a cross-over road in connection with a double line.

Figures 3 and 4 are plans of a through crossing with the shifting parts in different positions, as hereinafter described.

Figure 5 is a plan of a compound slip or a cross-over combined with a through crossing.

Figure 6 is a plan of a modified arrangement of a compound slip.

Figure 7 is a plan of a double cross-over road.

Figure 8 is a plan of another arrangement of a cross-over road.

Figures 9 and 10 are plans illustrating a peculiar construction of the shifting piece and other parts to be used instead of the ordinary double V-pieces.

Figure 9ª is a transverse section on the line *x' x'*, figure 10.

Figures 11 and 12 are plans of other shifting-pieces which I substitute for the ordinary V-piece used at crossings.

Figures 13, 14, and 15 are transverse sections on the lines *x x*, *y y* and *z z* of figure 11.

Figure 16 is a transverse section illustrating a modification of part of this apparatus.

Figure 17 is a plan illustrating the employment of a rail of reduced width at a switch for ensuring increased bearing surface for the wheels in passing on the side or crossing line.

Figure 18 is a plan illustrating the employment of a catch slip in combination with my improved crossings and switches.

Figures 19 and 20 are a plan and sectional elevation illustrating an arrangement for preventing adjustment of a switch by the switchman or signalman while a train is passing a part of the line.

Figure 21 is a plan showing a junction and a cross-over road, provided with means for preventing the adjustment of the shifting or moving parts by the switchman or signalman, while a train is passing a part of the line as hereinafter described.

Figure 22 is a plan illustrating the arrangement of a switch hereinafter referred to.

Figure 23 is a plan of a series of levers hereinafter described. Figures 24, 25, 26 are sectional elevations on the lines *x* x* y* y* z* z** of the same.

In order to secure the advantages of a permanent or immovable line or rails, without cut, gap, or opening in the same, or a series of such, both at the switch and crossing, for instance, when I desire to transfer a vehicle from one line to another, I employ shifting-pieces that afford bearings for wheels, and which shifting-pieces are so constructed and arranged as to support and carry wheels above and over the immovable rail, and are adjustable by a lever or levers to close contact with the immovable rails of the line, one shifting piece being located outside the gauge, and the other inside the gauge, and on the opposite side of the line or track, and in combination with the shifting-piece located inside the gauge, I employ a guard which defines the course of the wheels, and is so constructed or arranged as to allow the flange of the wheel to pass between such guard and the shifting-piece which affords the bearing surface for the wheels on one side of the line.

This part of my invention is illustrated in figure 2 of the drawings, which shows a double line with a cross-over road which has shifting-pieces at the crossings and switches for completing, opening, and closing the crossing line with an undivided main-line rail; *a a* are the main-line rails; *b b* are the crossing rails; *c* is the shifting-piece on the outside of the line; and *d* is the shifting-piece on the inside of the same.

When

When the shifting-parts or switch rails *c d* are adjusted to transfer the vehicles to or from the main line *a a*, they are below on a level with the surface of the immovable rails *a* at *c' d'*, and by the gradual incline or elevation of these rails *c d*, or the rail *c*, the wheels are supported and carried over the immovable rail *a*, and by such necessary elevations of the crossing-line *b*, above the immovable rail or rails to be again crossed, I secure a continuous bearing for the wheels at such subsequent crossings by means of a shifting piece or pieces, *e*, to complete the crossing-line where such line continues on both sides of an immovable rail or rails, and by the employment of the switches for directing the vehicles from one line to another any number of immovable lines or rails may be crossed, and the bearing surfaces on such elevated crossing-line much improved, particularly at crossings where the frog or V-pieces are ordinarily used.

In some cases I use the arrangement shown in figure 8, where the shifting-pieces *e* which afford the bearing for the wheels crossing the immovable rails *a*, and by a gradual incline on either or both sides of such crossing-piece *e*, cause the vehicles to pass to or from the main line *a*, on a level with such line, that is to say, the switch-rails *f* which direct the vehicles from one line to another will not be inclined or elevated in connection with such cross-over roads or lines similarly operative. Similar advantages may be secured at crossings and switches, or either of them, where what are sometimes termed through crossings are used, as shown in figures 3 and 4, and when shifting-parts termed compound slips are used in combination with so called through crossings, as in figures 5 and 6.

Figure 3 shows a through crossing with the shifting parts or pieces adjusted away from the crossing-line, that is to say, so adjusted as to leave the main line clear; figure 4 shows the same with the shifting parts adjusted to complete the crossing-line. *a a* are the main-line rails; *b' b'* the crossing-line rails; *e e* the shifting-pieces that afford the bearings for wheels crossing the immovable rails. The flanges of the wheels pass along the edge of these shifting-pieces; *e' e'* are the shifting-pieces shown in figures 9, 10, and 9[a] and hereinafter described; *g g* are connecting rods extending to the levers or other operating or adjusting devices; these shifting-pieces *e e'* are all connected, and may be operated by the same lever, that is to say, the lever that adjusts the switch which completes the through line, or they may be operated by more than one lever in any manner that may be desired.

Figures 9[b], 10[b], 11[b], and 12[b] show a shifting-piece or rail, *e*, which is inclined or has one end elevated at the crossing as shown in figure 11[b], which is a longitudinal section on the line *x' x'*, figure 9. This elevated end is arranged in combination with a fixed or permanent main line rail *d*, so that the wheels will engage with or enter upon the said inclined shifting-piece *e*, at its low or unelevated end, *e*[6], which is level, or about level with the main-line rail. This shifting-piece *e* is arranged on the inner side of the main rail *d*, and forms when closed or pressed against the same a continuation of the fixed or permanent siding rail *f*, which is level with or of the same height as the main-line rail, and meets the other side of the said main-line rail.

The shifting-parts adjacent to each main line employed to complete the crossing may be connected and operated by separate levers.

I employ suitable interlocking arrangements as hereinafter described to secure the proper relative working of the shifting-parts and signals in connection therewith.

Figure 5 shows a through crossing similar to that illustrated in figures 3 and 4, with switch-rails *c d* to direct the vehicles to or from the main line *a*, and also shows in combination with this through crossing-line, *b' b'*, a compound slip or cross-over road, *b b*, which connects the through crossing road *b' b* with the main line rails *a a* at *h*. Through the medium of the compound slip or the cross-over road *b b*, and the through crossing road *b' b'* a connecting line from one set to another set of main-line rails is obtained. In constructing this compound slip or cross-over road, as shown, it is mostly on a level with the through crossing. At one end of the compound slip, the switch-rails *i* are of the ordinary kind, that is to say, they are level with the continuing lines *b' b'*. At the other end at *h* the switch-rail carries or supports the wheels over the undivided rail *a*; or the vehicles may be transferred to or from the crossing-line at *h*, on a level with the main line *a a*, by the employment of a switch which is not inclined or elevated. To avoid raising the cross-over road to a higher level than the through crossing at *i'*, I employ an ordinary crossing.

The shifting-pieces for completing the through crossing are in some cases arranged and operated or adjusted in the same manner as described in connection with figures 3 and 4; and the shifting-pieces of the compound slip or cross-over road may be operated by a separate lever.

Figure 6 shows a through crossing road with similar shifting-pieces to complete the crossing-line, *b' b'*, where the line continues on both sides of the rail or rails to be crossed, as shown and described in connection with figures 3, 4, 5. The cross-over road or compound slip *b b* is so located and operative as to avoid cutting or crossing the lines *b' b'* or *a a*, as shown and described in figure 5. In some cases these shifting-pieces to complete the crossing-line *b' b'*, where such line continues on both sides of the line or lines to be crossed, may be used in combination with switches which are not inclined or elevated. The shifting-pieces to complete the line *b' b'* are operated and controlled as herein described in connection with cross-over roads or lines, which are broken or interrupted at more than one point other than where the crossing-line extends on both sides of the rail or rails to be crossed.

Figure 7 shows a double cross-over road in which *a a* are the main-line rails; *b b* the cross-over rails; *e e e e* are shifting-pieces similar to those shown in figure 2 for completing the cross-over roads or lines *b b*. Where the cross-over roads cross each other I employ the ordinary construction of crossings as at *i' i' i' i'*. The switch-rails *c d* are similar to those shown and described in connection with undivided and immovable rails as in figure 2, but any preferred form of switch may be used.

Figure 8 shows a cross-over road with shifting-pieces *e e* comprising the crossing-line without cutting, dividing, or moving the main-line rails *a' a'*. In this arrangement the switch-rails at *f f* do not provide for crossing an undivided main-line rail, but direct the vehicles from the main-line rails *a' a'* on a level with the same. These switch-rails are the ordinary tapered or planed rails, but it will be understood that any form of switch rail or rails, operating on a level with the rails *a a*, may be used. I have shown one other form of such switch in figure 22. The operating connections may be of any preferred form.

The

The adjustable pieces *e e* at the crossings may be connected with a lever independent of the switches, or may be connected with one or both of the switches; or the shifting parts at the crossing on each main-line may be connected with a separate lever, and operated independently with each other, but they should be suitably interlocked with each other, and with signals to prevent improper adjustment or the giving of conflicting signals.

The shifting-piece e', shown in figures 9, 10, 9^a, and which is employed to complete the crossing-line, is formed with a projection e^2, which forms the bearing surface for the tread of the wheels, and with a depression or channel at e^3, through or over which the flange of the wheels pass. When the said shifting-piece is adjusted to complete the crossing-line, the parts which afford the bearing for the wheels and the passage for the flange cause no impediment or obstruction on the crossing-line. Moreover, this peculiar formation of the shifting-piece e' ensures its adjustment from the crossing-line by the passage of vehicles on the main line if such piece should be adjusted to complete the crossing-line. The shifting-piece e' is firmly supported in the direction of the crossing-line, of which it forms a part, by the immovable main line rail or otherwise, and its free end laps the continuation of the crossing-line b', and may or may not be arranged to be supported by such lapping part or plate when adjusted to complete the crossing-line. I provide continuous or sectional supports or chairs for securing the crossing-rail or plate to which the shifting-piece e' is adjustable; I also provide for properly supporting the said shifting-piece. This form of crossing is particularly applicable in connection with through crossings.

The construction and arrangement of the shifting-piece *e* at the crossing is more clearly shown in figures 11, 12, 13, 14, 15.

In these figures a^* represents a filling-piece which supports the end of the crossing-rail *b*. The said filling-piece is provided with lugs, a' a', by means of which it is firmly secured to the sleepers. This shifting-piece *e* is pivoted at e^*, and is supported upon plates e^4 in its movements in and out of connection with the crossing-line *b*. The face or edge e^{**}, of the shifting-piece e', or of the shifting-piece *e*, may be curved as shown in figures 9, 10, 11, and 12, or may be inclined or angular, as shown in figure 12^a.

In figure 16 I have shown a modified form of the shifting-piece *e*, in which the bearing surface of the said shifting-piece is attached to the bar e^5 by means of bolts or rivets.

In some cases I use in connection with my improved system an immovable rail or rails of reduced width at the crossing, thereby creating a recess that ensures a greater bearing surface for wheels crossing the same.

This arrangement is shown in figure 17, where the main-line rail *a* from 1 to 2 is made of less width than the continuation of the said main-line rail beyond these points for the purpose of securing a recess in which the switch-rail *c* can be shifted or located, so that the said switch-rail will be nearer to the inner gauge of the track or line.

The rail of reduced width is shown as fished to the continuation of the main line, that is to say, a section of rail of less width than the other part of the rail is placed on the line and secured in the ordinary manner, the inner edge of the said reduced rail being even with the continuation of the main-line rail *a*.

The catch-slip, catch-switch, or trap, commonly used on railways for additional safety at parts of the line, may be operated in combination with my improved shifting parts. This combination is illustrated in figure 18, in which *e* is the shifting-piece for the crossing of an undivided main-line *a* and b^* b^* are the siding rails. In case the switch at *h*, the crossing *e*, and the shifting part h^* cannot be adjusted to complete the crossing-line, the vehicles cannot pass from the siding to the main line. I thus ensure safety, as the signals must be set to danger for the main-line traffic when it is possible for vehicles to pass to or from main-line rails *a*, when such shifting-parts are interlocked by suitable interlocking apparatus connected with such signals in connection with a cross-over road, as shown in figure 1, or lines similarly operative.

I also combine with the operating connections which adjust the shifting-parts herein described compensating levers, such as are commonly used to prevent the variation by temperature in the length of these connections, thereby preventing, or partially preventing, the improper location of such shifting-parts.

In cases where I actuate a series of shifting-parts at the crossings where the crossing-line continues on both sides of the line to be crossed, I employ means for preventing movement of such shifting-parts at the crossings and connections thereof, or parts interlocked therewith or thereby, while the train is passing. This object is secured by the use of projecting faces or arms upon bars, rods, cords, or wires so arranged that in the movement thereof they are necessarily directed from a straight course, or cause other parts to be moved, and in such movement will be acted on by some impediment offered by a passing train, and any part connected to or interlocked by such connection will thereby have its movement prevented while the train is passing.

By the use of a light rod, cord, or wire, this device may be employed to an extent not heretofore practicable, and will not be of such weight as to prevent ready adjustment by the lever or actuating device. The said rod, wire, or cord, being connected or interlocked with either the switch or the shifting-piece, at the crossing or the signal, or with any or all of the same, the movement of any part so connected, or interlocked, or retained, will be impossible while a train is passing. The said cord, wire, or locking-bar may be the signal cord, or the operating connection between the shifting-parts, and may be operated in any preferred manner. The said locking-bar, cord, or rod may be connected with a lever independently of the lever which adjusts the switch, this independent lever being connected with the locking-bar and actuating a bolt which interlocks the switch or shifting-parts whose movements have been tested by any desired means. The withdrawing of the said bolt will necessitate the movement of parts which the passing train will prevent, thereby rendering it impossible to move such parts as are connected or interlocked by the lever which actuates such locking cord or bar. I have shown the said cord or wire in figures 19 and 21, adjacent to the railway line for the purpose described.

Figures 21^a and 21^b show inside elevation and transverse section on an enlarged scale, means for elevating the cord in any endwise movement of the same, which in this instance consists of an incline k' on the cord, wire, or rod *k*, and which is arranged in connection with an incline formed on the bearing k^* for supporting the said rod, cord, or wire.

In

In the modification of the device for raising this cord or light rod, shown in figure 21ᶜ, I employ a small arm, k^2, which during the movement of the said cord or light rod will elevate the same.

The testing of the adjustment and the bolting of the shifting-parts of the permanent-way and connections thereof that secure improved bearing surfaces for the wheels, are effected by means of a bolt adjusted to measure the throw or distance of the shifting-parts, that is to say, if the switch or shifting-piece at the crossing signal or other movable part is interlocked or bolted by such bolt, upon withdrawing the said bolt from the socket or aperture with which it engages, the said bolt cannot complete the distance through which it will have to move, being prevented by a wall or surface until the shifting-parts whose position it has to test, or which it has to bolt, shall present an engaging wall or surface which will indicate the positive adjustment of the parts.

In figure 19 I have shown a testing or locking bolt, *s*, provided with a projection, *s'*, which engages in the aperture *t'*, in the piece *t* connected with the switch. If the said projection *s'* should be withdrawn form the aperture *t'*, in the part *t*, the said projection cannot complete its full limit of movement until the switch and the piece *t*, in connection therewith are adjusted, and bring the aperture t^2 opposite the projection *s'* aforesaid, which will designate the complete adjustment of the switch.

If the above-described cord, rod, or wire *k* be connected with a testing and locking bolt, the unbolting of the shifting-parts will be prevented whilst the train is passing, or any desired number of shifting-parts interlocked therewith or thereby may be so retained.

In some instances this object is effected by shifting the position of the bolt in the direction of the adjustment of the shifting-parts to be tested or interlocked, that is to say, such bolt having been withdrawn from the first locking surfaces which indicate the complete adjustment of the shifting-parts to one position, the said shifting-parts are adjusted completely to another position, and the said bolt can then be shifted to meet the second locking surfaces.

The direction of movement of this bolt after being withdrawn from the locking walls or surfaces may be in a direct line with the shifting-parts or otherwise, or this bolt may be located between the shifting or adjustable parts which present obstructing and bolting walls or surfaces, that is to say, after withdrawing the said bolt from the engaging walls or surfaces which measure or test the adjustment of the shifting-parts in one direction, such bolt cannot engage with the other bolting walls or surfaces and complete the distance of its movement until the shifting-parts have been adjusted to their other position, and before the said bolt can be thrust in the locking aperture the shifting-parts must be properly located, this location being indicated by the position of the lever which actuates the said bolt.

If desired the said testing and bolting device may be connected with the locking-bar, cord, or wire, which is kept from moving by a passing train, and it will thereby prevent the withdrawing of the bolt, and consequently the adjustment of the movable parts either of the rods, or signal, or such other parts as may be so retained.

In some cases, either connected with or independent of other locking and testing devices, I employ a rail or piece which affords the bearing for the wheels, and which I cause to be shifted parallel, or nearly so, with the immovable rail adjacent thereto, so as to prevent adjustment by switchman of such piece and its connections while the train is passing.

In figures 19 and 20 I have shown in connection with a permanent, or undivided, or uncut main-line an arrangement of facing points and means for preventing the adjustment of the same while a train is passing on either line at these points; the object being to avoid the splitting of a train. In this arrangement, a portion of the surface of the switch-rail *c* to complete the crossing or side line, is raised above the lever of the main-line rail *a*, by means of a pin, *u'*, attached to a bar, *u*, which slides backwards and forwards, beneath the said rail *c*. This bar *u* is provided with projections u^2 which serve to support the rail in its elevated position. The pin *u'* which works in a double incline slot, V, causes the necessary movement of the said switch-rail, but if the vehicles are passing over the main-line rail, such adjustment cannot be effected, thereby preventing the adjustment of the switch-rail *d*.

In adjusting the bar or plate *u*, the switch-rail *d* is adjusted to a corresponding position to complete or interrupt the crossing-line. In order to break the continuity or completion of the crossing-line at such switch the said rail *c* must again be raised, and as its adjustment cannot take place during the passage of a train over this rail or any part connected therewith it cannot be moved during that time by the switchman or signalman. I provide suitable connections or additions to such switch or the apparatus in connection or interlocking therewith to prevent adjustment (while the train is passing) over a greater distance than the most extended wheel-base of the vehicles employed on railways.

In connection with the switch in figure 19, I have shown the locking and testing device above described, and have shown the locking cord connected thereto.

In the junction shown in figure 21, *a a a a* are the main-line rails; *b' b' b' b'* are the crossing-rail; *e e'* are the shifting-pieces. The switch-rails *c d* are similar to those shown and described in connection with the through crossings in figure 5, but any form of switch can be used as above described.

The switch-rail at h^2 is constructed similarly to that shown in figures 19 and 20, so as to prevent adjustment by the switchman while a train is passing. The cross-over road *b* in front of the junction is similar to those above described, and filling-pieces *m*, and guards *n* are provided at each end of the same to ensure the passage of vehicles to the main lines if such switch-rails shall not be properly adjusted to complete the cross-over road.

One form of my improved shifting-piece, and its method of attachment and operation, are shown in figures 7^x to 14^x, in which *a* represents the main-line rail, *b* the crossing-rail, *e* the shifting-piece, and *f* the filling-piece. The shifting-piece *e* is suported upon chairs as shown at *g* g^1 g^2 the chair *g* being provided with upward extensions or recesses, as shown in figures 13^x and 14^x to support the pivoted end of the said shifting-piece, and also the main and crossing rails *e**, represents a projecting-piece attached to the shifting-piece *e*, and retained in the chair *g*, by means of the upward extension *g**, the said extension effectually preventing any improper movement of the shifting-piece; *h* represents a plate, one end of which is provided with an ear, through which end the aforesaid projecting-piece *e**, the pivot, pin, or stud *e*** passes. The said plate *h* is secured at its other end to or against the crossing-rail *b*. This plate *h* aids in securing the said crossing-rail and also the shifting-piece *e* in their proper positions. It will be seen by reference to figures 7^x and 8^x that the tapered end *b**, of the crossing-rail *b*, on the side

side of the rail *a*, opposite the shifting-piece *e*, is provided with a blunt end to prevent the flange of the wheels striking and impinging the same. The filling-piece *f* is supported upon the chairs g^1 g^2, the said filling-piece, the rail *b*, and the main rail *a* all being secured together on the said chairs by means of wedges, f^*. In figure 15^x I have shown a shifting-piece, *e*, of reduced width, whereby greater facility is afforded for automatic adjustment, and also to provide for the difference in the height due to the wearing away of the supporting or filling-piece *f*.

In figures 16^x and 17^x I have shown a shifting-piece, *a*, with the bearing surface for the wheels of greater height than other parts of the upper surface of the same. This construction of the said shifting-piece reduces the weight of the same and permits wheels which are worn to pass over the said shifting-piece without jarring. Figure 18 shows in section a shifting-piece similar to that above described, the part of the said shifting-piece, which extends below the surface of the main-line rail *a* being provided with a flange of suitable thickness to provide strength with a small amount of weight.

Figures 19^x to 28^x show a similar form of shifting-piece to that shown in figures 7^x to 11^x, the said shifting-piece being arranged to be raised and lowered in order that its upper surface may be in an inclined position relatively to the main-line rail when adjusted away from the crossing-line as shown in figure 19^x. Figure 21^x shows the position of the said shifting-piece by means of which the wheels on the crossing-line *b* will pass upon or along the incline, and without jar transfer the weight from the "tread" to the flange or *vice versâ*, the wheels being supported by the flange when passing over the filling-piece *f* and main-line rail *a*. It also shows the tapered end b^* of the rail *b* inclined at its end to provide for difference in height caused by the wearing away due to the traffic passing over the main-line rail and the supporting plate or filling-piece *f*; also to ensure the passage of the wheels over the crossing-line *b* without jarring, provided the shifting-piece is not in proper position to complete the crossing-line. Figures 22^x to 25^x show the shifting-piece in its lowered position and other parts in conjunction therewith. It will be seen by reference to figures 26^x to 28^x that the inner face of the end of the said shifting-piece *e* is so inclined or bevelled as to ensure the efficient action of the flanges of the wheels passing on the main-line *a*, provided such shifting-piece be improperly adjusted. The filling-piece *f* shown in figures 20^x and 29^x has inclined ends to prevent the jarring of the wheels in passing over the same. Figure 30^x shows a filling-piece provided with a detachable plate *f'* secured in position by bolts, spikes, or otherwise, the said plate being inclined at its ends. Figures 31^x and 32^x show a modified form of the said filling-piece which is provided with a T-shaped detachable plate, *f'*, secured to the same by pins or cotters f^2. Figures 33^x shows the filling-piece provided with another form of detachable plate, also secured in position by pins or cotters. These plates when worn can be readily replaced without renewing the main body of the filling-piece.

Figures 42^x, 43^x, and 44^x represent improved means for permitting the free and easy adjustment of the shifting-piece *e* when adapted to be raised or lowered or combined with rockers; e^4 is a plate or bracket secured to the shifting-piece *e*, its lower end being so formed as to extend under the shifting-piece and into a recess g^{**} in the underside of the chair *g*, supporting the pivoted end of the said shifting-piece, the said lower end of the plate e^4 preventing undue endwise movement of the said shifting-piece; g^* represents a projection extending towards the surface of the crossing-line *b*, and in order to secure the latter and support the end of the piece *e*, I insert a plate or block, g^3, which is wedged between the aforesaid projection g^*, and the crossing-rail *b* and shifting-piece *e*. The plate g^3 may extend to the surface of the rail and lap the joint of the shifting-piece *e*, and extend under the head of the rail *b*; the plate g^3 when employed in combination with a wedge is preferably formed with projections as shown in side elevation in figure 45^x, or is placed in a recess which prevents its endwise movement. The said plate g^3 in combination with a wedge is also applicable when the pivot point of the shifting-piece is above the surface of the chair on which the said piece is supported, or the plate may be so formed as to engage in a recess in the shifting-piece, or a projection may extend into or around the plate from said shifting-piece. Instead of arranging the plate or bracket to enter a recess in the chair as above described, I may in some cases pass a pin, g^4, through the said chair as shown in figure 46^x into the said plate or bracket, or I may form a projection on the said bracket extending downwards into a recess or slot provided for the same.

Figures 59^x, 60^x, and 62^x illustrate in transverse section a shifting-piece *e*, similar to that shown in figures 7^x and 8^x, and provided with a rocker, the said sections being taken on the lines *y y z z* and z^1 z^1, of figure 7^x, the said shifting-piece being shown in its lowest position; *j* represents a bracket or support for the rocker *k*, the said rocker being connected to the shifting-piece *e* by means of a bar, lug, or clamp, *l*; *m* represents the connecting-rod attached to or combined with the said rocker. It will be seen by reference to figure 59^x that the shifting-piece *e* is supported on the chairs provided for it when adjusted away from the main-line or rests upon chairs or supports, thereby relieving the rocker of strain. Figure 61^x shows in section on the same plane as figure 60^x, the shifting-piece *e*, adjusted to complete the crossing-line. It will be seen that the said shifting-piece is supported upon the filling-piece *f* and the main-line-rail *a*, thus relieving the rocker of any strain.

In figures 63^x and 64^x, which are a transverse section and side elevation, the rocker *k* is provided at its extremity with a ball, *k'*, which fits a socket, *j'*, in the lower end of the bracket *j*, the said ball preferably resting upon a spring or other elastic support in the said socket, to prevent straining the rocker, and to compensate for the wearing away of the main-line rail *a* and filling piece *f*, and also to facilitate the automatic adjustment of the said shifting-piece from the main line.

In figure 65^x I have shown a rocker *k*, forked at its lower end to rest upon a saddle provided on the bracket *j*, the connecting rod *m* being connected to the shifting-piece through the medium of the lug or clamp *l* and the connecting-rod *m*, combined with the rocker at or near its end, to provide for easier adjustment of the shifting-piece *e*. The said connecting-rod, as shown, is provided with eyes or rings, into or with which corresponding circular hooks of the rocker *k* and clamp *l* engage.

The said clamp *l* is secured to the shifting-piece *e* by means of a wedge, *l'*. The rod *m* provides a yielding support, to prevent breaking or straining of the parts.

Figure 66^x shows the rocker *k* provided with extensions or arms fitting over the saddle j^2, the said arm alternately resting upon the supports provided for them, said supports being secured to the brackets, one on each side of the projection or saddle j^2. By this arrangement I am enabled to employ a short rocker *k*, and to secure greater ease of adjustment.

Figure

Figure 67ˣ shows the rocker k provided with lateral projections k^2, resting in a socket on the bracket j, by which means similar advantages are gained in the adjustment as described in connection with figure 65ˣ.

In figures 68ˣ and 69ˣ I have shown in transverse section, in different positions, the rockers k, provided at its extremity with a wheel or roller k^3, which is arranged to traverse a cam-faced piece or support, n, attached to the sleeper. The shifting-piece e is supported upon the chairs when in the position shown in figure 68ˣ, and by the main-line rail a and filling-piece f when in the position shown in figure 69ˣ, and thereby relieves the rocker and wheel as above described in connection with figures 59ˣ, 60ˣ, and 61ˣ. The said rocker k is limited in its movements by means of stops, lugs, or projections, so as to ensure free movement of the wheel or roller k^3.

Figure 70ˣ shows the cam-faced piece or support n, mounted upon an elastic bed j^*, supported by the bracket j. It will be seen that these brackets for supporting the rockers are secured to the filling-piece f, or to both the filling-piece and main-line rail a, and held firmly in position by means of wedges j^3, such wedges being secured from displacement by means of cotters or screw-bolts.

Figure 71ˣ shows the wheel or roller k^3, journalled upon the connecting-rod m, and provided with a tripper or rocker m', which causes the raising of the shifting-piece e, and also of the wheel k^3. The said wheel k^3 being raised out of its recess, passes on the cam-faced support n, the wheel then supporting the shifting-piece until the said wheel is relieved of its weight by passing into the recess at the other end of the cam-faced plate n, the tripper m' then occupying a reverse position to that occupied by it at the commencement of the movement of the shifting-piece e. The said tripper will then effect the raising of the shifting-piece and wheel in the first part of the re-adjustment of the same to its former position.

Figures 75ˣ and 77ˣ show an ordinary switch provided with my improved means for facilitating the adjustment and obviating friction of the same, and also means for preventing the raising of the switch-rails when completely adjusted to either line. The rockers or rollers are provided with balls k', k', at their lower extremities, fitting in the sockets g' attached to the sleeper, as described in connection with shifting-piece e at crossing. o o are plates to which said rockers or rollers are attached, the said plates being provided with an inclined or curved face to hold the said switch-rails firmly in position relatively to the adjacent rails. The said rockers or rollers may also be provided with a yielding or elastic bed similar to that described in connection with the shifting-piece e at the crossing, the said elastic bed permitting the switch-rails to be automatically and readily adjusted by the passing vehicles, as the elastic support will yield to the weight of the said vehicles, and allow the switch-rails to move upon the chairs instead of being raised and carried by the rockers.

The said plates o are attached to or form a part of the bar or plate o', the switch-rails being raised from the chairs during their adjustment by means of wheels or rollers o^2 in combination with the said bar o'. This bar o' will yield to the weight of the vehicles in case of improper adjustment, and allow the switch-rails to move upon their chairs.

By employing a pair of switches similar to those shown separately in figure 72ˣ and placed adjacent to each other in combination with the main-line rails a as shown in figure 76ˣ I obviate the necessity for dividing the main-line rails a and the complication of the arrangement now in ordinary use.

By suitable connections and interlocking apparatus with holding and testing devices, such as are herein described, the desired relative working of the system is ensured, as well as the signalling devices in connection therewith. Such shifting parts either of the crossing lines or of the signals, or of both, or any combination of any or all of the same, will be prevented from being moved while the train is passing by suitable connections to, or interlocked with, or by the above described locking-cord or wire. The adjustment of such shifting parts may be tested by the means above described.

I combine with the levers used for adjusting the shifting parts at switches and crossings, which afford the improved bearing surface for wheels and other levers of the series in conjunction therewith, a suitable construction and arrangement of mechanism to prevent the releasing of a lever until all such levers and their bolts shall be in their proper relative positions. Such bolts may be operated in any preferred manner by hand or treadle, and may have operative connections of any preferred construction and arrangement.

In carrying this part of the said invention into practice I employ various arrangements of mechanism. In figures 23 to 26 I have shown suitable arrangements for this purpose. In connection with the levers o is a notched plate or bar, p, which I connect to sliding-bars or rocking-shafts q, as are generally used, so that immediately a lever is moved the lug or projection o' connected with the lever causes movement of the notched-plate or bar engaging therewith, and such movement causes the sliding-bars or rockers q connected therewith to change position, and in such change offer obstruction to the adjustment of sliding-bars r controlling the movement of other levers of the series, and until such lever shall have been adjusted completely as may be desirable to secure the locking or unlocking of other levers of the series or parts in connection therewith.

When the spring-catch in connection with either of the levers o is raised sufficiently to release either of the said levers, the projection o' in connection therewith remains in the notch in the bar or plate p until the lever is started to move, and in such movement the projection o' in connection with the spring-catch or bolting apparatus (and the lever) is forced against the obstructing face upon the bar or plate p, and causes it and its connections to move so as to allow the lug or projections to pass, and the notched-bar or plate p is of sufficient length to measure the distance of the extreme movement of the lug or projection o' with which it engages, so that the projection, spring-catch, or the equivalent for bolting a lever is free to be moved, but is not released from the engaging faces or notch upon the bar or plate p until the commenced movement of the lever. By such construction and combination of the spring-catch or bolting apparatus and the lever, the bolt or catch o' must be in the proper recess or notch, or the equivalent thereof, before any antagonistic lever or part interlocked therewith can be moved. The labour of the operator is lessened; the wear by friction caused by weights and springs in combination with interlocking apparatus and the uncertainty of automatic adjustment is entirely obviated.

The figures of reference on the levers correspond with similar figures indicating the signals and cross-over roads as shown in figure 1.

The lever No. 1, connected with the up-distance signal, is controlled by the levers Nos. 2, 4, and 5.

The lever No. 2, connected with the up-line signal, is controlled by the levers Nos. 1, 4, and 5.

The

The lever No. 3, in connection with the up-starting signal, is controlled by the levers Nos. 4 and 5.

The lever No. 4, which is used to complete or interrupt the siding cross-over road, is controlled by the levers Nos. 1, 2, 3, and 5.

The lever No. 5, which is used to complete or interrupt the cross-over road for transferring vehicles from one main line to the other, is controlled by all the levers.

The levers Nos. 6, 7, and 8 connected with the down-starting signal, the down home signal, and the down distant signal respectively, are controlled by the lever No. 5.

By thus preventing the movement of a lever until some other lever or part shall have changed position and completed its necessary movement, the proper relative working of the actuating devices or movable parts in connection with the permament-way is insured, and the same results are similarly attainable through an entire system or series of levers or adjusting parts, or any desired number of the same. And by the employment of any suitable interlocking apparatus such as is herein described any desired relative working of the parts may be ensured, that is to say, that in the most complicated system of crossing-lines such as through crossings in combination with cross-over roads, or compound slips, or catch slips, or traps, or lines with a series of switchers or shifting parts, which complete or interrupt such lines at more than one point or through crossings as herein described, or a combination of any or all of the same, are worked effectively and in proper relation to the signalling devices in connection therewith or interlocked by the same.

To ensure further additional security in the adjustment and the proper relative working of the shifting parts in connection with the improved bearing surfaces according to my improved system of construction and working, I combine with such shifting parts or connections signalling and recording mechanism of suitable construction, such as is in ordinary use, or the equivalent thereof. The mechanism engages or disengages with such parts or connections of the series as to require the proper relative working of the shifting-parts of a series or system, and of a series of signalling devices in connection therewith, that is to say, the shifting-part of the track, the signals for driver, and the signals for the operation of shifting-parts of a series of systems are so interlocked as to require the proper relative working of the series or systems.

The invention claimed is,—

First—In the construction of railway-crossing lines the employment of shifting-pieces at parts where the crossing-line continues on both sides of the undivided or immovable rail or rails to be crossed in combination with switches or shifting-pieces, such as are herein described at other parts of the line, and which last-named shifting-pieces are so controlled that, in order to permit the same to be adjusted so as to complete the crossing-line, it will be necessary to cause or allow the proper adjustment of the shifting piece or pieces at the crossing substantially as described with reference to the accompanying drawings.

Second—The construction and arrangement of the shifting-pieces to complete the crossing-line where such line extends on both sides of an undivided rail, or any combination of them for the purpose specified, and substantially as illustrated in the accompanying drawings.

Third—The construction and use of the shifting-piece at the crossing, as illustrated in figures 11 to 15, or in figure 12^a, in the manner and for the purposes set forth.

Fourth—The construction of the shifting-piece, provided with a bearing surface for the tread, and with a channel or passage for the flanges of the wheels, substantially as described, and shown in figures 9, 9^a, 10, and 12^a of the annexed drawings.

Fifth—Connecting or combining with the shifting-parts of crossings such as are herein described, at the point where the crossing-line extends on both sides of the rail to be crossed, adjusting, holding, and locking mechanism to secure the proper relative working of such shifting-parts, or any switch or signal connected therewith or interlocked thereby, or interlocking therewith, that is to say, with such parts so connected or interlocked that they must occupy their proper relative positions, thereby preventing the giving of conflicting signals, or signalling contrary to the position of such shifting-parts at the crossing, substantially as and for the purposes set forth.

Sixth—The shifting-piece *e*, constructed with a bevelled or inclined face, and used in combination with a tapered rail of the side line, substantially as herein described with reference to the accompanying drawings.

Seventh—The novel construction and arrangement whereby I support and combine the main-line rail, the side-line rail, and the filling-piece, as described with reference to the accompanying drawings, and for the purpose specified.

Eighth—The construction and arrangement of the chairs or supports, provided with means for securing the end of the side-line rail *b* and the shifting-piece *e* at its pivoted end, as herein described with reference to the accompanying drawings, and for the purpose specified.

Ninth—The mechanism to raise and lower and hold the shifting-piece to obviate friction and facilitate the adjustment of the shifting piece or pieces at crossings where the frog or V-piece is ordinarily used, or of any other switch or shifting-piece connected or combined with a shifting-piece or shifting-pieces at the crossings, substantially as hereinbefore described with reference to the accompanying drawings.

Tenth—In combination with the shifting-piece *e*, the detachable plates or supports f^1, constructed and arranged substantially as described with reference to the accompanying drawings, and for the purposes specified.

Eleventh—The construction and arrangement of the shifting-piece *e*, in combination with the continuation of the crossing-line *b*, on one or both sides of the undivided rail *a*, whereby I provide inclined surfaces at these parts as above described with reference to figure 21^x and other figures of the accompanying drawings, and for the purposes specified.

Twelfth—

Twelfth—The combination and arrangement of the switch-rails and other parts, whereby the movement or adjustment of the said rails by the switchman when no vehicle is on them is facilitated, and whereby I provide for the adjustment of such rails by the wheels of passing vehicles, substantially as described with reference to the accompanying drawings.

Thirteenth—The arrangement of a pair of switch-rails, *c d*, as shown in figure 76[x], placed adjacent to each other, in combination with the main-line rails *a*, substantially as described, and for purposes specified.

Fourteenth—The interlocking apparatus or mechanism, constructed substantially as shown in figures 23 to 26, for securing the proper relative working of switches and signals, and parts in connection therewith, in the manner above set forth.

In witness whereof, I, the said Joseph Stokes Williams, have to this my specification set my hand and seal, this twenty-eighth day of October, one thousand eight hundred and seventy-nine.

JOSEPH STOKES WILLIAMS.

Witnesses—

Signed and sealed by the said Joseph Stokes Williams, in the presence of—

ROBERT ADAM GUNN,
115, St. Vincent-street, Glasgow.

JAMES SMITH BEGG,
115, St. Vincent-street, Glasgow.

This is the specification, marked A, referred to in the annexed Letters of Registration granted to Joseph Stokes Williams, this fifth day of May, A.D. 1880.

AUGUSTUS LOFTUS.

REPORT.

Sir, Sydney, 7 April, 1880.

We do ourselves the honor to state that we are of opinion that Letters of Registration may be issued in favour of Mr. Joseph Stokes Williams, for "Improvements in Railway Crossings and Switches, and in Apparatus to be used in connection therewith," in accordance with the Petition, specification, drawings, and claim, transmitted for our report under your blank cover communication of the 28th February, No. 80/1,685.

We have, &c.,
GOTHER K. MANN,
JOHN WHITTON.

The Principal Under Secretary.

[Drawings—nine sheets.]

Fig. 1.

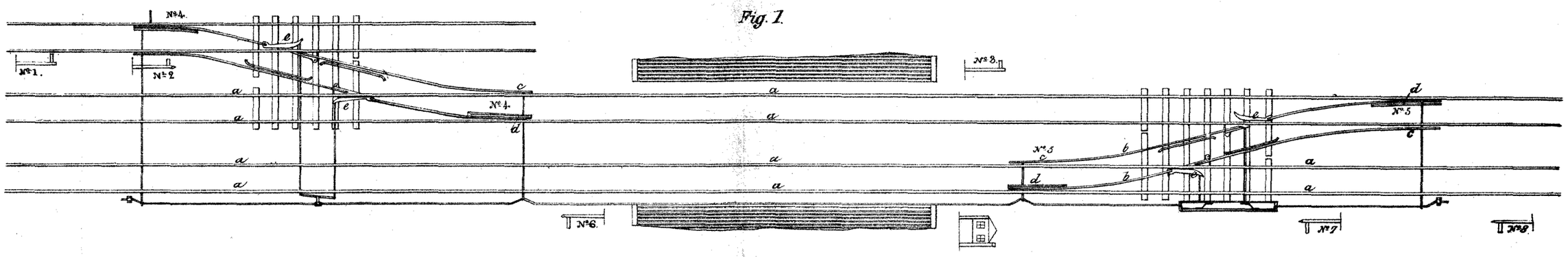

Fig. 22.

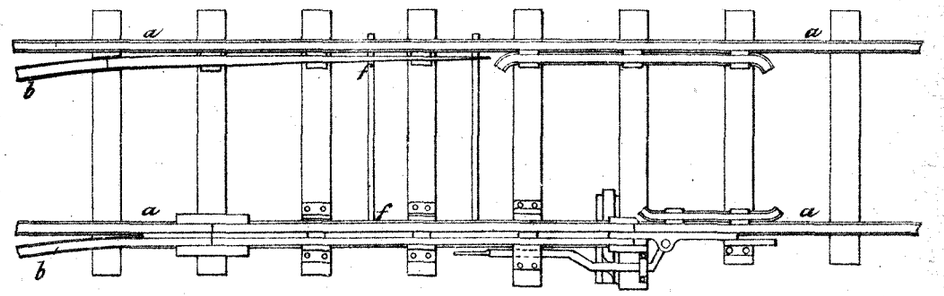

Fig. 18.

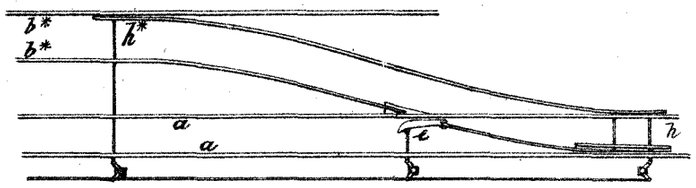

Fig. 19.

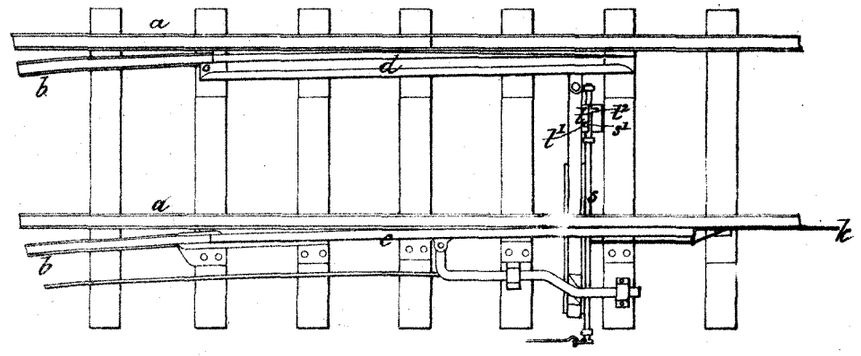

Fig. 20.

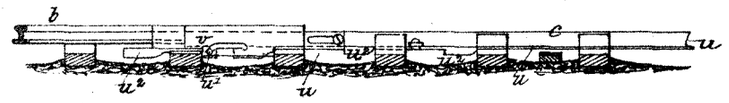

Fig. 17.

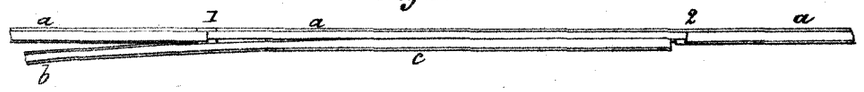

This is the Sheet of Drawings marked "B" referred to in the annexed Letters of Registration granted to Joseph Stokes Williams this fifth day of May — AD 1880.

"Augustus Loftus"

PHOTO-LITHOGRAPHED AT THE GOVT. PRINTING OFFICE, SYDNEY, NEW SOUTH WALES.

(Sig: 357)

C

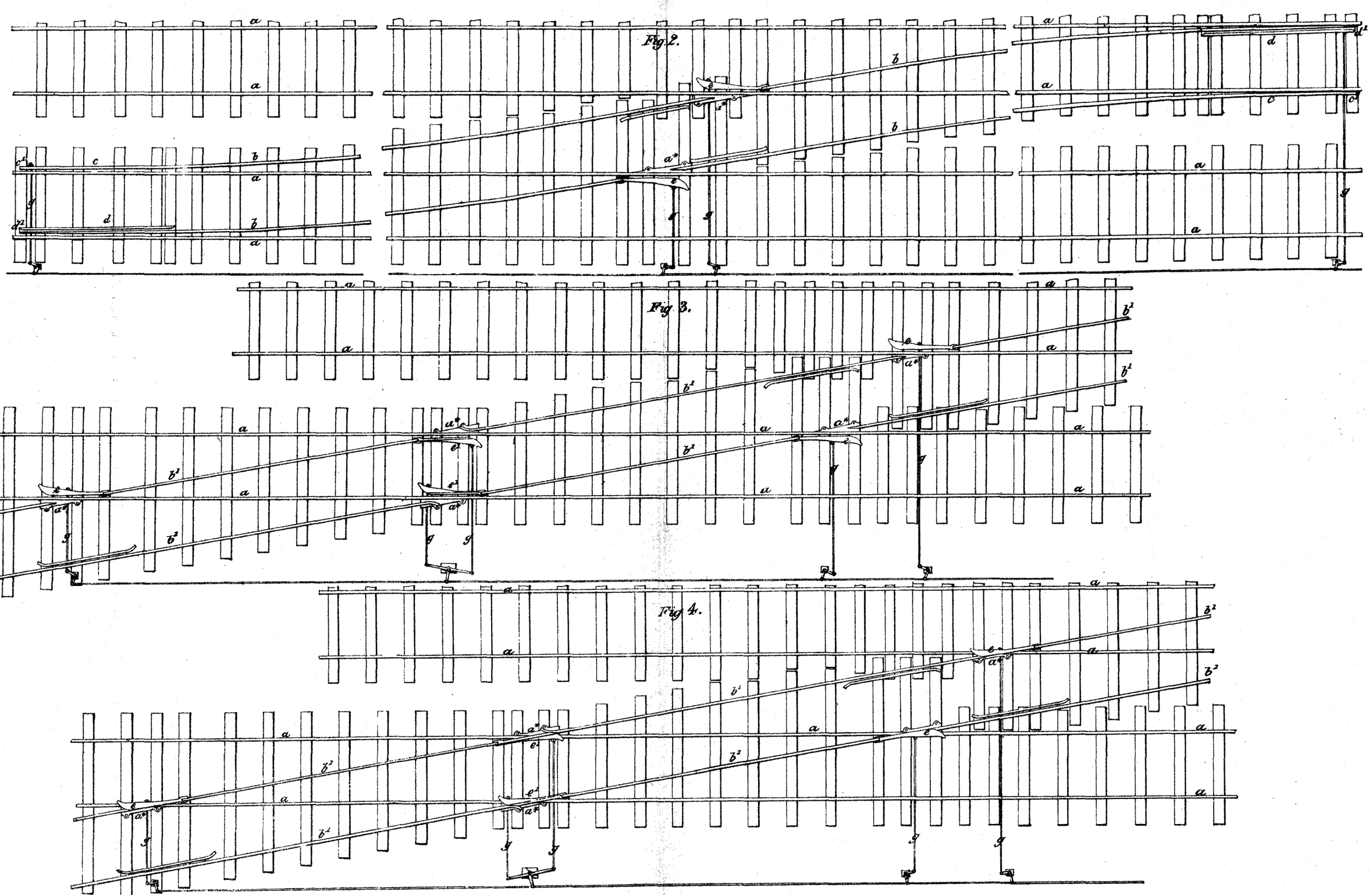

This is the Sheet of Drawings marked "C" referred to in the annexed Letters of Registration granted to Joseph Stokes Williams this 5th — — day of May — A.D. 1880.

"Augustus Loftus"

(Sig. 357)

PHOTO-LITHOGRAPHED AT THE GOVT. PRINTING OFFICE, SYDNEY, NEW SOUTH WALES.

D

Fig. 7

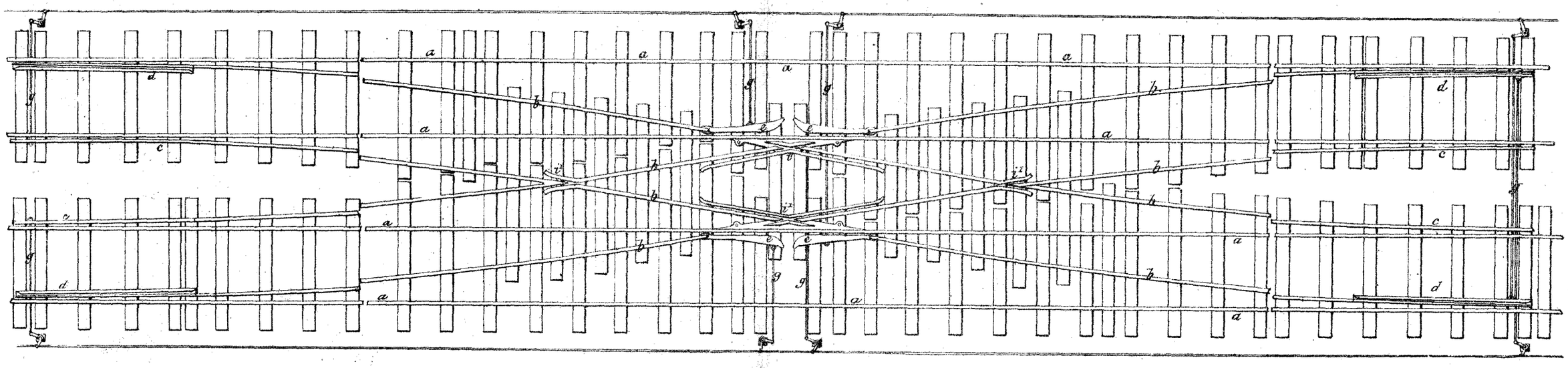

Fig. 5.

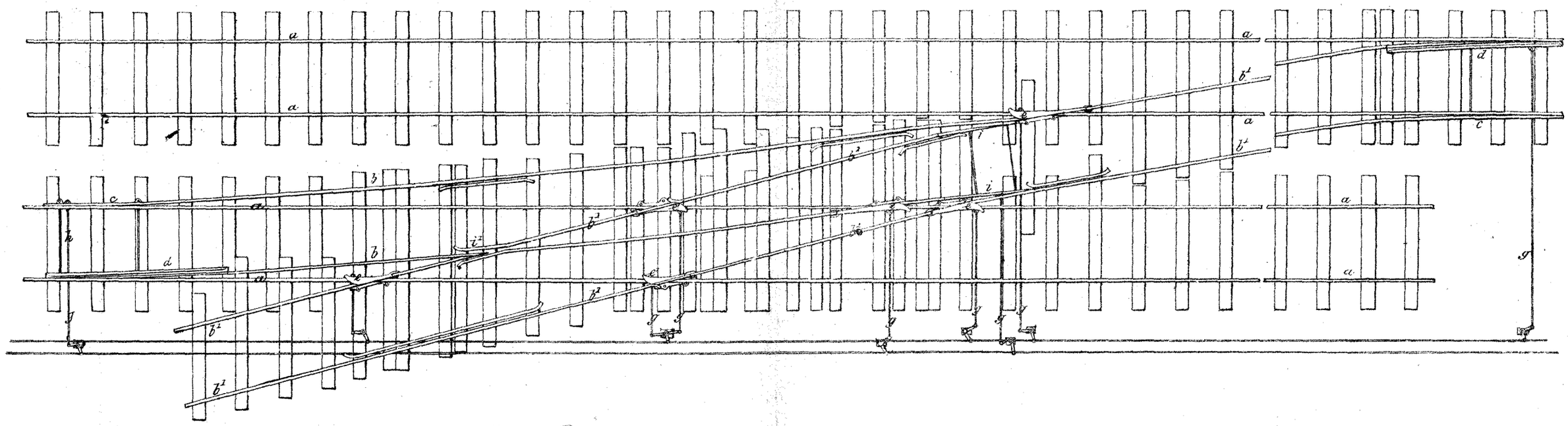

This is the Sheet of Drawings marked "D" referred to in the annexed Letters of Registration granted to Joseph Stokes Williams this fifth — — day of May — AD 1880.

(Sig. 357-)

PHOTO-LITHOGRAPHED AT THE GOVT. PRINTING OFFICE, SYDNEY, NEW SOUTH WALES.

Augustus Loftus

E

Fig. 6

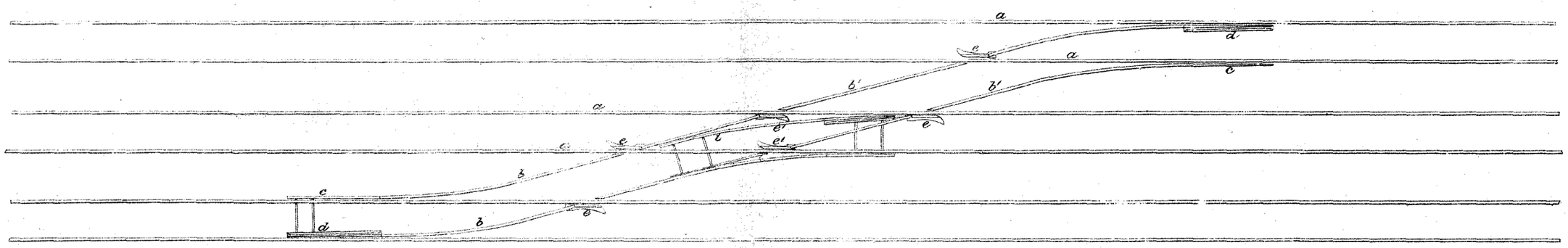

Fig. 9

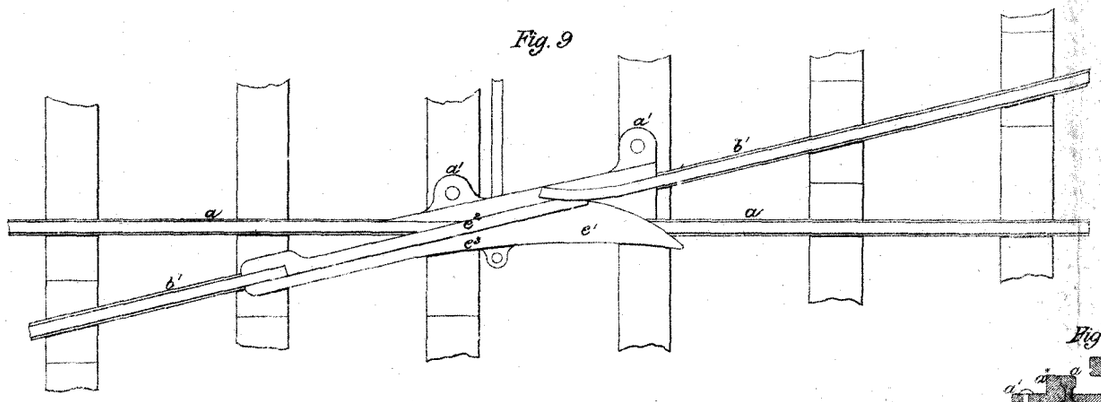

Fig 10

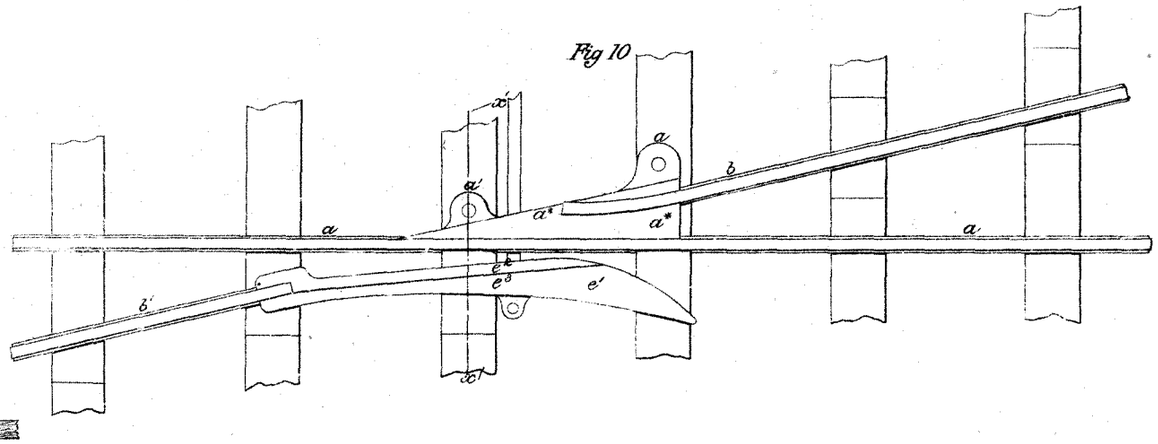

Fig 9a

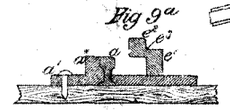

Fig. 21

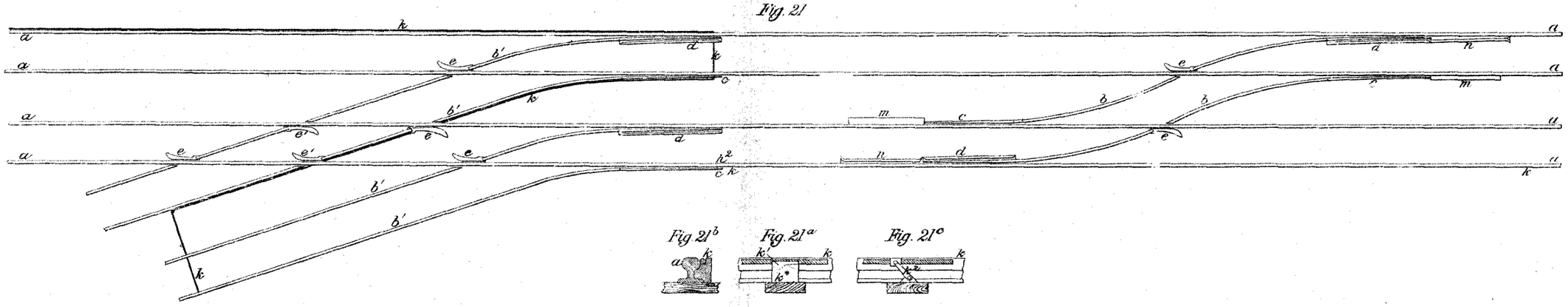

Fig. 21b

Fig. 21a

Fig. 21c

This is the Sheet of Drawings marked "E" referred to in the annexed Letters of Registration granted to Joseph Stokes Williams this fifth — day of May — AD 1880.

"Augustus Loftus

(Sig. 357-)

PHOTO-LITHOGRAPHED AT THE GOVT. PRINTING OFFICE, SYDNEY, NEW SOUTH WALES.

F

Fig. 11.

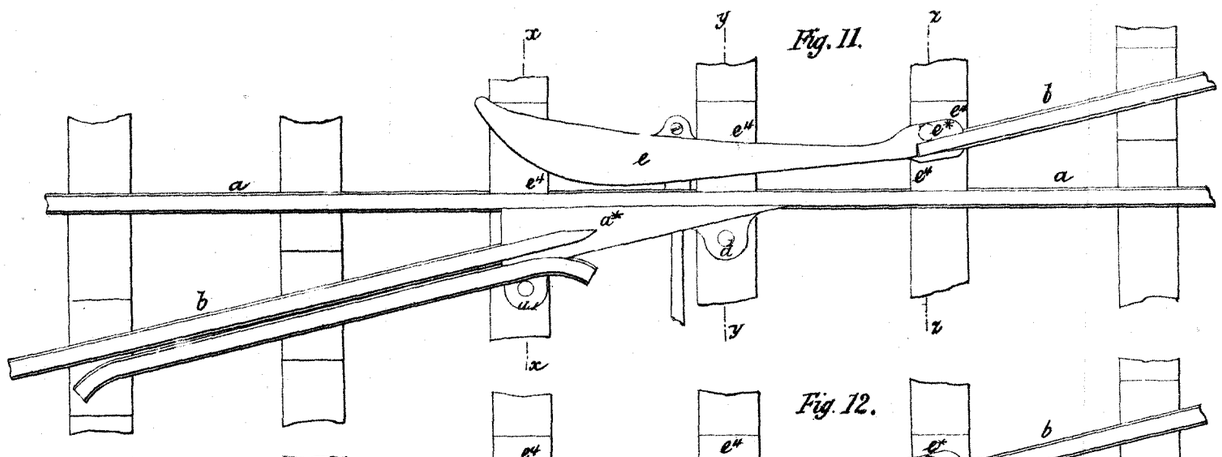

Fig. 12.

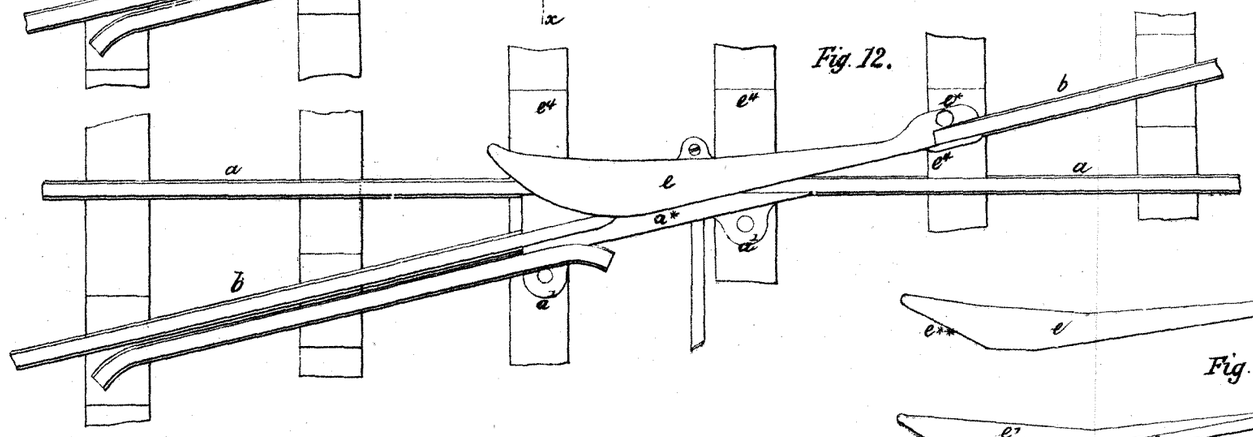

Fig. 12a

Fig. 13.

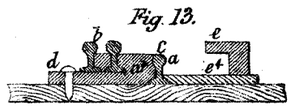

Fig. 14

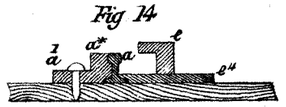

Fig. 15

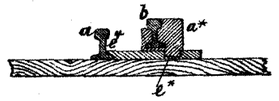

Fig. 16.



Fig. 8.

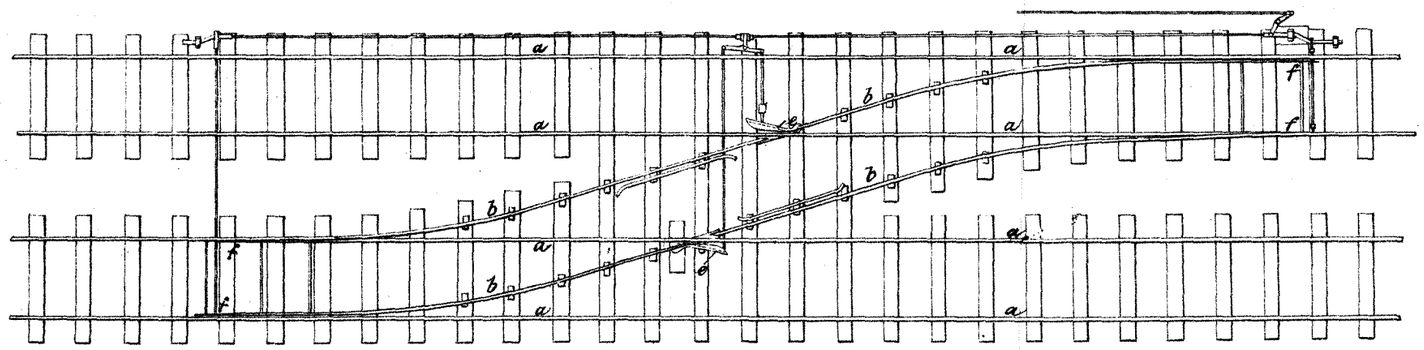

This is the Sheet of Drawings marked "F" referred to in the annexed Letters of Registration granted to Joseph Stokes Williams this fifth — day of May — A.D. 1880

"Augustus Loftus"

PHOTO-LITHOGRAPHED AT THE GOVT. PRINTING OFFICE, SYDNEY, NEW SOUTH WALES.

(Sig-351-)

G

Fig 10.b

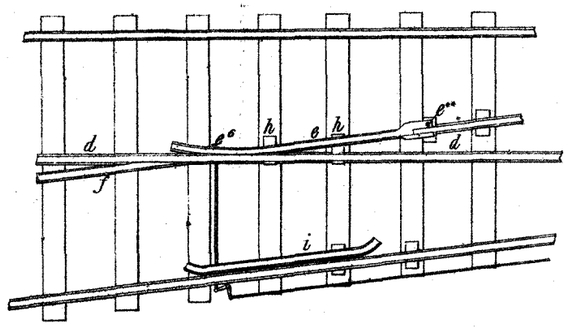

Fig. 9.b

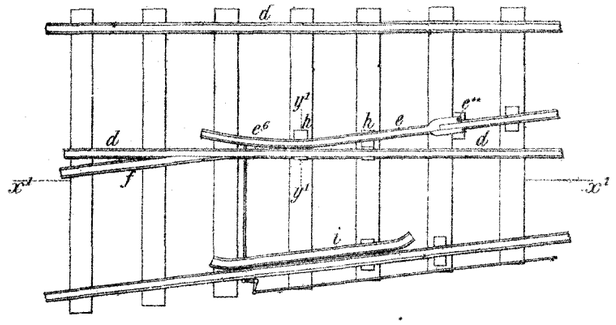

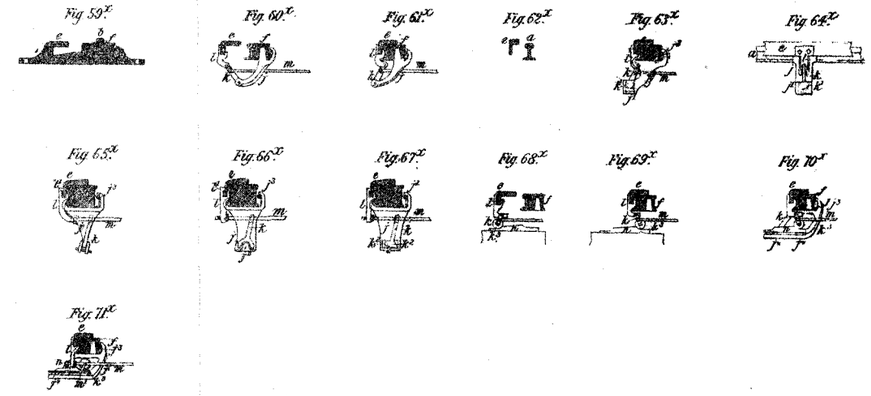

Fig. 11.b

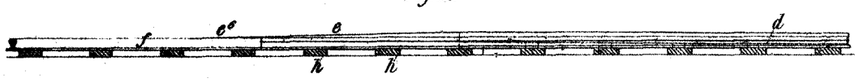

Fig. 12.b



Fig. 72.x

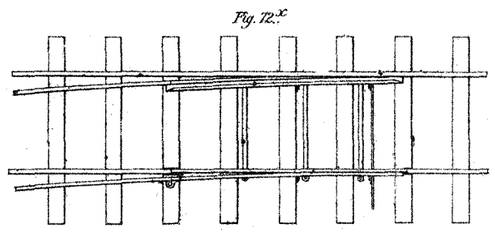

Fig. 77.x

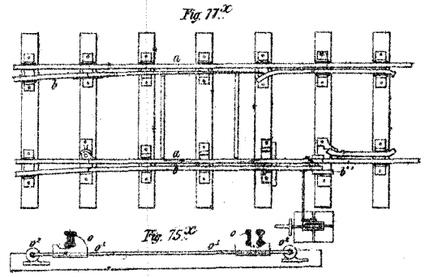

Fig. 75.x

Fig. 76.x

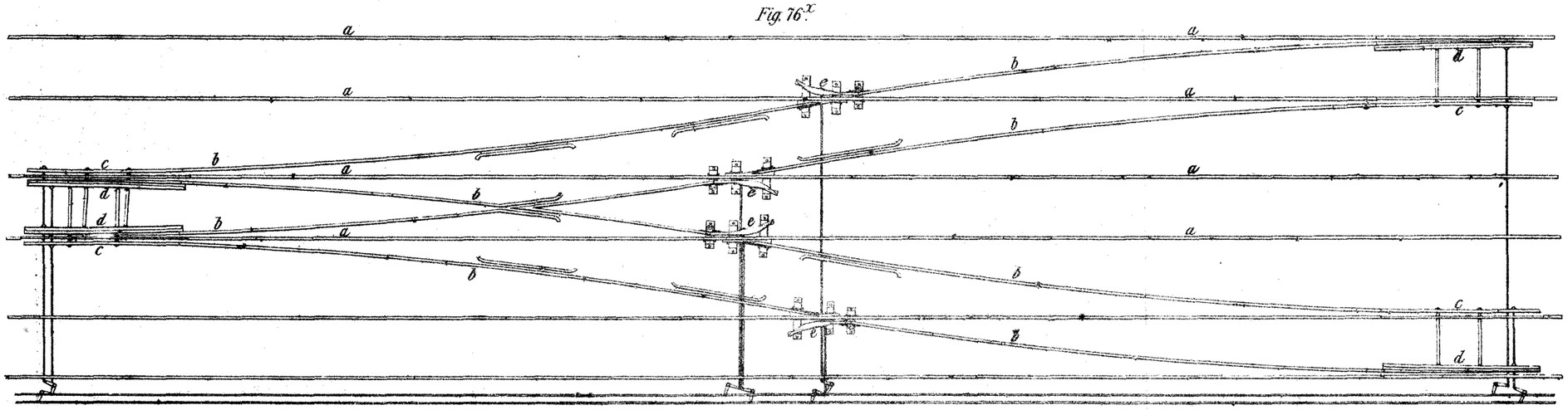

This is the sheet of Drawings marked "G" referred to in the annexed Letters of Registration granted to Joseph Stokes Williams this fifth — — day of May - A.D. 1880.

Sig. 357)

"Augustus Loftus"

PHOTO-LITHOGRAPHED AT THE GOVT. PRINTING OFFICE, SYDNEY, NEW SOUTH WALES.

H

[824]

Fig. 7.x

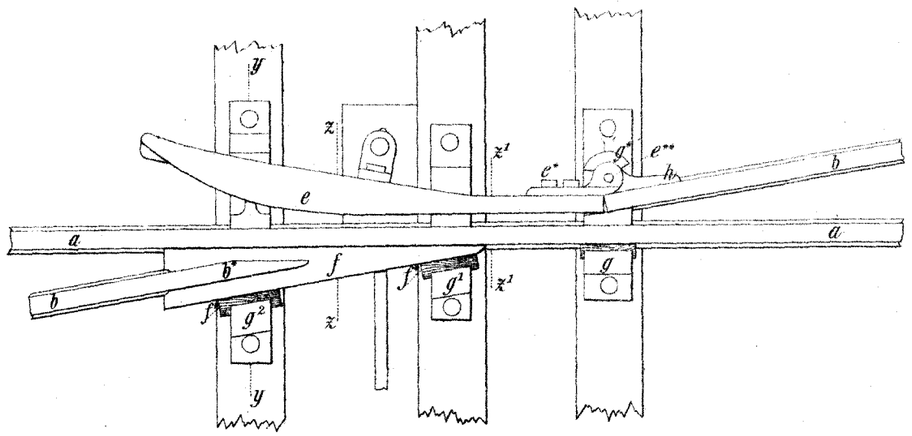

Fig. 8.x

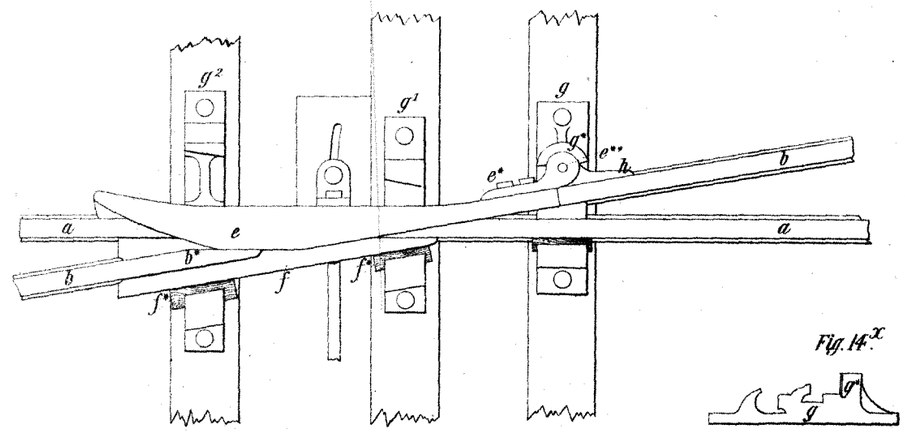

Fig. 13.x

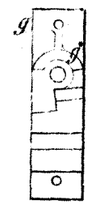

Fig. 14.x

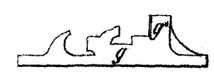

Fig. 9.x

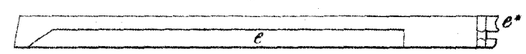

Fig. 12.x

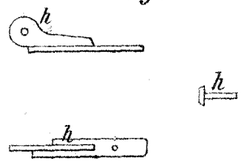

Fig. 10.x

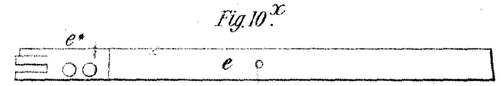

Fig. 11.x



Fig. 16.x

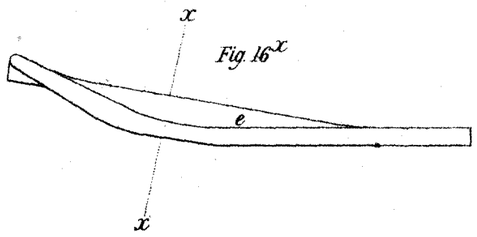

Fig. 17.x



Fig. 18.x

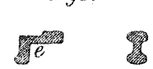

Fig. 31.x

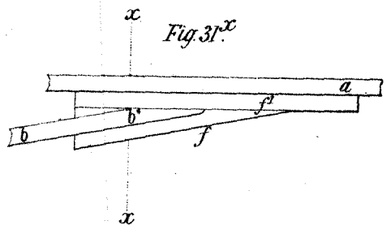

Fig. 32.x



Fig. 33.x



This is the Sheet of Drawings marked "H" referred to in the annexed Letters of Registration granted to Joseph Stokes Williams this Fifth — day of May — AD 1880

(Sig. 357—)

Augustus Loftus.

PHOTO-LITHOGRAPHED AT THE GOVT. PRINTING OFFICE, SYDNEY, NEW SOUTH WALES.

I

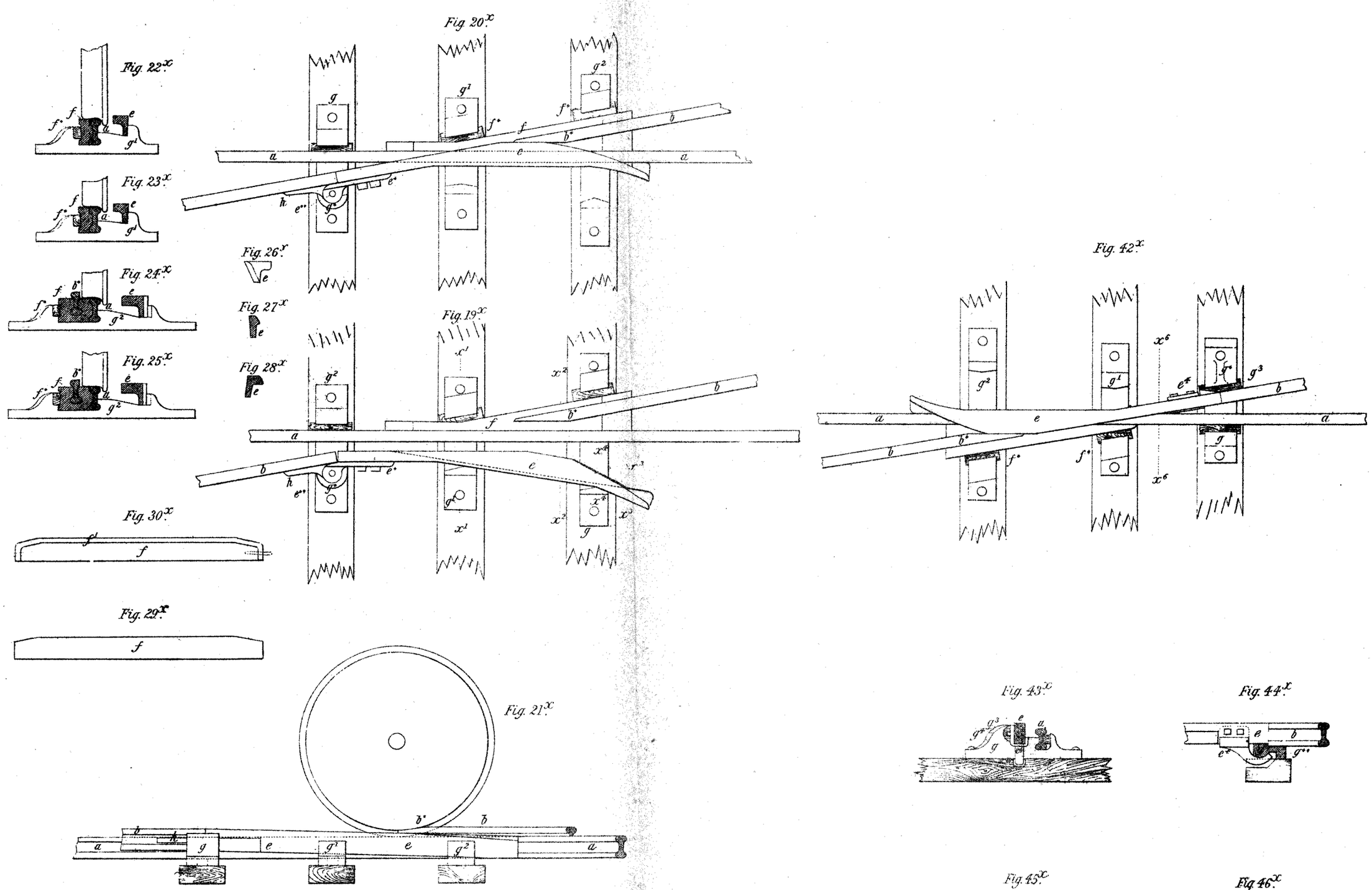

This is the Sheet of Drawings marked "I" referred to in the annexed Letter of Registration granted to Joseph Stokes Williams this Fifth — day of May AD 1880.

"Augustus Saffus"

(Sig. 357)

PHOTO-LITHOGRAPHED AT THE GOVT. PRINTING OFFICE, SYDNEY, NEW SOUTH WALES.

J

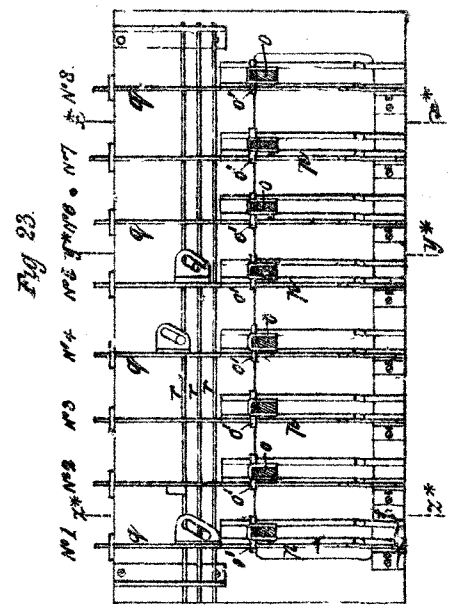

Fig 23.

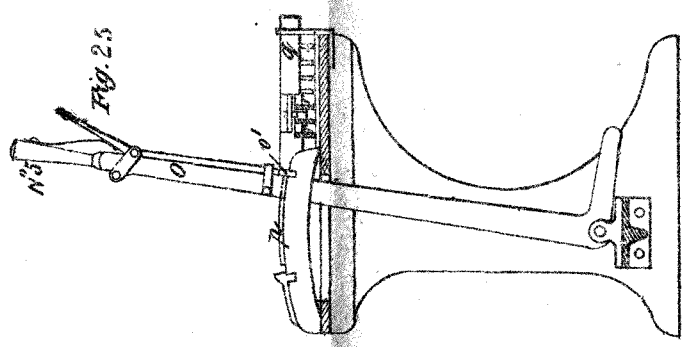

Fig. 25

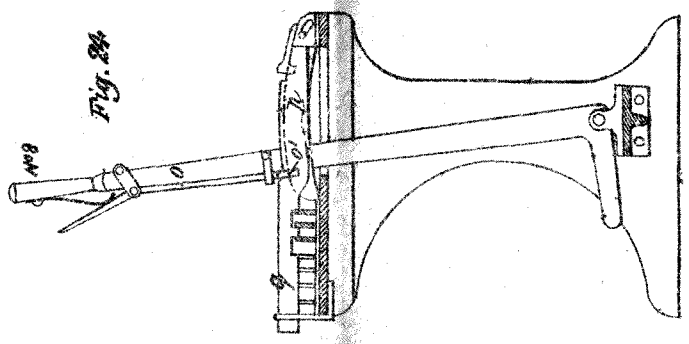

Fig. 24

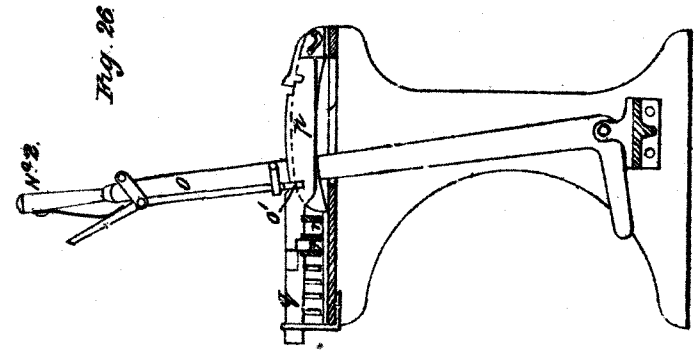

Fig. 26

This is the Sheet of Drawings marked "J" referred to in the annexed Letters of Registration granted to Joseph Stokes William this fifth day of May 1880.

"Augustus Loftus."

(Sig. 351-)

A.D. 1880, *7th May.* No. 825.

IMPROVEMENTS IN THE MANUFACTURE OF GAS, &c.

LETTERS OF REGISTRATION to Henry Yarwood Attrill and William Farmer, for Improvements in the manufacture of Gas for heating and illuminating purposes, and in the means and apparatus connected therewith.

[Registered on the 8th day of May, 1880, in pursuance of the Act 16 Vic. No. 24.]

BY HIS EXCELLENCY THE RIGHT HONORABLE SIR AUGUSTUS WILLIAM FREDERICK SPENCER LOFTUS (commonly called LORD AUGUSTUS LOFTUS), Knight Grand Cross of the Most Honorable Order of the Bath, a Member of Her Majesty's Most Honorable Privy Council, Governor and Commander-in-Chief of the Colony of New South Wales and its Dependencies.

TO ALL TO WHOM THESE PRESENTS SHALL COME, greeting:

WHEREAS HENRY YARWOOD ATTRILL and WILLIAM FARMER, both of the city and county of New York, in the State of New York, one of the United States of America, have by their Petition humbly represented to me that they are the authors or designers of a certain invention or improvement in manufactures, that is to say, of an invention of "Improvements in the manufacture of Gas for heating and illuminating purposes, and in the means and apparatus connected therewith," which is more particularly described in the specification, marked A, and the three sheets of drawings, marked B, C, and D, respectively, which are hereunto annexed; and that they, the said Petitioners, have deposited with the Honorable the Treasurer of the said Colony of New South Wales the sum of Twenty Pounds sterling, for defraying the expense of granting these Letters of Registration, as required by the Act of Council, sixteenth Victoria, number twenty-four; and have humbly prayed that I would be pleased to grant Letters of Registration, whereby the exclusive enjoyment and advantage of the said invention or improvement might be secured to them for a period of fourteen years: And I, being willing to give encouragement to all inventions and improvements in the arts or manufactures which may be for the public good, and having received a report favourable to the prayer of the said Petition, from competent persons appointed by me to examine and consider the matters stated therein and to report thereon for my information, am pleased, with the advice of the Executive Council, and in exercise of the power and authority given to me by the said Act of Council, to grant, and do by these Letters of Registration grant unto the said Henry Yarwood Attrill and William Farmer, their executors, administrators, and assigns, the exclusive enjoyment and advantage of the said invention or improvement, for and during the term of fourteen years from the date hereof; to have, hold, and exercise unto the said Henry Yarwood Attrill and William Farmer, their executors, administrators, and assigns, the exclusive enjoyment and advantage thereof, for and during and unto the full end and term of fourteen years from the date of these presents next and immediately ensuing, and fully to be complete and ended: Provided always, that if the said Henry Yarwood Attrill and William Farmer shall not, within three days after the granting of these Letters of Registration, register the same in the proper office in the Supreme Court, at Sydney, in the said Colony of New South Wales, then these Letters of Registration, and all advantages whatsoever hereby granted, shall cease and become void.

In witness whereof, I have hereunto set my sign manual, and have caused the present Letters of Registration to be sealed with the seal of the said Colony of New South Wales, at Government House, Sydney, in New South Wales, this seventh day of May, in the year of our Lord one thousand eight hundred and eighty.

[L.S.] AUGUSTUS LOFTUS.

Improvements in the manufacture of Gas, &c.

A.

SPECIFICATION FOR PATENT.

Inventors: HENRY YARWOOD ATTRILL and WILLIAM FARMER, both of the city and county of New York, in the State of New York, one of the United States of America.

Title of Invention: Improvements in the manufacture of Gas for heating and illuminating purposes, and in the means and apparatus connected therewith.

ONE of the best modes of manufacturing gas from coal is to cause it to descend slowly in a vertical retort, properly heated, supplying fresh material at the top and taking away the coke at the bottom. We adopt that general plan.

We propose to carry the distillation much further than has been usually practised; employing for heating purposes the poor hydrocarbon gas which is distilled off at the later stages, mingled with products of combustion peculiarly worked so as to produce a combustible gas known as carbonic oxide.

In what we consider the best manner of working, we consume all or a large portion of the coke immediately in the same apparatus; in short, we utilize some or all of the residuum from the manufacture of illuminating gas in the production of a different and inferior kind of gas instead of removing it as coke.

In carrying out our invention, we can use as the material a suitable quality of coal or other solid gas-producing material; or we can use petroleum or other fluid having the requisite gas-producing qualities, by using with the latter a sufficient quantity of solid material to support it and cause it to work down slowly with the solid matter. We will describe the operation as conducted with good gas-producing coal, slowly descending and changing to coke in a smooth, vertical chamber, which we will term the retort. We provide for intensely heating the retort quite to the top, by making an annular chamber around an interior lining between the retort and the outer masonry, and circulating therein a current of heating gas, received from below, with a sufficient supply of hot fresh air to induce combustion at the point where it is needed. Both the heating gas and the air supplied thereto being previously heated, the resulting condition is a very high temperature, so that the distillation of the coal commences in the top, and proceeds actively, and the coal becomes coked rapidly in its descent.

We divide the gas, taking the earlier and richer into one receptacle, and the later and poorer for immediate use into another receptacle.

The delivery or exit for the rich gas is at a higher point in the retort than the exit for the poorer gas and for the products of combustion.

The perfection to which the construction and operation of the well-known devices termed exhausters have been carried allows us to maintain on each delivery pipe exactly the desired amount of pressure or vacuum. By a judicious operation of one exhauster, we maintain a pressure in the upper part of the retort so nearly that of the atmosphere that the top may, with some success, be left entirly open for charging; and by another exhauster or by a carefully adjusted valve, or other suitable means, we control the passage from the fire, at the base of our retort, through the flues to a suitable tall chimney, and thus regulate the pressure or draught so as to maintain a neutral zone between the two levels of delivery, keeping it at as near a uniform level as is practicable. The coal, while above that zone, delivers its rich gas into the upper delivery passage. After descending below that zone the coal, now nearly reduced to coke, delivers its last instalments of gas into the lower delivery passage. The coal, or we will now call it coke, continues to descend, being now near the base of the retort, in the part which we term the "furnace." As it approaches the grate which forms the bottom of the furnace, it begins to find atmospheric air rising up through the interstices, and consequently begins to burn. As this proceeds, the material, instead of any longer absorbing heat, as in the act of being distilled to give off gas, now begins to produce heat by burning, and may be ultimately all consumed upon the grate.

We propose by blowing to force the fresh air up through the dense mass of coke, if it shall be required, or to restrain the flow of air if it shall enter too freely in any case, so as to always afford the proper limited supply of air to produce carbonic oxide, the carbon of the coke having assumed the gaseous form while receiving only half the oxygen required for complete combustion.

Roughly estimated, the gas from our furnace contains about ten (10) per cent. of gas, largely hydrogen, from the last of the volatile matter in the coal; thirty (30) per cent. of carbonic oxide, resulting from the union of oxygen of the admitted air with the carbon of the coke, and the remainder inert nitrogen. This mixture we term "furnace gas"; it is capable of burning, and is valuable as a fuel or heating gas for any purposes in the art where heat with little light is required.

By our method, as by other approved modes of manufacture, a quantity of fuel equal to from 20 to 25 per cent of the coke produced is required to be burned to produce the requisite heat for the development of the volatile matter in the gaseous form. It will be seen that in our apparatus the heat required to extract or distil off the gas from the material at the last stages is derived directly from the fire produced by the burning of the solid material just below it; in other words, the fire into which it is moving heats it intensely and drives out the last remaining gas.

The heat to drive out or distil off the gas at the earlier stages must be applied near the top of the retort; it is produced by burning around it some of the furnace gas produced below. The proportion of furnace gas required for this purpose is taken there and burned without losing its original heat. The remainder of the furnace gas is, like the illuminating gas, conducted away in a separate pipe, and cooled and stored away for other uses, or for the same use at a subsequent period.

We provide for receiving and heating the air which is required for the burning of the furnace gas. The air is heated by leading it through flues adjacent to the furnace. The admission of the hot air to the hot combustible furnace gas produces a long and intense flame, which we cause to heat the entire middle and upper portion of the retort.

The material lining the upper part is by preference fire-clay, made in the form of short lengths of tube, matched tightly together, and steadied in the required position by curved blocks or chocks, resting on shoulders and bracing their outer surfaces against the interior of the surrounding masonry. These chocks are formed with liberal openings, to allow the hot gas to rise freely.

Each

Each section of the tube forming the internal chamber may, for small retorts, be made in one piece; for larger ones we propose to make each in four or other number of pieces, fitted together. The grate may be of any ordinary construction. We provide facilities for shaking the grate-bars.

In one form of the apparatus the central vertical chamber is enlarged a little above the grate. In this place the partial combustion, the manufacture of the carbonic oxide, is mainly effected; a little higher it is slightly contracted. Above this is a considerable length of straight, vertical, round, smooth retort, gradually decreasing upwards. The top is surmounted by a casting, and has by preference the feeder described further on, but it may have an ordinary well-fitting lid, or any other suitable provision for making an approximately gas-tight joint, to be opened at short intervals to add more coal as the mass sinks. The top may, with proper care, be allowed, as above stated, to remain open. We prefer to employ a thick mass of masonry exterior to the fire-brick, to well retain the heat and prevent its escape by radiation.

Such portion of the furnace gas as can be spared for other uses is subtracted and led away; the remainder flows upward into a chamber, where it combines with the hot air supplied, and is thereby completely burned. The intense flame flows up through the annular space surrounding the upper portion of the retort, and supplies heat liberally thereto, to distil off the rich gas.

The volatile matter which is given off by the freshly-charged coal thus heated at the extreme upper portion of the apparatus is, by the action of the exhauster, drawn gently downwards, and being compelled to pass through the more intensely heated portion below, becomes thoroughly fixed and mixed with the products of a later distillation, so as to deliver the best illuminating gas, of a practically uniform quality. This flows out through the radial passages, formed by suitable fire-clay tubes traversing the combustion chambers, and is delivered into pipes not shown, by which it may be conducted away to an hydraulic main, and subjected to any ordinary or suitable provisions for condensing, purifying, distilling, &c., and be stored for use in lighting factories, towns, &c., being in all respects like other good illuminating gas. We provide for allowing a portion of the coke to be withdrawn by means of the passages through which the illuminating gas is delivered, employing an endless screw, with provisions for moving it in and out, as well as rotating it at proper intervals; but when much coke is to be removed, we prefer the modification of the apparatus described further on.

There are five principal zones in this retort or stack. The upper is the charging and heating zone; the next is the distilling zone for distilling off illuminating gas, which is drawn out through suitable passages; the third is the neutral zone, where the gas being distilled off, divides, all above going with the illuminating gas, and all below going with the heating or furnace gas; the fourth is the distilling zone for poor hydro-carbon gas, immediately above the fire; and the last and lowest is the partially oxidising zone, where the remaining material is burned into carbonic oxide.

The accompanying drawings represent what we consider the simplest means of carrying out the invention.

Fig. 1 is a front elevation; fig. 2 is a central vertical section; fig. 3 is a vertical section, in a plane at right angles to that in fig. 2; figs. 4 and 5 are horizontal sections in planes marked in fig. 2; fig. 4 is on the line *p-p*; fig. 5 is on the line *q-q*.

Similar letters of reference indicate like parts in all these figures.

Referring to these figures, A is outer masonry, and M a tubular lining of fire-brick material, of considerably less diameter than the interior of A, and held annularly by chocks, N, so as to leave a space, c^3, for flame to heat the lining M and the material in the interior of the latter, which we term the retort, *m*. The lining M extends up from about the mid-height to the top. The lower end of the stack or retort serves as a furnace to burn all the coke allowed to descend into it. This part is marked *b*, and is provided with a sliding door, B, controlled by a chain, and capable of nice adjustment by any suitable feeding means not shown. This is worked so as to produce carbonic oxide.

Fresh air is admitted in liberal quantities through the tortuous flues *g*, which are so placed as to highly heat the air rising through them.

The products of combustion, with the poor gas last distilled, the mixture being termed, for convenience, furnace gas or furnace gases, are drawn out through the passage *c*, and led up through the passage c^1. The hot fresh air from *g* is allowed to mingle therewith, by flowing through the aperture g^1. The intense flame rises through the chambers c^2, and thence into the annular space c^3 before referred to. In this latter it performs the important function of communicating its heat through the thin tube-sections M to the freshly charged gas-yielding material enclosed in the latter, and flows out at the top, to be led to a chimney, either directly or through an exhauster not shown. It will be understood that the furnace gas thus serving is of two principal kinds, both derived from the material in or near the furnace *b*. One part is poor hydro-carbon gas, mainly hydrogen, derived from the coal in the last part of its distillation, the highest point from whence this gas is derived being the neutral zone, which latter may be supposed to shift slightly according to circumstances, but ordinarily to lie only a little above the level of the exits *c*. The other, and in most cases the larger part, is derived from the partial burning of the coke, the valuable part of which is carbonic oxide. Most of this comes from the near vicinity to the grate *a*.

The passages *e* are the exits for the rich illuminating gas. This takes none of the products of combustion, but receives all the gas distilled off from the material lying above the neutral zone. The gas distilled from the coal near the top descends through the interstices between the hotter or riper material below, to find these exits, *e*. Any excess of carbon in that gas is remedied by mingling with gas later formed and poorer. Any vapours given off are thoroughly decomposed by being subjected to high heat under these conditions.

Figures 6 to 17 show a modification, in which we allow a longer time for the expulsion of the gas from the coke which is to be removed, and provide more conveniently for its removal. In this form of the apparatus the retort is divided, in the lower portion, into two gradually diverging branches, each of which branches may be, and preferably is, again further divided. As the material descends, one portion passes into a branch or branches where it is supplied with air, and is burned into the feebly illuminating but highly heating furnace gas, while another portion descends into a branch where it gets no air, and is cooled and drawn out. We furnish both branches with grates, and provisions for use as furnaces when it is desired to

burn

burn all the coke that descends into both branches, so that with this apparatus, as with the form of the apparatus first described, all the material can be converted into heating gas, if desired, after the first and richest gas has been separately taken away above.

The accompanying drawings represent what we consider the best means to carry out our invention :—

Fig. 6 is a front elevation of our modified apparatus ; fig. 7 is a vertical section of the same; fig. 8 is a section on the line *r-r*, in fig. 7 ; fig. 9 is a plan view of the top of the apparatus ; fig. 10 is a horizontal section on the line *s-s*, in fig. 7 ; fig. 11 is a horizontal section, through half of the apparatus, on the line *t-t*, in fig. 7 ; fig. 12 is a horizontal section, through half of the apparatus, on the line *u-u*, in fig. 7 ; fig. 13 is a horizontal section on the line *v-v* ; fig. 14 is a section on the line *w-w*—when these are only through half of the apparatus, the other half at that level is similar ; fig. 15 is a vertical section on the line *x-x*, in fig. 8—this shows the fresh air flues ; fig. 16 is a vertical section on the line *y-y*, in fig. 7—this shows the passage through which the illuminating gas is taken away ; and fig. 17 is a vertical section, parallel to the last, but a little further inward—its plane is represented by the line *z-z*, in fig. 7.

Similar letters indicate corresponding parts to those already described.

A is substantial masonry, enclosing a central upright passage, *m*, which we term the stack or retort ; it is lined with a continuous tight wall of thin, refractory material, as fire-brick, formed as a continuous tube in large or small sections, properly joined, as may be preferred ; a space between the lining and the outer masonry serves as an annular flue to conduct the burning gases from below and supply heat to the contents at the top.

At or near the radial passages *e*, which conduct away the rich illuminating gas, the descending material divides ; one portion descends into the furnace *b*, and is burned with a limited supply of air, making heating gas in the bottom of the apparatus, all the solid matter moving down into this branch being burned, always excepting ashes and clinker, which may be removed as usual ; another portion of the coke descends into the other portion of the branched passage, which we will term the coke vault, from whence it is withdrawn for subsequent use.

We can make the proportion thus conducted down into the coke vault greater or less, by varying the rapidity or frequency of its removal from the latter. If much is removed from the coke vault, a large proportion will descend therein ; if little is removed from that chamber, a larger proportion will go down into the furnace ; if none at all is removed from the coke vault, it will stand idle, filled with dead coke, and will be of no effect, the whole of the descending stream of coke being led necessarily into the other, the furnace, and be consumed.

In the drawings we have shown two coke vaults, *f*, divided by a wall, A^2, at right angles to the main dividing wall A^1. We can thus divide each coke vault and each furnace into any desired number of subdivisions. Each coke vault is provided with inclined grates, f^1, which guide the coke down to the door when the coke is removed, or which allow the coke vault to be employed as a furnace whenever it is desired to so work the apparatus, that is to say, burning all the coke with a limited supply of air in both or all the chambers. It will be understood that the air-flow to and through the grate *f* is controlled by tightly fitting doors. F are the doors of the coke vault, through which coke is removed for use. Means not shown may be employed for cooling the coke either before or after its removal from the vault.

We propose to let in a little steam under the grates. In the furnace *b* it is applied under the grate, and cools it and softens the clinkers ; in the coke vault *f* it may be introduced below the grate f^1, or at any other convenient point, and will aid to quench the coke and prepare it for removal.

The feeder consists of a cast-iron cylinder, I, formed with pockets, and mounted on a shaft, *i*, with which it revolves in gas-tight contact with an outer case, J, by power received through the gear wheel K. The gear wheel is capable of turning loosely on the shaft, but engages by friction, thereby allowing for the presence without mischief of an occasional mass too hard to be passed through. The friction plate L can be tightened or released by any convenient means to regulate the frictional force.

The feeder I J may be mounted, as shown, exactly over the centre of the retort, or it may be set considerably to one side. The latter may be preferable in many cases, for the reason, amongst others, that it better allows operating from the top to clear the material in case of a jamb or obstruction.

The coal or other material may be conveyed to the feeder I J by hand, or by elevators, cars, or other machinery ; the feeder may be driven by any suitable power, and revolved continuously and slowly, or intermittently, as convenience may decide.

An index or register on the shaft *i* of the feeder or its connections may aid in determining the quantity of material consumed in any given time.

We have shaking grates in the furnace ; a similar device may be employed also on the inclined grates of the coke vault. Alternate bars of the grates are moved to and fro by means of arms, H^1, fixed on a rocking shaft, H, worked by any suitable force. Between each pair of movable grate-bars we have a stationary bar.

The clearing of the fire is largely effected by the shaking grate. Both sets of bars—those moved by the arms H^1 and those which are stationary between them—are notched or toothed, the teeth being formed with unequal sides, as shown, so that the shaking of the grate by working the shaft H works the clinkers and ashes to the front of the grate, where a small narrow passage will allow their discharge. The device in this combination serves the important end of avoiding the necessity for opening the doors wide and allowing free access of the air, as would be required for ordinary stoking.

We can use this apparatus to manufacture water gas. For thus working we can introduce the steam through one or more pipes, not shown, either at the bottom or top, and the action that ensues when the apparatus is filled with coke or analogous material is similar to that in other water gas apparatus,—the oxygen of the steam combines with the carbon, producing carbonic oxide, and the hydrogen of the steam being set free, the whole issues mechanically mingled, in good condition for use, with or without subsequent treatment. In such case we can revive the heat from time to time by shutting off the steam and by opening suitable passages, allowing fresh air to move through the mass of glowing coke, inducing ordinary combustion, and passing the gases then produced to the chimney to be discharged.

We propose sometimes to use the apparatus for making water gas, simultaneously with the manufacture of the two kinds of gas from coal ; this may be done by admitting the steam in moderate quantities, preferably

preferably at or near the bottom, and taking care not to so far cool the material as to destroy its decomposing power; in other words, the burning goes on in the lower portion of the apparatus with limited supply of air, and with sufficient steam, admitted below the grate as before suggested or otherwise, to materially contribute by its decomposition to the quantity of heating gas.

We believe we can successfully impart the heat from the flue *c* 3, so as to decompose a small quantity of steam admitted at the top of the apparatus, and caused to mingle with the rich gas; in other words, we can make water gas in a certain proportion at the same time with either or both the kinds of gas made by our apparatus worked with gas coal or analogous gas-producing material.

Other modifications may be made without departing from the principle or sacrificing the advantages of the invention. We can use some parts or features of the invention without the others.

We can manufacture gas by our method from petroleum or other gas-producing fluids, by introducing with such a sufficient quantity of solid matter of any kind, adapted to endure the heat, and either burning the solid matter in the furnace or extracting it from the vault. The solid matter may be gas-producing, as bituminous coal, or it may be non gas-producing as coke or charcoal.

The feeder, shaking grate, &c., may be used with the simple form of the apparatus shown in figures 1 to 5 if preferred.

It will be understood that we use exhausters or other devices to keep the exactly required pressure on all parts of the interior of the apparatus. We draw out the gas from the lower part of the material through the passages *c* for heating purposes, and through the apertures *e* for illuminating purposes, at such rates that there shall be a neutral zone at a slightly varying level between them where the current of gas in the interstices between the lumps of coal or coke divides, that is to say, all above that zone moves upward to the rich gas exit *e*, and all below that zone moves downward to the poor gas exit C.

Having thus described our invention, we would have it understood that we do not confine ourselves to the exact details as shown and described, but what we claim as our invention is—

1st. In the manufacture of gas, the method of keeping separate the different grades of gas generated in the same retort or stack, which consists in maintaining between the points of withdrawal of the different grades a neutral zone, substantially as described.

2nd. The within-described method of manufacturing gases of two or more grades, by causing the gas-producing material to traverse through a heated chamber from a feeding aperture to a fire, and conducting away a rich gas through one or more apertures on the way, and also conducting away a poor gas through one or more apertures at a later stage than the other, all substantially as and adapted to serve the purposes herein set forth.

3rd. In the manufacture of gas, first, the manufacture of an illuminating gas; 2nd, the further distillation of the solid material, to produce a poor gas; third, the burning of the solid residuum; fourth, the mingling of the products of combustion with the poor gas, to be subsequently employed for heating purposes, as herein specified.

4th. In the manufacture of gas, the method of insuring the even good quality of illuminating gas, in combination with the manufacture of poor gas generated in the same chamber or stack, which consists in passing the gases and vapours distilled from the fresh portions of the charges through partially distilled and coked portions which have a higher temperature, and withdrawing the gas from the chamber or stack, at a point distant from the outlet for the poor gas, to prevent admixture of the latter therewith, substantially as described.

5th. In the manufacture of gas, the continuous process of producing illuminating gas by the aid of combustible gases generated in the chamber or stack, from the same fuel as the illuminating gas, which consists in feeding into the stack from time to time solid or partly solid material, causing the latter to gradually traverse the chamber or stack; maintaining coke or the residuum of said material in a state of partial combustion at the further or lower end of the stack; withdrawing and burning the combustible gas generated at that stage; heating thereby the chamber or stack near the point of feeding in the aforesaid material, and thus distilling the said material; and withdrawing the illuminating gas without permitting it to become mixed with the products of combustion from the further or lower end of the chamber or stack, substantially as described.

6th. In the manufacture of gas, the method of facilitating and increasing the production of illuminating gas by the aid of combustible gases generated in the same chamber or stack, which consists in maintaining a partial combustion at the further end or bottom of the chamber or stack, withdrawing the gases therefrom, heating a current of air by said combustion, mixing said air with the combustible gases and burning them, heating thereby the upper part of the chamber or stack, to distil and produce the illuminating gas, which is withdrawn without permitting a mixture of the combustible gases aforesaid therewith, substantially as described.

7th. In the manufacture of gas, the process of producing in the same chamber or stack, from the same material, and delivering in different directions, gases of different grades, which consists in distilling an illuminating gas from the material when first introduced, withdrawing the said gas, maintaining a partial combustion of the material after withdrawal of the illuminating gas, and withdrawing the poor gas thus produced, without permitting admixture thereof with the illuminating gas, substantially as described.

8th. In the manufacture of gas, the process of producing in the same chamber or stack, from the same material, and delivering in different directions, an illuminating gas of even good quality, and a poor gas adapted to heating purposes, the same consisting in distilling gases and vapours from the material when freshly charged; passing said gases and vapours through

a portion of the charge of higher temperature, from which the rich gases and vapours have been previously distilled; withdrawing the illuminating gas thus produced; causing a partial combustion of the whole or a portion of the coke remaining from former operations; withdrawing the poor gas thus produced, at a point distant from that for the illuminating gas; burning a part of the poor gas to furnish the heat requisite for producing the illuminating gas, and conveying away the remainder of the heating gas, substantially as described.

9th. The continuous process of manufacturing in the same chamber or stack, from the same material, and by means of heat furnished by said material, gases of different grades—one, an illuminating gas, of uniform good quality, and the other a poor gas, adapted to heating purposes, the said process consisting in (1) feeding into the stack of chamber, from time to time, or uniformly, solid or partially solid material; (2) causing the latter to gradually traverse the chamber or stack; (3) maintaining coke or the residuum of said material in a state of partial combustion at the further or lower end of said stack or chamber; (4) withdrawing the gas thus generated; (5) separating and carrying off a portion; (6) heating a current of air by said combustion; (7) mixing said air with the remainder of the gas from the combustion and burning it; (8) heating thereby the upper part of the chamber or stack; (9) distilling by such heat the gases and vapours from the charge when freshly introduced; (10) passing said vapours and gases through partially distilled and coked portions which have a higher temperature, and (11) withdrawing the illuminating gas without admixture with the poor gas, the two gases being kept separate by maintaining between their points of withdrawal a neutral zone, substantially as described.

10th. The combination of the chamber or stack *m*, having a combustion chamber at the bottom, with the pipe *e*, connected with said chamber and provided with an outlet or opening for gas, and adapted also to permit the withdrawal of coke through its outer end, substantially as described.

11th. The combination of the chamber or stack *m*, having a combustion chamber at the bottom, with the independent pipes or sets of pipes or passages *e* and *c* for withdrawing the gases of different grades without admixture, substantially as described.

12th. The combination of the chamber *m*, having a combustion chamber at the bottom, and the flue c^3, surrounding its upper part, with the independent pipes *e* and *c*, the latter communicating with the flue c^3, substantially as described.

13th. The apparatus described, having the upright vertical retort *m*, surrounding flue c^3, fixed grate *a*, provisions *e*, for taking away the illuminating gas, provisions, *c*, c^1, c^2, c^3, for taking away and utilizing the poor or heating gas, and passages, *g* g^1, for supply heated air to mingle with the products of combustion and supply heat to the material at the early stages of its distillation, substantially as herein specified.

14th. An apparatus for the manufacture of gas, composed of the following elements in combination: (1) a chamber or stack, having a combustion chamber at the bottom; (2) a flue surrounding the upper part of said chamber or stack; (3) a hot air flue near the combustion chamber, and communicating with the first-named flue; (4) a pipe for the withdrawal of the gas generated in said combustion chamber communicating therewith, and also with said first-named flue, and (5) a pipe for the withdrawal of gas distilled in the upper part of the chamber or stack, communicating with the interior thereof above the last-named pipe, and adapted also to permit the withdrawal of coke, substantially as described.

15th. The vertical retort described, branched near the base, equipped, one branch with provisions for burning and the other with provisions for extracting the solid matter descending therein, as herein specified.

16th. The upright retort, branched as described, in combination with the inclined grate f^1, in one of the branches, adapted to serve at will either for the extraction of the combustion of the solid matter received in that branch, as herein specified.

17th. In combination with a gas retort adapted for continuous operation, the revolving feed cylinder or drum I, formed with pockets, and revolved within a close-fitting case, J, as and for the purposes herein specified.

18th. In combination with the upright gas retort *m*, operating continuously as specified, and the automatic revolving feeder I J, adapted to supply the gas-producing material, without allowing the passage of air or gas, the friction coupling L K, adapted to allow the feeder to stop with too great resistance, as specified.

19th. In combination with an upright gas retort, arranged for continuous operation, the shaking grate *a*, having inclined teeth, and the rocking device H H^1, adapted for both agitating and carrying away the unconsumed matter, as herein specified.

HENRY YARWOOD ATTRILL.
WILLIAM FARMER.
p. EDWD. WATERS,
their duly authorized Attorney.

This is the specification, marked A, referred to in the annexed Letters of Registration granted to Henry Yarwood Attrill and William Farmer, this seventh day of May, A.D. 1880.

AUGUSTUS LOFTUS.

REPORT.

Improvements in the manufacture of Gas, &c.

REPORT.

Sir, Sydney, 10 April, 1880.

The application of Messrs. H. Attrill and W. Farmer, for Letters of Registration for "Improvements in the manufacture of Gas for heating and illuminating purposes, and in the means and apparatus connected therewith," having been referred to us, we have examined the specification and drawings accompanying the same, and have now the honor to report that we see no objection to the issue of Letters of Registration as prayed for.

We have, &c.,
J. SMITH.
CHAS. WATT.

The Principal Under Secretary.

[Drawings—three sheets.]

B

[825]

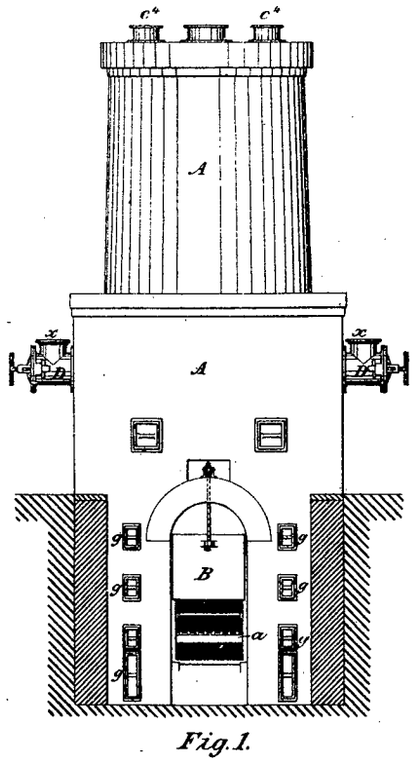

Fig. 1.

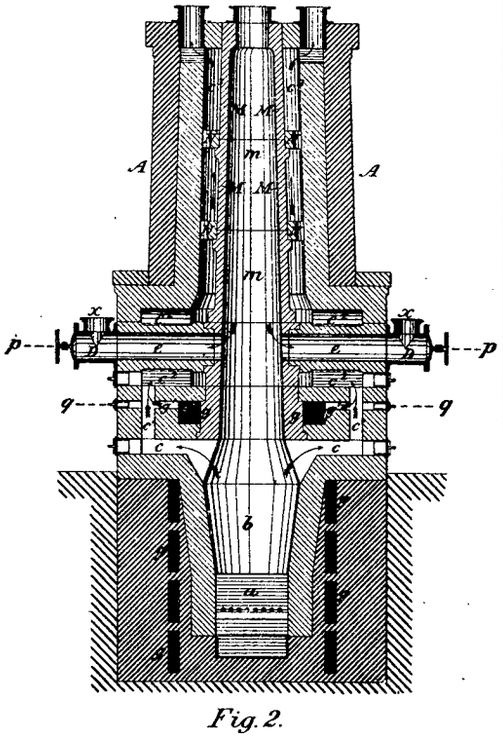

Fig. 2.

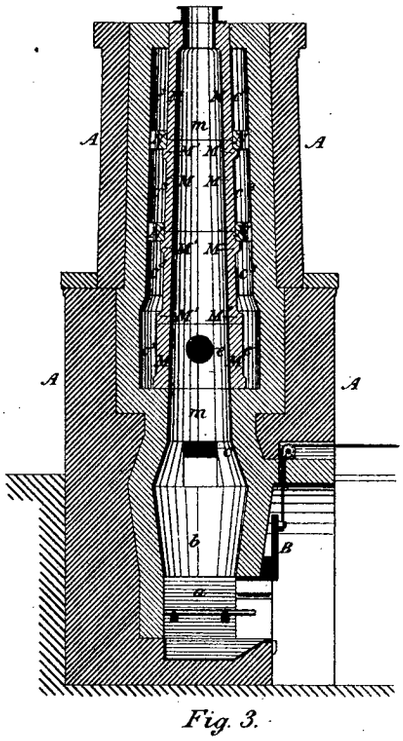

Fig. 3.

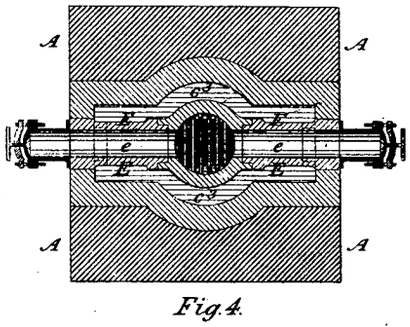

Fig. 4.

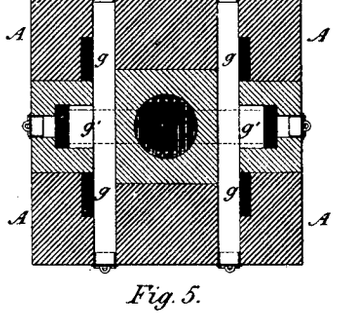

Fig. 5.

This is the Sheet of Drawings marked "B" referred to in the annexed Letters of Registration granted to Henry Yarwood Attill and William Farmer this Seventh day of May — A.D. 1880.

Augustus Softus.

(Sig: 357-)

PHOTO-LITHOGRAPHED AT THE GOVT. PRINTING OFFICE, SYDNEY, NEW SOUTH WALES.

C

[825]

Fig. 6.

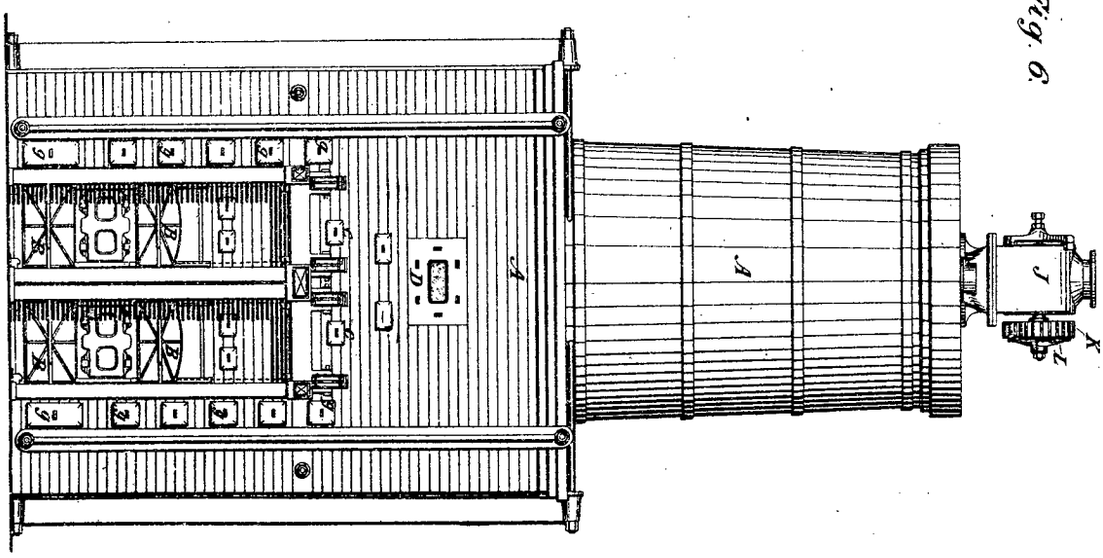

Fig. 7.

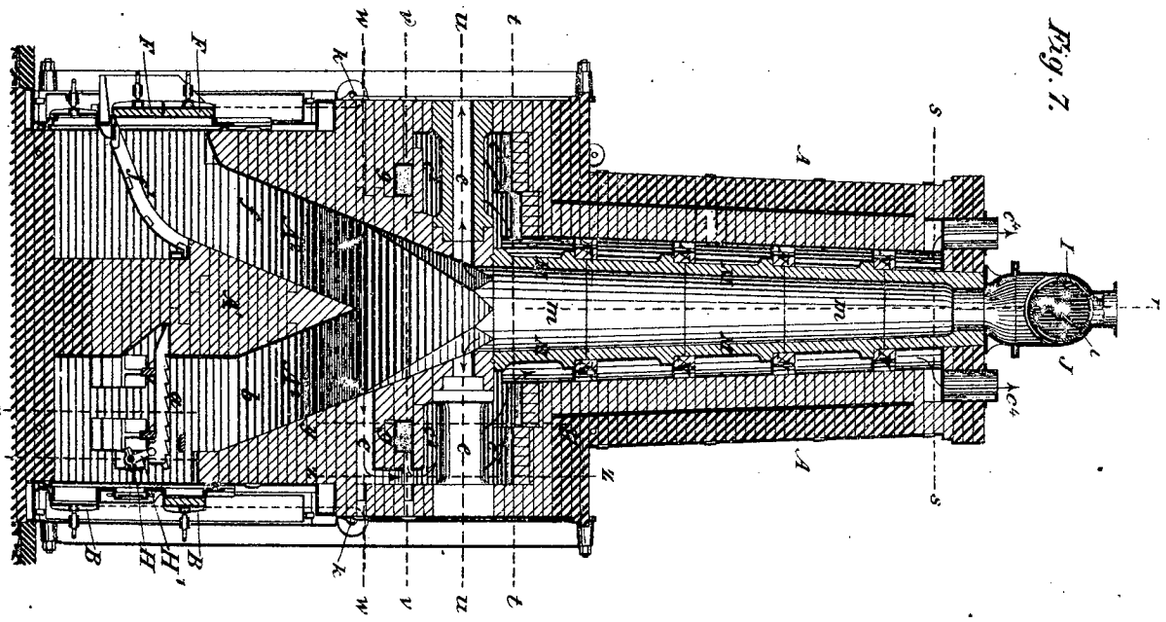

This is the Sheet of Drawings marked "C" referred to in the annexed Letters of Registration granted to Henry Yarwood Atkill and William Farmer this Seventh day of May A.D. 1880

Augustus Loftus

(Sig:357.-)

PHOTO-LITHOGRAPHED AT THE GOVT. PRINTING OFFICE, SYDNEY, NEW SOUTH WALES.

(Sig. 357.)

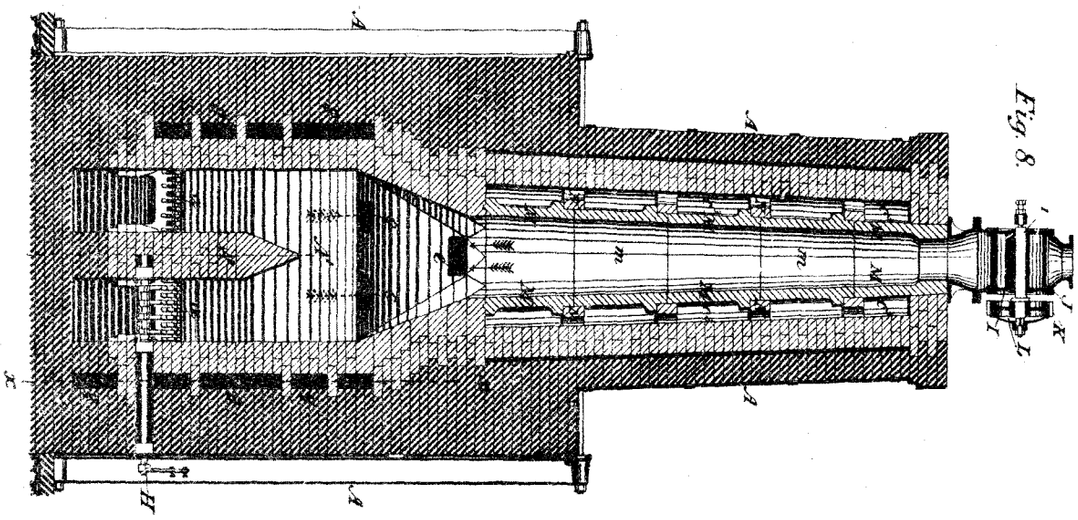

Fig. 8.

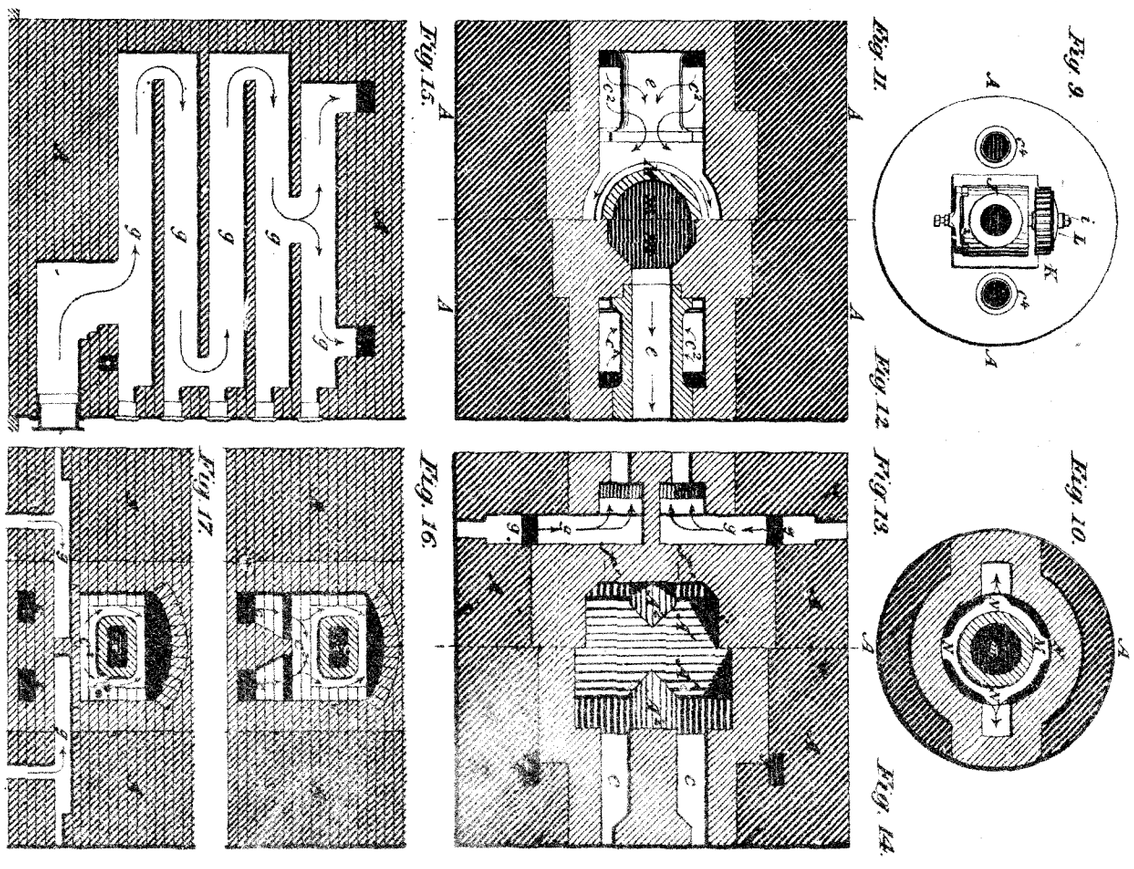

Fig. 9.

Fig. 10.

Fig. 11.

Fig. 12.

Fig. 13.

Fig. 14.

Fig. 15.

Fig. 16.

Fig. 17.

Fig. 18.

D

[825]

This is the Sheet of Drawings marked "D" referred to in the annexed Letters of Registration granted to Henry Yarwood Atkill and William Farmer this Seventh — day of May — — A.D. 1880.

"Augustus Loftus".

PHOTO-LITHOGRAPHED AT THE GOVT. PRINTING OFFICE, SYDNEY, NEW SOUTH WALES

A.D. 1880, 11*th May*. No. 826.

IMPROVED COOKING APPARATUS.

LETTERS OF REGISTRATION to Charles Lewis, for an improved Steam Cooking Apparatus.

[Registered on the 12th day of May, 1880, in pursuance of the Act 16 Vic. No. 24.]

BY His Excellency the Right Honorable Sir Augustus William Frederick Spencer Loftus, (commonly called Lord Augustus Loftus), Knight Grand Cross of the Most Honorable Order of the Bath, a Member of Her Majesty's Most Honorable Privy Council, Governor and Commander-in-Chief of the Colony of New South Wales and its Dependencies.

TO ALL TO WHOM THESE PRESENTS SHALL COME, greeting:

WHEREAS Charles Lewis, of the city of Sydney, in the Colony of New South Wales, engineer, hath by his Petition humbly represented to me that he is the author or designer of a certain invention or improvement in manufactures, that is to say, of an invention of an "Improved Steam Cooking Apparatus," which is more particularly described in the specification and the sheet of drawings which are hereunto annexed; and that he, the said Petitioner, hath deposited with the Honorable the Treasurer of the said Colony of New South Wales the sum of Twenty Pounds sterling, for defraying the expense of granting these Letters of Registration, as required by the Act of Council, sixteenth Victoria, number twenty-four; and hath humbly prayed that I would be pleased to grant Letters of Registration, whereby the exclusive enjoyment and advantage of the said invention or improvement might be secured to him for a period of fourteen years: And I, being willing to give encouragement to all inventions and improvements in the arts or manufactures which may be for the public good, and having received a report favourable to the prayer of the said Petition, from competent persons appointed by me to examine and consider the matters stated therein and to report thereon for my information, am pleased, with the advice of the Executive Council, and in exercise of the power and authority given to me by the said Act of Council, to grant, and do by these Letters of Registration grant unto the said Charles Lewis, his executors, administrators, and assigns, the exclusive enjoyment and advantage of the said invention or improvement, for and during the term of fourteen years from the date hereof; to have, hold, and exercise unto the said Charles Lewis, his executors, administrators, and assigns, the exclusive enjoyment and advantage thereof, for and during and unto the full end and term of fourteen years from the date of these presents next and immediately ensuing, and fully to be complete and ended: Provided always, that if the said Charles Lewis shall not, within three days after the granting of these Letters of Registration, register the same in the proper office in the Supreme Court, at Sydney, in the said Colony of New South Wales, then these Letters of Registration, and all advantages whatsoever hereby granted, shall cease and become void.

In witness whereof, I have hereunto set my sign manual, and have caused the present Letters of Registration to be sealed with the seal of the said Colony of New South Wales, at Government House, Sydney, in New South Wales, this eleventh day of May, in the year of our Lord one thousand eight hundred and eighty.

[L.S.]

AUGUSTUS LOFTUS.

SPECIFICATION

Improved Cooking Apparatus.

SPECIFICATION of CHARLES LEWIS, of the London Iron Works, Phillip-street, Sydney, in the Colony of New South Wales, engineer, of an Improved Steam Cooking Apparatus.

Now know ye that I, the said Charles Lewis, do hereby declare the nature of the said invention, and in what manner the same is to be carried into effect, to be particularly described and ascertained by the following statement, that is to say :—

This invention has been devised for the purpose of providing an economical, convenient, and efficient steam cooking apparatus, the cooking capacity of which shall be entirely under control, and by which the flavour and juices of the articles cooked therein are perfectly retained. It is especially adapted for large institutions, such as hospitals, asylums, schools, clubs, restaurants, gaols, ships, and such like.

My apparatus consists essentially of a number of cooking chambers, built one over the other, of sheet wrought iron, each chamber empty and having its own door and its own steam-pipe supply, which latter, however, is only a branch of the main pipe that supplies all the cooking chambers with steam when required. Figure 1 of the accompanying drawings shows a front elevation of a cooking apparatus constructed according to my invention, and figure 2 side view thereof partly in section. The cooking chambers are marked A, and their doors B. These doors fold downwards on hinges D, and form a shelf, C, supported by small iron brackets, F, riveted on so that when the contents are cooked or examined they may be drawn out and rest on this shelf. Each door has two common rim lift-up latches, E, one at each side, and each chamber has its own steam supply pipe, G, connected to the main steam-pipe H, leading from a boiler placed at any convenient distance away. The valves J are worked by hand-wheels, K. At the back of each compartment is a small vent-hole for the escape of the condensed steam. The apparatus thus described stands in a large iron dish, M, surrounding the bottom of said chambers, and intended to collect and convey away the condensed steam by the pipe N.

It will at once be seen that the number and size of the compartments A, as well as the materials of which they and the several parts of my apparatus are made or manufactured, can be altered or varied without departing from the nature of my invention ; but what I claim is the combination and arrangement of parts forming my improved steam cooking apparatus, in which each compartment has its own door and its own steam-pipe, which when in use surrounds the articles contained therein in a separate steam bath, for the purpose of cooking, substantially as hereinbefore described, explained, and figured.

Dated in Sydney, this 14th day of April, 1880.

CHARLES LEWIS.

This is the amended specification referred to in the annexed Letters of Registration granted to Charles Lewis, this eleventh day of May, A.D. 1880.

AUGUSTUS LOFTUS.

REPORTS.

Sir, Sydney, 7 April, 1880.

The application of Mr. Charles Lewis for Letters of Registration for an "Improved Steam Cooking Apparatus" having been referred to us, we have examined the specification and drawings accompanying the same, and have now the honor to report thereon as follows :—

The apparatus consists simply of chambers of sheet iron arranged in a vertical series, with a steam-pipe furnished with branches by which steam can be blown into each chamber. The door of each chamber folds downwards, and is supported horizontally so as to act as a shelf. The applicant specially claims "the separation of the several compartments or chambers, by means of separate doors to each, so that one or more can be used independently of the others, &c." As this claim would cover the arrangements familiar in many cooking stoves, it cannot be allowed, and in other respects we see no sufficient novelty in the apparatus described and figured to warrant protection by Letters of Registration.

We have, &c.,
J. SMITH.
JAMES BARNET.

The Principal Under Secretary.

Sir, Sydney, 17 April, 1880.

In the matter of the application of Mr. C. Lewis for Letters of Registration for an "Improved Steam Cooking Apparatus," on which we reported unfavourably under date 7th April, and which has been referred back to us with an amended specification, we have now the honor to report that, with these amendments, embracing a more explicit and restricted claim, we see no objection to the issue of Letters of Registration as prayed for.

We have, &c.,
J. SMITH.
JAMES BARNET.

The Principal Under Secretary.

[Drawings—one sheet.]

IMPROVED
PATENT STEAM COOKING APPARATUS &c.

Scale of Feet

0 1 2 3

1.

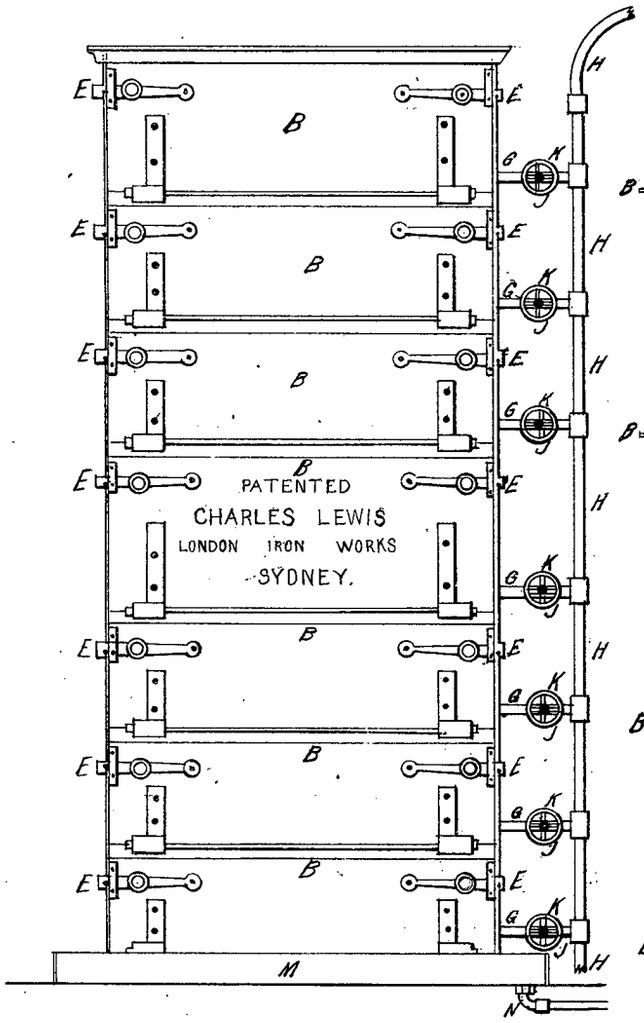

FRONT ELEVATION.

2.

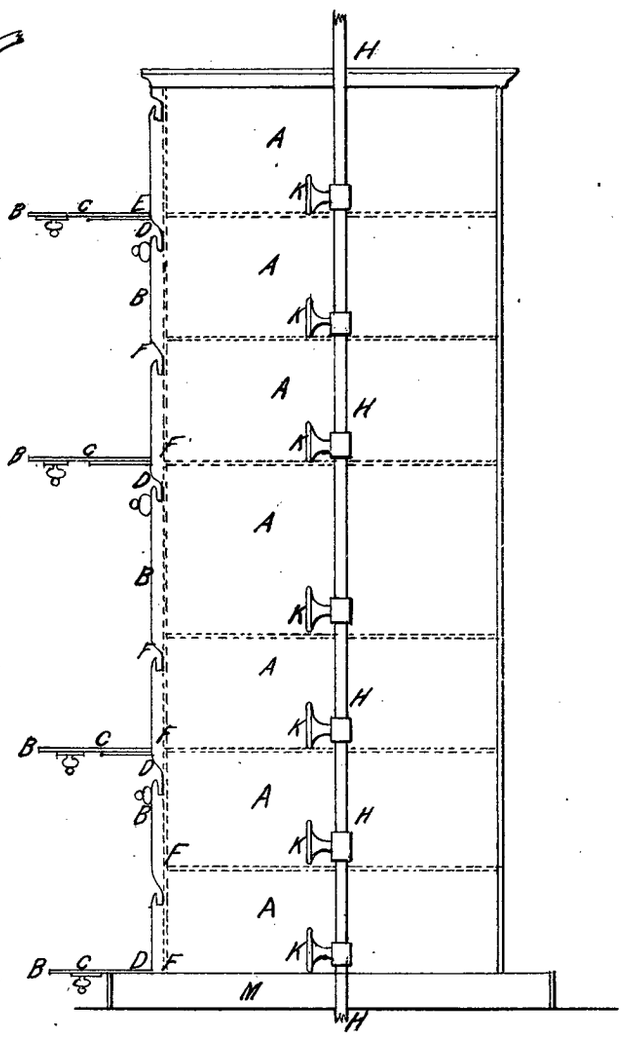

SIDE VIEW & PARTIAL SECTION

This is the Sheet of Drawings referred to in the annexed Letters of Registration granted to Charles Lewis, this eleventh day of May, A.D., 1880.

Augustus Loftus.

A.D. 1880, 11*th May*. No. 827.

IMPROVEMENT IN MACHINES FOR DRESSING GRAIN.

LETTERS OF REGISTRATION to Robert Charles Ransome, for Improvements in Machines for dressing Grain.

[Registered on the 12th day of May, 1880, in pursuance of the Act 16 Vic. No. 24.]

BY His Excellency the Right Honorable Sir Augustus William Frederick Spencer Loftus (commonly called Lord Augustus Loftus), Knight Grand Cross of the Most Honorable Order of the Bath, a Member of Her Majesty's Most Honorable Privy Council, Governor and Commander-in-Chief of the Colony of New South Wales and its Dependencies.

TO ALL TO WHOM THESE PRESENTS SHALL COME, greeting:

WHEREAS Robert Charles Ransome, of Ipswich, in England, but temporarily residing at Saint Kilda, in the Colony of Victoria, engineer, hath by his Petition humbly represented to me that he is the author or designer of a certain invention or improvement in manufactures, that is to say, of an invention entitled "Improvements in Machines for dressing Grain," which is more particularly described in the specification and the sheet of drawings which are hereunto annexed; and that he, the said Petitioner, hath deposited with the Honorable the Treasurer of the said Colony of New South Wales the sum of Twenty Pounds sterling, for defraying the expense of granting these Letters of Registration, as required by the Act of Council, sixteenth Victoria, number twenty-four; and hath humbly prayed that I would be pleased to grant Letters of Registration, whereby the exclusive enjoyment and advantage of the said invention or improvement might be secured to him for a period of fourteen years: And I, being willing to give encouragement to all inventions and improvements in the arts or manufactures which may be for the public good, and having received a report favourable to the prayer of the said Petition, from competent persons appointed by me to examine and consider the matters stated therein and to report thereon for my information, am pleased, with the advice of the Executive Council, and in exercise of the power and authority given to me by the said Act of Council, to grant, and do by these Letters of Registration grant unto the said Robert Charles Ransome, his executors, administrators, and assigns, the exclusive enjoyment and advantage of the said invention or improvement, for and during the term of fourteen years from the date hereof; to have, hold, and exercise unto the said Robert Charles Ransome, his executors, administrators, and assigns, the exclusive enjoyment and advantage thereof, for and during and unto the full end and term of fourteen years from the date of these presents next and immediately ensuing, and fully to be complete and ended: Provided always, that if the said Robert Charles Ransome shall not, within three days after the granting of these Letters of Registration, register the same in the proper office in the Supreme Court, at Sydney, in the said Colony of New South Wales, then these Letters of Registration, and all advantages whatsoever hereby granted, shall cease and become void.

In witness whereof, I have hereunto set my sign manual, and have caused the present Letters of Registration to be sealed with the seal of the said Colony of New South Wales, at Government House, Sydney, in New South Wales, this eleventh day of May, in the year of our Lord one thousand eight hundred and eighty.

[L.S.] AUGUSTUS LOFTUS.

Improvements in Machines for dressing Grain.

SPECIFICATION of ROBERT CHARLES RANSOME, of Ipswich, in England, but temporarily residing at St. Kilda, in the Colony of Victoria, engineer, for an invention entitled "Improvements in Machines for dressing Grain."

This invention has been designed for the purpose of efficiently and expeditiously dressing large quantities of grain, and is intended more especially for use as an adjunct to stripping machines. A dressing machine constructed according to this invention will clean and dress all the produce of (say) four or five ordinary strippers. Its construction and use will be clearly understood by the following description, and by reference to the accompanying drawings, in which figure 1 shows plan of the machine; figure 2, longitudinal vertical section on the line *a a* in figure 1; figure 3, cross section on the line *b b*, in figure 2; and figure 4 is side elevation of part of one side of the machine.

The mode of operation is as follows:—The undressed grain is put into the receiving hopper A and lifted by the elevator a^1 into tray B of upper jog-shoe, and passing along the caving riddle b^1, the cavings and chobs are separated from the chaff and grain.

If the grain be all shelled out of the short ears or parts of ears, and it becomes unnecessary to pass these ears with the chobs through the chobber Q, the opening b^2 in the caving riddle b^1 must be closed with the perforated board marked either No. 1 for barley, or No. 2 for wheat (according to the caving riddle that may be in use), and the opening c^1 in the tray C must also be closed with the blank board marked No. 3, which will allow these short threshed ears to pass over the end of caving riddle b^1 and fall on to the tray H with the chaff.

As the cavings are passing along the caving riddle b^1 they are acted upon by the blast from the fan at D, through the curved passage d^1, which can be adjusted with flap D^2 to admit more or less air as required.

The chaff and grain fall from the riddle b^1 on to the tray C, and travel over the sieve c^2, which separates the dust and seeds from the chaff and grain, the dust and seeds falling into the trough under the sieve c^2, and passing into spout S to the sack at the side of machine marked "dust and seeds," the chaff and grain passing on to the dressing sieves E E, where the chaff is blown from the grain by the blast from fan D through main passage at D^3, which blast can be increased or diminished by the adjustable shutters d^4 and d^5 at the sides of the fan case, and its direction altered by the flap d^6 with the chain d^7 also at the side of such fan case. Should there be any grain blown over with the chaff, the shutters d^4 and d^5 should be closed a little, and the chaff-board e^6 raised; if, on the contrary, the blast should be so weak as to allow the chaff to fall into the trough e^5, the shutters at d^4 and d^5 should be opened a little wider, and if necessary the chaff-board e^6 lowered. The grain falls from the sieves E E on to the inclined plate e^7, into the trough e^2, passes to the cup elevator F, and is elevated and directed from the inclined shoot f^1 into the dressing-sieve g^1 where it is again acted upon by the blast from a second fan, I, conveyed by trough i^1 to dressing-shoe G; the chaff and other light substances being removed by the fan of this second blast, are blown over at g and fall on the caving riddle b^1, where they are again exposed to the blast from the fan D.

The grain falls on to the sieve g^2, which separates the remaining portions of seeds and the small broken grain. The seeds are collected in trough g^4, and pass out at spout K into the sack at the side of the machine marked "seeds and broken corn." The grain after travelling over the seed sieve g^2 is collected in the hopper L and elevated with the cup elevator M into the rotary screen N, the screenings falling on to the moving tray n^1 and passing out into box O to sack at the side of the machine marked "screenings," whilst the screened corn is conveyed through the screen N and delivered into box at o^1 to sacks at the side marked "screened corn."

Chobs.—If the short ears in the caving riddle contain corn and it is necessary to take out the perforated boards No. 1 at b^2 and blank board No. 3 at c^1, then the chobs will fall on to the inclined board e^5, and with the other chobs that come over the sieves E E will pass through the opening e^4 into the chobber Q, and from thence be conveyed to centrifugal elevator R into trough e^2 where they join the other grain from the sieves E E, passing on with it as before described.

If the grain is very brittle and it is advisable not to pass the chobs through the chobber Q, then by closing the slide e^4 over chobber and opening the slide e^3 the chobs would pass over the chob sieve at P, and all loose grain would fall through and join the grain from the sieve E E, whilst the chobs would fall off the sieve P into a skep shown at side of machine marked "alternative chob skep 1." The chobs can be again put into the receiving hopper A and go through the machine again.

If the grain is not brittle and it passes through the chobber Q, but on account of the large quantity of chaff that is in the chobs it is advisable not to elevate by the centrifugal elevator R and mix it with the clean corn, and so give the second dresser too much work to do, then the slide r^1 to spout of elevator r^2 must be closed, and the slide r^3 at bottom of elevator opened, and the grain will fall into skep at side of machine marked "alternative chob skep 2." The chobs can be again put into the receiving hopper A and go through the machine again.

If barley is being dressed, then all the corn, by opening the slide e^4 and removing the two lower sieves E E and placing the fine perforated plate marked No. 4 in the diagonal groove e^1, can be made to pass through the awner and chobber Q and elevated by the centrifugal elevator R as before described.

ADJUSTING CHOBBER OR BARLEY AWNER.

This is effected by taking off the cover of chobber case underneath the machine. The chobber or awner is so arranged that either three or six knives, or three plain beaters, which should be sent with each machine, can be attached to the rings as may be required, and the knives or beaters when so attached can be adjusted by slackening out the two set screws with a T box-spanner and sliding them along the shaft, so as to bring them closer to or further from the chobber casing, taking care to tighten up the set screws again. In putting on either knives or beaters, care must be taken that they are arranged equidistant round the rings so as to maintain a balance. For ordinary dressing three knives are generally sufficient, and the rings are then set in the middle of the chobber casing. If, however, the barley is not awned sufficiently the other three knives may be added, and for wheat, or when the chobs are difficult to remove and still appear in the finished sample, the three plain beaters should be used instead of any knives.

This machine must be kept very clean, and all working parts oiled. Having

Improvements in Machines for dressing Grain.

Having thus described the nature of my invention and the manner of performing same, I would have it understood that what I claim as the invention I now seek to patent is, in machines for dressing grain—

First—Combining an under carriage supported on four or more wheels with the operative part of such machines, substantially as herein described and explained.

Second—Combining and arranging the operative parts of such machines in the relative positions and in the manner substantially as herein described and explained.

In witness whereof, I, the said Robert Charles Ransome, have hereto set my hand and seal, this twenty-fourth day of March, one thousand eight hundred and eighty.

ROBERT CHARLES RANSOME.

Witness—
EDWD. WATERS,
Melbourne, Patent Agent.

This is the specification referred to in the annexed Letters of Registration granted to Robert Charles Ransome, this eleventh day of May, A.D. 1880.

AUGUSTUS LOFTUS.

REPORT.

Sir,

Sydney, 12 April, 1880.

We do ourselves the honor to state that we are of opinion that Letters of Registration may be granted in favour of Robert Charles Ransome, for "Improvements in Machines for dressing Grain," in accordance with his Petition, specification, drawings, and claim, transmitted for our report under your blank cover communication of the 1st instant, No. 2,532.

We have, &c.,

GOTHER K. MANN.
ROBERT GEO. MASSIE.

The Principal Under Secretary.

[Drawings—one sheet.]

FIG. 1.

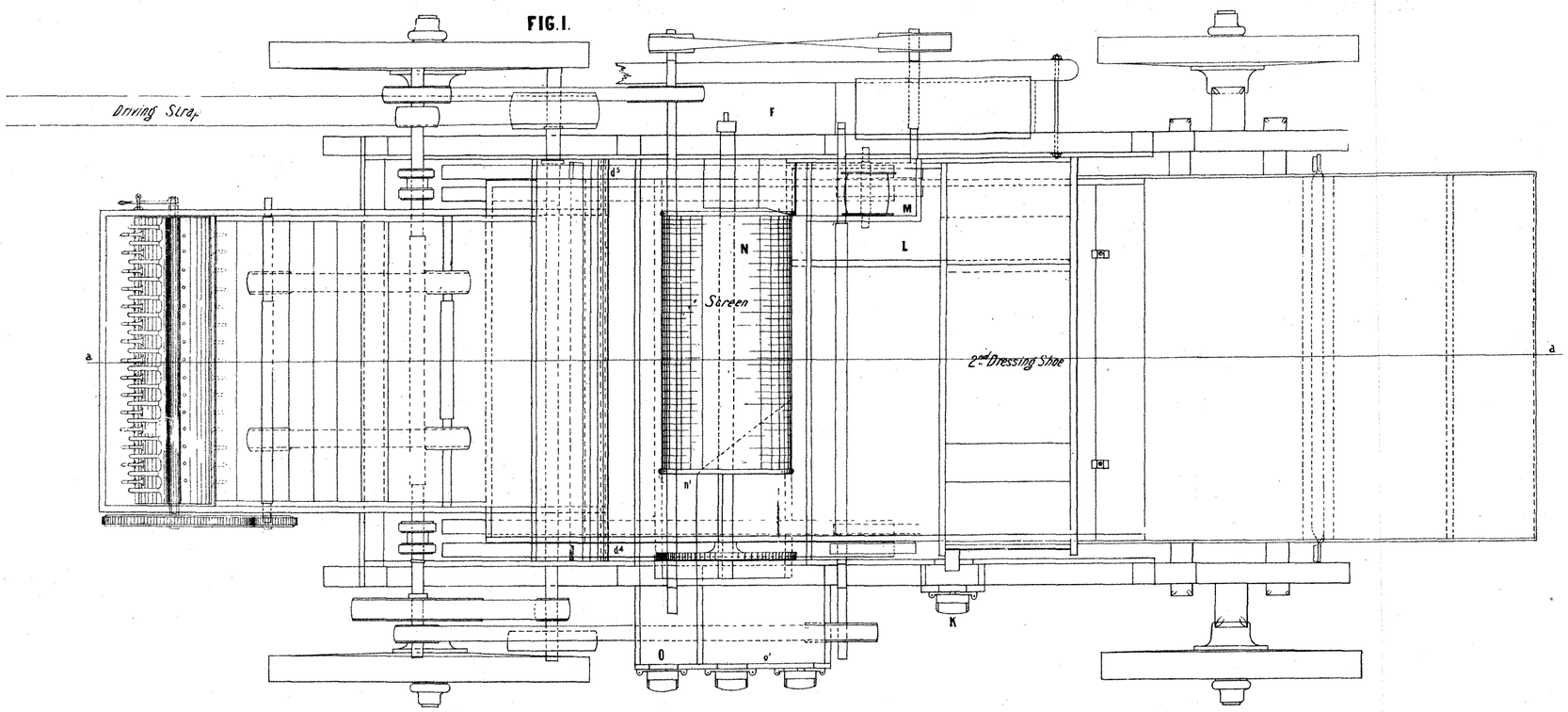

FIG. 4.

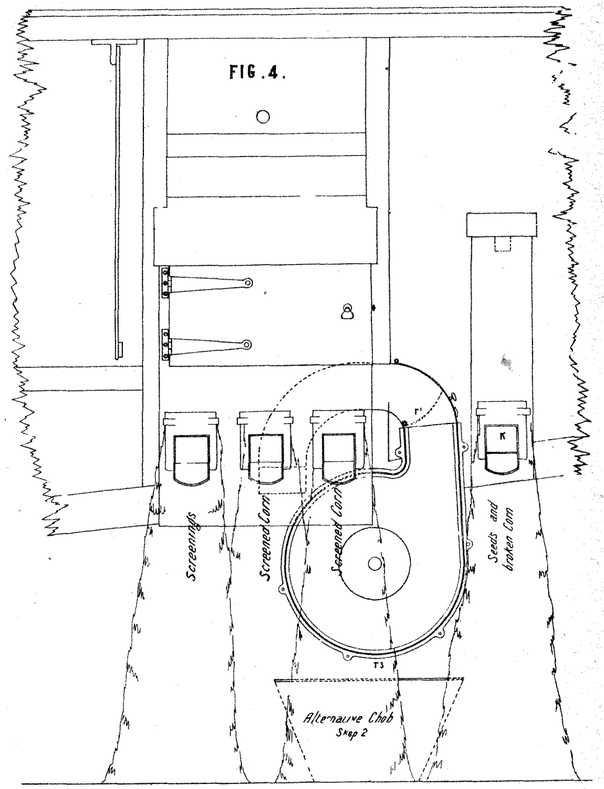

FIG. 2.

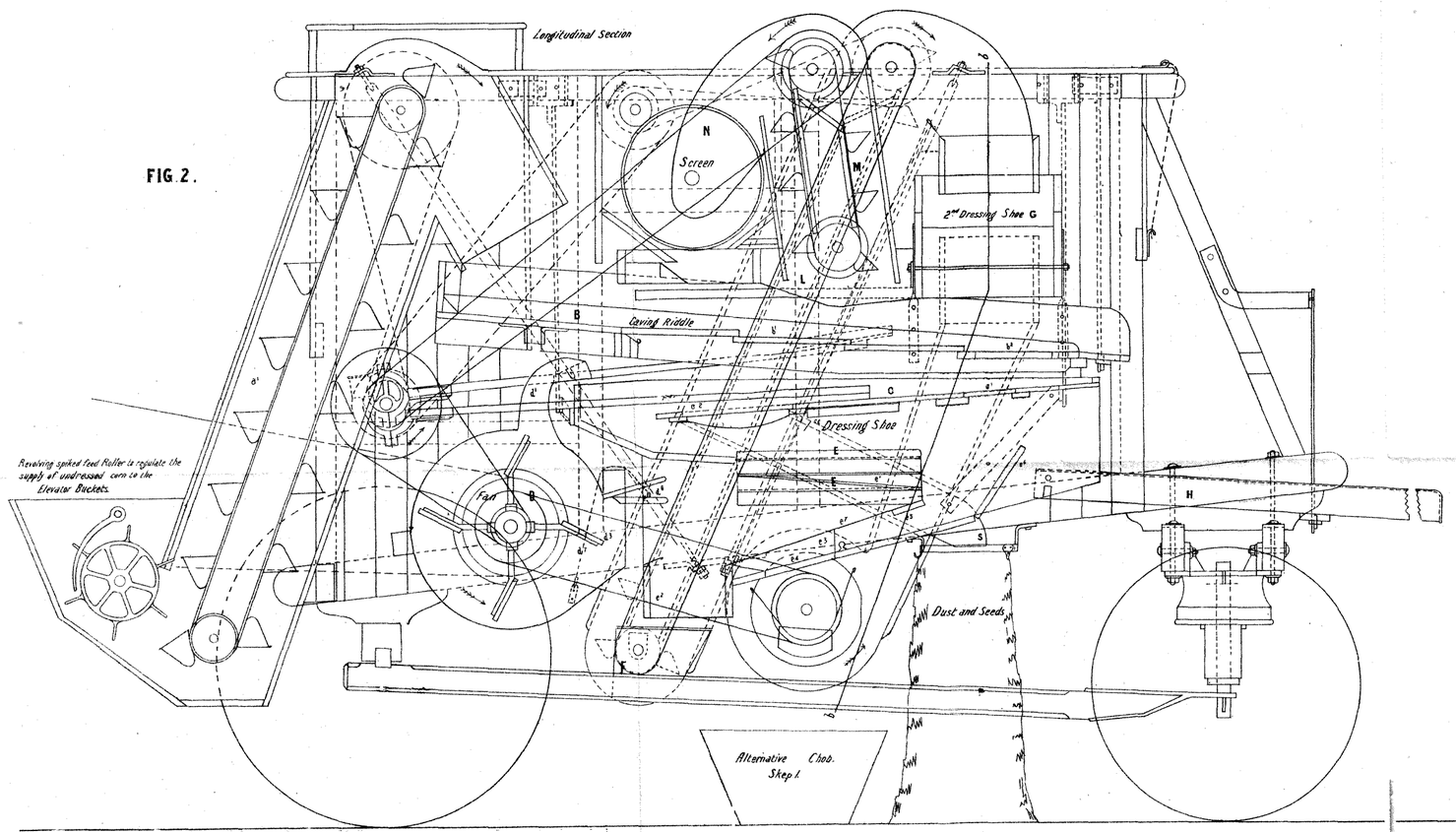

FIG. 3.

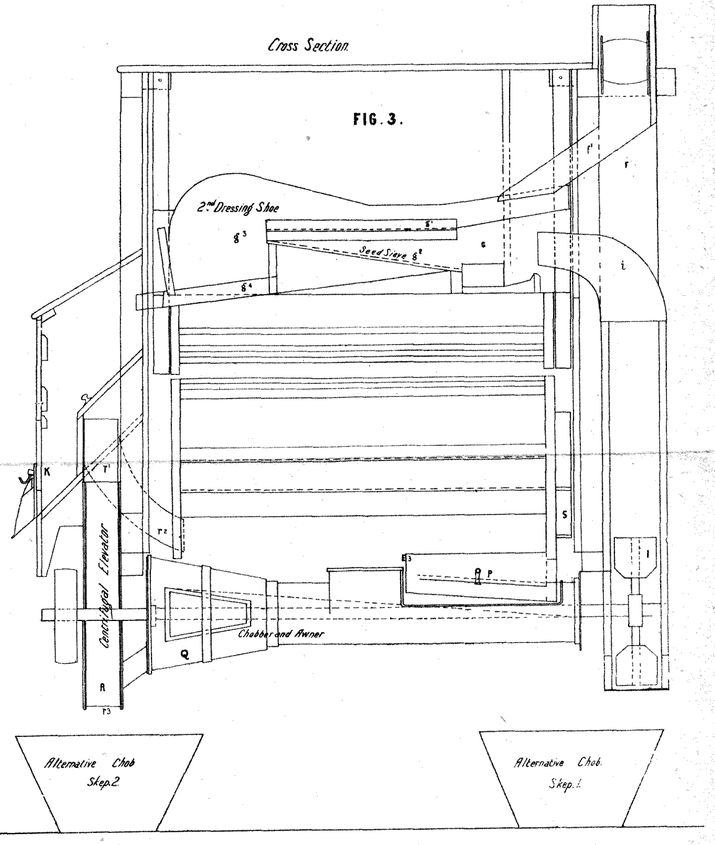

This is the Sheet of Drawings referred to in the annexed Letters of Registration granted to Robert Charles Ransome this Twenth - - - day of May - AD 1880.
(Sig. 357-)
"Augustus Softus"

PHOTO-LITHOGRAPHED AT THE GOVT. PRINTING OFFICE, SYDNEY, NEW SOUTH WALES

A.D. 1880, 11*th May*. No. 828.

IMPROVEMENTS IN ROASTING COFFEE, &c.

LETTERS OF REGISTRATION to David Strang, for Improvements in the Process of and Apparatus for roasting Coffee, Chicory, Cocoa, and other like substances.

[Registered on the 12th day of May, 1880, in pursuance of the Act 16 Vic. No. 24.]

BY His Excellency the Right Honorable Sir Augustus William Frederick Spencer Loftus (commonly called Lord Augustus Loftus), Knight Grand Cross of the Most Honorable Order of the Bath, a Member of Her Majesty's Most Honorable Privy Council, Governor and Commander-in-Chief of the Colony of New South Wales and its Dependencies.

TO ALL TO WHOM THESE PRESENTS SHALL COME, greeting:

WHEREAS David Strang, of Esk-street, Invercargill, in the Colony of New Zealand, hath by his Petition humbly represented to me that he is the assignee of James Mentiplay, of Invercargill aforesaid, who is the author or designer of a certain invention or improvement in manufactures, that is to say, of an invention entitled "Improvements in the Process of and Apparatus for roasting Coffee, Chicory, Cocoa, and other like substances," which is more particularly described in the specification and the sheet of drawings which are hereunto annexed; and that he, the said Petitioner, hath deposited with the Honorable the Treasurer of the said Colony of New South Wales the sum of Twenty Pounds sterling, for defraying the expense of granting these Letters of Registration, as required by the Act of Council, sixteenth Victoria, number twenty-four; and hath humbly prayed that I would be pleased to grant Letters of Registration whereby the exclusive enjoyment and advantage of the said invention or improvement might be secured to him for a period of fourteen years: And I, being willing to give encouragement to all inventions and improvements in the arts or manufactures which may be for the public good, and having received a report favourable to the prayer of the said Petition, from competent persons appointed by me to examine and consider the matters stated therein and to report thereon for my information, am pleased, with the advice of the Executive Council, and in exercise of the power and authority given to me by the said Act of Council, to grant, and do by these Letters of Registration grant unto the said David Strang, his executors, administrators, and assigns, the exclusive enjoyment and advantage of the said invention or improvement, for and during the term of fourteen years from the date hereof; to have, hold, and exercise unto the said David Strang, his executors, administrators, and assigns, the exclusive enjoyment and advantage thereof, for and during and unto the full end and term of fourteen years from the date of these presents next and immediately ensuing, and fully to be complete and ended: Provided always that if the said David Strang shall not, within three days after the granting of these Letters of Registration, register the same in the proper office in the Supreme Court at Sydney, in the said Colony of New South Wales, then these Letters of Registration, and all advantages whatsoever hereby granted, shall cease and become void.

In witness whereof, I have hereunto set my sign manual, and have caused the present Letters of Registration to be sealed with the seal of the said Colony of New South Wales, at Government House, Sydney, in New South Wales, this eleventh day of May, in the year of our Lord one thousand eight hundred and eighty.

[L.S.] AUGUSTUS LOFTUS.

SPECIFICATION

Improvements in roasting Coffee, &c.

SPECIFICATION of DAVID STRANG, of Esk-street, Invercargill, in the Colony of New Zealand, for an invention entitled "Improvements in the Process of and Apparatus for roasting Coffee, Chicory, Cocoa, and other like substances."

THIS invention has been designed for the purpose of roasting coffee, chicory, cocoa, and other like substances, but is more especially applicable to the roasting of coffee, inasmuch as by it the roasting is equally performed over the whole of the berries submitted to its operation, and the natural quality and flavour of the coffee is retained, instead of being injuriously affected (as it is in other processes) by the action of the fumes arising from a charcoal fire.

Now, the improvement in the process of roasting coffee, chicory, cocoa, and other like substances which forms the first part of this invention consists in the substitution of heated air for the hot fumes and gases arising from the combustion of charcoal or other fuel, and by which the coffee, &c., is commonly roasted.

The improvement in apparatus for roasting coffee, chicory, cocoa, and other like substances which forms the second part of this invention consists in an apparatus of novel construction by which the aforesaid improved process can be carried into operation. This apparatus is clearly illustrated in the accompanying drawings, where fig. 1 shows cross section, fig. 2 longitudinal section, fig. 3 horizontal section on line *a a* in fig. 1, fig. 4 horizontal section on line *b b* in fig. 2, whilst figs. 5 and 6 show elevations of the two ends of the apparatus or roaster.

A is a wire cloth cylinder closed at each end and having a slide door on the periphery sufficiently large to admit of its being rapidly filled and discharged. The ends of this cylinder are keyed on to a wrought iron spindle, A^1, by which it is made to revolve either by hand or other power. Inside the cylinder are fixed four diagonal agitators, A^2, placed at opposite angles alternately, by which means the material heated is being continually turned over while the cylinder is in motion, thereby ensuring the equal roasting thereof. This cylinder revolves in a frame, B, at four points of which are fixed studs, each bearing a loose roller, B^1, running on rails, B^2, which extend outside the hot air or roasting chamber C, as shown in figs. 2 and 4, so as to enable the cylinder to be easily drawn out of such chamber, either to examine or discharge its contents. On the outer end of the frame B is a door, B^3, which is drawn in with the cylinder and fits that end of the hot-air chamber so as to prevent the ingress of cold air. C^1 is a throttle valve in pipe C, which leads from the roasting-chamber C to the chimney D. This pipe is for the purpose of drawing off the moisture from the coffee, &c., while it is being roasted, and the throttle valve is for the purpose of closing such pipe, and so preventing the loss of heat when the coffee, &c., becomes dry. E is a furnace, E^1, hollow fire-bars, E^2, hollow centre bearer, F F, are vertical wrought iron tubes, riveted in the wrought iron tube plates F^1 and F^2, the former being the bottom of the hot-air or roasting chamber, and the latter being the top of the cold-air chamber G. The air in passing through the tubes F is heated to the required temperature by the action of the flame round the external surface of the tubes. The air in passing to the lower chamber G is partially heated, while passing through the hollow fire-bars E^1, resting on the hollow centre bearer E^2, and having one end open into the lower air chamber. The quantity of air is regulated by a slide placed on the open end of centre bearer.

It will be seen that by this invention any kind of fuel can be used for providing the necessary heat without in any wise affecting the material operated on, as there is no direct communication between the fire and the roasting cylinder.

Having thus described the nature of this invention and the manner of performing same, I would have it understood that what I claim is—

First—The roasting of coffee, chicory, cocoa, and other like substances by hot air instead of the hot fumes and gases arising from the combustion of charcoal or other fuel, substantially as herein described and explained.

Second—The combination and arrangement of parts forming the complete apparatus for carrying out such process, substantially as herein described, and illustrated in the drawings.

This is the specification referred to in the annexed Letters of Registration granted to David Strang, this eleventh day of May, A.D. 1880.

AUGUSTUS LOFTUS.

REPORT.

Sir, Sydney, 17 April, 1880.

The application of Mr. David Strang for Letters of Registration, for "Improvements in the Process of and Apparatus for roasting Coffee, Chicory, Cocoa, and other like substances," having been referred to us, we have examined the specifications and drawings accompanying the same, and have now the honor to report that we see no objection to the issue of Letters of Registration as prayed for.

We have, &c.,

J. SMITH.

The Principal Under Secretary. JAMES BARNET.

[Drawings—one sheet.]

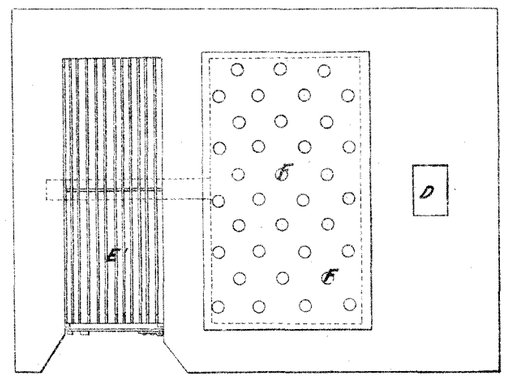

Fig. 3.

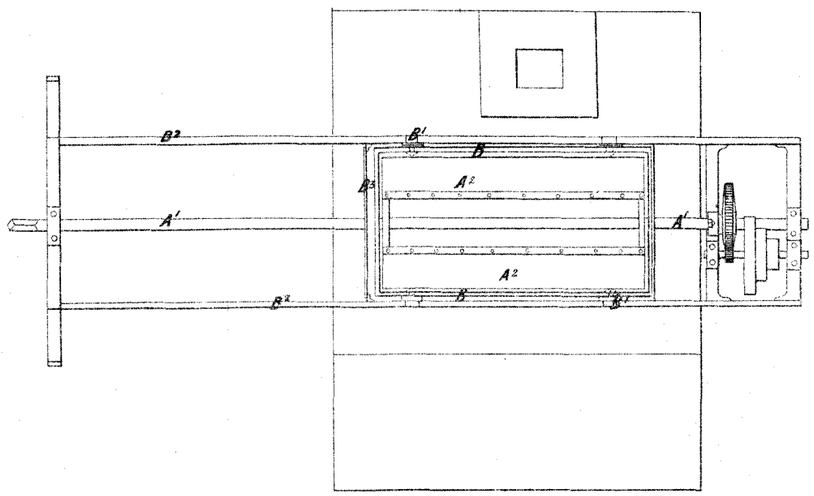

Fig. 4.

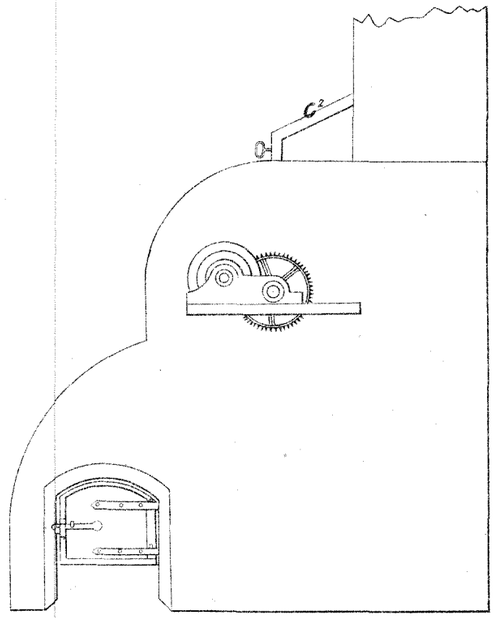

Fig. 5.

PLAN OF INVENTION FOR

Improvement in Roasting COFFEE, &C.

Fig. 1

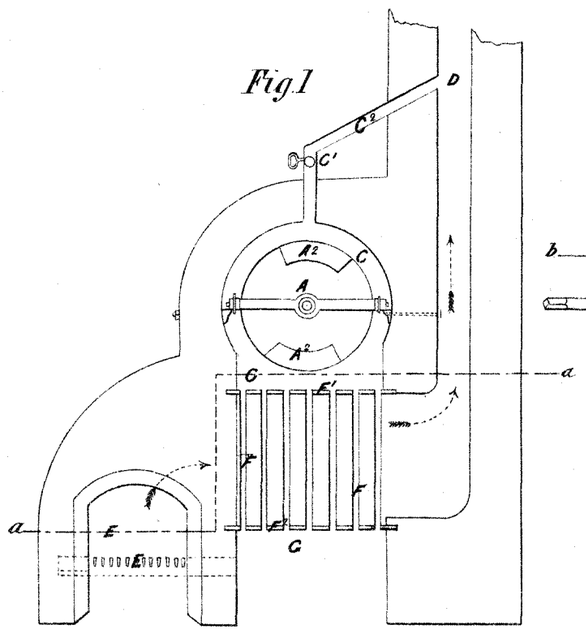

Fig. 2.

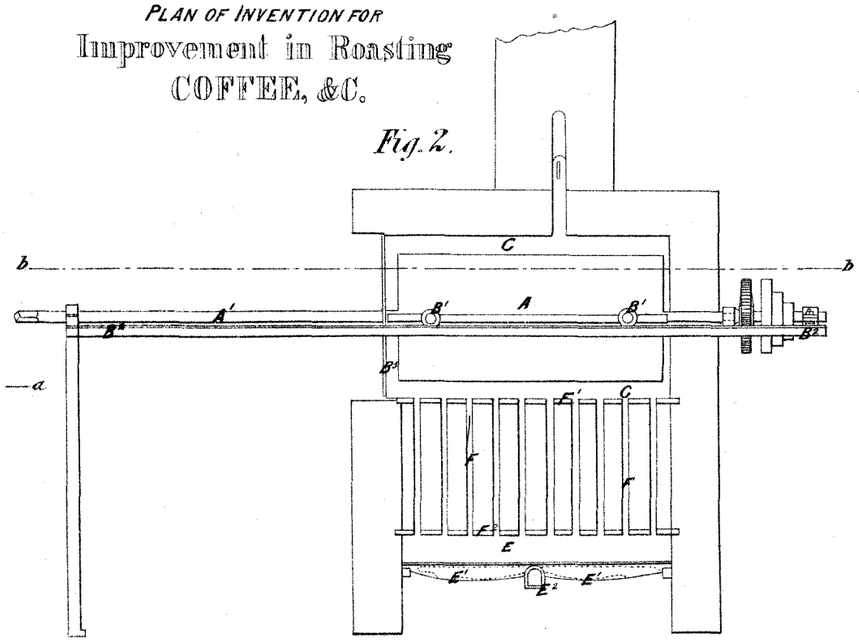

Fig. 6.

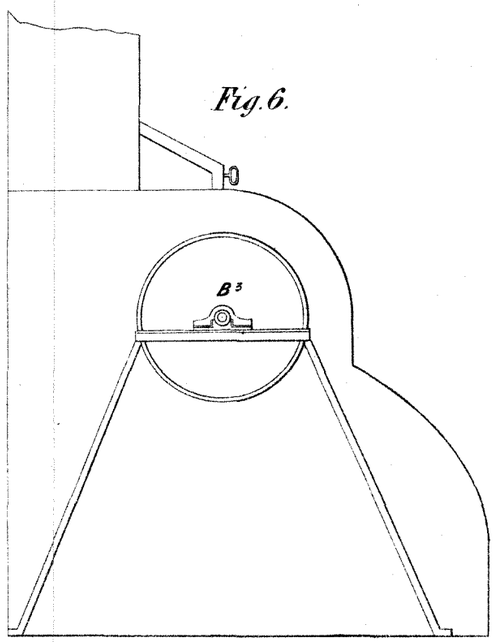

This is the Sheet of Drawings referred to in the annexed Letters of Registration granted to David Strang this eleventh day of May, A.D. 1880.

Augustus Loftus.

PHOTO-LITHOGRAPHED AT THE GOVT. PRINTING OFFICE, SYDNEY, NEW SOUTH WALES.

A.D. 1880, 11*th May*. No. 829.

IMPROVEMENTS IN DISINFECTING AND DEODORIZING APPARATUS FOR WATER-CLOSETS AND OTHER PURPOSES.

LETTERS OF REGISTRATION to Victor Emile Etienne, for Improvements in Disinfecting and Deodorizing Apparatus for Water-closets and other purposes.

[Registered on the 12th day of May, 1880, in pursuance of the Act 16 Vic. No. 24.]

BY HIS EXCELLENCY THE RIGHT HONORABLE SIR AUGUSTUS WILLIAM FREDERICK SPENCER LOFTUS (commonly called LORD AUGUSTUS LOFTUS), Knight Grand Cross of the Most Honorable Order of the Bath, a Member of Her Majesty's Most Honorable Privy Council, Governor and Commander-in-Chief of the Colony of New South Wales and its Dependencies.

TO ALL TO WHOM THESE PRESENTS SHALL COME, greeting:

WHEREAS VICTOR EMILE ETIENNE, of Haven Lodge, Ealing, in the county of Middlesex, England, gentleman, hath by his Petition humbly represented to me that he is author or designer of a certain invention or improvement in manufactures, that is to say, of an invention for "Improvements in Disinfecting and Deodorizing Apparatus for Water-closets and other purposes," which is more particularly described in the specification and the drawing which are hereunto annexed; and that he, the said Petitioner, hath deposited with the Honorable the Treasurer of the said Colony of New South Wales the sum of Twenty Pounds sterling, for defraying the expense of granting these Letters of Registration, as required by the Act of Council, sixteenth Victoria, number twenty-four; and hath humbly prayed that I would be pleased to grant Letters of Registration, whereby the exclusive enjoyment and advantage of the said invention or improvement might be secured to him for a period of fourteen years: And I, being willing to give encouragement to all inventions and improvements in the arts or manufactures which may be for the public good, and having received a report favourable to the prayer of the said Petition, from competent persons appointed by me to examine and consider the matters stated therein and to report thereon for my information, am pleased, with the advice of the Executive Council, and in exercise of the power and authority given to me by the said Act of Council, to grant, and do by these Letters of Registration grant unto the said Victor Emile Etienne, his executors, administrators, and assigns, the exclusive enjoyment and advantage of the said invention or improvement, for and during the term of fourteen years from the date hereof; to have, hold, and exercise unto the said Victor Emile Etienne, his executors, administrators, and assigns, the exclusive enjoyment and advantage thereof, for and during and unto the full end and term of fourteen years from the date of these presents next and immediately ensuing, and fully to be complete and ended: Provided always, that if the said Victor Emile Etienne shall not, within three days after the granting of these Letters of Registration, register the same in the proper office in the Supreme Court, at Sydney, in the said Colony of New South Wales, then these Letters of Registration, and all advantages whatsoever hereby granted, shall cease and become void.

In witness whereof, I have hereunto set my sign manual, and have caused the present Letters of Registration to be sealed with the seal of the said Colony of New South Wales, at Government House, Sydney, in New South Wales, this eleventh day of May, in the year of our Lord one thousand eight hundred and eighty.

[L.S.] AUGUSTUS LOFTUS.

SPECIFICATION.

A.D. 1880. No. 829.

Improvements in Disinfecting and Deodorizing Apparatus for Water-closets, &c.

SPECIFICATION.

TO ALL TO WHOM THESE PRESENTS SHALL COME, I, VICTOR EMILE ETIENNE, of Haven Lodge, Ealing, in the county of Middlesex, England, gentleman, send greeting:

WHEREAS I am desirous of obtaining Letters of Registration for securing unto me Her Majesty's special license that I, my executors, administrators, and assigns, or such others as I or they shall or may agree with and no others, shall or lawfully may from time to time, and at all times during the term of fourteen years, to be computed from the day on which this instrument is left at the office of the Colonial Secretary at Sydney, make, use, exercise, and vend, within the Colony of New South Wales, an invention for Improvements in Disinfecting and Deodorizing Apparatus for Water-closets and other purposes; and in order to obtain such Letters of Registration I must, by an instrument in writing under my hand, more particularly describe the said invention and the manner of its performance: Now, therefore, know ye that I, the said VICTOR EMILE ETIENNE, do hereby declare the nature of the invention, and the manner of its performance or use, to be as more particularly described in the following statement and description, reference being had to the drawing hereto annexed.

DESCRIPTION.

The object of my invention is the construction of an apparatus which may be fitted to water-closets, urinals, lavatories, and other places, for disinfecting purposes.

In apparatus as hitherto constructed for this purpose the arrangements have been very unreliable in their action, owing to their complicated nature, levers and rods being generally employed, which more or less interfere with the sure working of the apparatus, and at times occasion great inconvenience by causing an overflow, either through the levers fouling each other, or from any other portion of the apparatus failing in its action and thus preventing the proper working of the parts governing the inlet of the flushing water.

Another objection to these apparatuses, as at present constructed, is the impossibility of fitting them to some closets, owing to the space required for the lever arrangements above referred to.

Now, according to my invention, I dispense with the use of any lever, and construct an apparatus simple and reliable in its action, and of such a shape that it is capable of being fitted in any ordinary water-closet.

The invention consists of a suitably shaped receiver, perfectly concave on one side and convex on the other, the concavity allowing the receiver, when applied to a water-closet, to fit close to or embrace a portion of the site of the container, the object of which is that the apparatus shall occupy the least space possible.

A pump is fitted inside the receiver by means of an adjustable link, the rod of which pump is connected direct with the rod or lever that works the plug for flushing.

A pipe with the necessary valves is led as usual from the pump to deliver the disinfecting fluid into the pan with the flushing water, a movable lid being provided at one portion of the receiver to supply it with the disinfecting fluid as required.

The main advantages of my invention are—simplicity of construction, reliability of action, and applicability to any ordinary water-closets.

VICTOR EMILE ETIENNE,
(By his Agent, HENRY HALLORAN).

1, Bridge-st. Chambers, 15th March, 1880.

This is the specification referred to in the annexed Letters of Registration granted to Victor Emile Etienne, this eleventh day of May, A.D. 1880.

AUGUSTUS LOFTUS.

REPORT.

Sir,

Sydney, 7 April, 1880.

We have the honor to return herewith the papers having reference to the application of Mons. V. Emile Etienne for Letters of Registration for "Improvements in Disinfecting and Deodorizing Apparatus for Water-closets and other purposes," and have to state that we see no objection to the issue of Letters of Registration to the applicant.

We have, &c.,
CHAS. WATT.
JAMES BARNET.

The Principal Under Secretary.

Drawing—one sheet.

No. 830.

[Assignment of No. 455. See page 9 of Return of 27 March, 1878.]

The Patent Deodorising Water Closet Co.

The Apparatus can be fitted to any Closet in Five Minutes.

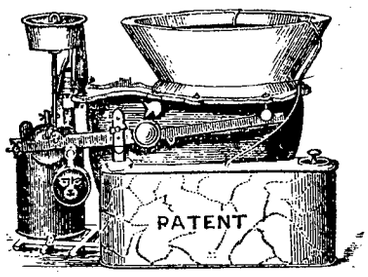

HEALTH, SIMPLICITY AND COMFORT.

By this simple Invention all disagreeable smells from Closets are effectually prevented.

Respectable Plumbers are appointed as agents in the City and suburbs, also in the chief provincial towns, who will supply and fix the apparatus.

The Patent will be fitted and filled with twelve months' supply of Deodorising Fluid for 30/.

A future supply of the Deodorising Fluid can be obtained from the local agents at 5/ per gallon.

The Invention entirely supersedes Air Shafts for Closets.

Terms.

ONE CLOSET, filled complete, including a Twelve Months' supply of Fluid	30/-
Four or more in one Building . . each	27/6

Should the pan get discoloured, a little Spirit of Salts will immediately remove it.

The Patent can be seen working at the Company's West End Office, 27, Harrow Road, Paddington.

Apply or address to the Company, East India Avenue, Leadenhall Street, or 27, Harrow Road, Paddington.

This is the Drawing referred to in the annexed Letters of Registration granted to Victor Emile Etienne, this eleventh day of May, A.D. 1880.

Augustus Loftus

PHOTO-LITHOGRAPHED AT THE GOVT. PRINTING OFFICE, SYDNEY, NEW SOUTH WALES.

A.D. 1880, 25*th May*. No. 831.

IMPROVEMENTS IN APPARATUS FOR WASHING OR SCOURING WOOL.

LETTERS OF REGISTRATION to John Warren and John Hogarth, for Improvements in Apparatus for Washing or Scouring Wool.

[Registered on the 26th day of May, 1880, in pursuance of the Act 16 Vic. No. 24.]

BY His Excellency the Right Honorable Sir Augustus William Frederick Spencer Loftus (commonly called Lord Augustus Loftus), Knight Grand Cross of the Most Honorable Order of the Bath, a Member of Her Majesty's Most Honorable Privy Council, Governor and Commander-in-Chief of the Colony of New South Wales and its Dependencies.

TO ALL TO WHOM THESE PRESENTS SHALL COME, greeting:

WHEREAS John Warren, of Springfield, in the Province of South Australia, stock-owner, and John Hogarth, of Strangways Springs, in the said Province, stock-owner, have by their Petition humbly represented to me that they are the authors or designers of a certain invention or improvement in manufactures, that is to say, of an invention entitled "Improvements in Apparatus for Washing or Scouring Wool," which is more particularly described in the amended specification and the sheet of drawings which are hereunto annexed; and that they, the said Petitioners, have deposited with the Honorable the Treasurer of the said Colony of New South Wales the sum of Twenty Pounds sterling, for defraying the expense of granting these Letters of Registration, as required by the Act of Council, sixteenth Victoria, number twenty-four; and have humbly prayed that I would be pleased to grant Letters of Registration, whereby the exclusive enjoyment and advantage of the said invention or improvement might be secured to them for a period of fourteen years: And I, being willing to give encouragement to all inventions and improvements in the arts or manufactures which may be for the public good, and having received a report favourable to the prayer of the said Petition, from competent persons appointed by me to examine and consider the matters stated therein and to report thereon for my information, am pleased, with the advice of the Executive Council, and in exercise of the power and authority given to me by the said Act of Council, to grant, and do by these Letters of Registration grant unto the said John Warren and John Hogarth, their executors, administrators, and assigns, the exclusive enjoyment and advantage of the said invention or improvement, for and during the term of fourteen years from the date hereof; to have, hold, and exercise unto the said John Warren and John Hogarth, their executors, administrators, and assigns, the exclusive enjoyment and advantage thereof, for and during and unto the full end and term of fourteen years from the date of these presents next and immediately ensuing, and fully to be complete and ended: Provided always, that if the said John Warren and John Hogarth shall not, within three days after the granting of these Letters of Registration, register the same in the proper office in the Supreme Court, at Sydney, in the said Colony of New South Wales, then these Letters of Registration, and all advantages whatsoever hereby granted, shall cease and become void.

In witness whereof, I have hereunto set my sign manual, and have caused the present Letters of Registration to be sealed with the seal of the said Colony of New South Wales, at Government House, Sydney, in New South Wales, this twenty-fifth day of May, in the year of our Lord one thousand eight hundred and eighty.

[L.S.] AUGUSTUS LOFTUS.

SPECIFICATION

Improvements in Apparatus for Washing or Scouring Wool.

SPECIFICATION of JOHN WARREN, of Springfield, in the Province of South Australia, stock-owner, and JOHN HOGARTH, of Strangways Springs, in the said Province, stock-owner, for an invention entitled "Improvements in Apparatus for Washing or Scouring Wool."

THIS invention consists of certain improvements in apparatus for washing and scouring wool, the nature of which will be readily understood on reference to the annexed drawings, and by the following description.

For a double-crank machine :—

Trough.—Make a long narrow trough, marked A in plan, about eighty feet long, fourteen (14) inches wide, sixteen (16) inches deep, strongly made and watertight, with a four (4) inch hole, marked B on figure No. 1, in bottom near lower end, fitted with a valve marked C. Cut the notch D, plan No. 1, out of top of lower end two and a-half ($2\frac{1}{2}$) inches deep, four (4) inches wide.

Brakes.—Fix across the trough at bottom for two-thirds ($\frac{2}{3}$) of its length from upper end boards, marked E, figures 2 and 3, from six (6) inches to twelve (12) inches high, with two (2) inch hole near bottom, and place the boards about twelve (12) feet apart called brakes.

Crank-frame.—Fix firmly to trough and rising six (6) inches over each side, a frame, marked F, figures 1 and 2, called crank-frame, so arranged that bearings marked G can be fixed to it at from about six (6) to eighty-five feet from lower end of trough.

Cranks.—On crank-frame fix bearings, marked G, opposite to each other, the pairs to be about eight (8) feet apart. Double cranks, marked H, figure 4, are fitted to each pair, made to describe a circle of one (1) foot diameter when revolving, made of one (1) inch round iron except one (1) near centre for attaching power, which is to be two (2) inches, first bearing to be about six (6) feet from lower end of trough.

Combs.—Suspend by bearings, marked I, figure 4, on double cranks, two rods of gas-pipe or other material, marked J on plan ; if pipe, to be one and a quarter ($1\frac{1}{4}$) inch diameter at centre, and one (1) inch at ends, each about seventy (70) feet long, fasten to rods pendent spikes called teeth, marked K on plan, one (1) foot long, three-eighths ($\frac{3}{8}$) inch round, brass or iron, tapered at point, placed eight (8) inches apart on rods. Rods with teeth called combs.

Regulating crank and rod.—Fix a crank, figure 4, on each of double-crank shaft, one outside outside frame, same strength and size of circle with similar rod and mountings as double crank and comb but without teeth ; cranks to be at right angles to double cranks called regulating cranks and rod.

Eccentric shaker.—Fix a pair of bearings, marked M, figure 1, on top of trough side, one (1) foot from lower end; fix to these a shaft, marked N, figure 1, to cross trough, but bent down six (6) inches at sides, and having three (3) or more spikes, marked O, eighteen inches long fixed to it—spikes to project up and towards bottom of trough; attach a lever, marked P, to shaft outside trough, to be worked by a sling, marked Q, from nearest regulating crank, or to an intermediate RR between, called "eccentric shaker."

Delivery belt.—Mount an endless belt, marked S S, figure 2, with or without bars T, to catch the wool on rollers marked U, one placed five (5) inches under water line near upper end of trough, the other fixed where delivery is required, driven by a pulley, marked V, on shaft of double crank nearest, with cross-belt marked W to wheel marked X on shaft of roller at point of delivery.

Variations.—For a three-fold or manifold-crank machine the regulating crank and rod is not required.

The width of trough requires to be increased in proportion to the number of rows of teeth.

The rows of teeth may be increased by making them double on each rod.

Where water supply is scant the machine can be divided into compartments by increasing the height of the brakes, the wool can be conveyed from one to the other by endless belts Y, figure 3, with or without rollers, to squeeze out dirty water ; comb rods to be bent up and some teeth left out to allow room for endless belt to work ; rollers are to be driven by cross-belt B from pulleys on end of crank shaft and shaft of rollers as figure 3.

Mode of working.—Lay the trough so that the upper end shall be two (2) inches higher than lower end, fill it with water, put plugs in holes in brakes, arrange to have a constant stream of water going in at upper end, out at a notch at lower end.

Attach power to strongest crank to cause it to revolve seventy (70) to eighty (80) times per minute, and so as to work teeth of comb up trough against water.

Have a quantity of wool soaked in hot water in a trough close to lower end ; a man stands there with a common three (3) pronged pitch-fork, feeds the machine over spikes of eccentric shaker—it keeps the heavy wool from sinking till it is caught by teeth of comb ; they work it through the water and up trough at the rate of about twenty-five (25) feet per minute. When it reaches upper end it is taken up by endless belt and delivered as required perfectly clean. The pieces of board called brakes prevent under current of water passing down trough, and when high reduce the quantity of water requisite ; if twelve (12) inches high with endless belt to carrry wool over them, and rollers to squeeze dirty water out, the quantity required will be reduced to a minimum.

Cleaning out.—Open the valve at lower end of trough, let the water run out, then scrape sand and dirt to hole, pull plugs out of brake holes to give flow of water to assist cleaning when necessary. Sand and dirt in upper compartments will be very small in quantity, and can be lifted out with narrow shovel or let out same as at lower end.

We would have it understood that we do not limit ourselves to the exact form or proportion of the parts as shown in the drawings, nor to the number of the cranks or combs, as most of the above particulars may be modified without departing from the nature of our invention or seriously affecting the efficiency of the machine, but what we do claim as our invention is—

First—The combination and arrangement of the various mechanical contrivances constituting our apparatus for washing or scouring wool, substantially as herein described, and as illustrated in our drawings.

Second—

Second—The use and application of longitudinal rakes along the whole or very nearly the whole length of the washing and scouring trough.

Third—The brakes E, the curving of the longitudinal rods, and omission of teeth in the rakes when the brakes are heightened by reason of scanty water supply, and making the longitudinal rake-rods hollow, substantially as herein described and explained.

In witness whereof, we, the said John Warren and John Hogarth, have hereto set our hands and seals, this sixteenth day of January, one thousand eight hundred and eighty.

JOHN WARREN.

Witness to signature of John Warren—
E. B. COLTON, Articled Clerk, Adelaide.

JOHN HOGARTH.

Witness to signature of John Hogarth—
J. C. OASTLER, Strangways Springs, Overseer.

This is the specification referred to in the annexed Letters of Registration granted to John Warren and John Hogarth, this twenty-fifth day of May, A.D. 1880.

AUGUSTUS LOFTUS.

REPORTS.

Sir, Sydney, 13 February, 1880.

Adverting to your blank cover communication of the 27th ultimo, No. 653, transmitting for our report Mr. John Warren's Petition for the Registration of "Improvements in the process of and apparatus for Washing or Scouring Wool," we do ourselves the honor to state that we are of opinion that Mr. Warren's first claim is inadmissible in its present form, but that we shall be prepared to reconsider it, if amended so as to apply *only* to his particular machinery.

We have, &c.,
GOTHER K. MANN.
CHAS. WATT.

The Principal Under Secretary.

Sir, Sydney, 24 March, 1880.

We do ourselves the honor to report, in reply to your blank cover communication of the 11th instant, No. 1,805, that we consider Mr. John Warren's first claim too wide, and we draw attention to the concluding portion of our former report of the 13th February last.

We have, &c.,
GOTHER K. MANN.
CHAS. WATT.

The Principal Under Secretary.

Sir, Sydney, 22 April, 1880.

We do ourselves the honor to return the documents transmitted under your blank cover communication of the 4th instant, No. 2,904, and to report that, as Messrs. John Warren and John Hogarth have amended their specification and claim in accordance with the requirements of the concluding paragraph of our former report of the 13th February last, we are now of opinion that Letters of Registration may issue in their favour for "Improvements in Apparatus for Washing and Scouring Wool."

We have, &c.,
GOTHER K. MANN.
CHAS. WATT.

The Principal Under Secretary.

[Drawings—one sheet.]

THE SOUTH AUSTRALIAN WOOL SCOURER

Nº 1

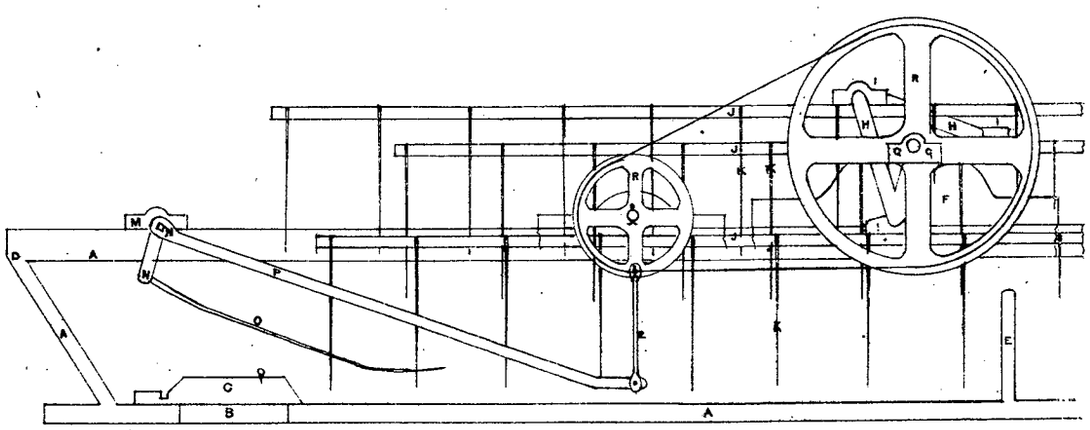

Nº 2

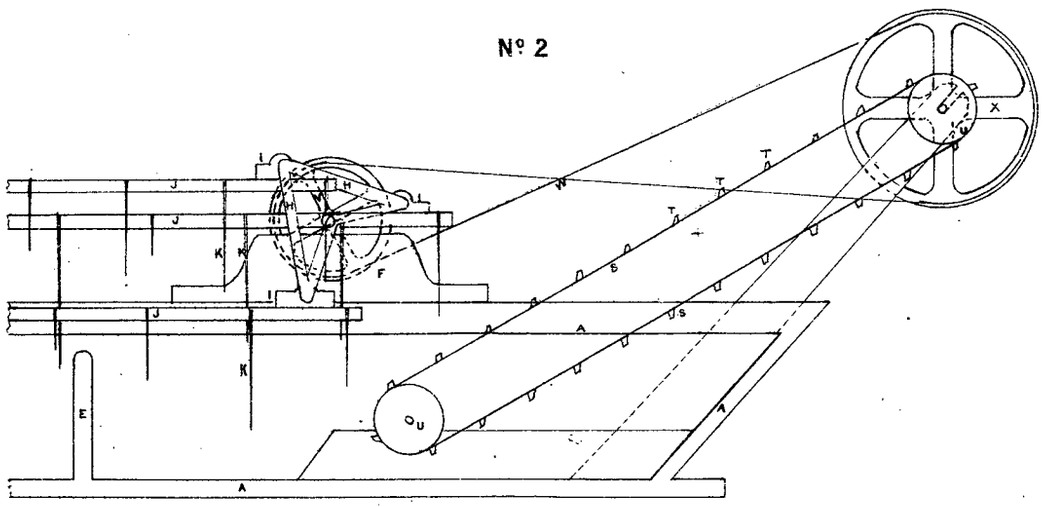

Nº 3

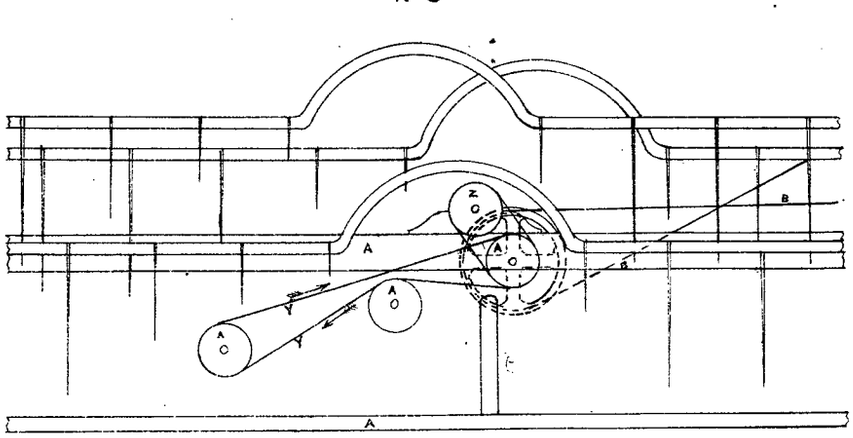

Nº 4

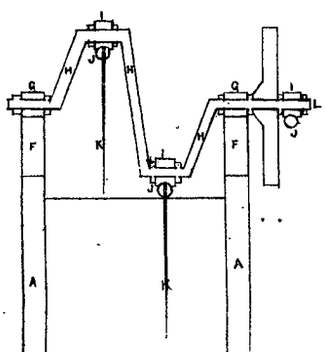

Nº 5

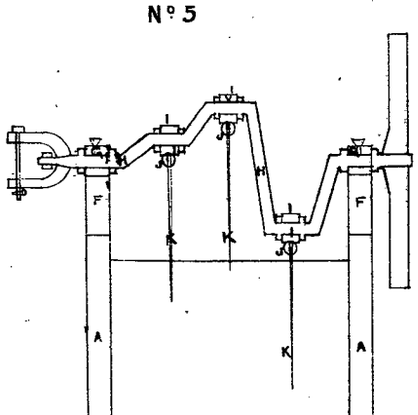

This is the Sheet of Drawings referred to in the annexed Letters of Registration granted to John Warner and John Hogarth this twenty fifth day of May — AD 1880.

(Sig: 357.)

"Augustus Loftus"

PHOTO-LITHOGRAPHED AT THE GOVT. PRINTING OFFICE, SYDNEY, NEW SOUTH WALES.

A.D. 1880, 25*th May*. No. 832.

IMPROVEMENTS IN RAILWAY BRAKES.

LETTERS OF REGISTRATION to Thomas Welton Stanford and Samuel Milligan, for Improvements in Railway Brakes.

[Registered on the 26th day of May, 1880, in pursuance of the Act 16 Vic. No. 24.]

BY His Excellency the Right Honorable Sir Augustus William Frederick Spencer Loftus (commonly called Lord Augustus Loftus), Knight Grand Cross of the Most Honorable Order of the Bath, a Member of Her Majesty's Most Honorable Privy Council, Governor and Commander-in-Chief of the Colony of New South Wales and its Dependencies.

TO ALL TO WHOM THESE PRESENTS SHALL COME, greeting:

WHEREAS Thomas Welton Stanford, importer, and Samuel Milligan, engineer, both of Melbourne, in the Colony of Victoria, have by their Petition humbly represented to me that they are the assignees of Samuel Milligan and Olaf Spencer Wheeler, of Melbourne aforesaid, who are the authors or designers of a certain invention or improvement in manufactures, that is to say, of an invention entitled "Improvements in Railway Brakes," which is more particularly described in the specification and the sheet of drawings which are hereunto annexed; and that they, the said Petitioners, have deposited with the Honorable the Treasurer of the said Colony of New South Wales the sum of Twenty Pounds sterling, for defraying the expense of granting these Letters of Registration, as required by the Act of Council, sixteenth Victoria, number twenty-four; and have humbly prayed that I would be pleased to grant Letters of Registration, whereby the exclusive enjoyment and advantage of the said invention or improvement might be secured to them for a period of fourteen years: And I, being willing to give encouragement to all inventions and improvements in the arts or manufactures which may be for the public good, and having received a report favourable to the prayer of the said Petition, from competent persons appointed by me to examine and consider the matters stated therein and to report thereon for my information, am pleased, with the advice of the Executive Council, and in exercise of the power and authority given to me by the said Act of Council, to grant, and do by these Letters of Registration grant unto the said Thomas Welton Stanford and Samuel Milligan, their executors, administrators, and assigns, the exclusive enjoyment and advantage of the said invention or improvement, for and during the term of fourteen years from the date hereof; to have, hold, and exercise unto the said Thomas Welton Stanford and Samuel Milligan, their executors, administrators, and assigns, the exclusive enjoyment and advantage thereof, for and during and unto the full end and term of fourteen years from the date of these presents next and immediately ensuing, and fully to be complete and ended: Provided always, that if the said Thomas Welton Stanford and Samuel Milligan shall not, within three days after the granting of these Letters of Registration, register the same in the proper office in the Supreme Court, at Sydney, in the said Colony of New South Wales, then these Letters of Registration, and all advantages whatsoever hereby granted, shall cease and become void.

In witness whereof, I have hereunto set my sign manual, and have caused the present Letters of Registration to be sealed with the seal of the said Colony of New South Wales, at Government House, Sydney, in New South Wales, this twenty-fifth day of May, in the year of our Lord one thousand eight hundred and eighty.

[L.S.] AUGUSTUS LOFTUS.

A.D. 1880. No. 832.

Improvements in Railway Brakes.

SPECIFICATION of THOMAS WELTON STANFORD, importer, and SAMUEL MILLIGAN, engineer, both of Melbourne, in the Colony of Victoria, the assignees of an invention entitled "Improvements in Railway Brakes."

THIS invention consists in the application of electricity to the wheels of railway rolling-stock as a brake power. This power we apply in the form of electro-magnets fixed in close proximity to all the wheels of all the vehicles in a train, or to so many of them as may be thought desirable. The electric current can be supplied of any force within the compass of the battery or electrical machine used, so as to give the most perfect and accurate control of the brake power brought into play, thereby ensuring an absolute prevention of the waste now caused by using a greater power than is necessary for accomplishing the required retardation or stoppage. Our invention has also the additional advantage of being exceedingly cheap in construction and working.

These electro-magnets may be of any useful form, but we prefer to make them with their faces of a corresponding shape to that of the periphery of the wheel which they are to grip, and in order to their practical working they must be so set as to retire or fall back from the wheel when the brake is not in use. We prefer that they should be made to so fall back by their own weight.

In order, however, that our invention may be distinctly understood, we will now refer to the drawings hereto attached, where figure 1 shows side elevation of the lower framing of a railway carriage with our invention applied, and figure 2 plan thereof. In each of these figures a part of one of the cases containing our brake blocks is removed in order to show the interior.

A is an electric wire proceeding from a battery or machine, and connected to electro-magnets B contained in a case, B^1, and shod with iron shoes, B^2, made to fit the periphery of the wheel. B^3 is a regulating screw, and B^4 are studs on either side for supporting the case B^1 on arm C, which is supported at one end by pendant lever D, and at the other by a stud on a bracket, E, descending from the framing of the carriage. FF are connections of the ordinary description for joining the wires between each carriage, and GG are curls in the wire so as to allow of any stretching that may be found necessary or convenient.

In figure 2 an extra electric wire, A^1, is shown. This proceeds from the guard van, and is connected by cross wires, A^2, underneath each carriage so as to enable the brakes to be put on either from the engine or from the brake van, and also to provide against the contingency of the breakage of any part of the wire A, or of the refusal of the electric current to pass along it.

The working of our brake is as follows:—Whenever it is required to be applied, a current of electricity of the requisite power is communicated to the electro-magnets B through the wires A, when the shoes B^2 instantly fly on to the wheels, holding them with all their force until the speed of the train is sufficiently lessened, or it is stopped altogether as may be required. When the object of applying the brakes has been accomplished, the electric current is cut off from the wires A; the brake blocks will then instantly release themselves from the wheels and slide backward on the arms C by reason of their own weight.

Of course there is no necessity to withdraw or apply the whole power of our electro-magnetic brake at once, but on the contrary it can be governed with the greatest nicety, giving the most perfect control over it at all times.

Having thus described the nature of our invention and the manner of performing same, we would have it understood that what we claim as our invention is—

First—The application of electricity in the shape of electro-magnets to the wheels of railway rolling stock as a brake power substantially as herein described and explained.

Second—In railway brakes so constructed making the cases which contain the electro-magnetic brake blocks automatically release themselves by their own weight, substantially as herein described and explained.

In witness whereof we, the said Thomas Welton Stanford and Samuel Milligan, have hereto set our hands and seals, this eighth day of March, one thousand eight hundred and eighty.

THOS. W. STANFORD.
SAML. MILLIGAN.

This is the specification referred to in the annexed Letters of Registration granted to Thomas Welton Stanford and Samuel Milligan, this twenty-fifth day of May, A.D. 1880.

AUGUSTUS LOFTUS.

REPORT.

Sir, Sydney, 16 April, 1880.

We have the honor to report that we see no objection to the issue of Letters of Registration to Messrs. Stanford & Milligan for their invention of "Improvements in Railway Brakes," in accordance with their Petition, specification, and claim, transmitted to us under your blank cover communication, No. 80/2,113, of the 12th March.

We have, &c.,
JOHN WHITTON.
WILLIAM BENNETT.

The Principal Under Secretary.

[Drawings—one sheet.]

No. 833.

[Assignment of No. 387. See Letters of Registration for 1873, page 131.]

No. 834.

[Assignment of No. 558. See Letters of Registration for 1876, page 167.]

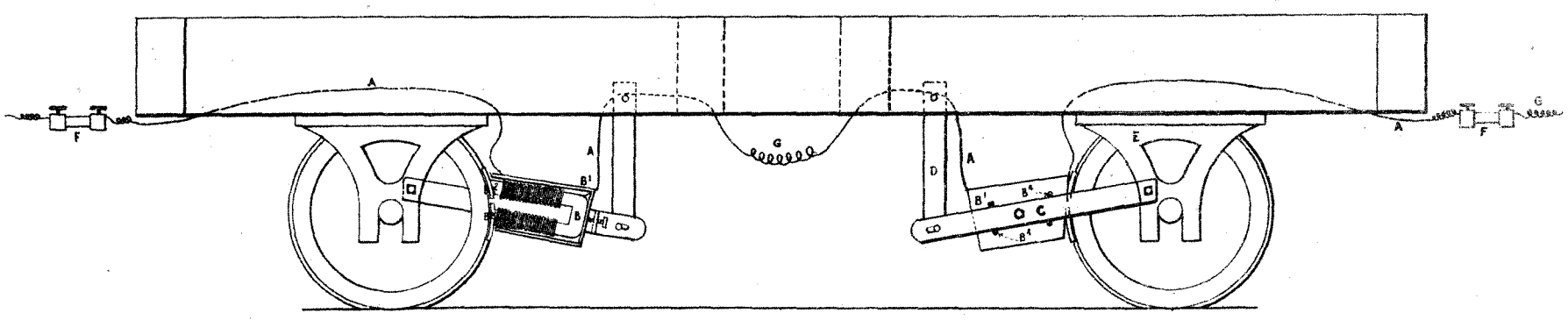

FIG. 1.

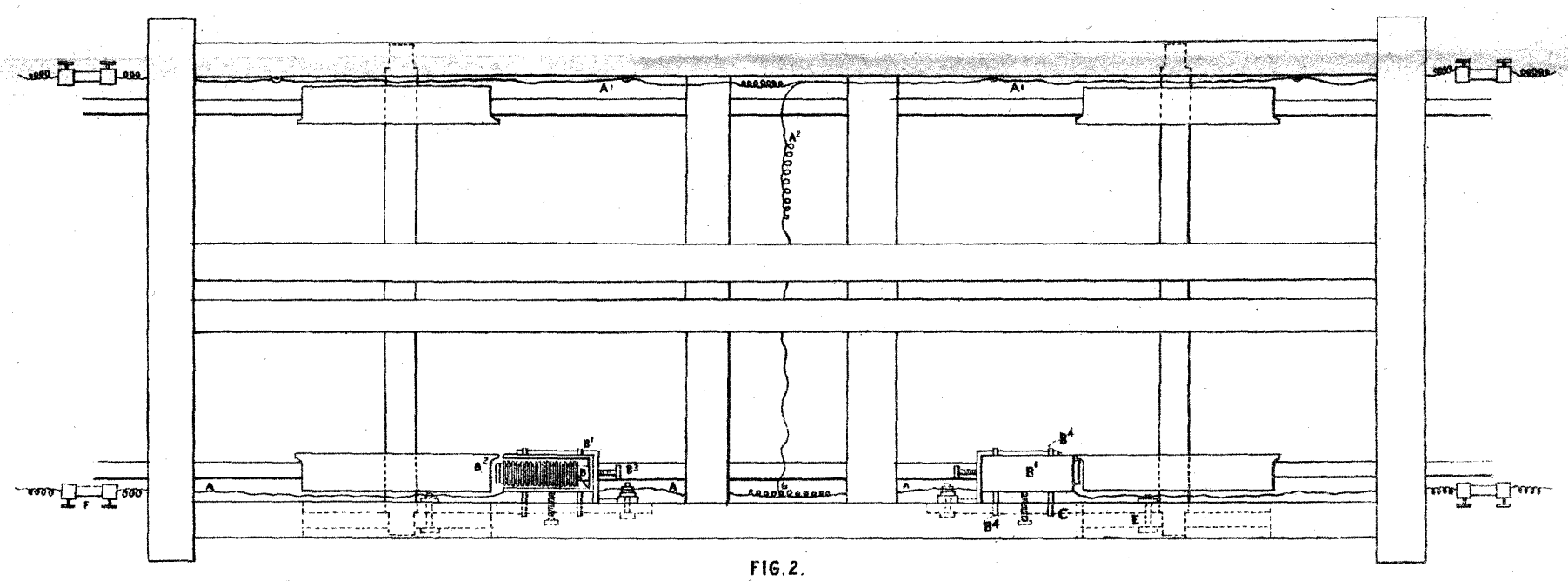

FIG. 2.

This is the Sheet of Drawings referred to in the annexed Letters of Registration granted to Thomas Welton Stanford and Samuel Milligan this twenty fifth day of May A.D. 1880.

(Sig: 357-)

"Augustus Loftus"

PHOTO-LITHOGRAPHED AT THE GOVT. PRINTING OFFICE,
SYDNEY, NEW SOUTH WALES.

A.D. 1880, 28*th May*. No. 835.

IMPROVEMENTS IN MACHINERY FOR POST MARKING AND FOR OBLITERATING STAMPS.

LETTERS OF REGISTRATION to Thomas Leavitt, for Improvements in Machinery for post marking and for obliterating stamps on letters, post cards, and other articles.

[Registered on the 29th day of May, 1880, in pursuance of the Act 16 Vic. No. 24.]

BY HIS EXCELLENCY THE RIGHT HONORABLE SIR AUGUSTUS WILLIAM FREDERICK SPENCER LOFTUS (commonly called LORD AUGUSTUS LOFTUS), Knight Grand Cross of the Most Honorable Order of the Bath, a Member of Her Majesty's Most Honorable Privy Council, Governor and Commander-in-Chief of the Colony of New South Wales and its Dependencies.

TO ALL TO WHOM THESE PRESENTS SHALL COME, greeting:

WHEREAS THOMAS LEAVITT, of Everett, Massachusetts, United States of America, machinist, hath by his Petition humbly represented to me that he is the author or designer of a certain invention or improvement in manufactures, that is to say, of an invention entitled "Improvements in Machinery for post marking and for obliterating stamps on letters, post cards, and other articles," which is more particularly described in the specification, marked A, and the two sheets of drawings, marked B and C respectively, which are hereunto annexed; and that he, the said Petitioner, hath deposited with the Honorable the Treasurer of the said Colony of New South Wales the sum of Twenty Pounds sterling, for defraying the expense of granting these Letters of Registration, as required by the Act of Council, sixteenth Victoria, number twenty-four; and hath humbly prayed that I would be pleased to grant Letters of Registration, whereby the exclusive enjoyment and advantage of the said invention or improvement might be secured to him for a period of fourteen years: And I, being willing to give encouragement to all inventions and improvements in the arts or manufactures which may be for the public good, and having received a report favourable to the prayer of the said Petition, from competent persons appointed by me to examine and consider the matters stated therein and to report thereon for my information, am pleased, with the advice of the Executive Council, and in exercise of the power and authority given to me by the said Act of Council, to grant, and do by these Letters of Registration grant unto the said Thomas Leavitt, his executors, administrators, and assigns, the exclusive enjoyment and advantage of the said invention or improvement, for and during the term of fourteen years from the date hereof; to have, hold, and exercise unto the said Thomas Leavitt, his executors, administrators, and assigns, the exclusive enjoyment and advantage thereof, for and during and unto the full end and term of fourteen years from the date of these presents next and immediately ensuing, and fully to be complete and ended: Provided always, that if the said Thomas Leavitt shall not, within three days after the granting of these Letters of Registration, register the same in the proper office in the Supreme Court at Sydney, in the said Colony of New South Wales, then these Letters of Registration, and all advantages whatsoever hereby granted, shall cease and become void.

In witness whereof, I have hereunto set my sign manual, and have caused the present Letters of Registration to be sealed with the seal of the said Colony of New South Wales, at Government House, Sydney, in New South Wales, this twenty-eighth day of May, in the year of our Lord one thousand eight hundred and eighty.

[L.S.] AUGUSTUS LOFTUS.

Improvements in Machinery for post marking and for obliterating stamps.

A.

SPECIFICATION of THOMAS LEAVITT, of Everett, Massachusetts, United States of America, machinist, for an invention entitled "Improvements in Machinery for post marking and for obliterating stamps on letters, post cards, and other articles."

THIS invention relates to a machine for post marking and for obliterating stamps on letters and postal cards, and to that particular class of such machines in which the letters and cards are passed between a type cylinder and an impression cylinder.

Figure 1 of the accompanying drawings is a plan of this improved cancelling machine; figure 2 is a front elevation of same; figure 3 is a side elevation; figure 4 is a vertical section on line *x x* of figure 2; figures 5, 6, 7, and 8 are details; figures 9 and 10 are respectively a plan and a side elevation of so much of a machine as is necessary to illustrate a modification of the feeding devices; and figure 11 is a partial longitudinal section of the feed pawl lever shown in figures 9 and 10, drawn full size.

AA are the side frames of the machine, connected together by tie-rods B and B^1 and the vertical plate C.

D is the type cylinder, and D^1 the impression cylinder, arranged side by side with their axes in the same horizontal plane, and mounted; the type cylinder in fixed bearings on the frames AA, and the impression cylinder in boxes D^2, which are fitted to housings D^3, so that they may be moved therein, the rear ends of the boxes D^2 being chambered to receive the open end of a tube, *a*, between the closed end of which and the bottom of the recess in the box is placed the spiral spring *b*, the tension of which may be varied at will by means of the set screw *c*, all as shown in figure 5.

The type cylinder D has formed therein near one end a circumferential groove, *d*, to receive the type-holders E and E^1, which are secured in position therein by the set screws *e e*, screwed into the flange d^1 of said cylinder, formed by cutting the groove *d* with their points pressing hard against the type-holders and forcing them against the inner wall of said groove.

The type-holders E and E^1 are each provided with a mortise cut through the same to receive the changeable type blocks, the sides of said mortises being parallel with each other, as shown in figure 8.

The holder E has cut upon its face surrounding the mortise formed therein the name of the Post Office and figures representing the year or such other lettering as may be necessary, and that does not require to be changed oftener than perhaps once a year.

Within the mortise formed in said holder E are set three type blocks, upon one of which is engraved the month, upon another the day of the month, and upon the third the hour of the day, and a clamping-plate, *g*, made tapering with its narrowest end outward, and fitted to a correspondingly shaped recess in the side of the mortise in said holder, in such a manner that said plate cannot be pulled out of the mortise with the type blocks when the magnet is applied to said blocks for the purpose of removing them to make necessary changes.

The type blocks are retained in position in the holder E by the set screw *h*, which passes freely through a smooth hole in the flange d^1 of the cylinder D, and is screwed into the holder E with its point pressing against the plate *g*, and forcing it against the two contiguous type blocks as shown in figure 7.

The mortise in the holder E^1 contains a single type block, preferably cylindrical in form, upon which is cut a letter or character to designate "collection," "delivery," or the station or sub-office, while the holder itself has formed thereon a series of bars or lines as shown.

The impression cylinder D^1 also has formed therein a circumferential groove, d^2, to receive the impression pad composed of the metal segment *i*, having one or more thicknesses of suitable elastic material, i^1, secured thereon by the screws i^2 and i^2, said pad being secured to the cylinder by means of the level edged lip or plate *j* (see figure 4) screwed firmly to the cylinder within the groove d^2, its bevelled edge overlapping the contiguous edge or end of the segment *i* and the single screw *k*, passing through the opposite end of said segment and screwing into the cylinder, all as shown in figures 4 and 6.

This method of attaching the impression pad to the cylinder is of great advantage, as it obviates entirely the necessity of removing the cylinder from the machine to renew the pad as heretofore.

D^4 is an endless belt, made of any suitable flexible material and any desirable length, which passes around the cut away portion of the cylinder D^1 and the impression pad, the object of which is to receive the impression from the type whenever the machine is in operation and the feeding devices fail to supply it with an article to be printed at each revolution of the printing cylinders.

By virtue of the reduced diameter or radius of the periphery of the impression cylinder upon the side opposite to where the impression is to be taken, the belt D^4 is moved forward only while the impression is being taken, and remains in a state of rest during the remaining portion of each revolution, by which means a much shorter belt will answer the purpose than if the belt were moving all of the time.

W is a weighted pulley placed within the lower fold or bight of the belt D^4, and held in position by end flanges, the purpose of which pulley is to keep the belt extended and acting in conjunction with the guide pins k^1 k^2 set in one of the brackets J, and over which the two parts of the belt D^4 pass in leaving and approaching the cylinder, to prevent the belt from being accidentally doubled and passed around the cylinder or entangled therewith.

The belt D may be of any desired length, and may be arranged as shown in connection with a cylinder having a portion of its periphery cut away, or where sufficient length of belt can be obtained the cylinder may be a full circle, and the belt be arranged to move all the time, it only being necessary to have the length of the belt sufficient to permit any ink which may be deposited thereon by the type to become sufficiently dried before the same place again comes between the cylinders, to prevent it from being transferred to the back of the letter and disfiguring it.

Improvements in Machinery for post marking and for obliterating stamps.

F is the driving shaft, mounted in bearings on the frames AA, and having secured thereon the fly-wheel F^1 and spur gear wheel F^2, which meshes or gears into and imparts motion to the gear wheel G, secured upon the end of the shaft of the cylinder D; upon the opposite end of which shaft is secured the gear-wheel H, which gears into and imparts motion to the gear-wheel H^1, secured upon the end of the shaft of the cylinder D^1, whereby said cylinders D and D^1 are made to revolve toward each other or in opposite directions and at the same speed.

I I^1 are a pair of feed rolls placed side by side above the cylinders D and D^1, the roll I having formed upon its surface a series of circumferential bands, the peripheries of which are roughened to produce frictional surfaces to assist in the proper feeding of the letters and cards presented to said feed rolls.

The roll I is mounted in fixed bearings in the frames AA, and has secured to the end of its shaft a gear-wheel, *l*, by means of which and the gear-wheel l^1 secured upon the shaft of the type cylinder D and intermediate gearing l^2 and l^3, rotary motion is imparted to said roll.

The roll I^1 has a smooth cylindrical surface, and is mounted in bearings in the lower ends of the pendent arms *m m*, and is forced into contact with the roll I by the tension of the springs *n n*, which yield to permit the passage between said rolls of a letter or card.

In the rear of the plate C, and supported thereby and by the stands or brackets J, is the hopper K, made preferably of a skeleton frame, and having its bottom inclined with the end towards the plate C, the lowest but not extending quite to said plate, an open space or throat *o* being left between the front edge of said bottom and the plate C, through which the letters *p* and cards p^1 may be fed from said hopper into the bight of the feed rolls I and I^1 or to the cylinders D and D^1.

To the back side of the plate C are secured in a vertical position two or more wires or rods, *q*, which serve as stops to limit the movement of the pile of letters and cards towards the plate C as they are forced toward it by the weighted follower L, and also to reduce the resistance to the downward movement of said letters or cards.

Two or more light springs, *r r*, are also secured to the back side of the plate C, and extend downward and backward so as to close the throat *o* and press against the front edge of the hopper bottom, as shown in figure 4, said springs being of just sufficient stiffness to prevent the accidental passage of a letter or card through the throat *o*, and to yield to allow such passage when the letter or card is forced downward by the feed pawl.

M is an adjustable bar forming one side of the hopper K, designed to adapt the hopper to different widths of letters by moving said bar nearer to or further from the fixed side of the hopper, which is always to be used as the gauge in placing the letters or cards in the hopper.

N is a stand secured to the front face of the plate C, and provided with the two guide rods N^1 N^1, upon which is mounted the cross head N^2, adapted to be reciprocated vertically thereon by means of the link O, levers O^1 and O^2, cam O^3, and spring O^4.

P is a three-armed feed pawl, provided upon its long arm with one or more toothed feed-plates *s* or s^1, adapted to engage with the front letter or card in the hopper, and pivoted at s^2 to the cross head N^2, as shown in figure 4.

The end of the pawl P, opposite to the feed-plates *s* s^1, is provided with an anti-friction truck, t^1, which travels up and down in the cam-shaped slot P^1 formed in the stand P^2, secured in a fixed position on the face of the plate C, and alternately engages with the inclined surface t^1 t^2, and at a projection, t^3, to throw the feed plates *s* and s^1 toward or from the pile of letters in the hopper at the proper time, a slot Q being cut through the plate C for the passage of the feed-pawl.

The third arm of the pawl P is pivoted to one end of the toggle link *u*, the opposite end of which is pivoted to the inner end of a rod, u^1, fitted to a bearing in the cross-head N^2, and surrounded by the spring w^2, the tension of which may be adjusted by means of the tubular screw w^3.

The action of the inclined surface t^1 of the cam slot P^1 upon the truck *t*, as the cross-head N^2 and the feed-pawl P is moved downward, causes the lower end of the feed-pawl P to be thrown outward or away from the letters or cards in the hopper, and as a consequence the toggle link *u* is brought in a horizontal position, and thus holds the pawl P away from the letters during its upward motion till the truck comes in contact with the inclined surface t^2 of the cam slot P^1, when the direct line of the toggle is broken and the tension of the spring u^2 causes the lower end of the pawl lever P to be suddenly thrown inwards towards the letters or cards till the truck *t* strikes the projection t^3, and when the pawl P commences to descend, the truck *t* passes off from the projection t^3, and the points of the teeth of the feed-plates *s* and s^1 engage with the surface of the front letter or card in the hopper, and as the pawl P is moved downward the letter or card is moved endwise through the throat *o*, compressing the springs *r r* sufficiently to allow the passage of the letter or card, and the said downward movement of the pawl lever P continuing till the end of the letter or card is seized by the feed-rolls I and I^1, which carry it onward till its lower end enters between the type and impression cylinders.

R is the ink-distributing cylinder, mounted in bearings in the frames AA, and receiving motion from the driving shaft by means of the gears *v*, v^1, v^2, and v^3.

R^1 is the inking roll, mounted in bearings in the upper ends of the levers S S^1, firmly secured upon opposite ends of the rocker shaft S^2, having its bearings in the frames A in such a manner that said roll may be intermittently moved from a position in contact with the ink-distributing roll R, where it receives ink, to a position in contact with the type cylinder or the type contained thereon.

This vibratory motion of the roll R^1 is obtained by means of the cam R^2, acting upon the truck R^3, mounted on a stud set in the end of the lever S^3, pivoted at r^1 to the lever S^1, and connected to it at a point between said pivot and the truck R^3 by means of the rod *w* which passes through the ear w^1 on an arm of said lever S^1, and is provided with an adjustable nut or head, w^2, said rod being surrounded by the spring w^3 of sufficient tension to overcome the tension of the springs a^1 a^1, which tend to hold the inking roll in contact with the type cylinder, the purpose of said spring being to force the levers S^3 and S^1 apart to the limit allowed by the adjustable head w^2 of the rod *w*, and to yield slightly when the inking roll R^1 is brought in contact with the distributing roll R.

T is an ink fountain in the form of a hollow cylinder, mounted upon a stud, a^2, having an eccentric bearing

Improvements in Machinery for post marking and for obliterating stamps.

bearing in the upper end of the stand U, pivoted to the frame A and provided with the adjusting screws b^1 and b^2, by which the position of said eccentric bearing may be varied to insure contact of the fountain with the distributing roll R when the eccentric stud a^2 is partially rotated in the direction indicated by the arrow.

The movement of the eccentric stud a^2 about its axis of motion is limited in either direction by the pin c^1 set therein, and working in a segmental recess cut in the end of the hub of the stand U.

The barrel of the ink fountain is provided with one or more holes, c^2, through which the ink placed therein passes to and is absorbed by the cloth or felt covering d^3 whenever said fountain is revolved by being brought in contact with the distributing roll R.

The fountain cylinder T is weighted upon the side opposite to the opening or openings c^2 in such a manner that, when not in contact with the distributing roll, said fountain shall always remain the same side up or with the openings c^2 uppermost, as clearly shown in figure 4.

In the interior of the ink fountain is placed a short cylinder of metal, e^1, which rolls around the inner periphery of the fountain, or perhaps more properly the inner periphery of the fountain rolls around it when said fountain is revolved, and thereby prevents an accumulation of ink upon the walls of the fountain chamber. The ink is introduced into the fountain through an opening in its end, which is closed by the plug e^2.

The front face of the follower L is covered with a thin sheet, e^3, of leather, cloth, or suitable material, to increase the frictional surface in contact with the rear letter or card, to prevent the last two letters being fed through the throat together, as is liable to be the case if a smooth metal surface is use.

Referring to figures 9, 10, and 11, illustrating a modification of the machine, A A are the side frames of the machine, C the vertically arranged plate, to the back side of which is secured the hopper B as shown.

D is the type cylinder, and D^1 the impression cylinder, constructed and arranged substantially as heretofore described.

The cylinders D and D^1 have secured to their shafts the gear wheels b and b^1 respectively, which gear into and are rotated by the two gear wheels c and c^1 respectively, the gear wheel c being mounted upon the driving shaft E, which has mounted thereon the fly or crank wheel E^1.

The shaft of the cylinder D has firmly secured to the end thereof opposite to the gear wheel b two cams, F and G, which act respectively upon the trucks d and e, mounted upon pins set in the movable ends of the levers H^1 and I^1, secured to the rocker shafts H and I as shown.

J is a feed lever pivoted at one end to the movable end of the lever K secured upon the rocker shaft H, and at or near the middle of its length to the upper end of the crooked link or connecting rod L, the lower end of which is pivoted to the movable end of the lever M secured upon the rocker shaft I, all so arranged that the lever J will have imparted to it an endwise motion towards the hopper, a downward motion of its inner end, an endwise motion away from the hopper, and an upward motion of its inner end, whereby the toothed feed-plates g g^1 are made to engage with the front letter or card contained in the hopper, and feed it downward till its lower end is seized by the cylinders D and D^1, and then recede therefrom and be moved upward out of contact with said letters or cards, said lever J working through a slot in the plate C as before described.

The feed-plates g and g^1 are formed upon or secured to the lever or pad h, which is pivoted between the ears i i on the lever J, said lever or pad h with the feed-plates g and g^1 secured thereon being rendered adjustable to vary the projection of the toothed plates into the hopper by means of the set screw j and spring k.

The truck d is held in contact with the cam F by the tension of the spring l attached at one end to the lever N, secured upon the rocker shaft H, and at the other end to some fixed part of the machine, and in like manner the truck e is held in contact with the cam G by the tension of the spring m attached at one end to the lever O, secured upon the rocker shaft I, and at the other end to the frame of the machine.

I claim—

The hopper, with inclined bottom, vertical abutment, and throat at its lowest end, follower L^1, and adjustable side bar M, for holding letters or post cards in a vertical or nearly vertical position, substantially as described.

The combination of a type cylinder and an impression cylinder, arranged side by side with their axes in the same horizontal plane or nearly so, a hopper constructed as claimed, and a feed pawl adapted to engage with the front letter or card and to feed the same to the printing cylinders, substantially as described.

The combination of printing cylinders and hopper as claimed with the feed rolls I and I^1, all arranged and operating substantially as described.

The combination of printing cylinders and hopper, as claimed, with two or more vertical rods or wires, q q, and two springs, r r, all arranged and operating substantially as described.

The combination of the reciprocating cross head N^2, the pivoted feed pawl P, having one or more feed plates s or s^1, and the anti-friction roller t, the stand P^2 having the cam slot P^1, the toggle link u, rod u^1, and the spring u^2, all arranged and operating substantially as described.

In combination with the impression cylinder D^1, the bevel-edged plate j^1 secured thereto, and the segment i covered with elastic material and secured to the cylinder by the segment i and screw k, so as to be easily removed, substantially as described.

The ink fountain T, weighted on one side, and having one or more openings at the opposite side, in combination with the absorbent covering d^3, the eccentric journal a^2 and the loose roller e^1 within said ink fountain, substantially as and for the purposes described.

The type cylinder D, having a groove d in combination with the mortised type-holder E or E^1, one or more type blocks set in the said holder, one or more set screws e screwed into the cylinder D to secure the said holder, and a set screw h to secure the type blocks, substantially as described.

The

Improvements in Machinery for post marking and for obliterating stamps.

The type cylinder and type-holder arranged as set forth, in combination with one or more type blocks filling the mortise in the holder, and made of steel to adapt them to be withdrawn by means of a magnet, substantially as described.

In combination with a mortised type-holder, having two or more type blocks, a tapering pressure plate, *g*, fitted in a taper recess in the side of the said mortise, and having the narrowest end outward, substantially as and for the purposes described.

The cylinder D, in combination with the blotter belt D^4 and guides k^1 and k^2, all arranged and operating substantially as described.

The lever J in combination with the pad or lever *h*, set screw *j*, spring *k*, and one or more toothed feed-plates secured to the pad *h*, substantially as and for the purposes described.

The printing cylinders and the hopper as claimed, in combination with the lever J, having one or more toothed feed-plates, and with mechanism for giving said lever an intermittent endwise motion and a vibratory motion, substantially as described.

The lever J, having one or more toothed plates or surfaces at one end, and pivoted at the other end to the lever K, in combination with rocker shaft H, lever H^1, rollers *d* and *e*, cams F and G, levers I^1 and O, connecting rod L and springs *l* and *m*, all arranged and operating substantially as described.

In witness whereof, I, the said Thomas Leavitt, have hereto set my hand and seal, this third day of January, one thousand eight hundred and eighty.

THOMAS LEAVITT.

This is the specification, marked A, referred to in the annexed Letters of Registration granted to Thomas Leavitt, this twenty-eighth day of May, A.D. 1880.

AUGUSTUS LOFTUS.

REPORT.

Sir, Sydney, 29 April, 1880.

We do ourselves the honor to report, in reply to your blank cover communication of the 9th instant, No. 2,861, that we find no objection to the issue of Letters of Registration for "Improvements in Machinery for post marking and obliterating stamps on letters, post cards, and other articles," in accordance with Mr. Thomas Leavitt's Petition, specification, drawings, and claim.

We have, &c.,

GOTHER K. MANN.

The Principal Under Secretary. THOS. RICHARDS.

[Drawings—two sheets.]

B.

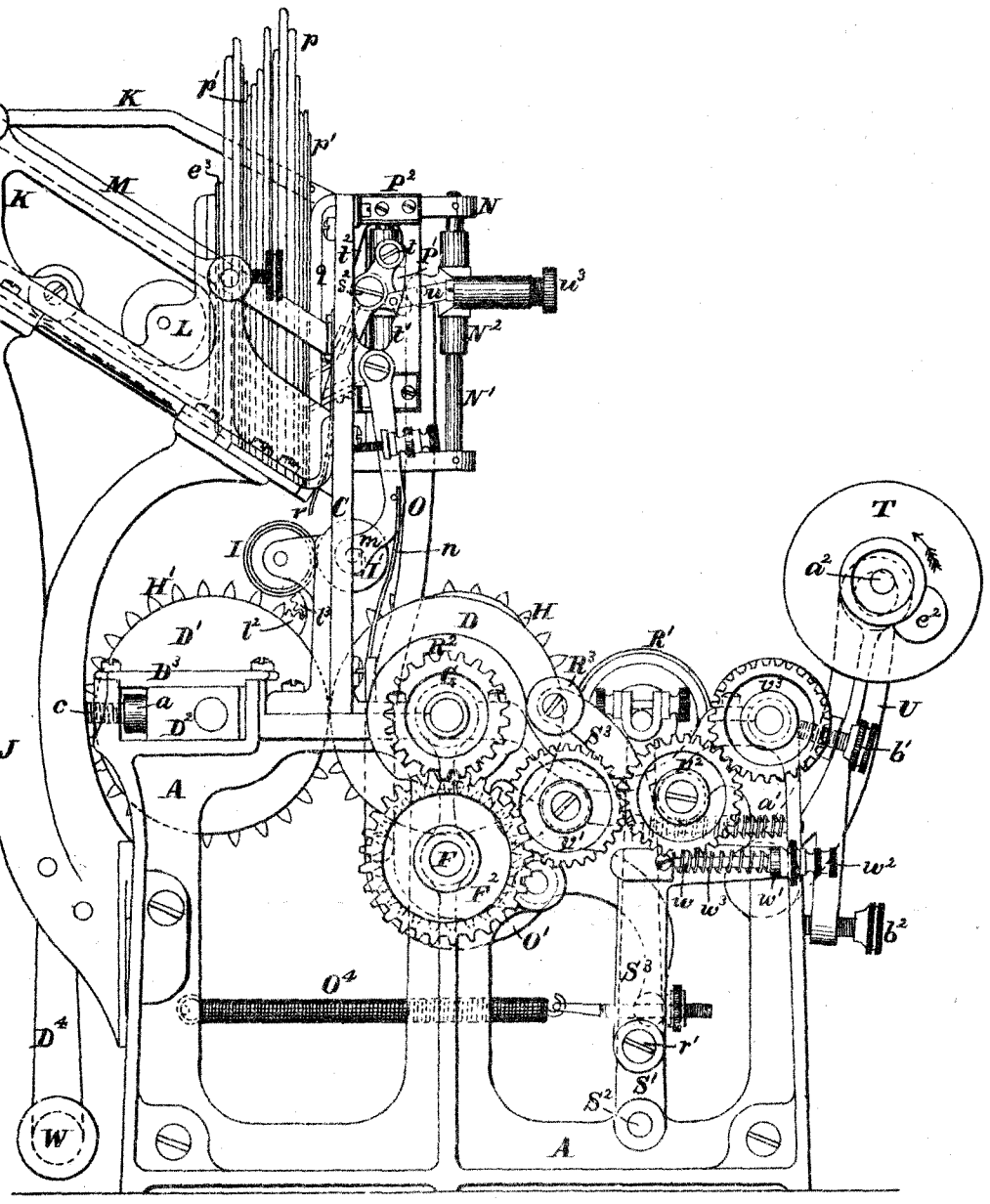

Fig.3.

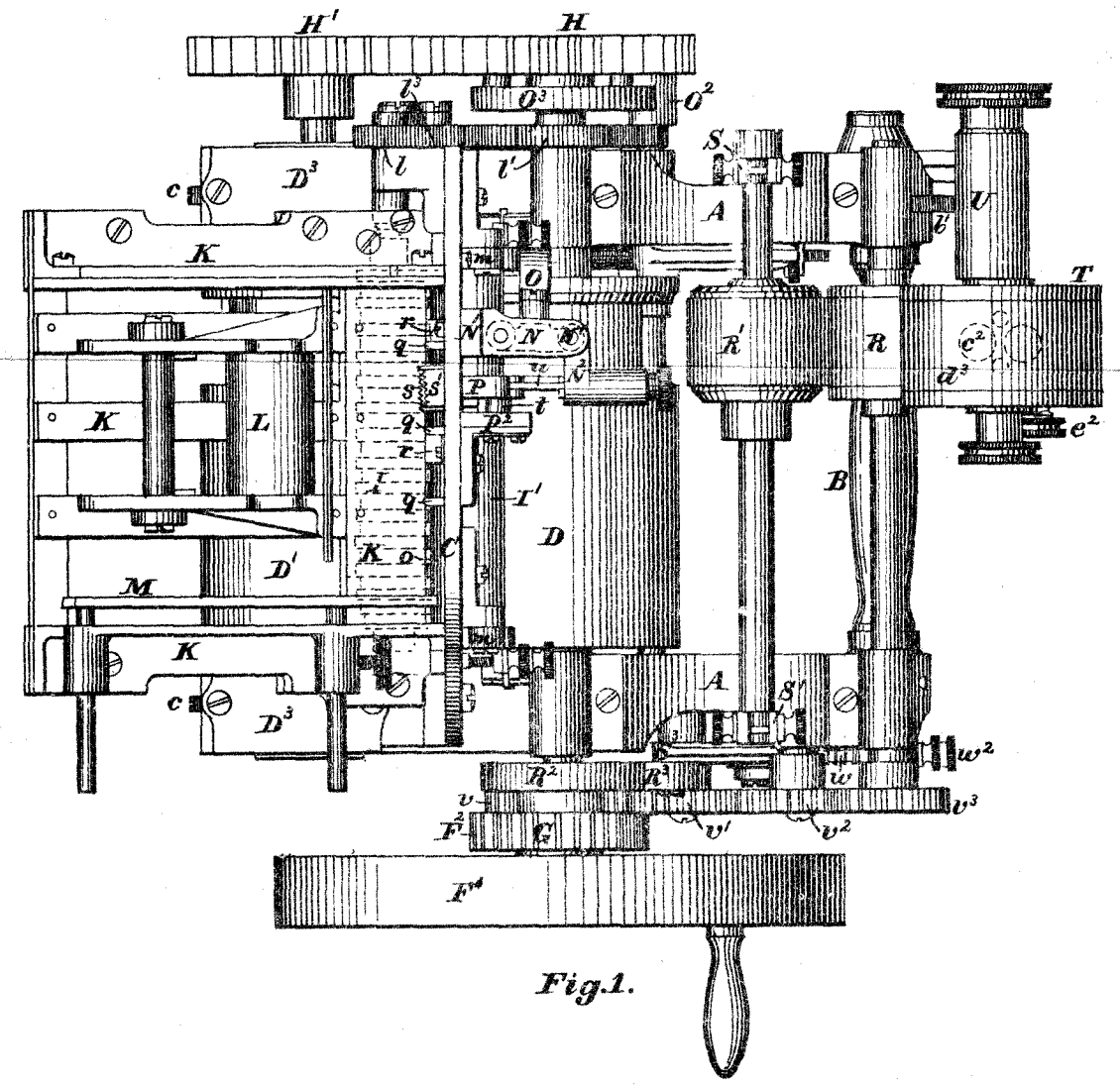

Fig.1.

This is the Sheet of Drawings marked "B" referred to in the annexed Letters of Registration granted to Thomas Leavitt this twenty eighth day of May - A.D. 1880.

"Augustus Lifters"

(357-)

PHOTO-LITHOGRAPHED AT THE GOVT. PRINTING OFFICE, SYDNEY, NEW SOUTH WALES.

"C"

[835]

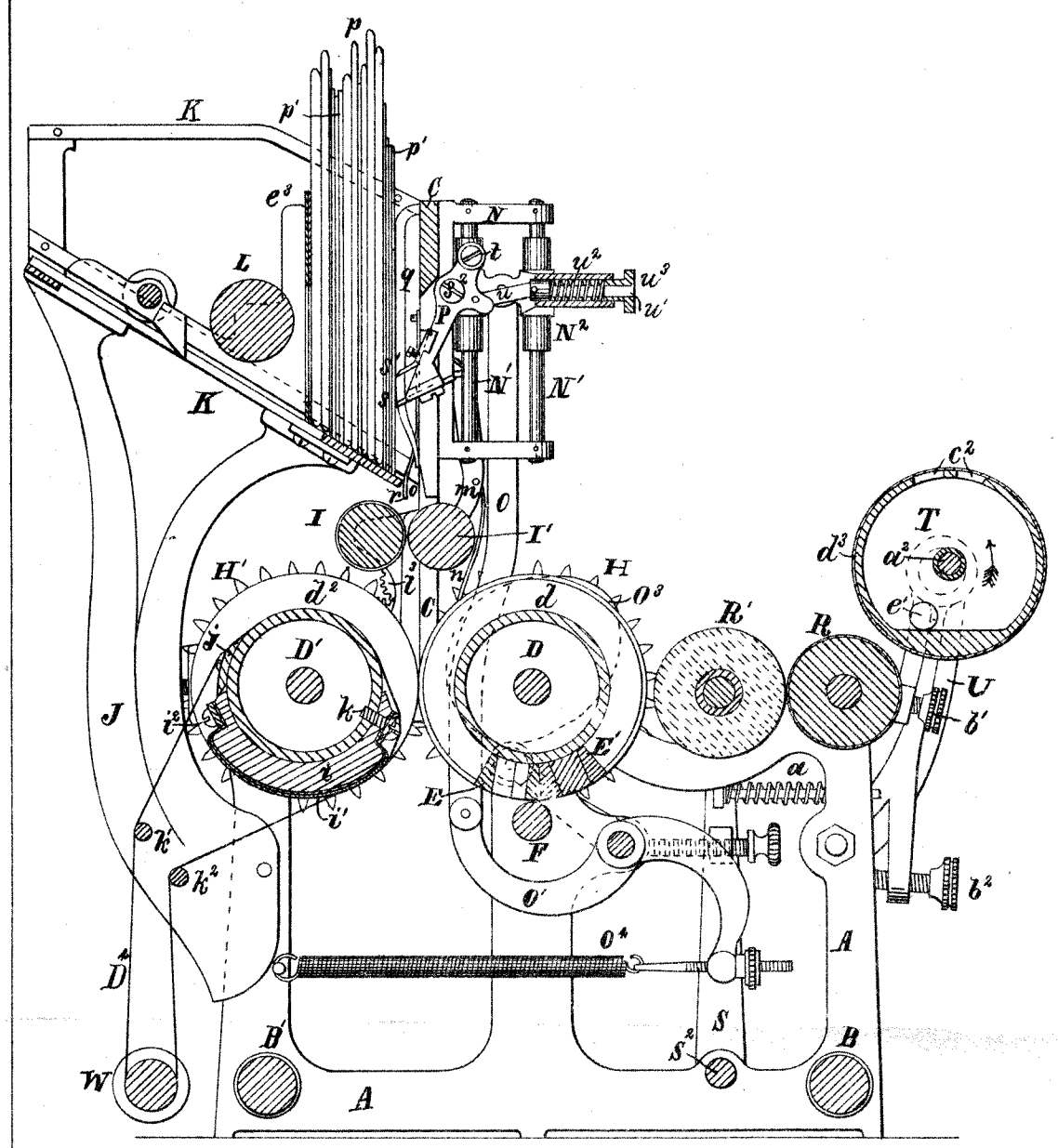

Fig. 4

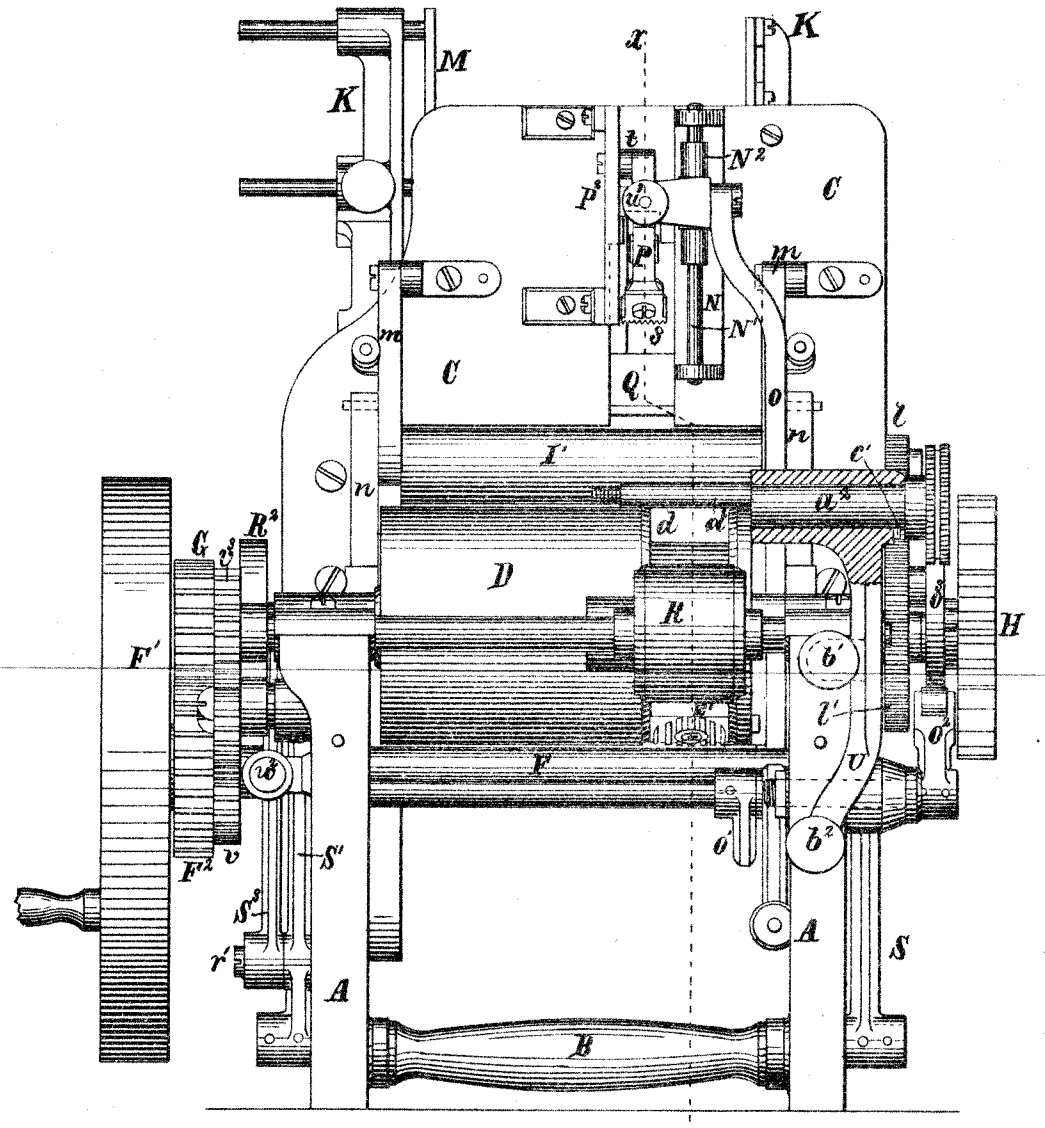

Fig. 2.

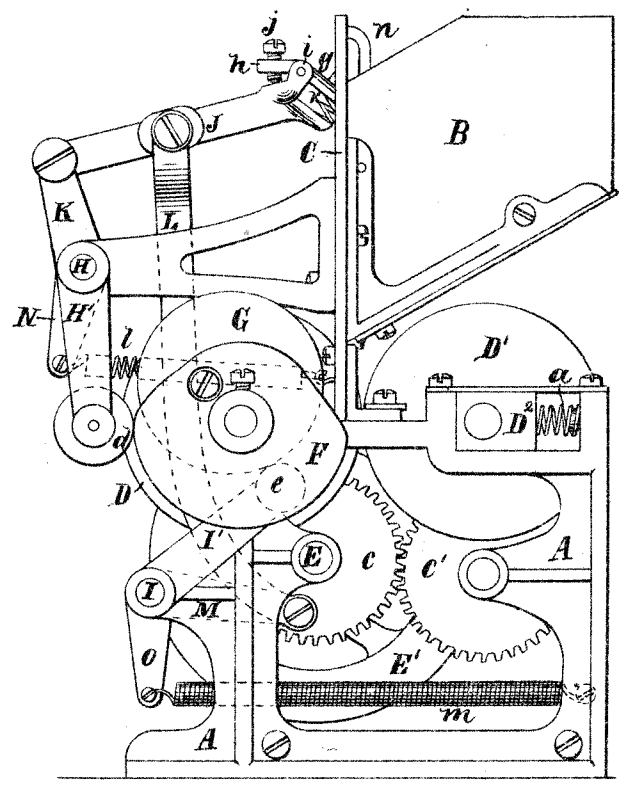

Fig. 10.

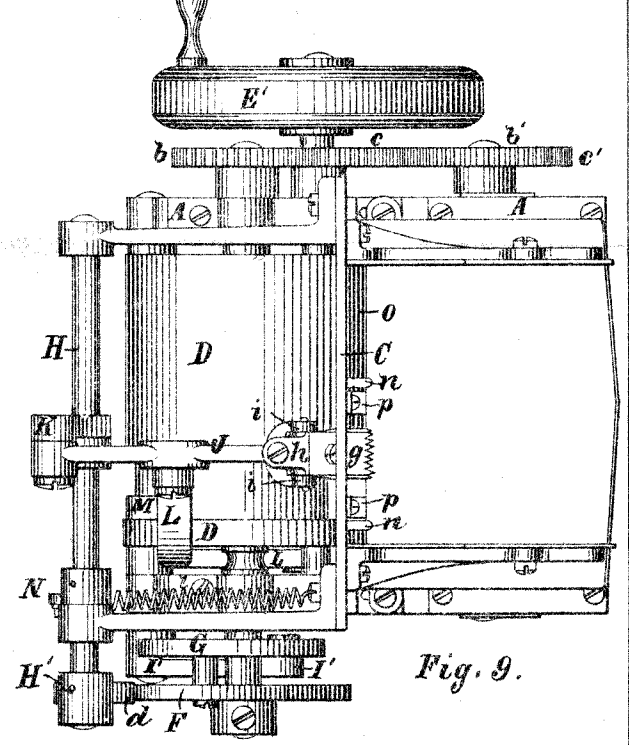

Fig. 9.

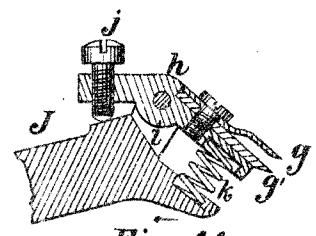

Fig. 11.

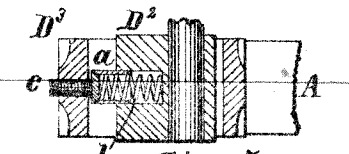

Fig. 5.



Fig. 8.

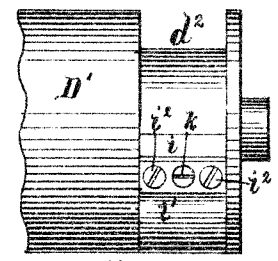

Fig. 6.

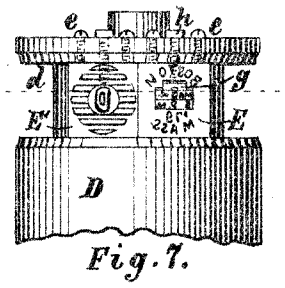

Fig. 7.

This is the sheet of Drawings marked "C" referred to in the annexed Letters of Registration granted to Thomas Leavitt this twenty eighth day of May — A.D. 1880. (357-)

" Augustus Loftus —

PHOTO-LITHOGRAPHED AT THE GOVT. PRINTING OFFICE, SYDNEY, NEW SOUTH WALES.

A.D. 1880, 28*th May*. No. 836.

IMPROVEMENTS IN THE MANUFACTURE OF AERATED AND OTHER BEVERAGES.

LETTERS OF REGISTRATION to David Johnson, for Improvements in the manufacture of Aerated and other Beverages for restorative and medicinal purposes.

[Registered on the 29th day of May, 1880, in pursuance of the Act 16 Vic. No. 24.]

BY His Excellency the Right Honorable Sir Augustus William Frederick Spencer Loftus (commonly called Lord Augustus Loftus), Knight Grand Cross of the Most Honorable Order of the Bath, a Member of Her Majesty's Most Honorable Privy Council, Governor and Commander-in-Chief of the Colony of New South Wales and its Dependencies.

TO ALL TO WHOM THESE PRESENTS SHALL COME, greeting:

WHEREAS David Johnson, of Wrexham, Wales, Great Britain, manufacturing and analytical chemist, hath by his Petition humbly represented to me that he is the author or designer of a certain invention or improvement in manufactures, that is to say, of an invention entitled "Improvements in the manufacture of Aerated and other Beverages for restorative and medicinal purposes," which is more particularly described in the specification which is hereunto annexed; and that he, the said Petitioner, hath deposited with the Honorable the Treasurer of the said Colony of New South Wales the sum of Twenty Pounds sterling, for defraying the expense of granting these Letters of Registration, as required by the Act of Council, sixteenth Victoria, number twenty-four; and hath humbly prayed that I would be pleased to grant Letters of Registration, whereby the exclusive enjoyment and advantage of the said invention or improvement might be secured to him for a period of fourteen years: And I, being willing to give encouragement to all inventions and improvements in the arts or manufactures which may be for the public good, and having received a report favourable to the prayer of the said Petition, from competent persons appointed by me to examine and consider the matters stated therein and to report thereon for my information, am pleased, with the advice of the Executive Council, and in exercise of the power and authority given to me by the said Act of Council, to grant, and do by these Letters of Registration grant unto the said David Johnson, his executors, administrators, and assigns, the exclusive enjoyment and advantage of the said invention or improvement, for and during the term of fourteen years from the date hereof; to have, hold, and exercise unto the said David Johnson, his executors, administrators, and assigns, the exclusive enjoyment and advantage thereof, for and during and unto the full end and term of fourteen years from the date of these presents next and immediately ensuing, and fully to be complete and ended: Provided always, that if the said David Johnson shall not, within three days after the granting of these Letters of Registration, register the same in the proper office in the Supreme Court, at Sydney, in the said Colony of New South Wales, then these Letters of Registration, and all advantages whatsoever hereby granted, shall cease and become void.

In witness whereof, I have hereunto set my sign manual, and have caused the present Letters of Registration to be sealed with the seal of the said Colony of New South Wales, at Government House, Sydney, in New South Wales, this twenty-eighth day of May, in the year of our Lord one thousand eight hundred and eighty.

[L.S.] AUGUSTUS LOFTUS.

Improvements in the manufacture of Aerated and other Beverages.

SPECIFICATION of DAVID JOHNSON, of Wrexham, Wales, Great Britain, manufacturing and analytical chemist, for an invention entitled "Improvements in the manufacture of Aerated and other Beverages for restorative and medicinal purposes."

THIS invention relates to liquids to which I apply the term "zoedone," or "life-giver," for the reason that they contain substances that are highly valuable as nerve tonics, and are very effectual in supplying the waste of nervous power consequent upon mental and physical labour and sickness.

In the preparation of my improved beverages I employ the chemical substances hereinafter specified, and combine them with medicine or medicinal substances, or with wine, spirit, syrup, or other liquids used as beverages.

The chemical substances which I employ are as follows, viz., a soluble phosphate of lime, of iron, of potass or of soda, or a lacto-phosphate, a pyrophosphate, or a hypophosphite of lime or of iron, or unoxidized phosphorus, or a compound of any or all of these substances; or I use a compound of strychnia or nux-vomica dissolved in hydrochloric acid, and mixed with any or all of these substances.

The chief object of the said invention is the production of aerated beverages prepared by the addition of the above-named chemical compound, consisting of the phosphates or other substances, or any or all of the same, or of either or any or all of these chemical substances, with the strychnia, to a suitable liquid, which may, in some instances, contain such substances as quinine, sarsaparilla, taraxicum, podophylin, pepsine, lacto-pepsine, gentian, hops, cardamums, and the like, or any of the various forms of salicine.

In practising my invention I prefer to proceed as follows, that is to say:—I first make a phosphorized, phosphuretted, or phosphated syrup, by combining the soluble phosphates, with or without the strychnia, in the manner ordinarily adopted by chemists, and then mixing with about ten times their bulk of strong saccharine liquid or syrup, which may be flavoured or medicated as desired, and coloured with cochineal or other harmless pigment. It is important that this order of mixture should be observed, as, if the flavouring or medicaments are added before the syrup is mixed with the phosphates, the iron will be precipitated, and therefore much of the restorative or medicinal value of the beverage will be lost, whereas when the above order or method of proceeding is observed, the beverage will keep perfectly clear, and the full strength of the phosphates will be retained.

I prefer to use the strychnia in the proportion of one thirtieth ($\frac{1}{30}$) of a grain for each pint of the aerated phosphated or phosphorized liquid.

The bottles or other vessels for containing the improved beverage are dosed with a suitable quantity, say from one (1) to three (3) ounces of this phosphorized or phosphuretted syrup, which is then aerated in the manner usually employed in aerating liquids, that is to say, by the use of water charged with carbonic acid gas. I prefer that the aerated water used for this purpose should be perfectly free from alkalinity, as I have found by experiment that gaseous alkaline water tends to make the beverage turbid after it has been kept a short time.

But although I consider that the most advantageous results may be obtained by applying my invention to the manufacture or preparation of aerated beverages, yet I wish it understood that I may also prepare my improved beverages for restorative, medicinal, or curative purposes, without aerating the same, the peculiar, novel, and important feature of the said invention being the combination or mixture of the phosphates or phosphorus above specified with the liquid to form a beverage, whether the same be aerated or otherwise.

In the addition of the aforesaid phosphated, phosphuretted, or phosphorized syrup to wines, spirits, fruit syrup, or fruit juice, care must be taken that these substances are at the time entirely free from acetous fermentation. I therefore mix with them, for their preservation, a small quantity of any suitable substance prior to the addition of the aforesaid syrup. I have found salicylic acid very advantageous for this purpose. The phosphated, phosphuretted, or phosphorized syrup is added to or mixed with the wine, syrup, or juice, in the proportion of from one (1) to two (2) fluid drams of the syrup to every wine-glassful of the liquid to be prepared.

When the beverage is manufactured or prepared for use in a climate where there are great variations of temperature, I modify my invention by using hoposulphite of lime, either with or without salicylic acid, mixed with the phosphorized, phosphuretted, or phosphated syrup, preferably in the proportion of from six to ten minims to each pint of the prepared beverage.

It is found that a phosphorized beverage is more suitable than a phosphated beverage for some persons, and that the same may be advantageously prepared with phosphoric acid instead of with the above-named phosphates, lacto-phosphates, pyro-phosphates, hypo-phosphites, or unoxidized phosphorus mixed with the syrup. I therefore, in some cases, prepare the liquid with phosphoric acid, in the proportion of about 20 to 30 minims of the acid to each pint of the beverage. When this liquid is taken, this acid will combine with the salts existing in the body, and produce therein the phosphates or phosphites which are so beneficial to the system.

Claims:—

First—The manufacture of aerated or other beverages, by the combination or mixture of the soluble phosphates of lime, iron, potass, and soda, or the lacto-phosphates, pyro-phosphates, or hypo-phosphites, or unoxidized phosphorus (or any or all of these substances) with water, wine, malt liquor, spirit, fruit or other syrup, or other liquid, for the purpose specified.

Second—The manufacture of an aerated or other beverage, by combining with water, wine, malt liquor, spirit, syrup, or the like, a mixture or solution of strychnia or nux-vomica, with a soluble phosphate, a lacto-phosphate, a pyro-phosphate, a hypo-phosphite, or unoxidized phosphorus, or with any or all of the same, for the purpose specified.

Third—The manufacture of an aerated or other beverage by the employment of hypo-sulphite of lime, with or without salicylic acid mixed with the phosphorized, phosphuretted, or phosphated syrup or liquid, for the purpose specified.

Fourth—

Fourth—The preparation of an aerated or other beverage with phosphoric acid, as and for the purpose specified.

In witness whereof, I, the said David Johnson, have hereto set my hand and seal, this eighteenth day of February, 1880.

DAVID JOHNSON.

Witness—
HENRY W. LAKE.

This is the specification referred to in the annexed Letters of Registration granted to David Johnson, this twenty-eighth day of May, A.D. 1880.

AUGUSTUS LOFTUS.

REPORT.

Sir,

Sydney, 26 April, 1880.

The application of Mr. David Johnson for Letters of Registration for "Improvements in the manufacture of Aerated and other Beverages" having been referred to us, we have examined the specification accompanying the same, and have now the honor to report that we see no objection to the issue of Letters of Registration as prayed for.

We have, &c.,
J. SMITH.
ALFRED ROBERTS.

The Principal Under Secretary.

A.D. 1880, 28*th May.* No. 837.

IMPROVEMENTS IN FLOORS FOR MALT KILNS.

LETTERS OF REGISTRATION to Louis Herrmann, for Improvements in Floors for Malt Kilns.

[Registered on the 29th day of May, 1880, in pursuance of the Act 16 Vic. No. 24.]

BY His Excellency the Right Honorable Sir Augustus William Frederick Spencer Loftus (commonly called Lord Augustus Loftus), Knight Grand Cross of the Most Honorable Order of the Bath, a Member of Her Majesty's Most Honorable Privy Council, Governor and Commander-in-Chief of the Colony of New South Wales and its Dependencies.

TO ALL TO WHOM THESE PRESENTS SHALL COME, greeting:

WHEREAS Louis Herrmann, of the city of Dresden, in the Kingdom of Saxony and Empire of Germany, hath by his Petition humbly represented to me that he is the author or designer of a certain invention or improvement in manufactures, that is to say, of an invention entitled "Improvements in Floors for Malt Kilns," which is more particularly described in the specification and the sheet of drawings which are hereunto annexed; and that he, the said Petitioner, hath deposited with the Honorable the Treasurer of the said Colony of New South Wales the sum of Twenty Pounds sterling, for defraying the expense of granting these Letters of Registration, as required by the Act of Council, sixteenth Victoria, number twenty-four; and hath humbly prayed that I would be pleased to grant Letters of Registration, whereby the exclusive enjoyment and advantage of the said invention or improvement might be secured to him for a period of fourteen years: And I, being willing to give encouragement to all inventions and improvements in the arts or manufactures which may be for the public good, and having received a report favourable to the prayer of the said Petition, from competent persons appointed by me to examine and consider the matters stated therein and to report thereon for my information, am pleased, with the advice of the Executive Council, and in exercise of the power and authority given to me by the said Act of Council, to grant, and do by these Letters of Registration grant unto the said Louis Herrmann, his executors, administrators, and assigns, the exclusive enjoyment and advantage of the said invention or improvement, for and during the term of fourteen years from the date hereof; to have, hold, and exercise unto the said Louis Herrmann, his executors, administrators, and assigns, the exclusive enjoyment and advantage thereof, for and during and unto the full end and term of fourteen years from the date of these presents next and immediately ensuing, and fully to be complete and ended: Provided always, that if the said Louis Herrmann shall not, within three days after the granting of these Letters of Registration, register the same in the proper office in the Supreme Court, at Sydney, in the said Colony of New South Wales, then these Letters of Registration, and all advantages whatsoever hereby granted, shall cease and become void.

In witness whereof, I have hereunto set my sign manual, and have caused the present Letters of Registration to be sealed with the seal of the said Colony of New South Wales, at Government House, Sydney, in New South Wales, this twenty-eighth day of May, in the year of our Lord one thousand eight hundred and eighty.

[L.S.] AUGUSTUS LOFTUS.

Improvements in Floors for Malt Kilns.

SPECIFICATION of LOUIS HERRMANN, of the city of Dresden, in the Kingdom of Saxony and Empire of Germany, for an invention entitled "Improvements in Floors for Malt Kilns."

THE object of this invention is to combine in the floors of the malt kilns a high degree of efficiency in their two chief requirements, namely, abundant air-passage and durability under the weight and manipulations of the attendants in loading and unloading the kiln and in turning the malt during the process of drying. These two essential conditions for the best results in practice I attain by means of a wire fabric produced and applied in the shape of hurdles of peculiar structure, forming the subject of the present invention. It involves the use of two dissimilar sizes of wire, those preferably adopted in the manufacture being known by the trade designations of No. 12 and No. 2 wire gauge. The first of these constitutes, as it were, the warp of the fabric, each such wire being at regular intervals bent into the form of an eye, the inner diameter of which equals that of the coarser No. 2 wire. This coarser wire may be termed the weft of the fabric; it consists of straightened rods upon which the warp wires of a convenient uniform length are strung, in a manner forming large hurdles. These hurdles are afterwards joined laterally and in direction of their length in a peculiar manner, hereinafter fully described, producing a continuous even surface of any required extent in length or width.

The eyes of the warp wires are previous to their combination into hurdles subjected to a lateral pressure, so as to indent and interlock the lapping wires of each eye to the amount required for contracting the spaces between the straight parallel portions of these wires to one-twentieth of an inch nearly, which is equal to about seventy-five wires and spaces for each lateral foot of hurdle. This amount of space between the wires provides an abundant passage for hot air, and while permitting the sifting of roots of the grain, the malt grains will neither jam into nor fall through these rounded spaces.

The invention will be more fully understood upon reference to the accompanying drawing, in which similar letters refer to like parts in the several views, of which fig. 1 is a sectional view of the improved fabric at natural size.

Fig. 2 is a plan of the same, showing also the manner of joining the hurdles in the direction of their length.

Fig. 3 illustrates the method of interlocking the ends of hurdles in the direction of their width.

Fig. 4 is a sectional side view, and fig. 5 a sectional end view, representing the manner of resting the improved wire fabric upon the supporting beams and intermediate net-irons.

Having in the foregoing amply described the manner of combining the warp wires *a a a* with the heavier weft wires *b b*, to form a hurdle of the improved fabric, I will now proceed to describe the improved methods of joining these hurdles to form a kiln floor of any required size, without presenting a single obstruction or vulnerable place on the entire surface of the wire structure.

After the operations of bending and pressing the eyes of a series of warp wires of a uniform length, the ends of these wires are prepared for the final interlocking of two hurdles by shearing through the end eyes in the manner shown at *c*, in fig. 3. It is readily evident that the remaining halves of eyes on the abutting ends of two hurdles will interlock in the manner of the solid eyes, and after the insertion of a weft *b*, present no indication of this joint upon the surface of the fabric, and in nowise impair its great strength. The end hurdles or sections of a series connected in the above manner may be prepared of wires of any suitable number of eyes, to adapt the whole to a given length of kiln, or the ends may be sheared off or trimmed to length in any other convenient manner.

I have in practice adopted the use of 312 warp wires, *a a*, for each hurdle, making these of a uniform width of 50 inches, and varying only the width of the outside series of hurdles to make up any required total width of kiln floor. The straight weft wires *b b* are cut to a uniform length, exceeding the effective width of the hurdle about 2 inches; and after forcibly drawing the strung warp wires *a a* together laterally by means of suitable clamps, they are confined securely between collars *e e*, held in place upon the projecting ends of the weft wires *b b*, by means of recesses *d d*. The distance between these recesses serves as an accurate gauge for uniformity in the lateral compression of the hurdles. Both recesses *d d* in each weft wire *b* are in the same plane, and this plane must conform with the top surface of the hurdle, so that when two hurdles or series of hurdles are placed side by side, the projecting ends of the weft wires *b b* may, together with their collars *e e*, be interposed under the warp wires, until the latter are brought into the required level and close contact for perfect uniformity of the surface. The over-lapping ends of the weft wires form a very efficient support for the contiguous edges of the hurdles.

An entire kiln floor constructed of the improved wire hurdles, and joined in the manner hereinabove described, is so rigid and self-contained as to require no special means of fastening upon the very simple supporting structure. This consists preferably of a series of transverse iron beams, I I, figs. 4 and 5, upon which rest the longitudinal bearers *i i*, of flat bar-iron.

These bearers run parallel with the warp wires of the hurdles, and are so divided as to present a narrower space under every longitudinal joint in the wire fabric, thereby providing increased support for the edges of the several series of hurdles.

Improvements in Floors for Malt Kilns.

I do not broadly claim, as of the present invention, the combination of the bent warp wires with the straight weft wires, nor on the other hand do I confine myself to any particular number or gauge of wire; but what I claim as novel and original is—

1. As an improvement in floors for malt kilns, the combination of bent warp wires *a a*, recessed weft wires *b b*, and collars *e e*, to form hurdles, in the manner and for the purpose described.
2. The combination of the divided and interlocking end eyes of two abutting hurdles, with a weft wire *b*, as and for the purpose set forth.
3. The combination of the projecting ends of weft wires *b b*, of one hurdle with the outer warp wires *a a* of the other hurdle, for giving a reciprocal support to the edges of contiguous hurdles, in the manner described.

In witness whereof, I, the said Louis Herrmann, have hereto set my hand and seal, this third day of February, in the year of our Lord one thousand eight hundred and eighty.

LOUIS HERRMANN.

Witnesses—

WILHELM WIESENHUTTER, of Dresden.
MARTIN KÖRNER, of Dresden.

This is the specification referred to in the annexed Letters of Registration granted to Louis Herrmann, this twenty-eighth day of May, A.D. 1880.

AUGUSTUS LOFTUS.

REPORT.

Sir, Sydney, 29 April, 1880.

We do ourselves the honor to state that we find no objection to the issue of Letters of Registration for "Improvements in Floors for Malt Kilns," in accordance with Mr. Louis Herrmann's Petition, specification, drawings, and claim, transmitted for our report under your blank cover communication of the 17th instant, No. 3,118.

We have, &c.,
GOTHER K. MANN.
ROBERT GEO. MASSIE.

The Principal Under Secretary.

[Drawings—one sheet.]

Fig. 1.



Fig. 2.

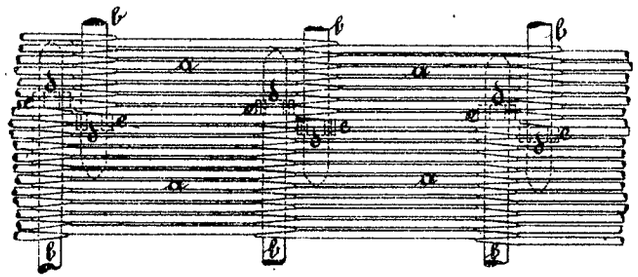

Fig. 3.

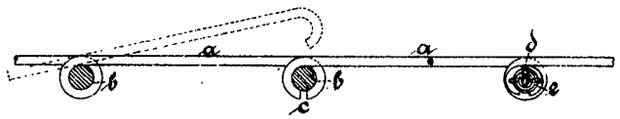

Fig. 4.

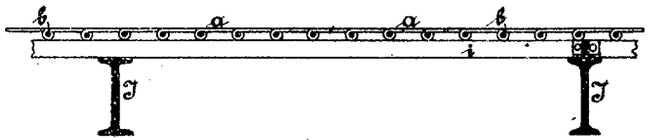

Fig. 5.

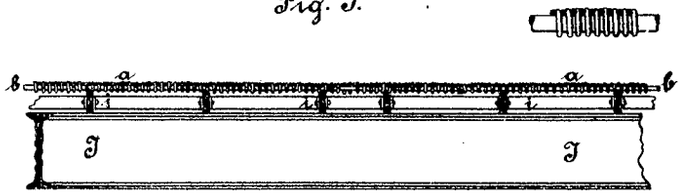

Signed in the presence of
Wm Chelm Wilsenhütter
Martin Körner
Dresden, December 22d 1879

Louis Hermann

This is the Sheet of Drawings referred to in the annexed Letters of Registration granted to Louis Hermann this twenty eighth day of May — A.D. 1880
(Sig: 357.)

Augustus Loftus.

PHOTO-LITHOGRAPHED AT THE GOVT. PRINTING OFFICE
SYDNEY, NEW SOUTH WALES.

A.D. 1880, 15*th June*. No. 838.

IMPROVEMENTS IN STUMP-EXTRACTORS.

LETTERS OF REGISTRATION to Harry Mohun and James Cock, for Improvements in Stump-extractors.

[Registered on the 15th day of June, 1880, in pursuance of the Act 16 Vic. No. 24.]

BY HIS EXCELLENCY THE RIGHT HONORABLE SIR AUGUSTUS WILLIAM FREDERICK SPENCER LOFTUS (commonly called LORD AUGUSTUS LOFTUS), Knight Grand Cross of the Most Honorable Order of the Bath, a Member of Her Majesty's Most Honorable Privy Council, Governor and Commander-in-Chief of the Colony of New South Wales and its Dependencies.

TO ALL TO WHOM THESE PRESENTS SHALL COME, greeting:

WHEREAS HARRY MOHUN, of Sydney, Australia, engineer, and JAMES COCK, of Sydney, Australia, gentleman, have by their Petition humbly represented to me that the said Harry Mohun is the author or designer of a certain invention or improvement in manufactures, that is to say, of an invention of "Improvements in Stump-extractors," which is more particularly described in the specification and the sheet of drawings which are hereunto annexed; that the said James Cock is the assignee of one half share or interest in the said invention; that they are desirous that Letters of Registration for the said invention may be granted to them, the said Harry Mohun and James Cock; and that they, the said Petitioners, have deposited with the Honorable the Treasurer of the said Colony of New South Wales the sum of Twenty Pounds sterling, for defraying the expense of granting these Letters of Registration, as required by the Act of Council, sixteenth Victoria, number twenty-four; and have humbly prayed that I would be pleased to grant Letters of Registration, whereby the exclusive enjoyment and advantage of the said invention or improvement might be secured to them for a period of fourteen years: And I, being willing to give encouragement to all inventions and improvements in the arts or manufactures which may be for the public good, and having received a report favourable to the prayer of the said Petition, from competent persons appointed by me to examine and consider the matters stated therein and to report thereon for my information, am pleased, with the advice of the Executive Council, and in exercise of the power and authority given to me by the said Act of Council, to grant, and do by these Letters of Registration grant unto the said Harry Mohun and James Cock, their executors, administrators, and assigns, the exclusive enjoyment and advantage of the said invention or improvement, for and during the term of fourteen years from the date hereof; to have, hold, and exercise unto the said Harry Mohun and James Cock, their executors, administrators, and assigns, the exclusive enjoyment and advantage thereof, for and during and unto the full end and term of fourteen years from the date of these presents next and immediately ensuing, and fully to be complete and ended: Provided always, that if the said Harry Mohun and James Cock shall not, within three days after the granting of these Letters of Registration, register the same in the proper office in the Supreme Court, at Sydney, in the said Colony of New South Wales, then these Letters of Registration, and all advantages whatsoever hereby granted, shall cease and become void.

In witness whereof, I have hereunto set my sign manual, and have caused the present Letters of Registration to be sealed with the seal of the said Colony of New South Wales, at Government House, Sydney, in New South Wales, this fifteenth day of June, in the year of our Lord one thousand eight hundred and eighty.

[L.S.] AUGUSTUS LOFTUS.

Improvements in Stump-extractors.

SPECIFICATION.

TO ALL TO WHOM THESE PRESENTS SHALL COME: Whereas I, the undersigned HARRY MOHUN, of Sydney, Australia, am in the possession of an invention hereinafter described, and whereas I have assigned and made over to Mr. JAMES COCK, of , one half share of the said invention, we, HARRY MOHUN aforesaid and the said Mr. JAMES COCK, send greeting:

WHEREAS we, the aforesaid Harry Mohun and Mr. James Cock, are desirous of obtaining Letters of Registration for securing unto us Her Majesty's special license that we, our executors, administrators, and assigns, or such other as we or they should or may at any time agree with and no other, should and lawfully might, from time to time, and at all times during the term of fourteen years to be computed from the day on which this instrument is left at the office of the Colonial Secretary at Sydney, make, use, exercise, and vend within the Colony of New South Wales, an invention for improvements in the method of extracting stumps of trees for the purpose of clearing land; and in order to obtain the said Letters of Registration we must, by an instrument in writing under our hand, particularly describe and ascertain the nature of the said invention and in what manner the same is to be performed: Now know ye, that we, the said Harry Mohun and James Cock, do hereby declare the nature of the said invention and the manner performed, to be particularly described and ascertained in and by the following statement and description, reference being had to the drawing hereunto annexed and to the letters marked thereon, which indicate the parts therein referred to, and herein particularly described and explained, that is to say, our invention consists in the application of a right and left handed screw, upon which traverse two nuts, the aforesaid nuts having cast upon them two trunnions upon each nut, upon which two levers work, their terminating point being attached to the chain which is applied to the stump, the screw being worked by one lever fitted upon each end of the said screw. Upon the levers are fitted clutches working into ratchets fixed at either end of screw, which as the levers are pulled down by manual power turn the screw, which cause the nuts to traverse the (each) end, consequently expanding the levers and pulling down the chain with immense power, as hereafter detailed.

A is a screw, 6 inches diameter or less, but shown in drawing as 6 inches; the said screw has a right and left hand thread of ½ inch pitch.

B is a nut, either cast iron or gun-metal, with two trunnions cast upon them in one piece, the trunnions being 5″ diameter. These nuts traverse one to the right and the other to the left, each nut having a thread of 8 inches.

C are two levers of wrought iron, 2 inches square, with eyes on each arm D, which revolve upon the trunnions aforenamed. Each lever C in commencing to draw stump is in a vertical position, which, as the screw is turned, the nuts traverse towards each end, cause the two levers C to expand until they lie in a parallel position with the screw. Each lever is (2′ 6″) two feet 6 inches long; and should the stump not be lifted completely by the first lift, the screw and nut and levers are run back and applied again, the time calculated to draw any stump being thirty minutes.

E is a ratchet, one being fixed at each end of the screw.

F is a lever of iron, with a clutch, G, fitted upon it. One lever and clutch G is fitted upon each end of the screw. These levers F are 10 feet in length, and worked by one man at each. As the levers F are pulled down the clutch G falls into the ratchet E and turns the screw, which causes the nuts B to traverse thread, at the same time expanding the levers.

H is a curved pulley of 10 inches diameter, over which runs the chain I, the said chain I being attached to levers C.

After a chain has been fastened around the stump to be extracted, the chain I is attached to the chain on the stump. When this is done the manual power is applied to the levers F, when the levers C expand, exerting a pulling strain of 200 tons upon the stump, pulling it out sideways.

The size here specified we do not bind ourselves to, as we prefer making several size machines, smaller machines not requiring the same strength.

The object of this invention is for clearing land from trees or stumps, a necessity having existed for some long time.

Having thus described the nature of our invention and the manner in which the same is to be performed, we claim (and we do hereby for ourselves, our heirs, executors, administrators, and assigns, covenant with Her Majesty, Her Heirs and Successors),—

That we believe the said invention, as to the public use and service thereof, and that we do not know or believe that any other than ourselves is the true and first inventor of the said invention, and that we will not deposit these presents at the office of the Colonial Secretary in Sydney with any such knowledge or belief as last aforesaid.

In witness whereof, we have hereunto set our hand and seal, this twenty-ninth day of April, one thousand eight hundred and eighty.

HARRY MOHUN.
JAMES COCK.

This is the specification referred to in the annexed Letters of Registration granted to Harry Mohun and James Cock, this fifteenth day of June, A.D. 1880.

AUGUSTUS LOFTUS.

REPORT.

Improvements in Stump-extractors.

REPORT.

Sir, Sydney, 13 May, 1880.

We do ourselves the honor to state that we see no objection to the issue of Letters of Registration in favour of Messrs. John Harry Mohun and James Cock, for an "Invention of Improvements in Stump-extractors," in accordance with their Petition, specification, drawings, and claim, transmitted for our report under your blank cover communication of the 3rd instant, No. 3,494.

We have, &c.,
GOTHER K. MANN.
JOHN WHITTON.

The Principal Under Secretary.

[Drawings—one sheet.]

Harry Mohun and James Cocks Stump Extractor.

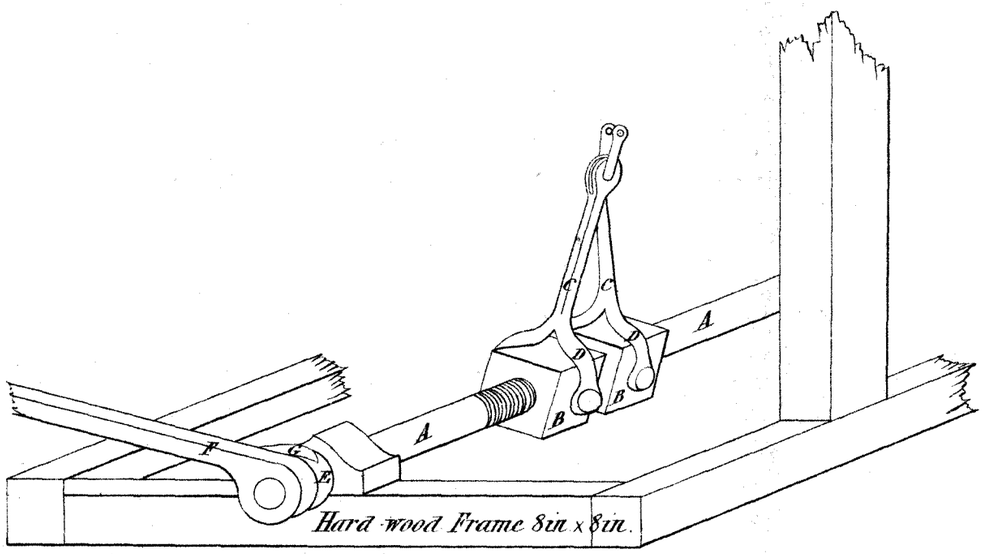

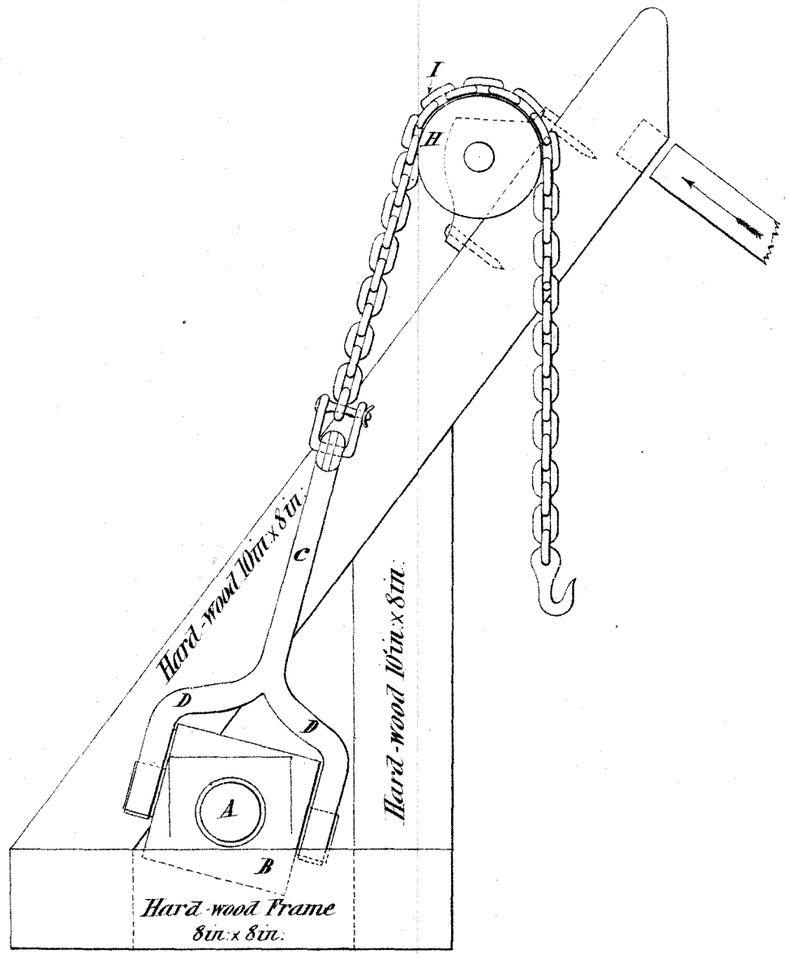

Harry Mohun
James Cock

This is the Sheet of Drawings referred to in the annexed Letters of Registration granted to Harry Mohun, and James Cock, this fifteenth day of June A.D. 1880.

Augustus Loftus.

Sig 357.

PHOTO-LITHOGRAPHED AT THE GOVT. PRINTING OFFICE, SYDNEY, NEW SOUTH WALES.

A.D. 1880, 15*th June*. No. 839.

IMPROVEMENTS IN RAILWAY CROSSINGS AND SWITCHES, &c.

LETTERS OF REGISTRATION to Joseph Stokes Williams, for Improvements in Railway Crossings and Switches, &c.

[Registered on the 15th day of June, 1880, in pursuance of the Act 16 Vic. No. 24.]

BY HIS EXCELLENCY THE RIGHT HONORABLE SIR AUGUSTUS WILLIAM FREDERICK SPENCER LOFTUS (commonly called LORD AUGUSTUS LOFTUS), Knight Grand Cross of the Most Honorable Order of the Bath, a Member of Her Majesty's Most Honorable Privy Council, Governor and Commander-in-Chief of the Colony of New South Wales and its Dependencies.

TO ALL TO WHOM THESE PRESENTS SHALL COME, greeting:

WHEREAS JOSEPH STOKES WILLIAMS, of Riverton, New Jersey, United States of America, now of Glasgow, in the county of Lanarch, North Britain, hath by his Petition humbly represented to me that he is the author or designer of a certain invention or improvement in manufactures, that is to say, of an invention of "Improvements in Railway Crossings and Switches and the means or apparatus for signalling upon or operating mechanism connected with lines of railway, and in the construction of posts or supports for carrying signals, and for other purposes," which is more particularly described in the specification, marked A, and the eight sheets of drawings, marked B, C, D, E, F, G, H, and I, respectively, which are hereunto annexed; and that he, the said Petitioner, hath deposited with the Honorable the Treasurer of the said Colony of New South Wales the sum of Twenty Pounds sterling, for defraying the expense of granting these Letters of Registration, as required by the Act of Council, sixteenth Victoria, number twenty-four; and hath humbly prayed that I would be pleased to grant Letters of Registration, whereby the exclusive enjoyment and advantage of the said invention or improvement might be secured to him for a period of fourteen years: And I, being willing to give encouragement to all inventions and improvements in the arts or manufactures which may be for the public good, and having received a report favourable to the prayer of the said Petition, from competent persons appointed by me to examine and consider the matters stated therein and to report thereon for my information, am pleased, with the advice of the Executive Council, and in exercise of the power and authority given to me by the said Act of Council, to grant, and do by these Letters of Registration grant unto the said Joseph Stokes Williams, his executors, administrators, and assigns, the exclusive enjoyment and advantage of the said invention or improvement, for and during the term of fourteen years from the date hereof; to have, hold, and exercise unto the said Joseph Stokes Williams, his executors, administrators, and assigns, the exclusive enjoyment and advantage thereof, for and during and unto the full end and term of fourteen years from the date of these presents next and immediately ensuing, and fully to be complete and ended: Provided always, that if the said Joseph Stokes Williams shall not, within three days after the granting of these Letters of Registration, register the same in the proper office in the Supreme Court, at Sydney, in the said Colony of New South Wales, then these Letters of Registration, and all advantages whatsoever hereby granted, shall cease and become void.

In witness whereof, I have hereunto set my sign manual, and have caused the present Letters of Registration to be sealed with the seal of the said Colony of New South Wales, at Government House, Sydney, in New South Wales, this fifteenth day of June, in the year of our Lord one thousand eight hundred and eighty.

[L.S.] AUGUSTUS LOFTUS.

Improvements in Railway Crossings and Switches, &c.

A.

SPECIFICATION of JOSEPH STOKES WILLIAMS, of Riverton, New Jersey, United States of America, now of Glasgow, in that part of the United Kingdom of Great Britain and Ireland called Scotland, for the invention of "Improvements in Railway Crossings and Switches, and the means or apparatus for signalling upon or operating mechanism connected with lines of railway, and in the construction of posts or supports for carrying signals and for other purposes."

THE said invention relates firstly to improvements in railway crossings, switches, and the apparatus or means for signalling upon or operating mechanism connected with lines of railway, which improvements are applicable in combination with and partly are improvements or modifications in the construction, arrangement, or combination of the subject matter of my previous patent.

In order to construct and arrange the switch-rails which afford the means for crossing undivided rails so as to ensure the proper relative working and position of the same, I support the switch-rails upon chairs which are so formed and placed as to prevent the rocking or undue deflection of the switch-rails by the weight of the vehicles or rolling stock, so as to avoid the possibility of the flanges of the wheels striking or riding the main line rails, or the displacing or straining of the switch-rails or parts in combination therewith; these supports or chairs are formed with both bearing surfaces and means for bolting or otherwise securing in position the undivided rails and also the switch-rails.

In order to obviate the use of a main line rail of reduced width throughout the length of the switch, and practically neither to lessen the bearing surface for the wheels nor the strength of the rail, I form a recess upon the outer portion of the head of the main line rail at the part of the same where the switch-rail is not of sufficient height to carry the flanges of the wheels over or clear of the said main line.

In the accompanying drawings on sheet 1, figure 1 is a plan of a switch provided with these improvements, and figure 2 is a side view of the same. Figure 3 is a side view of the main line rail, showing the recess in the same, and figures 4, 5, and 6 are transverse sections on the lines $x\ x$, $x^1\ x^1$, $x^2\ x^2$; figure 2 showing the relative positions of the main line rail and switch-rail. Figures 7, 8, and 9 are similar sections to figures 4, 5, and 6, showing a switch-rail of less depth than the main line rail. Figure 10 is a transverse section of my improved switch on the line $x^3\ x^3$. Figure 1 and figure 11 is a similar view on the line $x^4\ x^4$, showing the means for facilitating the adjustment of the switch-rails and retaining the same in position.

In these figures *a a* represent the main line rails, and *b b* the side line rails; *c d* are the switch-rails; *e* represents the connecting rod; a^1 represents the recess in the main line rail *a*; *f f* represent the chairs. By forming this recess at an angle to the surface of the main line, the switch-rail *d* can enter this recess, and its end will be below the surface of the main line rail. The switch-rail *d* is supported upon plates or chairs *f* as hereinbefore described. When the switch-rails are adjusted to direct the vehicles to or from the crossing-line, wheels of the narrowest tread will extend over the switch-rail *d*, so that as the wheels traverse the switch-rails their flanges are kept clear of the main line. When I use a rail or plate *d* of less height than the main line rail for the switch-rail which is placed outside the gauge of the main line, I employ chairs or supports, *f*, of such height as to secure the necessary variations in the height of the switch-rail and the main line.

The tapered switch-rail *c*, which is provided with a guard-rail c^1, I cast of steel, or form such switch-rail by means of dies or rolls. The recessed main line rail *a* is also formed by special rolls or dies, or may be planed or cut to the desired shape; the switch-rail *d* employed outside the line has its necessary or special form imparted to it in a similar manner. In some cases, I so arrange the switch-rail *d* and the rail of the main line *a* that the switch-rail can be placed in a recess in the main line rail and also lap the same; such arrangement will ensure a bearing surface for wheels of the narrowest tread. The tapered switch-rail *c* and guard-rail c^1 in combination therewith are also supported on chairs or plates, *f*, which are keyed or bolted with the main line rail.

When the switch-rails are provided with means to facilitate their adjustment and to hold them firmly in position as illustrated, I so combine the mechanism with the chairs or supports for the main line rails or with the main line rails themselves as to prevent the improper relative position of the parts, that is to say, the rockers or other devices and parts connected therewith must be in proper relative positions to the main line rails. On the inside of the gauge of the main line I sometimes employ a guard-rail as shown at *g*, which may be secured in position or to or with the main line rail *a* by chairs and wedges or bolts or otherwise; this guard-rail *g* will direct the wheels so as to ensure that wheels of the narrowest tread will engage with the switch-rail *d* on the outside of the main line *a*; it will also allow of a greater recess in the main line on the opposite side of the track, therefore admitting the use of a tapered switch-rail *c* of greater width and strength. In constructing crossing lines where two sets of switches are placed adjacent to each other, instead of placing them so nearly opposite as there described and shown, I place one set of switches back or beyond the other, so as to allow for forming the necessary recesses in the main line rails as shown in plan in figure 12, on sheet 2, and I provide guard-rails as hereinbefore described, or I use a shorter tapered switch-rail in combination with a guard-rail. When a set of such switches is adjusted to complete the crossing line, they are so connected or combined with the other switch-rails that it is impossible for the switch-man to adjust the last-named switch-rails or parts connected or interlocked therewith until the first-named switches and connections thereof shall have been adjusted to their normal positions.

One method of securing this result is shown in figure 12, that is to say, lever No. 1 is connected with one set of switches, and lever No. 2 is connected with the other set, the levers 3 and 4 or a greater number of levers being used to operate the signals. The levers Nos. 1 and 2 are combined with each other by means of a sliding bar or bars or other movable mechanism, the said bars or other mechanism being so arranged that when one of the levers which operates one set of switches is moved from its normal position of "main line clear," some extension or part of the movable mechanism offers obstruction to some other part or connection of the other set of switches, and also the connections or extensions of the signals, so that the latter must be in a position to indicate danger when it is possible to move the switch-rails.

When

When the first-named set of switches have been returned to their normal position of "main line clear" the other set of switches may be moved, and any movement of the latter necessitates the retention of the first-named switches in their normal position. In constructing the shifting pieces which afford the crossing of an immovable rail as described in the specification of my aforesaid patent, I provide such shifting pieces with a projecting lip.

On sheet 3, figure 13 is a plan of a crossing with such shifting piece, and figure 14 is a side view of the same. Figures 15, 16, 17, 18, and 19 are transverse sections of the said crossing on the lines $y\ y$, $y^1\ y^1$, $y^2\ y^2$, $y^3\ y^3$, $y^4\ y^4$. Figures 20 and 21 are transverse sections similar to figure 15, showing modifications in the construction of the said crossing hereinafter described.

In these figures, *a* represents the main line rail, and *b* the side line rail; *k* is the shifting piece, and *l* are the chairs for securing the parts in their proper position.

It will be seen by reference to figures 15 and 16 that the said shifting piece *k* is provided with the downward lip or extension k^1 which extends below the surface of the main line rail *a*, when the said piece is adjusted to complete the crossing line. The said lip k^1 rests upon the filling piece or supporting plate *m*.

The said supporting plate *m* is arranged at such a lower position, or so formed that the lip k^1 of the shifting piece *k* rests thereon when it is in position to complete the crossing line.

I thus obviate the wear of the supporting plate by the passing vehicles, and I also provide means for lowering this supporting plate by means of wedging or packing, so that as the main line wears away, the said plate may be lowered so as not to be worn thereby, always securing a uniform support for the shifting piece. One means of varying the height of the supporting plate *m* consists of a series of plates m^1 as shown, or plates of varying thickness may be employed, or inclined plates may be used, the same being held in position by clamps, screws, recesses, or otherwise as may be desired.

The shifting piece *k* may be raised and lowered in a similar manner. Figures 15 and 18 show a series of plates, l^1, which provide the means for varying the height of the said shifting piece as may be necessary or as the main line rail wears.

The shifting piece *k* provided with the aforesaid lip k^1 is raised and lowered in its adjustment by means of rockers, rollers, inclined or cam surfaces, or any combination of the same.

One means for facilitating the adjustment of the said shifting piece is shown in figures 13, 14, and 17, in which I arrange upon the connecting rod *n* a sleeve, *o*, provided with inclines, o^1, which are arranged to run upon a roller, p^1, as the said rod *n* is moved to and fro, thereby raising and lowering the shifting piece. The roller p^1 is carried in a bracket, *p*, which is secured in its proper relative position to the main line rail *a*. The pin *q* is secured to the connecting rod *n*, and also to the shifting piece, and by means of washers q^1 the height of the said shifting piece may be varied as desired.

In order to construct such shifting pieces economically, with facility and of uniform shape I cast them of steel, or of metal of the necessary strength and tenacity, or form them in dies or moulds.

In order to provide means to allow of the ready adjustment by passing vehicles, the shifting pieces or any combination of them in the improved construction of crossing lines, either at the switches or crossings or both, even when such movable parts are combined in a system by interlocking mechanism, I arrange the same as shown in figure 22, sheet 4, which is a plan showing the shifting piece at a crossing in combination with a switch provided with an arrangement of mechanism for combining such shifting piece or pieces and signalling devices that when the shifting piece or pieces at the crossings or switches or both are adjusted to the crossing line, they are not locked or held so as to cause a breakage of the connecting rods by the passage of vehicles on the main line, but the signalling devices are so connected, combined, or interlocked with the connections or parts of the crossing line, that until such shifting pieces are fully adjusted to safety or "main line clear," it is impossible to withdraw or complete the movement of the signal from its danger position, and in giving signal for "line clear," it is no longer possible to move the shifting parts of the crossing line away from "safety for the main line." The bolt for holding the lever when the shifting pieces are so adjusted to complete the crossing line may be one that is readily broken or caused to yield so as to release the lever, or the lever connected to the shifting pieces of the crossing line need not be bolted in either position when the shifting pieces are retained in position by a weight or are fitted with the improvements to facilitate adjustment.

Figure 23 is a plan of part of the said mechanism drawn to an enlarged scale, and figure 24 is a side elevation of the same.

In figures 22 to 24 I have shown one method of accomplishing the above-mentioned results. Lever No. 1 is connected with the shifting piece at the crossings and the switches (or with a single crossing and switch) or any combination of shifting pieces at crossings and switches, as may be desired, and is combined with the levers Nos. 2 and 3 in such a manner that until or only when the signals shall indicate danger it is impossible to commence the movement of the switches or shifting pieces at the crossings, and any movement or commenced movement of the parts of the crossing line or connections thereof will cause the levers Nos. 2 and 3 and connections thereof to be retained until lever No. 1 and the connections thereof shall have been adjusted to their normal position of "main line clear." But in case of the adjustment of the shifting parts at the crossings and switches so as to complete the crossing line, the wheels of vehicles passing upon the main line will adjust the shifting piece *k* and its connections to their normal position of "main line clear," lever No. 1 being provided with a weight to hold the parts in position. By connecting such movable mechanism with levers or guards so placed as to be operated upon by vehicles passing over the crossing line the latter may be automatically completed.

In constructing through crossings, instead of using the shifting pieces *k*, situated on the inside of the line *a*, I employ a shifting piece k^1 on the outside, as shown in plan in figure 25, sheet 2, and arrange the tapered rail on the inside in combination with a stationary guard-rail, *h*.

This invention further relates to improvements in the construction of supports or posts for railway signals, telegraph lines, and for other purposes, and has for its object the production of such supports in metal, such as malleable iron or steel of a light weight, combined with the necessary stiffness and at a cheap cost.

Under one construction of the said posts, according to this invention, each of such posts consists of a tube or bar, which may be central or otherwise, according to the structure of the post, and of two, three, or more exterior tubes or bars which collectively constitute a framework preferably tapering from the

the base or lower part to the summit. These several tubes or bars are connected at intervals (say) of 5, 10, or other numbers of feet (these intervals or distances varying with the length or height of the posts) by horizontal platforms, plates, or framings composed of metal of angular or other suitable section or of tubes.

In some cases the post is composed of two or more tubes or bars united at intervals in the manner hereinbefore described, or by forming projections and recesses in, at, or near the edges of the bars or plates. The projections being forced into the recesses by compression, the edges of the plates become firmly attached to each other, or a single plate may have its edges so formed and united; and such method of uniting or combining plates or pieces of metal may be applied to posts, girders, frames, or other supports which are applicable to different structures. The projections and recesses on or in the plates are formed by means of suitably formed dies, rolls, or punching devices, so that the recesses will admit of the corresponding projections, the parts being compressed together by V-shaped rolls or other suitable devices. The projections or extensions or notches in or near the edges of the plates or bars are formed by passing the plates between rolls or surfaces which have projections that bend, form, or cut the metal plates so as to give the corresponding shape or form to the metal. When I wish to form the projections on the plates at an angle to the perpendicular line of the post, the metal plates pass through the rolls at an angle to the axis of the same. When I divide a plate into two or more pieces so as to avoid waste of metal, the alternate projections and recesses on and in the rolls break joint or dove-tail with each other.

Under another construction the central member of the post may be a tube or bar of simple or compound structure, and this is firmly maintained in its position by the tension of two, three, or more exterior wires, ropes, ribands, bars, rods, or tubes acting as ties, the whole being connected as described.

This series of bars, plates, or devices for holding an upright bar or tube, and the supports combined therewith, or a series of such upright or inclined tubes, bars, or supports, are or may be connected by means of wedging, screwing, or clamping devices, or the whole or parts thereof are arranged in their relative positions, and are then secured together by compression or running in molten metal, or the plates, framings, or parts for connecting the plates or bars may be castings formed on the bars or tubes.

When I employ molten metal to unite the parts, I provide such recesses or apertures for receiving the same as will ensure that the metal in contracting shall bind the parts firmly together, or the metal surrounding or forming the recesses may be readily compressed so as to bind the parts together.

These structures are provided with extensions to hold them firmly together in the ground, or they may be secured to or in a separate socket or support provided for them.

These structures may be arranged in sections or lengths so as to be more readily handled and secured together by bolts, rods, bands, or ties, or molten metal as may be desirable, or the sections may be so arranged as to engage or overlap the one with or over the other.

In figures 1 to 7 I have illustrated one form of my improved post or support as employed for a railway signal. The references hereafter, it is to be understood, are to sheets 5, 6, 7, and 8 of the drawings.

Figure 1 is a side elevation of this form of signal post, and figures 2, 3, 4, 5, 6, and 7 are horizontal sections drawn to an enlarged scale of the same, above the several platforms or plates hereinafter referred to.

In these figures, a represents the post, which consists of the rods, tubes or uprights a^1, and a central rod or tube, a^2, passing through plates or platforms, b, and which collectively form a framework, preferably tapering from the base or lower part to the summit. These several tubes or uprights are connected together at intervals (these intervals or distances varying with the length or height and the desired strength of the post), by the said plates b, composed of metal of angular or other suitable construction. It will be seen by reference to figures 2 to 7, that by placing the rods, tubes, or bars a^1 in the aerptures b^1 of the said plates, the desired taper, incline, or form is secured for the post or support. The said post is secured in position by providing an extension composed of a series of tubes, rods, bars, or plates, a^4, which constitute the base a^* of the said post or support, which base is firmly embedded in the ground or otherwise secured in position for the attachment of the said post. These rods or bars a^4 and the plates b^2 constitute the base a^* as shown in figure 1, and are arranged similarly to those which constitute the stem of the post. The lower plate b of the stem of the post, and the upper plate b^2 of the base are secured together by forming a socket upon the said plate b^2 adapted to receive the plate b, which, when inserted in the said socket, is secured in position by nuts, bolts, rivets, or otherwise. The socket may be formed on the stem instead of on the base when desired, and the socket may be of greater depth than shown. c represents the signal-arm provided with the weighted lever d, and connecting rod e; f is the lamp, which is raised or lowered by sliding upon the rod or plate a^3, through the medium of the connection g. Figure 8 shows in elevation another form of my improved post or support, which has a greater number of tubes, rods, or bars, or a greater amount of metal at or towards the base than at the summit of the same, thereby ensuring greater strength and rigidity to the said post, the arrangement of the bars a^1 and plates b being similar to those described with reference to figures 1 to 7. The base a^* for supporting the post is composed of the bars, tubes, or rods a^4, without the lower plate b^2, shown in figure 1. These bars or rods a^4 are secured to the upper plate b^2 and may be driven collectively into the ground, so as to form a secure base to which to attach the post, or the said bars a^4 may be driven separately through the upper plate b^2, and thus form the base for the stem of the post, or the bars a^4 may be driven through the plate b, or the plates b and b^2, into the ground so as to clamp or hold the stem firmly in position, and the said bars a^4 may be driven vertically or in an inclined direction so as to increase or afford a firm base for the said post. I have shown in figure 8, and in plan and transverse section in figures 9 and 10 a simple device for securing the plate b and upper plate b^2 together. This device consists of a clip, b^4, provided with extensions through which cotters, b^5, are passed for the purpose above described.

Figure 11 is an elevation of another form of my improved post, which is formed in sections, the said sections being similar in construction to that described with reference to figure 1. These sections may be secured together by means of rivets or bolts as shown, or one section may be made to fit into or over another, or they may be otherwise secured to each other. This figure also shows a modified form of the base for supporting the stem of the post.

Figure 12 is a vertical section of another form of base, in which the tubes connecting the plates b^2 are of sufficient size to admit tubes or plugs which form a part of or extend into or surround the upright rods, bars, or tubes, a^1, of the stem of the post.

Figures

Figures 13, 14, 15, 16, 17, 18, 19, 20, 21, and 22 are horizontal sections of posts which are constructed of four rods, tubes, or bars.

Figure 23 is a vertical section on the line $y^* y^*$, figure 22.

Figures 24, 25, 26, 27, and 28 are horizontal sections of posts which are constructed of three rods, tubes, or bars.

Figures 29, 30, 31, and 32 are horizontal sections of posts in the construction of which a greater number of tubes, rods, or bars are employed in combination with the plates or platforms *b*.

Figure 33 is a horizontal section of a post showing the arrangement of two plates or bars in combination with the aforesaid plates *b*.

Figures 34, 35, and 36 illustrate one method of fastening the rods a^1 to the plates *b* by molten metal.

Figure 34 is a horizontal section; and figure 35 is a vertical section of a portion of the said plate, and one of the rods before the molten metal is poured in; and figure 36 is a vertical section of the same, after such molten metal has been poured in.

It will be seen by reference to these figures that the hole b^1 in the plate *b* through which the rod a^1 passes is slightly larger than the said rod, and that a series of grooves or recesses b^* are formed around said opening into which the metal flows, these recesses being of such a form as to ensure the metal in contracting during cooling wedging itself tightly against the walls of such recesses and the rod, tube, or plate passing through the said plate, or by securing the upright in such a position as to allow the metal to pass around the same, and extend beyond the upper and lower surfaces of the aperture in the plate *b*; the metal in cooling will bind the parts firmly together.

In figures 22, 23, and 37 I have shown another method of securing the upright rods, tubes, or bars in place in the plate *b*, by compressing the metal surrounding the orifice in which the said rod, tube, or bar is placed against the said rods, tubes, or bars so as to bind the same firmly together. The plate *b* and bars a^1 may in some cases be bound together by compressing the metal surrounding the orifice so as to reduce the aperture sufficiently to retain the upright bar without forming a projecting lip as shown in the abovenamed figures.

Figures 38 and 39 are horizontal sections showing the plate *b* formed in two parts, the inner part being provided with recesses in which the upright rods, tubes, or bars are placed, the outer part serving to wedge, hold, and unite the parts together.

Figure 40 is a side elevation, and figures 41 and 42 are horizontal sections of the same, on the lines $y\ y\ y^1\ y^1$. Figure 40 showing another form of my improved posts or supports for signals or otherwise. It will be seen by reference to these figures that I employ a series of bars, a^1, which are ribbed and have openings formed in them at intervals, as shown in figure 40, for the purpose of ensuring strength and lessening the surface exposed to the wind. These plates or bars a^1 are placed in recesses or apertures in the plates *b*, and are secured firmly in position as above described.

Figures 43, 44, 45, 46, 47, 48, 49, 50, and 51 are horizontal sectional views of posts illustrating various arrangements of the bars or plates a^1, which are ribbed and provided with apertures or openings as described in connection with figures 40 to 42 of the drawings. It will be seen that these bars or plates a^1 are so arranged that the ribs or edges of the different plates are so located as to be in a line or nearly so at an angle to the width of the plates in different directions across the post, thereby ensuring great additional strength, with a minimum amount of metal.

Figure 52 is a horizontal sectional view showing another form of my improved posts or supports, and figure 53 is a side elevation of a portion of the said post detached. In this arrangement I employ an angular ribbed plate, which is provided with apertures as aboved described.

Figure 54 is a side elevation of another form of post or support constructed according to my invention. Figure 55 is a side elevation of one of the plates employed in constructing this form of post detached.

Figure 56 is a horizontal section of the same, drawn to an enlarged scale.

In these figures the post is constructed of bars or plates, *i*, which are provided with alternate recesses and projections, $i^1\ i^2$, in, at, or near their edges, and the projections i^2 being forced into the recesses i^1 by compression the edges of the plates become firmly attached to each other, or a single plate may have its edges so formed and united; and such method of uniting or combining plates or pieces of metal may be applied to posts, girders, frames, or other supports which are applicable to different structures. The projections and recesses on or in the plates are formed by means of suitably formed dies, rolls, or punching devices, so that the recesses will admit the corresponding projections, the parts being compressed together by V-shaped or other suitable rolls or devices.

Figure 57 is a side elevation of a post in which the plates *i* are provided with apertures or openings, i^3, and which may also be provided with ribs, as and for the purpose above described. It will be seen by reference to this figure that the projections on each plate are not opposite each other as shown in figure 55, each projection in this case being opposite a corresponding recess in the said plate.

Figure 58 is a side elevation showing the projection i^2 on the plates *i* semi-circular in form, although any form of projection may be employed as desired, even for ornamentation.

Figures 59 and 60 are horizontal sectional views of modified forms of the post above described, showing the side plates curved; the said plates may be provided with apertures as shown in figure 57, and may also be provided with ribs if desired.

Figures 61, 62, 63, and 64 are horizontal sectional views of other forms of my improved posts or supports. In these figures *j j* represent the plates or bars of which the post is formed, and *k* represents an angular or curved plate which overlaps the projections $j^1\ j^1$ of the plates *j*, these overlapping projections being compressed or forced over the said projections as shown by means of suitably formed rolls, so as to bind and hold the parts securely together.

In figures 65 to 70 I have shown another form of my improved signal post, in which figure 65 is an elevation of this form of my improved post.

Figure 66 is a side view, and figure 67 an underside view of one of the plates or platforms to be used in the construction of the same.

Figure 68 is a vertical section of the said plate or platform on the line *z z*, figure 67, showing the method of securing the same upon the tubes or rods of the said post.

Figure

Figure 69 is a plan of a plate or platform employed at or near the ends of the tubes or rods or the sections of the said post where they are united.

Figure 70 is a vertical section of the said platform on the line z^1 z^1, figure 69, and parts in conjunction therewith, as hereinafter described.

Figures 66 to 70 are drawn to an enlarged scale.

In these figures, l represents the post, which is constructed of a series of rods or tubes, l^1 l^2 l^3 l^4, of varying diameter or sizes.

By such construction great strength and rigidity are ensured, as a greater amount of metal is provided at and towards the base of the post than at or towards its summit; m n are the plates or platforms for securing the said rods or tubes in their relative positions with regard to each other.

These plates or platforms are provided with elongations extending in the direction of the tubes, thereby ensuring a more efficient brace for the structure.

These said plates or platforms may be provided with ribs to impart great strength to the same with a minimum amount of metal, and are preferably cast or moulded with the necessary apertures or recesses in them and of the desired form. In order to secure the plate m at the parts of the rods or tubes where a coupling is not employed, I use a ring, bush, or collar, m^1, in combination with the said platform. This ring, bush, or collar serves to fill the aperture m^* in the platform m, through which the tube or rod passes, and secures the said platform and tube or bar firmly together, the said ring m^1 being provided with wedging or inclined surfaces which cause the said ring when the nut m^2 is turned to gradually and securely bind the parts together. It will be understood by reference to figure 68, that the ring, bush, or collar m^1, by being cut or divided in the direction of its length can be readily passed over the tube or bar into position, and when screwed or clamped within the aperture m^* of the platform m, will firmly grip or hold the said tube and platform together.

In order to secure the platform n at or near the ends of the rods or tubes, or the sections of the said post where a coupling n^1 is employed, the said platform is so formed as to pass over, encircle, or partly surround the coupling, and by means of a screw-nut n^2, the platform n is forced and held firmly in connection with the coupling.

It will be understood by reference to the drawing that the pipes, tubes, or rods at their ends are connected with the coupling n^1, and the coupling being secured to the platform n, all of the parts are thereby firmly secured together. In order to facilitate the connection or disconnection of the sections or tubes or rods, I provide a sufficient length of screw-thread upon one of the meeting tubes or rods to allow the coupling n^1 to be screwed back upon such thread so as to release the other meeting tube or bar, as shown on an enlarged scale in vertical section in figure 71, and by forming the coupling with an internal diameter corresponding with the external diameter of the unthreaded portions of the tubes or rods at the parts of the said coupling which extend over or beyond the screw-threaded portions of the said tubes or rods, I obviate the weakening of the pipes or rods at or near the ends of the coupling.

Figure 72 illustrates another means of securing the platform m to the rods or tubes, that is to say, the said platform is provided with an inclined or taper extension m^3, which is divided or split, and provided with a screw-thread upon its outer surface with which a nut m^4 engages and which effects the clamping or securing of the said platform firmly in position; or instead of a screw-thread being cut upon the outer surface of the said extension, it may be formed upon the inner surface adjacent to the tube or rod, and a tapered split ring, bush, or collar screwed into the same, or a split ring, bush, or collar may be passed through the aperture m^* in the platform, and be provided with a screw-nut above and below the said platform.

Figures 73 and 74 are elevations of telegraph posts consisting of a series of rods or tubes and platforms connected together as above described. It will be seen by reference to these figures, that each of the said posts is constructed of a central tube o, consisting of a series of connected tubes of varying diameters, or of a single tube of the same diameter throughout, and a series of smaller tubes, bars, or plates, o^1. Figure 75 shows a post in which the rods o and o^1 are of the same diameter.

Figure 76 is a horizontal section of a post showing a sectional platform. When the rods, tubes, or bars are placed in the recess p^* in one part p of the said platform, the other part p^1 of the same is clamped, so as to force the tubes or bars firmly into the said recesses by means of screws p^2 or otherwise.

It will be understood by reference to the drawings, that the parts or sections can be arranged and combined with facility and precision, so as to constitute posts at the various places at which they are to be erected, and that the sections or parts of the said post may be readily disconnected when desired, without destroying or injuring any of the parts of the same, even when painted or galvanized.

It will be understood that, in posts or supports which are maintained in their upright position mainly or entirely by their base fastenings or anchorages, such as posts for railway signals, telegraph wires, or similar supports, it is an important feature to so construct such posts or supports as to offer the least possible resistance to the wind, and also to so form or arrange the parts constituting the post as to ensure lightness with the necessary strength.

These important advantages are secured by such construction, arrangement, or combination as is described and illustrated in the accompanying drawings.

Claims :—

First—The arrangement of the switch-rails in combination with the recessed main line rail or rails, or main line rail of reduced width, substantially in the manner and for the purposes specified.

Second—Combining with the improved construction of switches or shifting pieces at crossing, rockers, rollers, or similar devices for raising and lowering or adjusting and holding the movable parts of the switch or connections thereof, substantially in the manner and for the purposes set forth.

Third—The shifting piece at the crossing, constructed with a projection or lip, in combination with a supporting plate or piece at the side of the main line rail, for the purpose specified.

Fourth—The devices or means for raising and lowering the aforesaid shifting piece to or from the supporting plate, as and for the purpose specified.

Fifth—

Fifth—Providing means in combination with a shifting piece which affords the crossing of a permanent main line rail, for varying the height of the supporting plate or filling piece, or of the shifting piece, so as to provide for the wear of the main line rail, for the purposes specified.

Sixth—The improved construction or arrangement of a pair of switches in combination with undivided main line rails, substantially in the manner and for the purposes specified.

Seventh—Such an arrangement of sliding bars or engaging faces which afford the means for securing the proper relative working of crossing lines and signals, that when the crossing line is completed, the shifting piece or switches of such crossing line can be adjusted by vehicles passing upon main lines without breakage or without serious breakage, as above described.

Eighth—In the construction of posts or supports for railway signals, telegraph lines, and for similar purposes, the employment of a series of rods, tubes, bars, or plates in combination with the platforms or plates *b*, as above described with reference to figures 1 to 7 of the accompanying drawings.

Ninth—In the construction of posts or supports for railway signals and other purposes, the combination of a series of rods, tubes, plates, or bars with the platforms or plates *b*, as described with reference to figures 8 to 53 of the drawings, or any modification of the same.

Tenth—The method of securing the rods, plates, or bars a^1, in or to the platforms or plates *b*, substantially as above set forth, and for the purposes specified.

Eleventh—The construction and means for securing a firm base for the posts or supports as described and shown in the drawings.

Twelfth—The employment in the construction of posts or supports for railway or other purposes of a series of plates, provided with projections and recesses on their edges, the said projections being compressed or forced by means of rollers or otherwise, so as to bind the parts together, substantially as described with reference to figures 54 to 60 of the accompanying drawings.

Thirteenth—The method of constructing and joining the edges of plates which constitute a post or support for railway signal or other purposes, substantially as described with reference to figures 61 to 64 of the drawings.

Fourteenth—In forming posts or supports for railway signals, telegraph wires, or similar purposes, the construction of a plate or series of plates provided with apertures, or the arrangement or combination of bars or plates so as to provide apertures and ensure strength, substantially as described with reference to the accompanying drawings.

Fifteenth—In the construction of posts or supports for railway signals, telegraph lines, and for similar purposes, the construction or arrangement and combination of a series of upright tubes, rods, bars, or plates, in such a manner that a greater amount of metal is provided at and towards the base than at and towards the summit, substantially as above described, and for the purposes specified.

Sixteenth—The construction of the parts or sections for forming posts or supports for railway signals, telegraph lines, and similar purposes, in order that the said parts or sections may be arranged and combined with facility and precision, so as to constitute posts at the places at which they are to be erected, substantially as herein described and for the purposes specified.

Seventeenth—The construction of the platforms or plates *m n*, as herein described with reference to the drawings, and for the purposes specified.

In witness whereof, I, the said Joseph Stokes Williams, have to this my specification set my hand and seal, this twenty-eighth day of October, one thousand eight hundred and seventy-nine.

JOSEPH STOKES WILLIAMS.

Signed and sealed by the said Joseph Stokes Williams, in the presence of—

ROBERT ADAM GUNN,
115, St. Vincent-street, Glasgow.

JAMES SMITH BEGG,
115, St. Vincent-street, Glasgow.

This is the specification, marked A, referred to in the annexed Letters of Registration granted to Joseph Stokes Williams, this fifteenth day of June, A.D. 1880.

AUGUSTUS LOFTUS.

REPORT.

Sir,

Sydney, 13 May, 1880.

We have the honor to report that we see no objection to the issue of Letters of Registration to Mr. Joseph Stokes Williams, for his invention of "Improvements in Railway Crossings and Switches, and the means or apparatus for signalling upon or operating mechanism connected with lines of railway, and in the construction of posts or supports for carrying signals, and for other purposes," in accordance with his Petition, specification, and claim, transmitted to us under your blank cover communication, No. 80-2,257, of the 17th March.

We have, &c.,
JOHN WHITTON.
WILLIAM C. BENNETT.

The Principal Under Secretary.

[Drawings—eight sheets.]

Fig. 1.

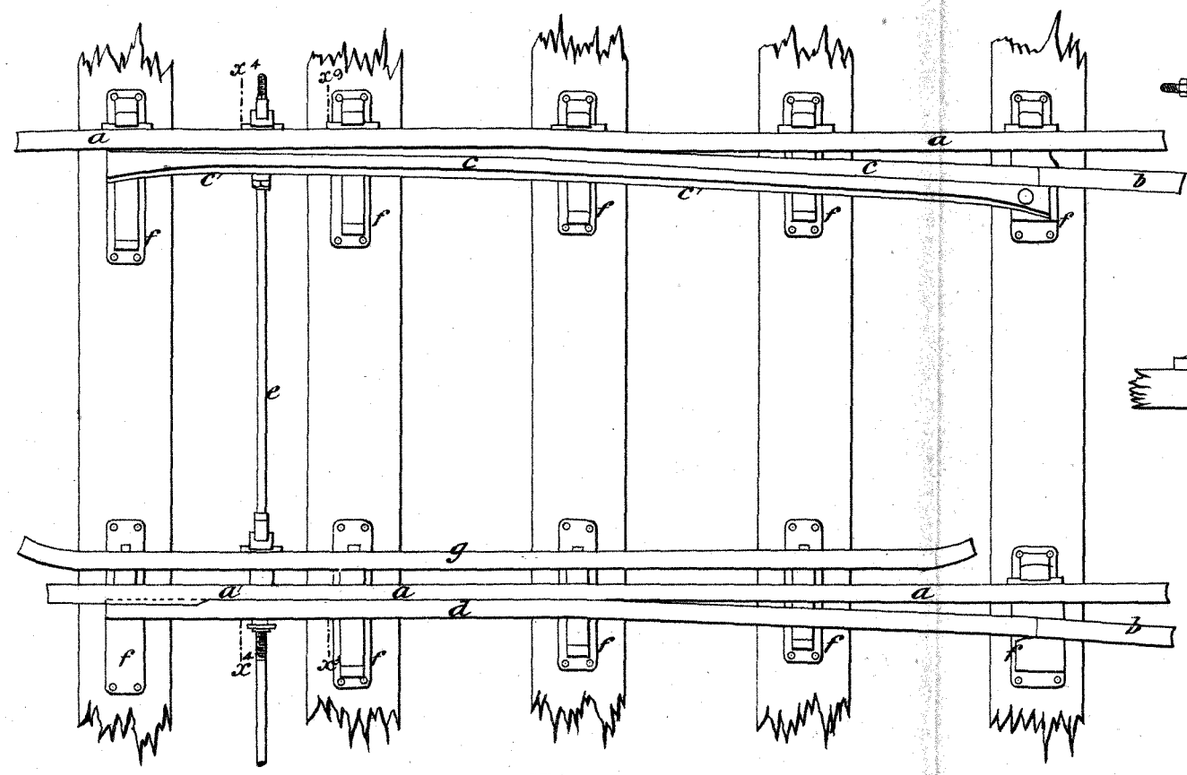

Fig. 2.

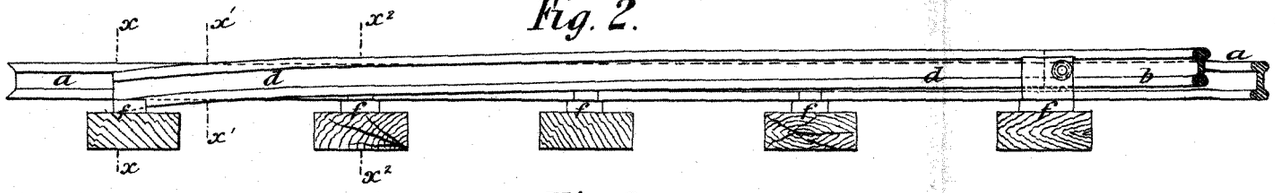

Fig. 3.

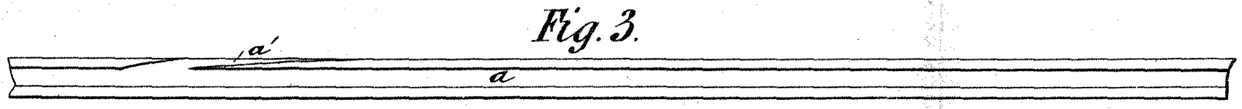

Fig. 11.

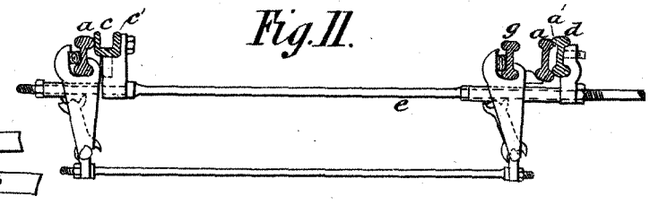

Fig. 10.

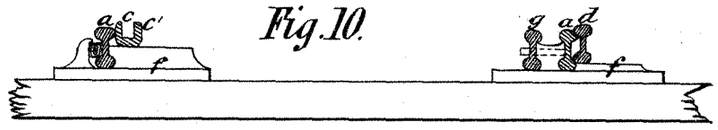

Fig. 4

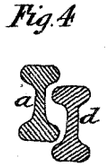

Fig. 5.



Fig. 6.



Fig. 8.



Fig. 7.



Fig. 9.

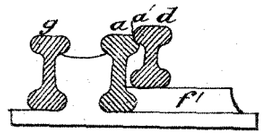

This is the Sheet of Drawings marked B. referred to in the annexed Letters of Registration granted to Joseph Stokes Williams, this fifteenth day of June A.D. 1880

Augustus Loftus.

(Sig: 357-)

PHOTO-LITHOGRAPHED AT THE GOVT. PRINTING OFFICE, SYDNEY, NEW SOUTH WALES.

C.

Sheet 2.

[839]

Fig 12.

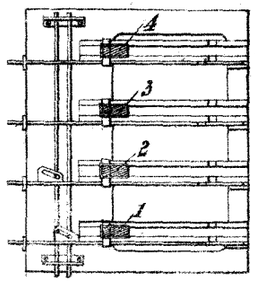

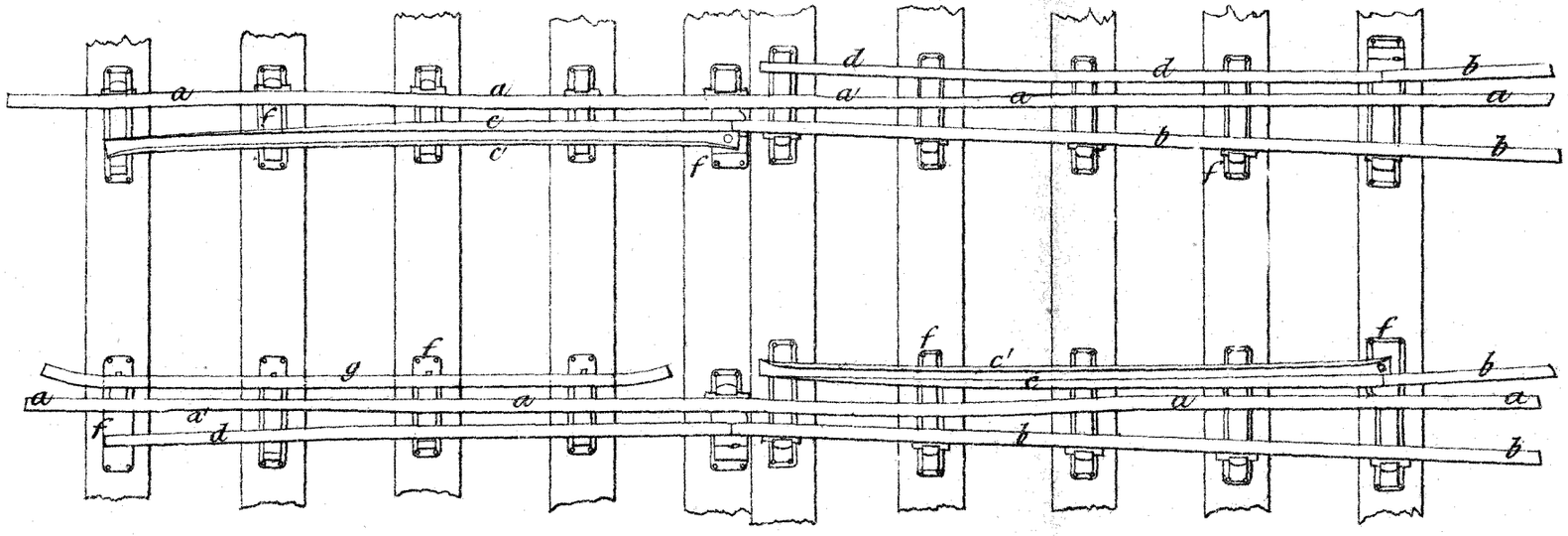

Fig 25.

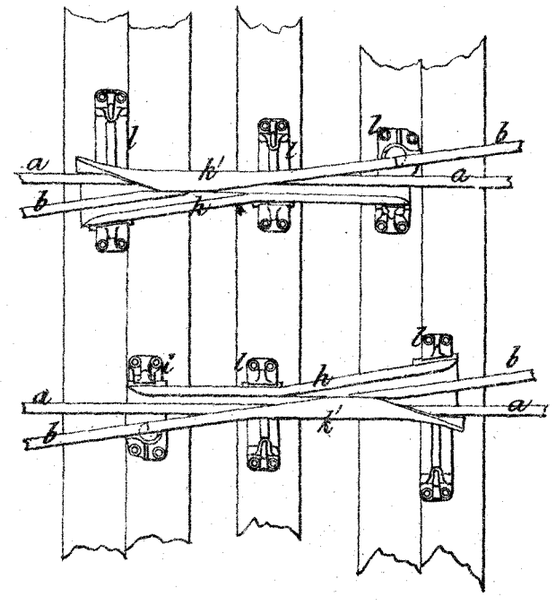

This is the Sheet of Drawings marked "C" referred to in the annexed Letters of Registration granted to Joseph Stokes Williams this fifteenth day of June A.D. 1880.

(Sig. 357.)

Augustus Loftus

PHOTO-LITHOGRAPHED AT THE GOVT. PRINTING OFFICE, SYDNEY, NEW SOUTH WALES.

D.

[839] Sheet 3

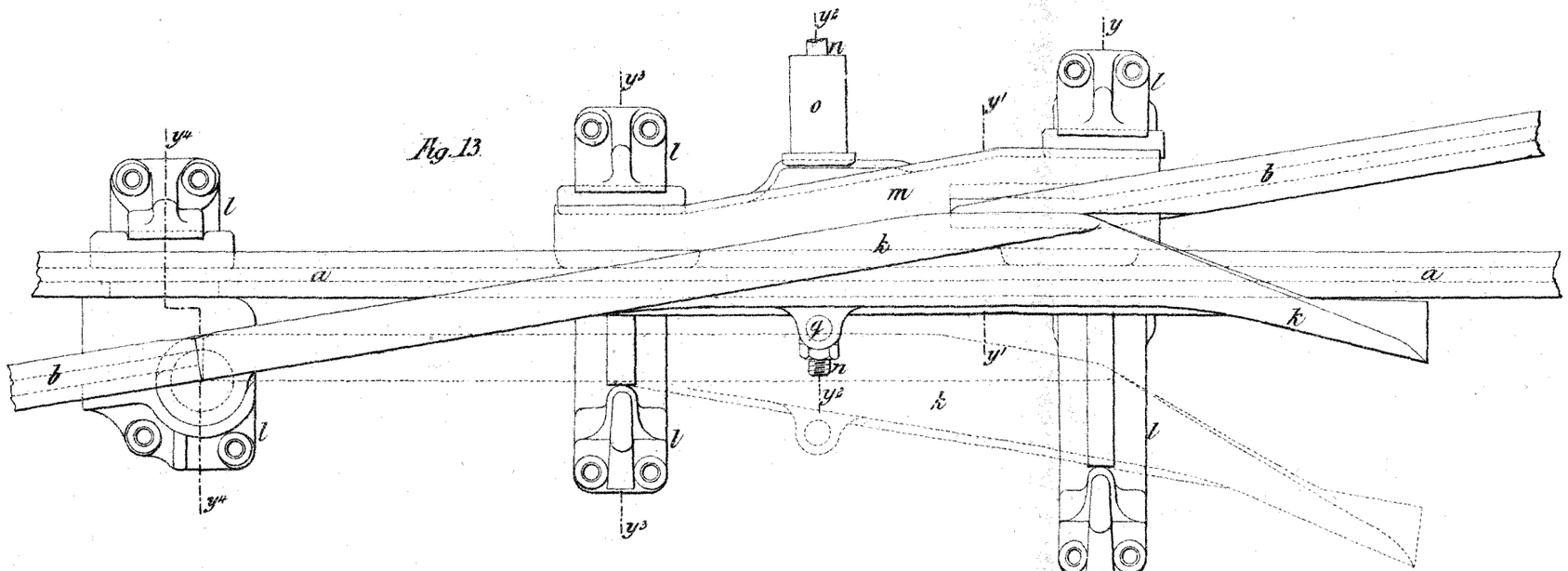

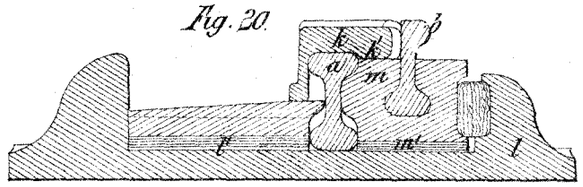

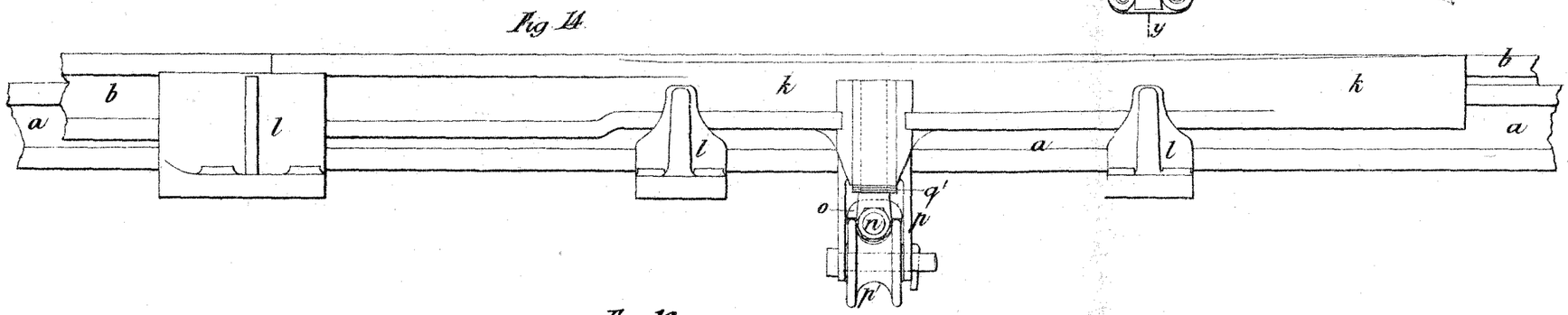

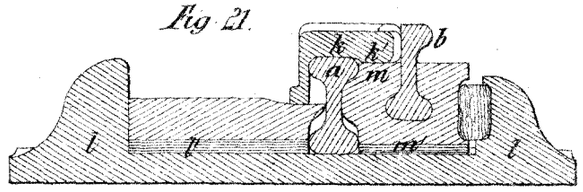

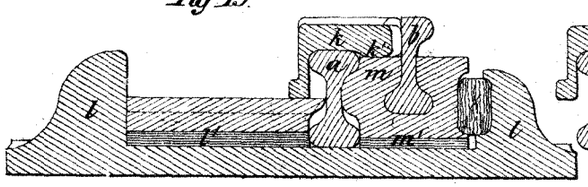

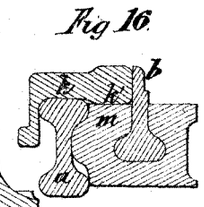

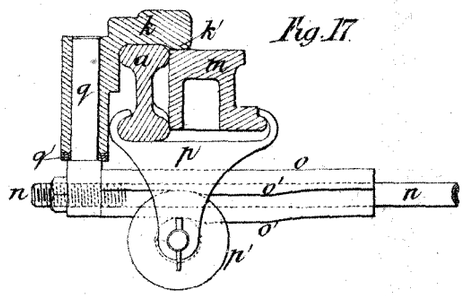

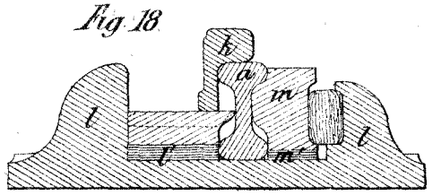

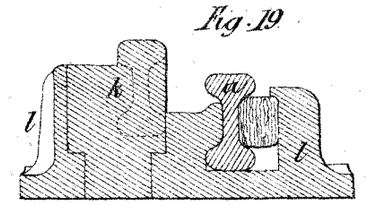

This is the Sheet of Drawings marked "D" referred to in the annexed Letters of Registration granted to Joseph Stokes Williams this fifteenth day of June AD 1880.

"Augustus Loftus"

(Sig: 357-)

PHOTO-LITHOGRAPHED AT THE GOVT. PRINTING OFFICE SYDNEY, NEW SOUTH WALES.

E

[839]

Sheet 4.

Fig 22.

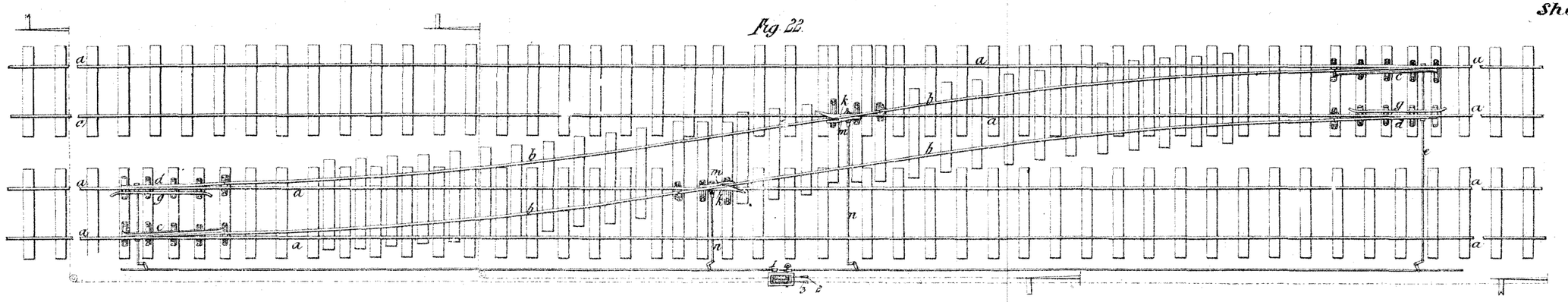

Fig 23

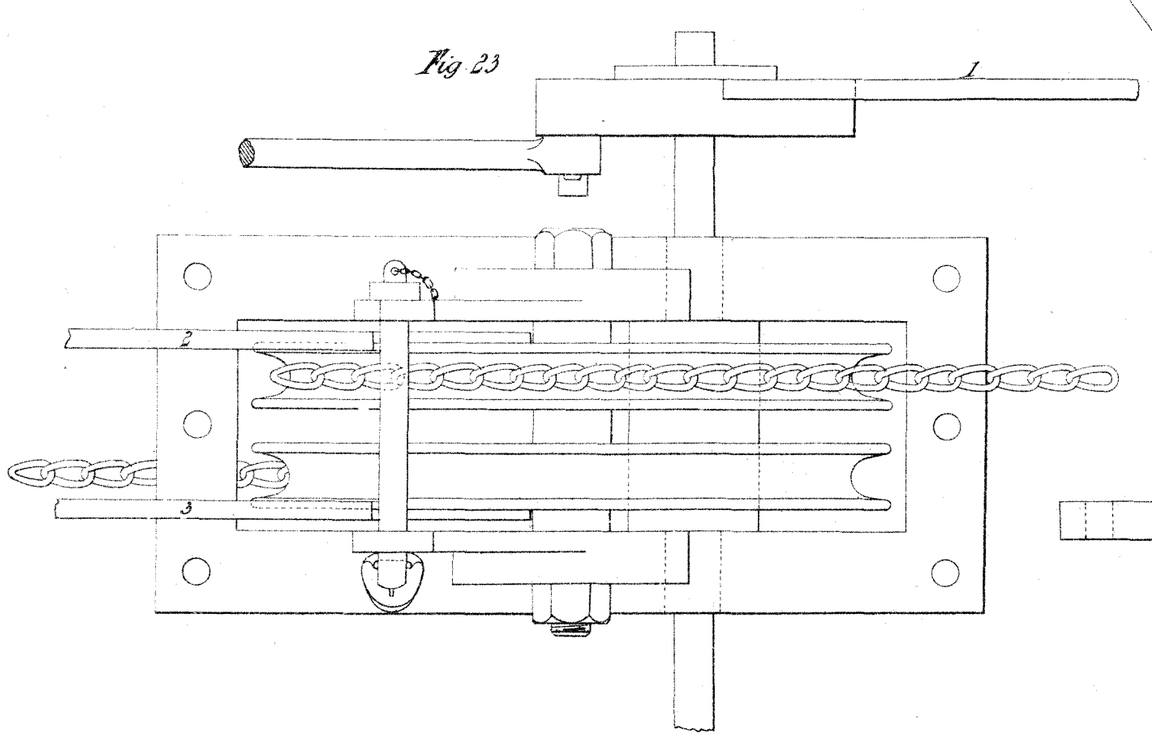

Fig 24.

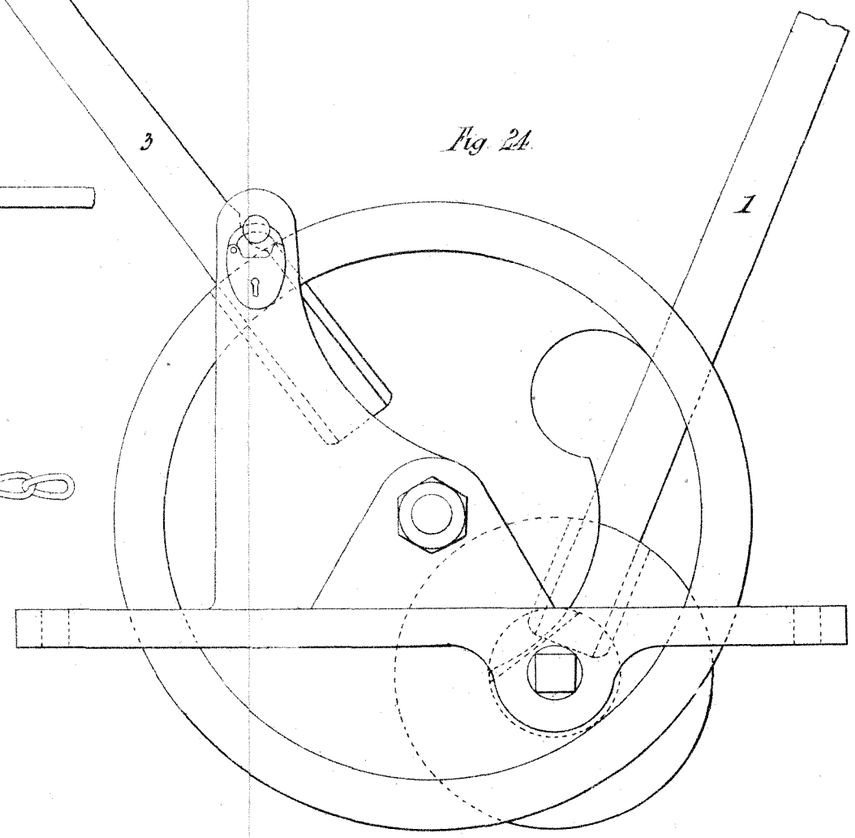

This is the sheet of Drawings marked "E" referred to in the annexed Letters of Registration granted to Joseph Stokes Williams this fifteenth day of June A.D. 1880.

(Sig: 357)

Augustus Loftus

PHOTO-LITHOGRAPHED AT THE GOVT. PRINTING OFFICE, SYDNEY, NEW SOUTH WALES.

F

[839]

Sheet 5.

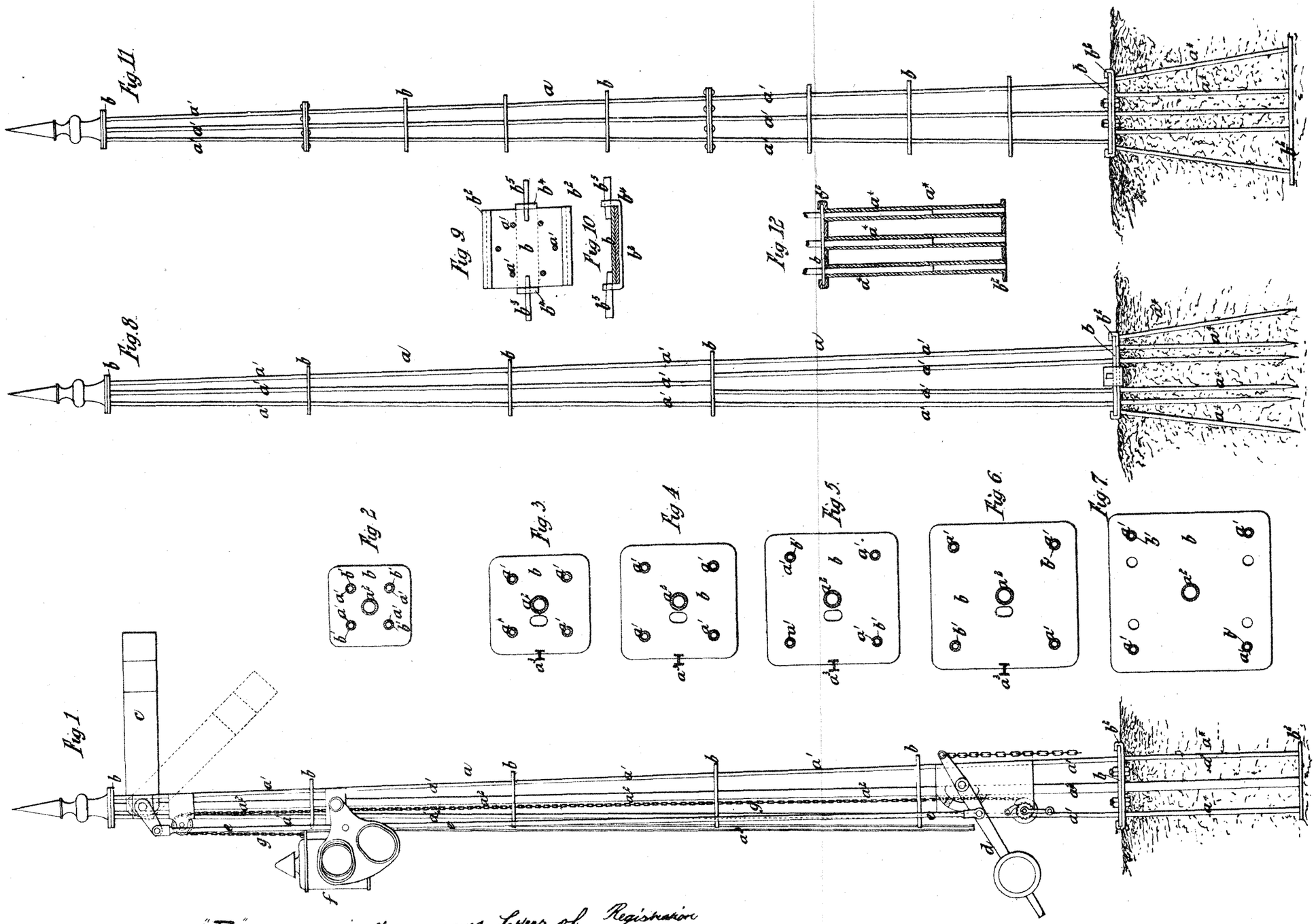

This is the Sheet of Drawings marked "F" referred to in the annexed Letters of Registration granted to Joseph Stokes Williams this Fifteenth day of June A.D. 1880.

Augustus Loftus.

(Sig: 357-)

PHOTO-LITHOGRAPHED AT THE GOVT. PRINTING OFFICE, SYDNEY, NEW SOUTH WALES.

G.

[839]

Sheet G

Fig. 13

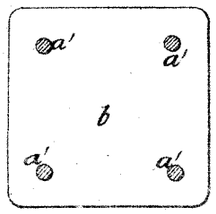

Fig. 14

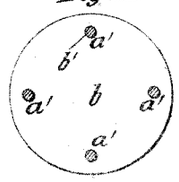

Fig. 15

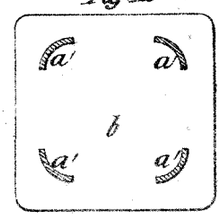

Fig. 16

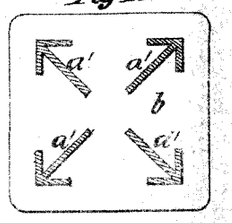

Fig. 17

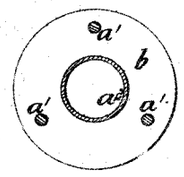

Fig. 18

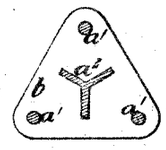

Fig. 19

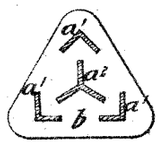

Fig. 20

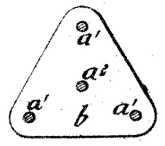

Fig. 21

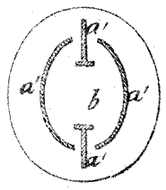

Fig. 22

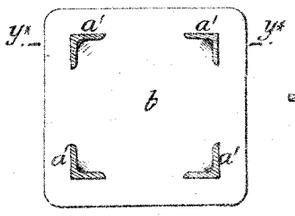

Fig. 23

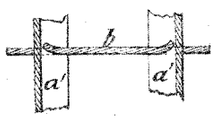

Fig. 24

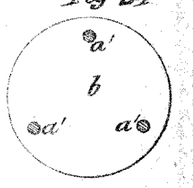

Fig. 25

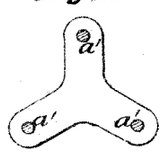

Fig. 26

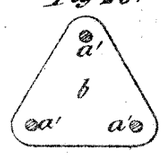

Fig. 27

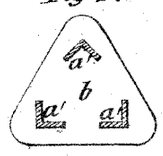

Fig. 28



Fig. 29

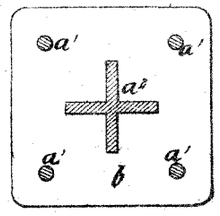

Fig. 30

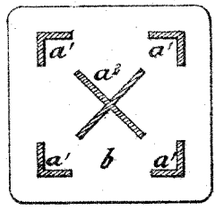

Fig. 31

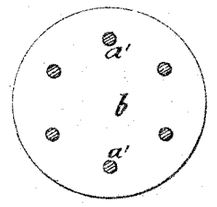

Fig. 32

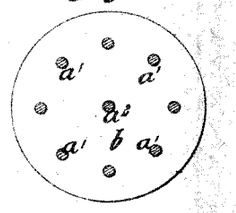

Fig. 33

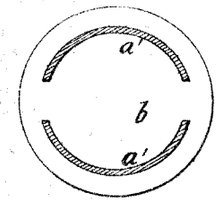

Fig. 34

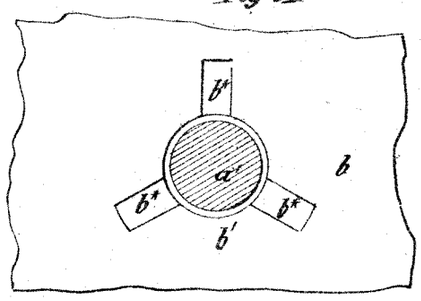

Fig. 35

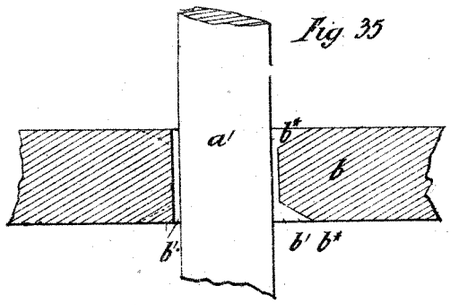

Fig. 36

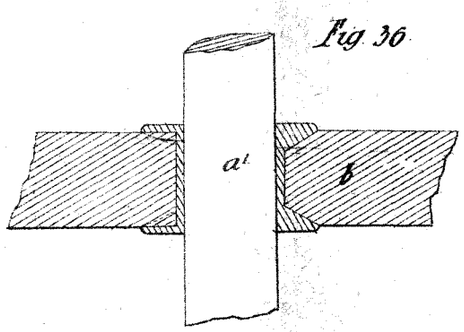

Fig. 37

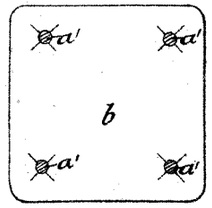

Fig. 38

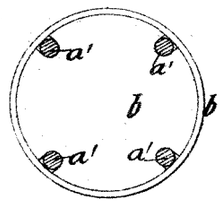

Fig. 39

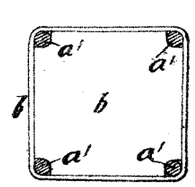

This is the Sheet of Drawings marked "G" referred to in the annexed Letters of Registration granted to Joseph Stokes Williams this fifteenth day of June — A.D. 1880.

(Sig: 357—) J. Augustus Loftus

PHOTO-LITHOGRAPHED AT THE GOVT. PRINTING OFFICE, SYDNEY, NEW SOUTH WALES.

H.

[839]

Sheet. 7.

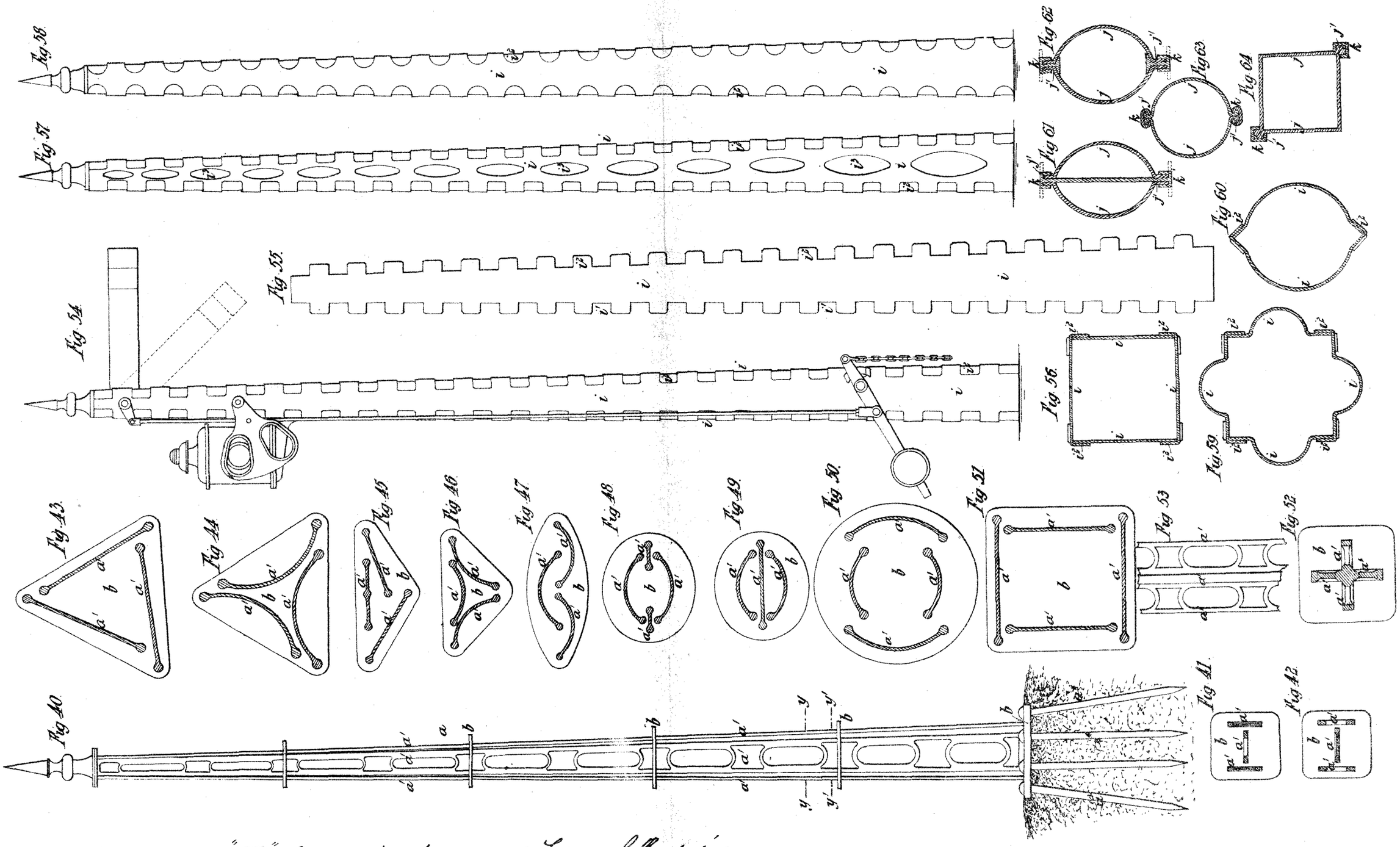

This is the Sheet of Drawings marked "H" referred to in the annexed Letters of Registration granted to Joseph Stokes Williams this fifteenth day of June A.D. 1880.

"Augustus Loftus"

(Sig: 357-)

PHOTO-LITHOGRAPHED AT THE GOVT. PRINTING OFFICE, SYDNEY, NEW SOUTH WALES.

I

[839] Sheet 8.

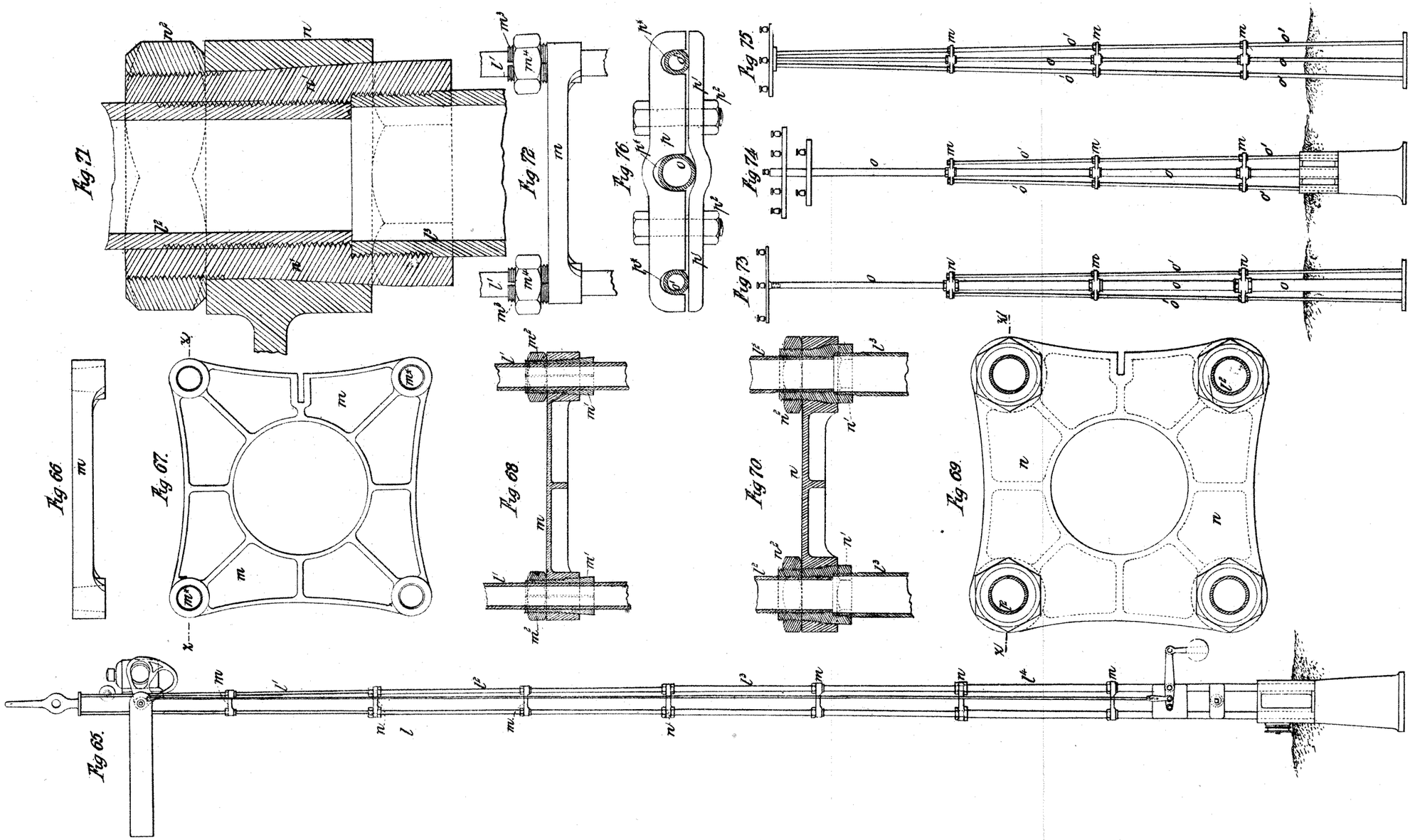

This is the Sheet of Drawings marked "Reserved" to in the annexed Letters of Registration granted to Joseph Stokes Williams this fifteenth day of June A.D. 1880.

"Augustus Loftus"

(Sig: 357-)

A.D. 1880, 16*th June*. No. 840.

HERBERT'S IMPROVED SCOOP OR EXCAVATOR.

LETTERS OF REGISTRATION to Thomas Herbert, for an improved Scoop or Excavator.

[Registered on the 18th day of June, 1880, in pursuance of the Act 16 Vic. No. 24.]

BY His Excellency the Right Honorable Sir Augustus William Frederick Spencer Loftus (commonly called Lord Augustus Loftus), Knight Grand Cross of the Most Honorable Order of the Bath, a Member of Her Majesty's Most Honorable Privy Council, Governor and Commander-in-Chief of the Colony of New South Wales and its Dependencies.

TO ALL TO WHOM THESE PRESENTS SHALL COME, greeting:

WHEREAS Thomas Herbert, of Moothumbil, Condobolin, in the Colony of New South Wales, hath by his Petition humbly represented to me that he is the author or designer of a certain invention or improvement in manufactures, that is to say, of an invention of an "Improved Scoop or Excavator, to be called Herbert's Improved Scoop or Excavator," which is more particularly described in the specification, marked A, and the two sheets of drawings, marked B and C respectively, which are hereunto annexed; and that he, the said Petitioner, hath deposited with the Honorable the Treasurer of the said Colony of New South Wales the sum of Twenty Pounds sterling, for defraying the expense of granting these Letters of Registration, as required by the Act of Council, sixteenth Victoria, number twenty-four; and hath humbly prayed that I would be pleased to grant Letters of Registration; whereby the exclusive enjoyment and advantage of the said invention or improvement might be secured to him for a period of fourteen years: And I, being willing to give encouragement to all inventions and improvements in the arts or manufactures which may be for the public good, and having received a report favourable to the prayer of the said Petition, from competent persons appointed by me to examine and consider the matters stated therein and to report thereon for my information, am pleased, with the advice of the Executive Council, and in exercise of the power and authority given to me by the said Act of Council, to grant, and do by these Letters of Registration grant unto the said Thomas Herbert, his executors, administrators, and assigns, the exclusive enjoyment and advantage of the said invention or improvement, for and during the term of fourteen years from the date hereof; to have, hold, and exercise unto the said Thomas Herbert, his executors, administrators, and assigns, the exclusive enjoyment and advantage thereof, for and during and unto the full end and term of fourteen years from the date of these presents next and immediately ensuing, and fully to be complete and ended: Provided always, that if the said Thomas Herbert shall not, within three days after the granting of these Letters of Registration, register the same in the proper office in the Supreme Court, at Sydney, in the said Colony of New South Wales, then these Letters of Registration, and all advantages whatsoever hereby granted, shall cease and become void.

In witness whereof, I have hereunto set my sign manual, and have caused the present Letters of Registration to be sealed with the seal of the said Colony of New South Wales, at Government House, Sydney, in New South Wales, this sixteenth day of June, in the year of our Lord one thousand eight hundred and eighty.

[L.S.] AUGUSTUS LOFTUS.

Herbert's Improved Scoop or Excavator.

A.

TO ALL TO WHOM THESE PRESENTS SHALL COME: I, THOMAS HERBERT, of Moothumbil, Condobolin, in the Colony of New South Wales, send greeting:

WHEREAS I am desirous of obtaining Letters of Registration for securing unto me Her Majesty's special license that I, my executors, administrators, and assigns, or such others as I or they should at any time agree with and no others, should and lawfully might from time to time, and at all times during the term of fourteen years to be computed from the day on which this instrument is left at the office of the Colonial Secretary at Sydney, make, use, exercise, and vend within the Colony of New South Wales an invention for excavating earth and other materials of a like nature, by means of an improved Scoop or Excavator, which carries and deposits the said excavated materials wherever required for the formation of water-holes, reservoirs, dams, cuttings and embankments, road, railway, and other similar works, requiring the excavating and removal of and filling in with the said materials; and in order to obtain the said Letters of Registration, I must, by an instrument in writing under my hand, particularly describe and ascertain the nature of the said invention, and in what manner the same is to be performed:

Now know ye that I, the said Thomas Herbert aforesaid, do hereby declare the nature of the said invention and the manner in which performed, to be particularly described and ascertained in and by the following statements and description, reference being had to the drawings marked Nos. 1 and 2 hereto annexed, and to the letters and figures marked thereon, which indicate the parts therein referred to, and herein particularly explained, that is to say:

SPECIFICATION for an Improved Scoop or Excavator, to be called "Herbert's Improved Earth Scoop and Excavator," which combines in a compact space an efficient scoop easily adjusted for excavating at different depths, a light cart or trolly for carrying the scoop and excavated material and for discharging the latter. The whole apparatus being under the perfect control of only one person is thereby more economical to work, and by the combination and arrangement of the different parts more efficient in its action and more durable than other earth-scoops.

NATURE OF INVENTION.

1. My invention consists of an improved scoop, strongly braced or covered on the top to make it perfectly rigid, and having a cutting edge in the front, and a door or flap at the back to open at will for discharging the earth in the rear.

2. The scoop is suspended between two strong iron guides, bolted to the carriage by two chains—one on each side—fastened at the lower end to strong pins or trunnions securely fixed to the sides of the scoop, and at the upper end to a hoisting arrangement hereinafter described.

3. A handle is fastened to the side of the scoop to bring the latter to the different positions required during the operations of excavating, carrying, and discharging. A locking arrangement is provided to keep the handle in a suitable position to steady the scoop during the hoisting and carrying.

4. A foot treadle attached to a chain is provided to open at will the flap at the back of the scoop for discharging.

5. The hoisting arrangement is so contrived that the scoop may be raised or lowered at will to bring it to the required positions for excavating, carrying, and discharging.

6. The whole apparatus is supported upon a cart, carriage, or trolly, and a seat is provided for the driver, with all the handles &c. for regulating the different motions of the scoop within his reach without leaving his seat.

ADVANTAGES OF THE INVENTION.

The advantages to be derived from my invention are:—

1. Regulating the depth of the cut made by the scoop according to the nature of the ground to be excavated, by placing the stops S S more or less towards the front or rear, to give a lesser or greater depression to the scoop, and ensuring thereby the making of even and level furrows without shocks or jerks during the operation of excavating.

2. Bringing the cutting edge of the scoop out of the ground, raising the scoop above the surface to any necessary height, and discharging it by the driver with one hand only, without stopping the tractive power if necessary.

3. The lightness of draught produced by suspending the loaded scoop to a light carriage with large wheels to be removed where required for discharging.

4. Discharging the scoop effectually by the self-acting latch door at the back without overturning the scoop.

5. The economy and saving of time incident to the regulated and continuous action of the whole apparatus when at work.

I shall now proceed to describe the action of my improved scoop or excavator, with reference to the detailed parts.

The scoop A, as hereinbefore described, moves in the guides G G, and is secured in position by pins or trunnions P P, and suspended by the chains C C over the sheaves or pulleys E E to the spindle or shaft D.

The hoisting arrangement consists of a worm, W, and a worm wheel, W′ fixed to the shaft D, and set in motion by the handle and wheel F, near the seat U.

The arrangement is however replaced in small scoops by a lever handle with brake or ratchet and spring catch, as the loaded scoop is lighter.

The swinging motion of the scoop forward and backward is effected by the handle H to bring the scoop from the position A to that shown by dotted lines for excavating at A′ or for discharging at A″, and, to secure this handle in a vertical position when it is necessary to raise or lower the scoop, the former is made to work in a slide, K, provided with two spring catches, L L′, independent of each other when pressed down by the handle A passing over either of them, but relieved simultaneously by the treadle M to free the slide. Another treadle, N, with crank Q and chain Q′ opens the scoop door, which is fitted with two spring latches,

Herbert's Improved Scoop or Excavator.

R R. The weight of the door and its inclination when opened ensures its closing securely when the scoop is brought back from the discharging to a horizontal position. In small scoops, or in those designed to excavate in light or loose material, a self-acting latch-door is arranged to open for discharging the scoop, by bringing a rod or buffer, acting on the spring latches, in contact with a stop attached to the carriage.

A movable pin, S, already referred to, bolted to each side of the scoop, is placed in suitable holes, to regulate the inclination of the scoop and the depth of the cut.

The whole apparatus is securely fixed to a carriage formed of a light frame-work, OOO, with a seat, U, from which the driver has full command of all movable parts.

Modus operandi.

The *modus operandi* for working the scoop can be described as follows :—1. The depth of the cut having been adjusted by the stops S S according to the nature of the ground to be excavated, and the tractive power being in action, the scoop from the position A is lowered to the ground by a few turns of the wheel F; the handle H is then relieved by pressing upon the treadle M to clear the slide K from the spring catches L L′, and the cutting edge of the scoop brought to the position A′ until the scoop is sufficiently full. 2. The scoop is then brought back to the horizontal position (but on the surface of the ground) by the handle H, which at the same time is secured in a vertical position by the self-acting spring catches L L′ and thus prevents the loaded scoop when raised from tilting backward or forward by any preponderance on the points of suspension P P. A few turns of the wheel F acting on the worm W and worm-wheel W′ and on the pulleys E E, raise the scoop bodily in the guides G G to a sufficient height above the ground to be carried away where required. 3. By pressing down the treadles M and N the door B is opened and the handle H relieved to discharge the scoop, as shown by the dotted line A″.

The scoop being then brought back empty to its former position, the same operation is carried on continuously.

Having set forth the nature of my invention, and the manner in which my improvements are made and carried out in scoops or excavating machines, it is to be clearly understood before I proceed to state my claims, that I do not bind myself to, nor do I claim the particular form, shape, or dimensions of the different parts of my improved scoop and excavator, nor the materials of which they are made (which may be either iron, steel, or any other metal, timber, or substance found suitable for the construction of excavating machines and apparatus), neither do I claim any of my arrangements singly or apart from the objects or purposes of the said invention as herein set forth.

I claim generally the improvements in scoops and excavators I have described, by which I obtain the advantages herein set forth, and I further specially claim, on account of their peculiar novelty—

Firstly—The combined action of my improved scoop in guides with hoisting and locking arrangements, by which the excavating and discharging of the material is accomplished expeditiously and economically, and the loaded scoop raised above the surface of the ground to be carried where required.

Secondly—The adjustment of the scoop to cut an even and regular excavation or furrow to a depth suitable to the nature of the ground to be excavated, by keeping the scoop in a steady position between the guides by means of stops or chains.

Thirdly—The opening of the scoop in the rear for the discharge of the excavated material.

Fourthly—The economy of labour and the lightness of draught ensured by carrying the loaded scoop only a few inches from the ground or at any regulated height under a cart, truck, or carriage with large wheels.

In witness whereof, I, the said Thomas Herbert, have hereunto set my hand and seal, this twenty fourth day of April, in the year of our Lord one thousand eight hundred and eighty.

THOMAS HERBERT,
By his Agent,
Henry Halloran.

Witness—James Gray.

This is the specification, marked A, referred to in the annexed Letters of Registration granted to Thomas Herbert, this sixteenth day of June, A.D. 1880.

AUGUSTUS LOFTUS.

REPORT.

Sir,

Sydney, 10 May, 1880.

We do ourselves the honor to state that we find no objection to the issue of Letters of Registration for an invention to be called "Herbert's Improved Scoop or Excavator," in accordance with Mr. Thomas Herbert's Petition, specification, drawings and claim, transmitted for our report under your blank cover communication of the 24th ultimo, No. 3,336.

We have, &c.,
GOTHER K. MANN.
JAMES BARNET.

The Principal Under Secretary.

[Drawings—two sheets.]

DRAWING Nº 1.

HERBERT'S IMPROVED SCOOP & EXCAVATOR.

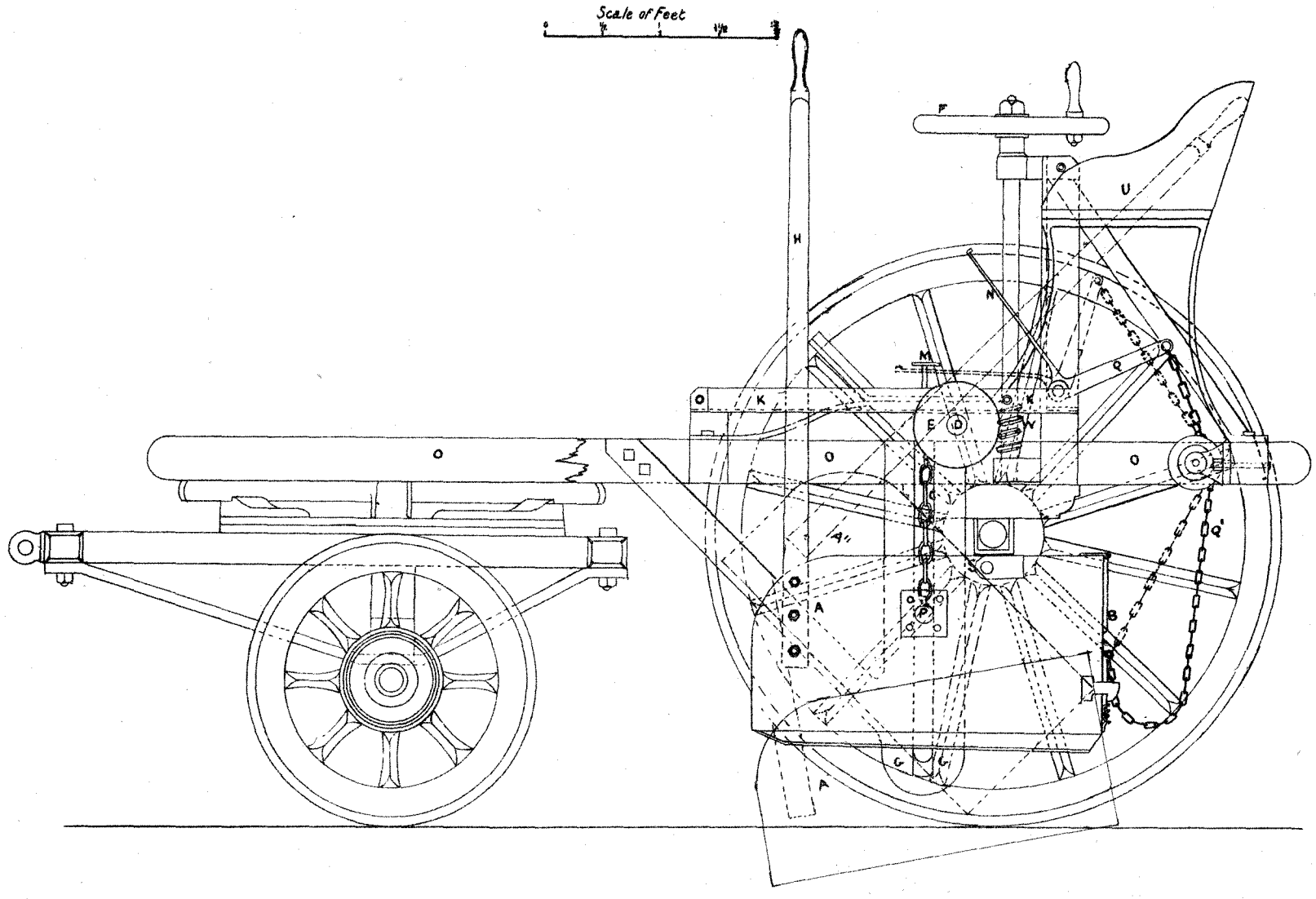

Fig 1.

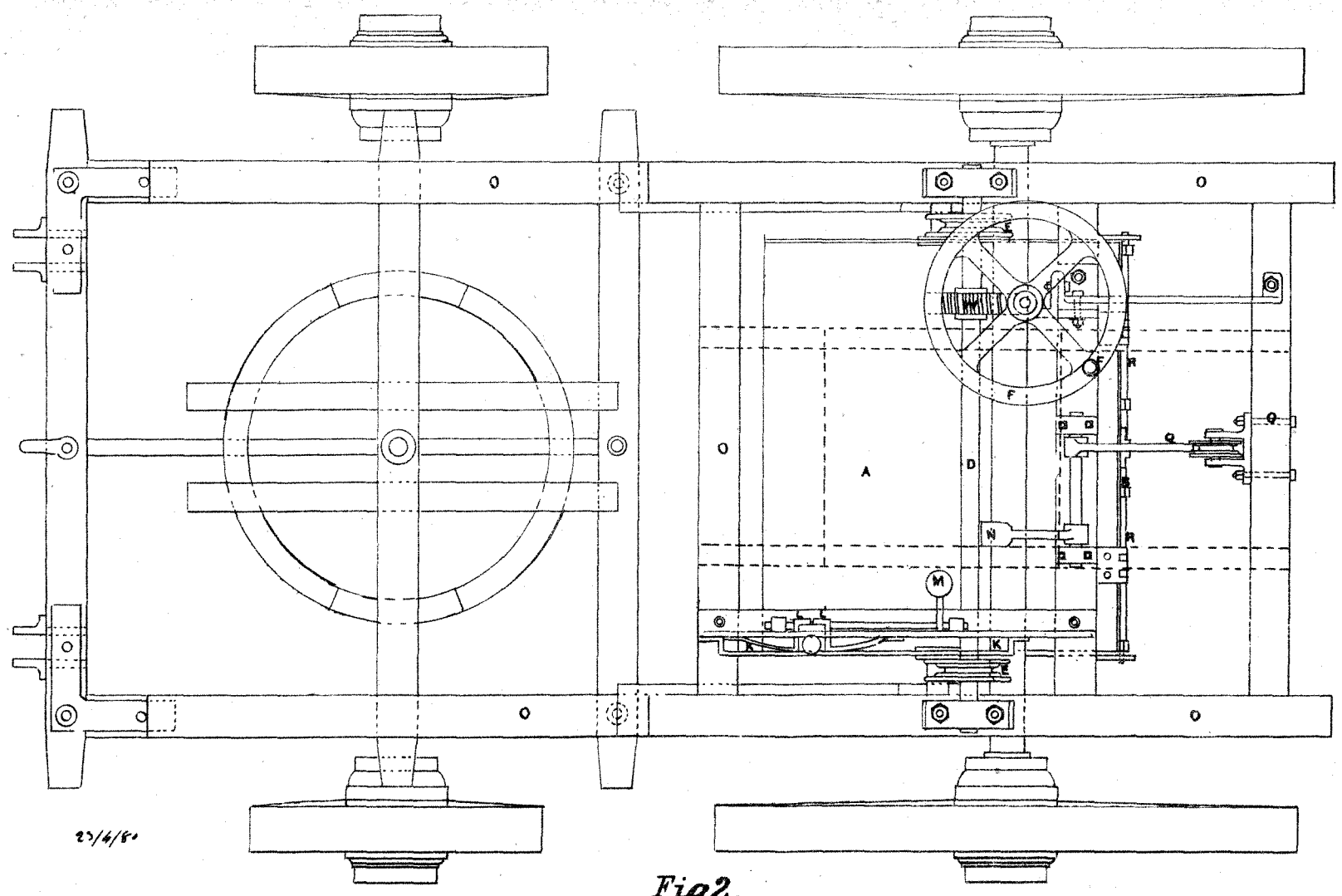

Fig 2.

Thomas Herbert
by Henry Hellaby

This is the Sheet of Drawings marked B referred to in the annexed Letters of Registration, granted to Thomas Herbert this sixteenth day of June, A.D., 1880.

Augustus Loftus

(Sig: 357-)

C

[840]

DRAWING Nº 2.

HERBERT'S. IMPROVED SCOOP & EXCAVATOR.

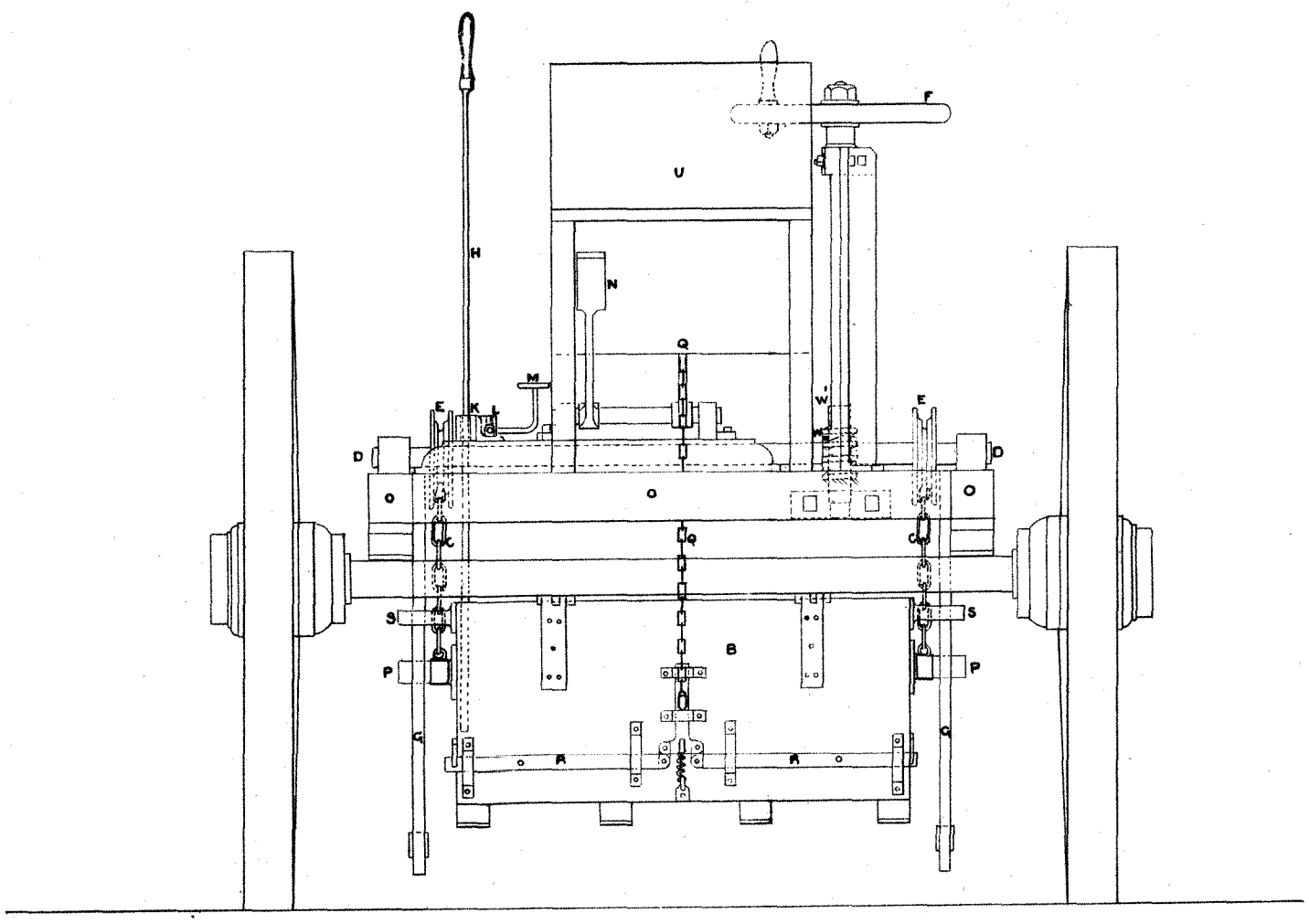

Fig 3.

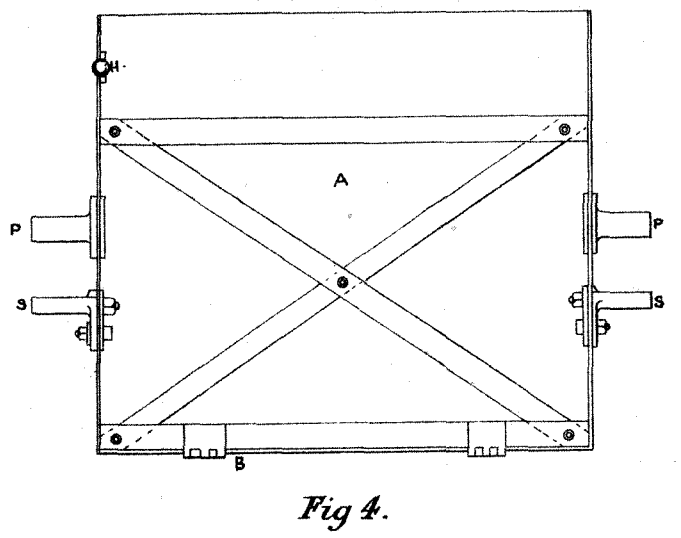

Fig 4.

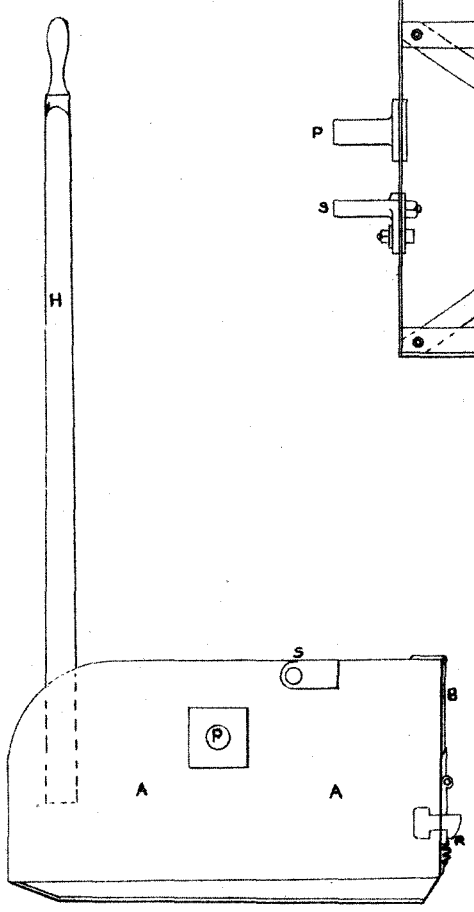

Fig 5.

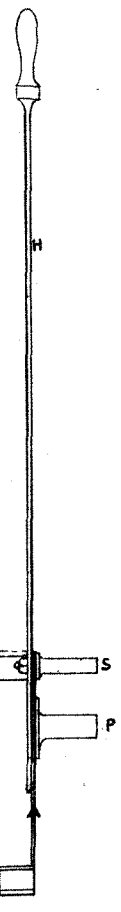

Fig 6.

23/4/80

This is the sheet of Drawings marked "C" referred to in the annexed Letters of Registration granted to Thomas Herbert this Sixteenth day of June A.D. 1880.

(Sig: 357-)

Thomas Herbert
by his agent
Henry Hathaway

"Augustus Sotheo."

PHOTO-LITHOGRAPHED AT THE GOVT. PRINTING OFFICE
SYDNEY, NEW SOUTH WALES

A.D. 1880, 16*th June*. No. 841.

APPARATUS FOR MANUFACTURING ILLUMINATING GAS FROM LIQUID HYDROCARBON.

LETTERS OF REGISTRATION to James Henry Needles, for an Apparatus for manufacturing Illuminating Gas from liquid Hydrocarbon.

[Registered on the 18th day of June, 1880, in pursuance of the Act 16 Vic. No. 24.]

BY His Excellency the Right Honorable Sir Augustus William Frederick Spencer Loftus (commonly called Lord Augustus Loftus), Knight Grand Cross of the Most Honorable Order of the Bath, a Member of Her Majesty's Most Honorable Privy Council, Governor and Commander-in-Chief of the Colony of New South Wales and its Dependencies.

TO ALL TO WHOM THESE PRESENTS SHALL COME, greeting:

WHEREAS James Henry Needles, of the City of Toronto, in the County of York, Province of Ontario, Canada, hath by his Petition humbly represented to me that he is the author or designer of a certain invention or improvement in manufactures, that is to say, of an invention of "Apparatus for manufacturing Illuminating Gas from liquid Hydrocarbon, commonly known as Gasoline," which is more particularly described in the specification and the sheet of drawings which are hereunto annexed; and that he, the said Petitioner, hath deposited with the Honorable the Treasurer of the said Colony of New South Wales the sum of Twenty Pounds sterling, for defraying the expense of granting these Letters of Registration, as required by the Act of Council, sixteenth Victoria, number twenty-four; and hath humbly prayed that I would be pleased to grant Letters of Registration, whereby the exclusive enjoyment and advantage of the said invention or improvement might be secured to him for a period of fourteen years: And I, being willing to give encouragement to all inventions and improvements in the arts or manufactures which may be for the public good, and having received a report favourable to the prayer of the said Petition, from competent persons appointed by me to examine and consider the matters stated therein and to report thereon for my information, am pleased, with the advice of the Executive Council, and in exercise of the power and authority given to me by the said Act of Council, to grant, and do by these Letters of Registration grant unto the said James Henry Needles, his executors, administrators, and assigns, the exclusive enjoyment and advantage of the said invention or improvement, for and during the term of fourteen years from the date hereof; to have, hold, and exercise unto the said James Henry Needles, his executors, administrators, and assigns, the exclusive enjoyment and advantage thereof, for and during and unto the full end and term of fourteen years from the date of these presents next and immediately ensuing, and fully to be complete and ended: Provided always, that if the said James Henry Needles shall not, within three days after the granting of these Letters of Registration, register the same in the proper office in the Supreme Court, at Sydney, in the said Colony of New South Wales, then these Letters of Registration, and all advantages whatsoever hereby granted, shall cease and become void.

In witness whereof, I have hereunto set my sign manual, and have caused the present Letters of Registration to be sealed with the seal of the said Colony of New South Wales, at Government House, Sydney, in New South Wales, this sixteenth day of June, in the year of our Lord one thousand eight hundred and eighty.

[L.S.] AUGUSTUS LOFTUS.

SPECIFICATION.

Apparatus for manufacturing Illuminating Gas from liquid Hydrocarbon.

SPECIFICATION.

TO ALL WHOM IT MAY CONCERN: Be it known that I, JAMES HENRY NEEDLES, of the City of Toronto, in the County of York, Province of Ontario, have invented certain new and useful improvements in apparatus for manufacturing Illuminating Gas from liquid Hydrocarbon, or commonly known as Gasoline, and I do hereby declare that the following is a full, clear, and exact description thereof, reference being had to the accompanying drawings and to the letters of reference marked thereon, making a part of this specification.

THE nature of my invention consists in the construction and arrangement of an apparatus for manufacturing illuminating gas from gasoline or other light hydrocarbon liquids, as will be hereinafter more fully set forth, in order to enable others skilled in the art to which my invention appertains to make and use the same.

I will now proceed to describe its construction and operation in train, referring to the annexed drawings, in which fig. 1 is a top view of my entire apparatus, and fig. 2 is a vertical section of the same.

Fig. 8 is a gas generator; fig. 3 is a gas-holder; fig. 4 is an air-pump; fig. 5 is a seal; fig. 6 is a valve chamber; fig. 7 is also a valve chamber.

Fig. B is the gasometer or gas-holder, built conical in form, the lower half of which is built of sheet-iron or other sheet metal, the upper half of the holder is made of suitable rubber-cloth or other flexible material made to hold gas. The object sought in the construction of the holder is to give double the holder capacity in the same space and dispense with the ordinary cistern, and avoid the necessity of water, which is liable to freeze in winter. The upper half of the holder is guided by the means of an iron rod fastened in the centre of the bottom part of the holder and through the crown of the upper half; a hollow pipe is fastened to the crown of the upper half of the holder, in its centre, about 12 inches longer than the height of the entire holder; the hollow pipe slides on the iron rod, which is fastened to the bottom of the holder, or the iron rod passes inside of the hollow pipe, as the crown or upper half of the holder passes down or recedes as the gas is being used. Columns are used, and a piece is passed over the top of the holder, fastened to the columns through which the hollow pipe passes, thus forming a guide for the upper half of the holder as it passes up and down; it will be seen that as the upper part or rubber portion of the holder passes downwards, the crown being iron and guided by the rod and hollow pipe, that it passes down and merely draws the rubber with it, so that when the crown is down to the bottom of the holder the rubber is in line with the iron of the lower part of the holder, thus expelling all the gas from the holder; it will readily be seen that by this kind of a gas-holder any desired pressure on the gas, whilst it is being used, can be obtained, which is of great importance in the use and economy of gas. A is the gasoline or liquid hydrocarbon tank or drum, arranged in its interior parts with an oval cap F in the bottom, and directly over an inlet pipe which enters the tank at the bottom in the centre of the tank; said cap is constructed so as to spread the oxygen and nitrogen or common air all over the bottom surface of the tank; and directly above said cap F is placed a mixing diaphragm, E^2, and at or about 3 inches below the top or crown of tank another mixing diaphragm is placed, with its perforations transverse to the perforations of the lower one. The mixing diaphragms are plates of sheet metal, peculiarly perforated with very small holes. The two diaphragms cover all over the top and bottom of tank, and in between the top and bottom perforated plates is filled with any good porous or absorbent material, such as sponge, cotton, or fine white pine sawdust. The object of the porous material is to hold the liquid in its contents in a partial vapour form, and keep it directly from going to the bottom of the tank in liquid form, so that when the oxygen and nitrogen or common air is by the cap F spread over the bottom of the tank, in the vacuum between the bottom of the tank and the lower mixer, it will pass up through the lower mixer, being evenly distributed, and then pass directly under pressure from the pump up through the sawdust or porous material, and then through the upper mixer at the top of the tank into the vacuum at the top of the tank, and is led from there to the holder. Thus it will at once be seen that by this process of admitting the air at the bottom of the tank, under the cap, and then passing it through the mixers and through the porous material, which is saturated with liquid hydrocarbon, and held in a partial vapour form, that a full and thorough mixing of the three natural elements required in the manufacture of an illuminating gas is obtained by this process. It will be seen that a uniform light can be obtained at any temperature, and no residue of material, thus a great saving of material is obtained, much more so than when the air is passed through the liquid. O is the air-pump, constructed with piston and ports; when the pump has to be run by power, such as steam or water power, it is built like an engine with all its bearings. C is a seal placed between the tank A and the pump, and the air passes from the pump on its way to the tank through this seal, and it is constructed like a box, with a partition fastened to the lid, and dips down near the bottom of the lower part of the box. At one end of the box is an inclined plane that runs from the bottom of the box, starting at the partition and running slant on to near the top of the box; at the deepest end of the box the inlet pipe enters it; the end of the box where the inclined plane is highest the outlet pipe is put. The box is partially filled with quicksilver or some other material that is not liable to freeze; the end of the inlet pipe is calculated to dip down into the quicksilver, about 1 inch in depth, the partition dips down the same depth. When the pump is started the quicksilver is forced up the incline piece, and lets the air pass out at the outlet pipe; as soon as the pump stops, the quicksilver falls back around the bottom of the partition and around the end of the inlet pipe, sealing them securely, so that nothing in the way of gas or air can pass back to the pump. The main object sought by this seal is to prevent the possibility of the gas passing back to the pump or into the building or room where the pump may be placed. In case that any valve should leak or be left unshut, the seal prevents any possible escape of gas. S is a three-way valve chamber, containing three valves peculiarly constructed for the purpose of conducting and directing the air in three different directions, as it is forced from the pump on its way to the holder; at each stroke of the pump these three valves convey the air in three different ways for the purpose of accomplishing the desired candle power and specific gravity of the gas. By these three valves and by their connecting pipes the operator has the gravity and the candle power of the gas under his control at all times and in all climates, as desired. By this means the operator can in a few moments change the candle power of the gas to the number of any candles desired up to eighteen or twenty candle power, and the valves are all three placed in one air-tight box, with an outlet from each of them from the bottom

of

of the box, the valves set on the end of the outlet pipes, with a stem passing a short distance down into the pipe for a guide; the stem is provided with a valve faced with leather, and the stem passes up through the top of the lid on the box, and a spiral spring is put over the stem, between the lid of the box and the valve, so that the spring forces the valve down into the end of the pipe perfectly gas-tight, said stem supplied with a stuffing-box; at the top of the stem is a wire cord fastened, which is passed over a pulley or sheave, directly in line with the valve stem, and passing from the valve into the building, at the pump or any other place; at the end of this wire is placed a small lever, and by the pulling of the lever a slight pull the valves are opened, any one of the three; that when the lever is let go the spring on the stem at once closes the valve, so that no gas can go back. T is a valve placed between the tank A and the holder, and operated as the valves S for the purpose of shutting off the gas from returning from the holder to the tank. H is the pipe leading from the air-pump into the seal G. J is the pipe leading from the seal G to the valves S. R is a pipe leading from valves S into tank A, directly under its bottom in the centre and directly under cap F, for the purpose of admitting air in at bottom of the tank, and passing it up through the mixers and the sawdust, and to carry off the hydrogen and mix it with the common air. L is a pipe leading from valve chamber S through the top of the tank A, directly over the top of upper mixer, for the purpose of taking a less quantity of hydrogen when desired. N is a pipe leading from the three-way valve chamber S, around the tank, and entering the outlet pipe from tank A to the gas-holder outside of the tank, for the purpose of admitting the common air into the holder directly, without passing through the hydrogen; by this process and pipe the gas in the holder can be reduced to any candle power and specific gravity desired, and by the construction of pipe R, pipe L, and pipe N, and the three valves in chambers S, the full control of the candle power of the gas is obtained at the will of the operator, by having control of the quantity of oxygen, hydrogen, and nitrogen required. W is the outlet pipe from tank T. V is a pipe leading from valve T into the holder, for the purpose of conducting the gas into the holder. M is a pipe leading from the holder to the building to be lighted.

Having thus fully described my invention, what I claim as new and desire to secure by Letters Patent is,—

1. The combination of the tank A with the oval cap F, mixing diaphragms E and E^2, and porous material, substantially as and for the purpose specified.
2. The combination of the air-pump O with pipe H, seal C, pipe J, valve S, pipe R, pipe L, pipe N, arranged and operating substantially as described and for the purpose set forth.
3. Valve T, pipe W, pipe V, pipe M, and gasometer B, substantially as described.
4. The valves and valve chambers S, pulleys or sheaves, and wire cords, and stuffing-boxes as described and for the purpose set forth.

In testimony that I claim the foregoing I have hereunto set my hand, this 3rd day of May, 1880.

J. H. NEEDLES,
(By his Attorney, H. T. SMITH.)

This is the specification referred to in the annexed Letters of Registration granted to James Henry Needles, this sixteenth day of June, A.D. 1880.

AUGUSTUS LOFTUS.

REPORT.

Sir, Sydney, 8 May, 1880.

The application of Mr. James H. Needles for Letters of Registration for "Apparatus for manufacturing Illuminating Gas from liquid Hydrogen (Hydrocarbon being evidently meant) commonly known as Gasoline," having been referred to us, we have examined the specification and drawings accompanying the same, and have now the honor to report that we see no objection to the issue of Letters of Registration as prayed for.

We have, &c.,
J. SMITH.
CHAS. WATT.

The Principal Under Secretary.

[Drawings—one sheet.]

FIG. 2.

NEEDLES'
GAS APPARATUS

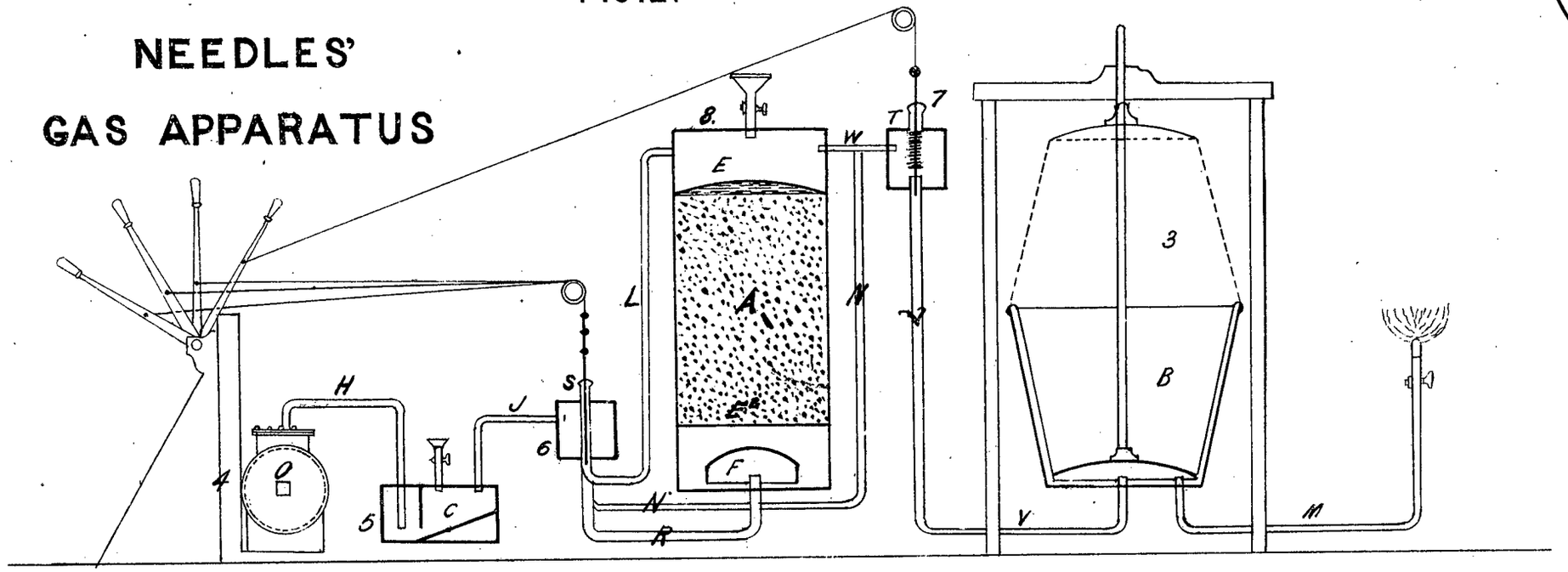

A. Gasoline Tank. B. Gasometer, C. Seal,
F. Oral cap, EE² Mixing Diaphrams H Pipe
O. Air-pump M.J. Pipes L.N. Pipes
R. Valve S. Three way valve T. Valve.
V. Pipe W. Outlet pipe.

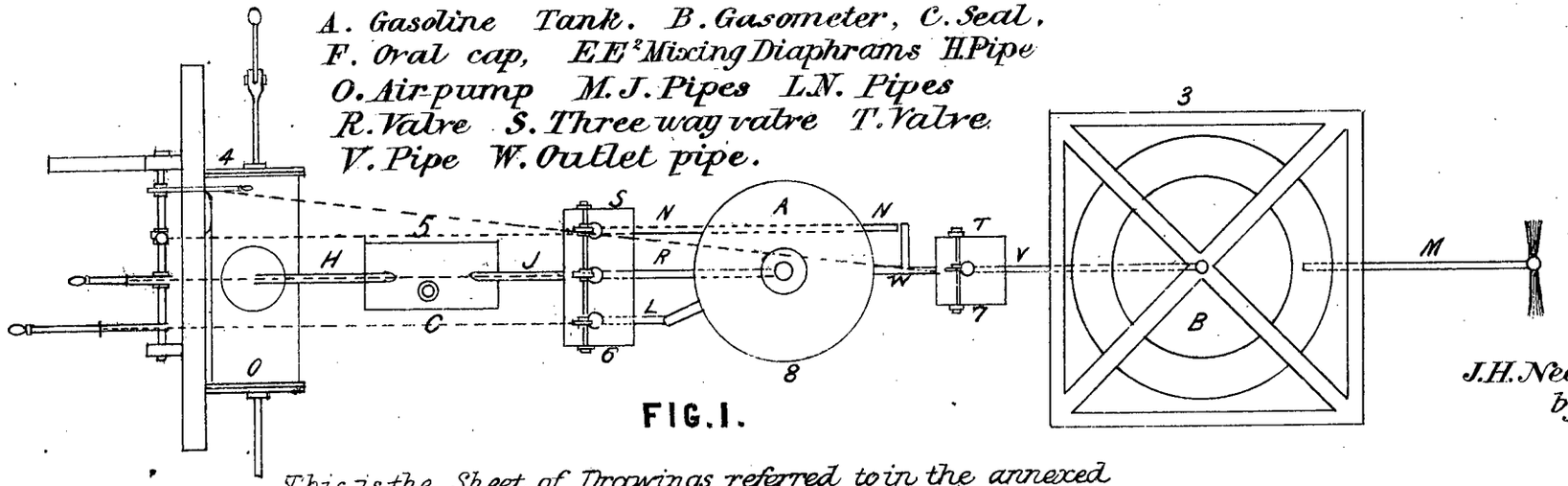

FIG. 1.

J.H. Needles
by his attorney
H.T. Smith.

This is the Sheet of Drawings referred to in the annexed Letters of Registration granted to James Henry Needles this Sixteenth day of June, A.D. 1880. Augustus Loftus.

(Sig: 357-)

A.D. 1880, 21*st June*. No. 842.

IMPROVED PROCESS AND APPARATUS FOR THE MANUFACTURE OF AMMONIA AND ITS COMPOUNDS.

LETTERS OF REGISTRATION to James Pellatt Rickman and Jacob Baynes Thompson, for an Improved Process and Apparatus for the manufacture of Ammonia and its compounds.

[Registered on the 21st day of June, 1880, in pursuance of the Act 16 Vic. No. 24.]

BY His Excellency the Right Honorable Sir Augustus William Frederick Spencer Loftus (commonly called Lord Augustus Loftus), Knight Grand Cross of the Most Honorable Order of the Bath a Member of Her Majesty's Most Honorable Privy Council, Governor and Commander-in-Chief of the Colony of New South Wales and its Dependencies.

TO ALL TO WHOM THESE PRESENTS SHALL COME, greeting:

WHEREAS James Pellatt Rickman, of St. Bride-street, in the City of London, England, and Jacob Baynes Thompson, of New Cross, in the County of Kent, England, have by their Petition humbly represented to me that they are the authors or designers of a certain invention or improvement in manufactures, that is to say, of an invention entitled "An improved Process and Apparatus for the manufacture of Ammonia and its compounds," which is more particularly described in the specification and the sheet of drawings which are hereunto annexed; and that they, the said Petitioners, have deposited with the Honorable the Treasurer of the said Colony of New South Wales the sum of Twenty Pounds sterling, for defraying the expense of granting these Letters of Registration, as required by the Act of Council, sixteenth Victoria, number twenty-four; and have humbly prayed that I would be pleased to grant Letters of Registration, whereby the exclusive enjoyment and advantage of the said invention or improvement might be secured to them for a period of fourteen years: And I, being willing to give encouragement to all inventions and improvements in the arts or manufactures which may be for the public good, and having received a report favourable to the prayer of the said Petition, from competent persons appointed by me to examine and consider the matters stated therein and to report thereon for my information, am pleased, with the advice of the Executive Council, and in exercise of the power and authority given to me by the said Act of Council, to grant, and do by these Letters of Registration grant unto the said James Pellatt Rickman and Jacob Baynes Thompson, their executors, administrators, and assigns, the exclusive enjoyment and advantage of the said invention or improvement, for and during the term of fourteen years from the date hereof; to have, hold, and exercise unto the said James Pellatt Rickman and Jacob Baynes Thompson, their executors, administrators, and assigns, the exclusive enjoyment and advantage thereof, for and during and unto the full end and term of fourteen years from the date of these presents next and immediately ensuing, and fully to be complete and ended: Provided always, that if the said James Pellatt Rickman and Jacob Baynes Thompson shall not, within three days after the granting of these Letters of Registration, register the same in the proper office in the Supreme Court, at Sydney, in the said Colony of New South Wales, then these Letters of Registration, and all advantages whatsoever hereby granted, shall cease and become void.

In witness whereof, I have hereunto set my sign manual, and have caused the present Letters of Registration to be sealed with the seal of the said Colony of New South Wales, at Government House, Sydney, in New South Wales, this twenty-first day of June, in the year of our Lord one thousand eight hundred and eighty.

[L.S.] AUGUSTUS LOFTUS.

SPECIFICATION

Improved Process and Apparatus for the manufacture of Ammonia, &c.

SPECIFICATION of JAMES PELLATT RICKMAN, of St. Bride-street, in the City of London, England, and JACOB BAYNES THOMPSON, of New Cross, in the County of Kent, England, for an invention entitled "An improved Process and Apparatus for the manufacture of Ammonia and its compounds."

OUR invention relates to means of obtaining cheaply ammonia and its compounds by the chemical reactions that take place when carbonaceous matter undergoes slow combustion in the presence of air and water vapour, whereby there is effected a combination of nitrogen from the air with hydrogen from the water. We utilise these reactions either for the production of ammonium chloride, which can be afterwards decomposed to furnish ammonia or others of its compounds, or for the production of ammonium sulphate or chloride, or of an aqueous solution of ammonia itself, as we will now describe.

For the production of ammonium chloride, we mix from four to eight per cent. of common salt with small coal, and subject the mixture to slow combustion in a furnace similar to a gas producer having a restricted supply of air along with water vapour. By means of a pump, exhauster, steam ejector, or fan, we cause the fumes from the furnace to bubble through water in a series of successive cells, which thus become charged with a solution of ammonium chloride. It is not necessary that the whole of the fuel be mingled with salt, as the furnace may contain a body of coke or coal undergoing slow combustion with a layer of the salt and coal-dust mixture spread over it, this layer being renewed from time to time as the combustion proceeds. An ordinary coke oven may be employed in this manner, water vapour being supplied along with the small quantity of air which is usually admitted to the fuel. The vapour may be supplied by a steam pipe opening into the ashpit, or by causing water to trickle upon a metal plate laid in the ashpit exposed to the radiation of heat from the burning fuel above. Instead of common salt, calcium, chloride, or other haloid salt may be mixed with the fuel, common salt being generally preferable on account of its cheapness. Also, instead of small coal, other carbonaceous matter might be employed.

Ammonium sulphate or chloride may be produced by a modification of the process, according to which we dispense with the mixture of salt with the fuel, and pass the fumes through a solution of sulphuric or hydrochloric acid. For this purpose we employ apparatus of the kind represented in the accompanying drawings—figure 1 showing a longitudinal section of the furnace, and figure 2 being a section of the condensing cells, with a front view of the furnace. The fire-grate of the furnace consists of plates A arranged as steps. Below these is an ashpit, on the floor of which is placed an iron plate B. Water is admitted by a pipe C, provided with a stop-cock, so as to drop or trickle on the plate B, on which it is vapourized by the heat radiated downwards. By a valve or slide, D, on the ashpit door the supply of air is regulated so as to maintain slow combustion of the fuel on the grate A. E is the fire-door, which should be of large size to give convenient access for distributing the fuel over the grate. The fumes are drawn by the action of a fan or other exhauster through bent pipes F, and made to bubble through the liquid in the successive cells G. These cells are supplied with water to make up for that which passes away in vapour from a pipe H, having a branch and stop-cock for each cell. The contents of the cells are drawn off by stop-cock K. When the fuel used contains a large proportion of sulphur it is most advantageous to charge the cells with a solution of sulphuric acid, in which case they will after a time be found to contain ammoninum sulphate in solution. When the fuel is comparatively free from sulphur, the cells may be charged with a solution of hydrochloric acid, in which case ammonium chloride will be found in solution in the cells. When very pure fuel, such as charcoal, is employed, the cells may be charged with water, in which case an aqueous solution of ammonia will be produced.

We claim as our invention—

First—The manufacture of ammonium chloride by subjecting carbonaceous matter mixed with common salt or other haloid salt to slow combustion in the presence of air and water vapour, and condensing the fumes resulting from the combustion by causing them to pass through water in a series of successive cells, substantially as herein described.

Second—The manufacture of ammonia and its compounds by subjecting carbonaceous matter to slow combustion in the presence of air and water vapour, and condensing the fumes resulting from the combustion by causing them to pass through water or acid solutions in a series of successive cells, substantially as herein described.

Third—The combination of a slow combustion furnace or producer with a series of condensing cells, arranged and operating substantially as and for the purposes herein described with reference to the accompanying drawings.

This is the specification referred to in the annexed Letters of Registration granted to James Pellatt Rickman and Jacob Baynes Thompson, this twenty-first day of June, A.D. 1880.

AUGUSTUS LOFTUS.

REPORT.

Sir,

Sydney, 20 May, 1880.

The application of Messrs. J. P. Rickman and J. B. Thompson for Letters of Registration for an "Improved Process and Apparatus for the manufacture of Ammonia and its compounds" having been referred to us, we have examined the specification and drawings accompanying the same, and have now the honor to report that we see no objection to the issue of Letters of Registration as prayed for.

We have, &c.,

J. SMITH.

The Principal Under Secretary.

CHAS. WATT.

[Drawings—one sheet.]

[842]

Fig: 2

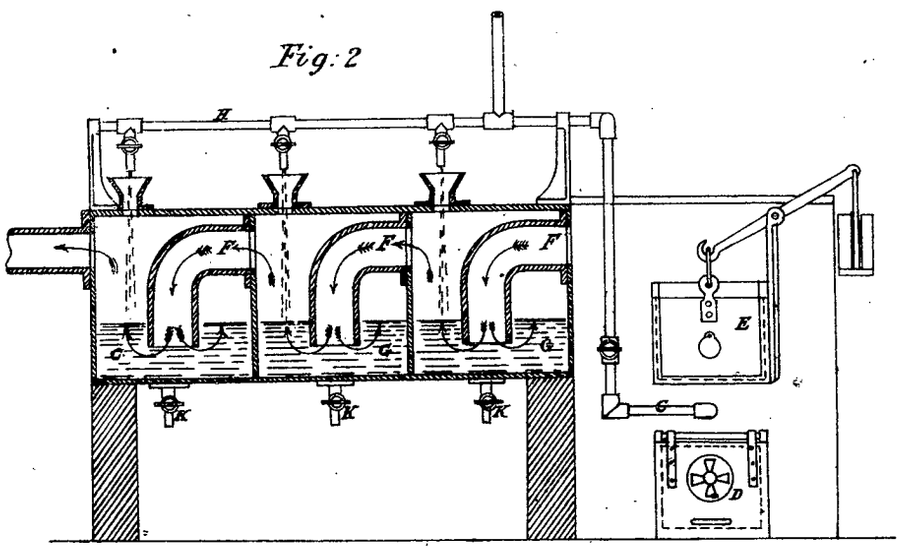

Fig: 1

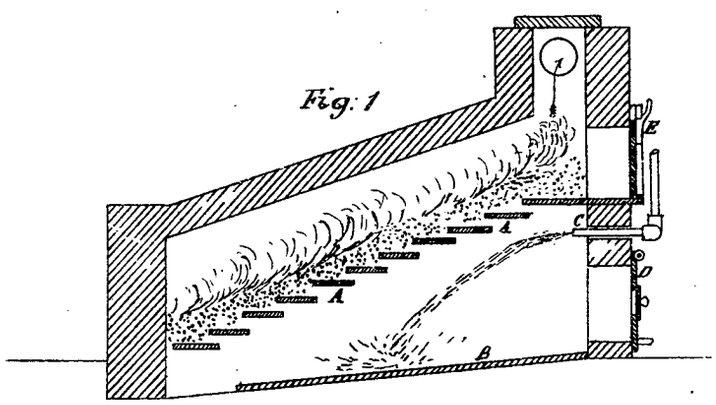

This is the sheet of Drawings referred to in the annexed Letters Registration granted to James Pellatt Rickman and Jacob Baynes this twenty first day of June - AD 1880. " Augustus Loftus

(Sig. 357)

PHOTO-LITHOGRAPHED AT THE GOVT. PRINTING OFFICE, SYDNEY, NEW SOUTH WALES.

A.D. 1880, 21*st June*. No. 843.

IMPROVEMENTS IN TELEPHONES.

LETTERS OF REGISTRATION to Thomas Alva Edison, for Improvements in Telephones.

[Registered on the 21st day of June, 1880, in pursuance of the Act 16 Vic. No. 24.]

BY HIS EXCELLENCY THE RIGHT HONORABLE SIR AUGUSTUS WILLIAM FREDERICK SPENCER LOFTUS (commonly called LORD AUGUSTUS LOFTUS), Knight Grand Cross of the Most Honorable Order of the Bath, a Member of Her Majesty's Most Honorable Privy Council, Governor and Commander-in-Chief of the Colony of New South Wales and its Dependencies.

TO ALL TO WHOM THESE PRESENTS SHALL COME, greeting:

WHEREAS THOMAS ALVA EDISON, of Menlo Park, New Jersey, in the United States of America, hath by his Petition humbly represented to me that he is the author or designer of a certain invention or improvement in manufactures, that is to say, of an invention of "Improvements in Telephones," which is more particularly described in the specification and the sheet of drawings which are hereunto annexed; and that he, the said Petitioner, hath deposited with the Honorable the Treasurer of the said Colony of New South Wales the sum of Twenty Pounds sterling, for defraying the expense of granting these Letters of Registration, as required by the Act of Council, sixteenth Victoria, number twenty-four; and hath humbly prayed that I would be pleased to grant Letters of Registration, whereby the exclusive enjoyment and advantage of the said invention or improvement might be secured to him for a period of fourteen years: And I, being willing to give encouragement to all inventions and improvements in the arts or manufactures which may be for the public good, and having received a report favourable to the prayer of the said Petition, from competent persons appointed by me to examine and consider the matters stated therein and to report thereon for my information, am pleased, with the advice of the Executive Council, and in exercise of the power and authority given to me by the said Act of Council, to grant, and do by these Letters of Registration grant unto the said Thomas Alva Edison, his executors, administrators, and assigns, the exclusive enjoyment and advantage of the said invention or improvement, for and during the term of fourteen years from the date hereof; to have, hold, and exercise unto the said Thomas Alva Edison, his executors, administrators, and assigns, the exclusive enjoyment and advantage thereof, for and during and unto the full end and term of fourteen years from the date of these presents next and immediately ensuing, and fully to be complete and ended: Provided always, that if the said Thomas Alva Edison shall not, within three days after the granting of these Letters of Registration, register the same in the proper office in the Supreme Court, at Sydney, in the said Colony of New South Wales, then these Letters of Registration, and all advantages whatsoever hereby granted, shall cease and become void.

In witness whereof, I have hereunto set my sign manual, and have caused the present Letters of Registration to be sealed with the seal of the said Colony of New South Wales, at Government House, Sydney, in New South Wales, this twenty-first day of June, in the year of our Lord one thousand eight hundred and eighty.

[L.S.] AUGUSTUS LOFTUS.

SPECIFICATION

Improvements in Telephones.

SPECIFICATION of THOMAS ALVA EDISON, of Menlo Park, New Jersey, in the United States of America, for "Improvements in Telephones."

THIS invention relates to Telephones, or apparatus by means of which sound, and in particular articulate sounds, may be transmitted by the agency of electricity, and corresponding sounds be produced at a distance.

In carrying out this invention there is employed at each station a transmitting instrument, hereinafter termed the "transmitter," and a receiving instrument, hereinafter termed the "receiver," each provided with a tympan, and constructed and arranged as hereinafter described; a galvanic battery, an induction coil, having primary, secondary, and tertiary wires, a relay, and a call bell or sounder. The transmitter is placed in the primary circuit of the induction coil, the receiver is placed in the tertiary circuit of the said coil, whilst the secondary circuit forms the main line wire which communicates between two or more stations.

The general principle of the operation of the apparatus is as follows:—By the act of producing sound (say for example speaking) opposite the tympan of the transmitter, the said tympan is thrown into vibration, and by the means hereinafter described, a variation is produced in the resistance to the passage of the current flowing through the closed primary, varying tension is thereby generated in the secondary circuit of the induction coil, which constitutes the main line wire, and also in the tertiary circuit in which the receiver at the distant station is placed. The current passing through the wires is thus thrown into undulations, which act upon the receiver at the distant station, thus producing at the receiving station sounds corresponding to those which actuated the tympan of the said transmitter.

The call bell or sounder is placed in a local circuit, and is operated by the relay of the same station, connected with the line wire; the said relay being brought into action so as to complete the local circuit by the act of operating a key at the distance station.

In order that the said invention may be perfectly understood, I shall now proceed particularly to describe the same, and for that purpose shall refer to the several figures on the accompanying sheet of drawings, the same letters of reference indicating corresponding parts in all the figures.

Figure 1 of the accompanying drawings represents in sectional elevation a general view of the instruments and their constructions for the purpose of telephonic communications between two stations, marked respectively No. 1 and No. 2, the transmitters being for the sake of clearness drawn to their natural size, whilst the other parts of the apparatus are drawn to a scale of one half size.

Figure 2 represents an elevation of one of the receivers shown detached with the cover removed; and figure 3 is a transverse section of the same. A A are the transmitters; B B are the receivers; C C are the batteries; D D are the induction coils; *a* being their primary circuit (shown in thick lines) in which the transmitter is placed; *b* their secondary circuit (indicated in thick dotted lines) which constitutes the main line; and *c* their tertiary circuit (denoted by series of thick short lines and dots), in which the receiver is placed; E E are the relays; and F F are the call bells or sounders; *d d* being the local circuits (indicated by a series of short fine lines in the drawing) in which the call bells or sounders are placed.

The transmitter is constructed in the following manner:—*e* is a shell of metal (by preference cast iron) on which is secured a disc; *f* of brass (for example) platinized on its top surface f^1, around which disc is arranged a ring, *g*, of vulcanite or other suitable non-conducting material, projecting above the surface of the disc for a sufficient height to form a cup. Into this cup is inserted a button, *h*, of carbon (by preference the finest lamp-black, moulded and consolidated under pressure), and upon the top of this surface button is placed another metal disc *i* platinized upon its surface. The terminal A^1 of the divided portion A^4 of the wire *a* is connected to the disc *i* by means of a strip, *k*, of platinum, whilst the terminal a^2 of such portion of the said wire is attached to the shell *e*. The carbon button *h* with the metal disc *i* is thus interposed in the electric circuit, and it is so arranged as to be susceptible of mechanical influence from the exterior in the following manner:—

On the rim of the shell *e* is placed a membrane or tympan, *l*, of mica or iron (for example), which is held firmly at its edges by the mouthpiece *m* attached by screws to the shell *e*, the tympan being thus clamped between the mouthpiece and the shell. The tympan is provided with a boss at its centre, through which passes a screw, *n*, the point of which bears upon the disc *i* faced with non-conducting material. In fitting the parts together the screw *n* is turned until the tympan *l*, the disc *i*, and the carbon button *h*, are brought into such relationship as to produce a minimum but actual contact between the surfaces of all, but not to establish the contact to such an extent as to constitute an additional degree of pressure.

The apparatus operates in the following manner:—

By producing sound (say for example, speaking) into the mouthpiece *m*, the tympan *l* is thrown into vibration, and the effect being transmitted to the disc *i* and the carbon button *h*, their positions in relation to each other are varied, greater or less intimacy of contact being produced between the two surfaces of the carbon button *h* and the discs *i f* on opposite sides of it. By these means a greater or less number of points in the contiguous surfaces are brought into contact as the tympan is vibrated, whereby the resistance to the passage of the current is varied, and the current passing through the primary circuit *a* is transformed into an undulatory one, the induced current passing through the secondary circuit or main line *b*, is also converted into an undulatory current, and thence a similar change takes place in the induced current passing through the tertiary circuit *c*, in which the receiver at the distant station is placed; the undulations of which current exactly correspond to the waves of sound which originally acted the tympan at the sending station.

The receivers *b b* are constructed in the following manner, reference being had to the general view, figure 1 and the details. Figure *o* is a cylinder of chalk, moulded upon a shaft, *p*, which is supported in bearings *q q* attached to the casing *r*, and is extended beyond the casing, and provided at its outer extremity with the worm wheel *s*, which engages a worm, s^1, on a spindle, *t*, the latter being provided with a crank handle, *t i*, for the facility of turning the worm *s i*, and thence imparting rotary motion to the chalk cylinder; *u* is a disc or tympan of mica, which is attached at its edges by the cover *v* and screws to the casing *r*, and carries at its centre a strip or arm, *v*, of brass, faced or tipped with paladium at *v* 2, which projects over the cylinder *o*, and is maintained in yielding contact with the chalk by means of an india-rubber spring or cushion, *w*, the pressure of which is regulated by means of a screw, w^1. The terminal

terminal c^1 of the divided portion c^3, of the tertiary wire c, is connected with the brass strip or arm v^1; and the terminal c^2 of such portion of the said wire is connected to one of the bearings q q of the shaft p, on which the chalk cylinder o is mounted; the chalk cylinder o and the brass strip or arm v^1 are thus in the circuit, so that the electric current is caused to pass from the brass strip or arm to and through the chalk cylinder at the point of contact with the strip or arm. The chalk is moistened with pure or distilled water at long intervals, so as to maintain it in a humid condition, and when the electric current passes a chemical action is produced on the surface of the cylinder, and among other parts at the point of contact of the strip or arm therewith. The receipt of an oral communication takes place under the following conditions, viz.:—The crank handle t^1 is turned by hand in either direction at pleasure so as to impart rotary motion to the chalk cylinder, whereby the disc or tympan u is drawn forwards or thrust backwards according to the direction in which the cylinder is rotated. When now an undulatory current the result of the actuation of the tympan at the sending station, as hereinbefore described, traverses the tertiary circuit, a variable degree of lubricity, in accordance with the undulations of the current, is produced on the surface of the chalk, and the metal strip or arm is proportionately released, allowing the tympan to return towards its normal position. This action being continued so long as the cylinder is rotated and the current is passing, the tympan u is caused to vibrate in unison with the tympan of the transmitter at the sending station, and audible sounds are produced at x, corresponding to the vocal sounds which originally actuated the tympan of the transmitter at the sending station.

The several connections are clearly indicated in the drawing, the presence of a curve at the point of intersection of two lines denoting the wires represented, pass one behind the other, and are not connected with each other.

It is found in practice that when the receiver is placed in a tertiary circuit, by reason of the pressure of two continuous circuits, *videlicet* the primary and tertiary circuits, the full effect of the current from the distant station is not obtained upon the receiver a, portion of it passing from the secondary to the primary circuit. In order to obviate this defect a key is placed in the primary circuit, so arranged as to keep that circuit opened while the current from the distant station is acting upon the receiver, the said key being depressed for the purpose of closing the primary circuit when it is desired to actuate the transmitter. It has been found, however, that upon opening or closing this key a powerful inductive discharge is directed upon the receiver at the same station, which discharge has a deteriorating effect upon the surface of the chalk body of the receiver. This further defect has, however, obviated by opening the tertiary circuit prior to the closing of the primary circuit, and closing the tertiary circuit to leave it in condition to be acted upon by a current from the distant station immediately after the closing of the primary circuit, and also by opening the tertiary circuit prior to the opening of the primary circuit, and closing the tertiary circuit immediately thereafter. The conditions are fulfilled by the employment of a single key G, arranged in the manner shown in the figure 1 of the drawings, next hereinafter described.

The wire c^3 of the tertiary circuit c, and the wire a^3 of the primary circuit a, are permanently attached to the lever y of the key G, and the other wire (c^4) of the tertiary circuit is bifurcated, as shown at c^5 c^6, and the ends of these two lengths c^5 c^6 are provided with contact points 3, 4, placed one at each side of the lever y of the key G, but at such a distance therefrom as to admit of a third contact point 5, connected with the other wire (a^4) of the primary circuit a, being brought into contact with the lever of the key while it is passing from one to the other of the two contact points of the bifurcated tertiary wire. During the normal condition of the apparatus the keys G are in the position indicated in the drawing, the primary circuit being open, and the tertiary circuit being closed. When now it is required to send a communication from either station, the key G of that station is depressed so as to cause it to leave the contact point 3 of the bifurcated wire c^4, of the tertiary circuit c, and bring it into contact with the contact point 4 of the said wire.

By this movement the tertiary circuit is first opened, then the key being brought into contact with the contact point 5, the primary circuit is closed, and finally when the lever of the key arrives at the contact point 4, the tertiary circuit is closed, in readiness to be acted upon by a current from the distant station. When the key is released, in order to open the primary circuit, the lever of the key first leaves the contact 4, thus opening the tertiary circuit, then leaves the contact point 5, thus opening the primary circuit, and finally arrives at the point 3, thereby closing the tertiary circuit, and replacing it in a condition to be acted upon by a current from the distant station.

Before sending an oral communication, the call bell or sounder F at the distant station is actuated so as to notify that a communication is about to be sent. This result is obtained by the act of depressing the key H at the sending station, thus completing the secondary circuit whilst isolating the apparatus at the sending station, and exciting the relay E at the distant station; by the action of this relay the local circuit d is completed and the bell F is sounded, a notification being thus afforded that a communication is about to be sent. The key H is then released, and the key G is operated, and the sender speaks into the mouthpiece m of the transmitter A, and the speech is heard at the receiver B of the distant station, as hereinbefore explained.

I claim as my invention—

First—A carbon transmitter constructed as herein set forth, and having an adjusting screw passing through the tympan for the purpose of regulating the normal degree of intimacy of contact of the carbon button with the contiguous contact points or surfaces, substantially as hereinafter described.

Second—The combination with an induction coil, consisting of primary, secondary, and tertiary circuits of transmitter and battery in the primary circuit of the said coil, the said transmitter being so arranged as to vary the resistance of the circuit by varying the degree of intimacy of contact, points, or surfaces, and the whole being connected and operated, substantially as hereinbefore described.

Third—The employment of a tertiary coil having interposed in its circuit a receiver, consisting of a prepared chalk body, moved by power, and a metal strip or arm carried by a tympan, and maintained in contact with the prepared chalk body, the electric current passing through the latter and through the metal strip or arm, substantially as hereinbefore described.

Fourth—

Fourth—Constructing the frictional surface of the rotary body of the receiver of chalk, moistened with pure or distilled water, substantially as hereinbefore described.

Fifth—In a receiver constructed as herein set forth, the employment in contact with the surface of the moving chalk body of a metal strip or arm, tipped or faced with paladium, substantially as hereinbefore described.

Sixth—In a receiver constructed as herein set forth, the employment of an india-rubber spring or cushion for the purpose of maintaining the metal strip or arm with a yielding pressure in contact with the surface of the moving chalk body, substantially as hereinbefore described.

Seventh—The mode of controlling the opening and closing of the primary and tertiary circuits by the use of a single key, so arranged that the tertiary circuit shall be opened before the primary circuit is closed or opened, and shall be closed immediately afterwards, substantially as and for the purpose hereinbefore described.

Eighth—The general arrangement and combination of telephonic apparatus constructed and connected so as to operate substantially in the manner hereinbefore described, and illustrated in the accompanying drawings.

In witness whereof, I, the said Thomas Alva Edison, have to this my specification set my hand and seal, this thirtieth day of January, one thousand eight hundred and eighty.

THOMAS ALVA EDISON.

Signed and sealed by the said Thomas Alva Edison, in the presence of,—

STOCKTON L. GRIFFIN, Menlo Park, New Jersey, gentleman.
CHAS. T. HUGHES, Menlo Park, New Jersey, gentleman.
W. R. HOARE, Acting British Vice-Consul, New York.

This is the specification referred to in the annexed Letters of Registration granted to Thomas Alva Edison, this twenty-first day of June, A.D. 1880.

AUGUSTUS LOFTUS.

REPORT.

Sir, Sydney, 20 May, 1880.

We have the honor to report that we have carefully examined Mr. Thomas Alva Edison's application for Letters of Registration for certain improvements in the Telephone, and we see no objection to the application being granted.

We have, &c.,
E. C. CRACKNELL.
H. C. RUSSELL.

The Principal Under Secretary.

[Drawings—one sheet.]

Nos. 844 & 845.

[Assignments of No. 242A. See page 73 of Return of 21 June, 1872.]

FIG. 1.

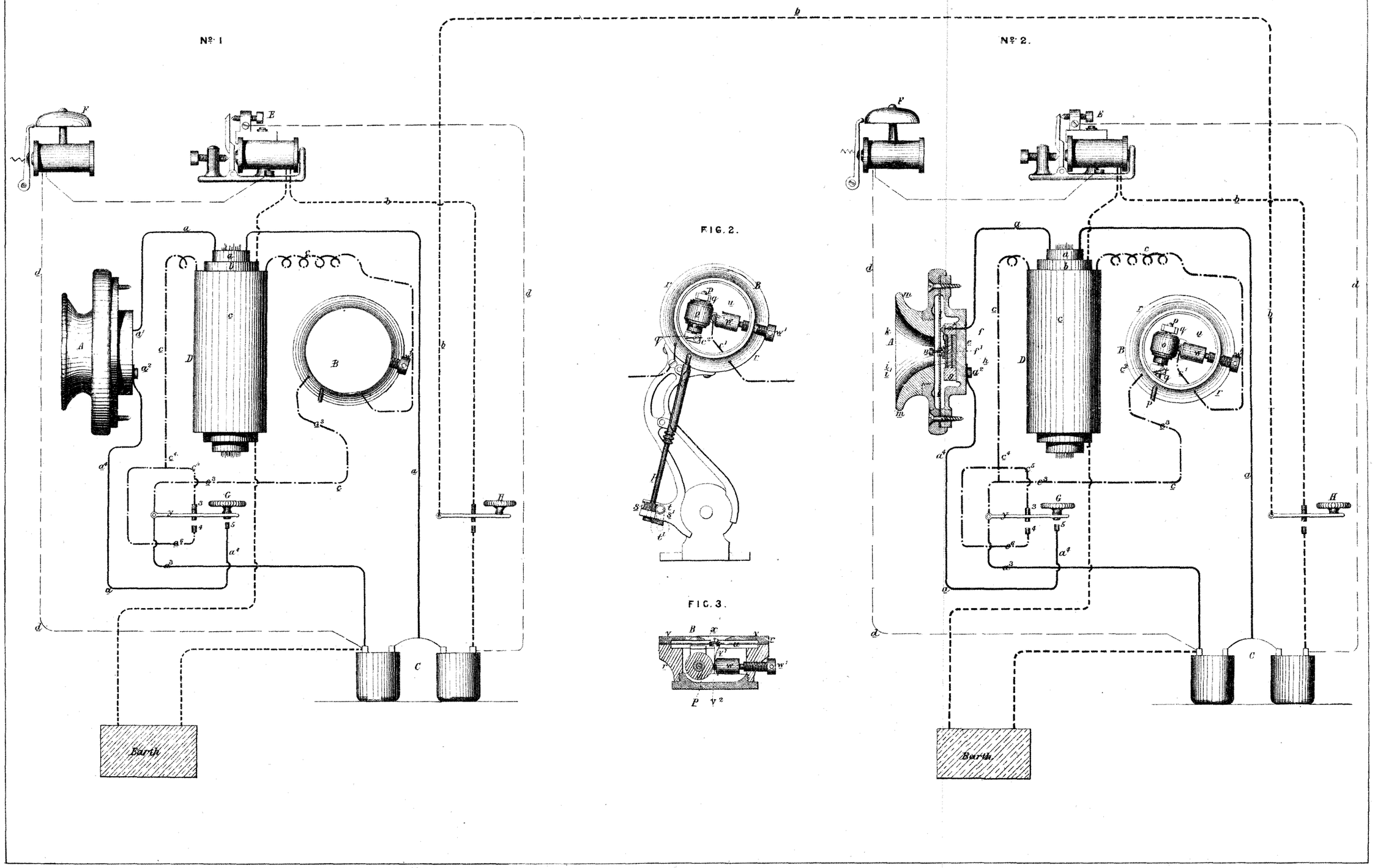

FIG. 2.

FIG. 3.

This is the Sheet of Drawings referred to in the annexed Letters of Registration granted to Thomas Alva Edison this twenty first day of June - - A.D. 1880.

(Sig: 357-)

"Augustus Loftus"

PHOTO-LITHOGRAPHED AT THE GOVT. PRINTING OFFICE, SYDNEY, NEW SOUTH WALES.

A.D. 1880, 25*th June*. No. 846.

SELF-ACTING TRAMWAY POINTS.

LETTERS OF REGISTRATION to George Trotter Evans, for Self-acting Tramway Points.

[Registered on the 25th day of June, 1880, in pursuance of the Act 16 Vic. No. 24.]

BY His Excellency the Right Honorable Sir Augustus William Frederick Spencer Loftus (commonly called Lord Augustus Loftus), Knight Grand Cross of the Most Honorable Order of the Bath, a Member of Her Majesty's Most Honorable Privy Council, Governor and Commander-in-Chief of the Colony of New South Wales and its Dependencies.

TO ALL TO WHOM THESE PRESENTS SHALL COME, greeting:

WHEREAS George Trotter Evans, of Sydney, in the Colony of New South Wales, hath by his Petition humbly represented to me that he is the author or designer of a certain invention or improvement in manufactures, that is to say, of an invention of "Self-acting Tramway Points," which is more particularly described in the specification and the sheet of drawings which are hereunto annexed; and that he, the said Petitioner, hath deposited with the Honorable the Treasurer of the said Colony of New South Wales the sum of Twenty Pounds sterling, for defraying the expense of granting these Letters of Registration, as required by the Act of Council, sixteenth Victoria, number twenty-four; and hath humbly prayed that I would be pleased to grant Letters of Registration, whereby the exclusive enjoyment and advantage of the said invention or improvement might be secured to him for a period of fourteen years: And I, being willing to give encouragement to all inventions and improvements in the arts or manufactures which may be for the public good, and having received a report favourable to the prayer of the said Petition, from competent persons appointed by me to examine and consider the matters stated therein and to report thereon for my information, am pleased, with the advice of the Executive Council, and in exercise of the power and authority given to me by the said Act of Council, to grant, and do by these Letters of Registration grant unto the said George Trotter Evans, his executors, administrators, and assigns, the exclusive enjoyment and advantage of the said invention or improvement, for and during the term of fourteen years from the date hereof; to have, hold, and exercise unto the said George Trotter Evans, his executors, administrators, and assigns, the exclusive enjoyment and advantage thereof, for and during and unto the full end and term of fourteen years from the date of these presents next and immediately ensuing, and fully to be complete and ended: Provided always, that if the said George Trotter Evans shall not, within three days after the granting of these Letters of Registration, register the same in the proper office in the Supreme Court, at Sydney, in the said Colony of New South Wales, then these Letters of Registration, and all advantages whatsoever hereby granted, shall cease and become void.

In witness whereof, I have hereunto set my sign manual, and have caused the present Letters of Registration to be sealed with the seal of the said Colony of New South Wales, at Government House, Sydney, in New South Wales, this twenty-fifth day of June, in the year of our Lord one thousand eight hundred and eighty.

[L.S.] AUGUSTUS LOFTUS.

A.D. 1880. No. 846.

Self-acting Tramway Points.

SPECIFICATION.

No. 1 represents a bird's-eye view of the points when in position, with lever box uncovered; the letters AA represent the two points, which are coupled together at one end by the deviating rod B, and are fastened to the bed-plate D, at the butt end by the screws CC, so as to admit of their working freely.

Letter E represents the lever box, to which is fitted a lid, the lid being arranged on hinges and made to fit close. F represents the lever, which is easily controlled by the hand, when requiring to alter the normal position of the points, or for the purpose of shunting, &c. The lever is made fast to the box E, at fulcrum G. To this lever is also attached the connecting link K, at the fulcrum H; this connecting link being made to move freely on the deviating rod B. The letters JJJJJJJJ represent eight indiarubber washers, by means of which the points are forced back to their place after the motor or car has passed through them when shunting.

The rubber washers are separated by thin iron washers, so as to strengthen the indiarubber when acted upon.

At both ends of the india-rubber washers are two fixed iron washers, I I, so that when the points are forced open, that portion of the india-rubber between the fixed washer I and the connecting link K will be compressed.

The letter L represents a deviating nut, by which to regulate the throw of the points; the letters DD represent two cast-iron bed-plates, which are made fast to the longitudinal sleepers by the counter-sunk bolts O; the letter P represents the rails as fixed to the bed-plate D.

No. 2 represents a transverse section of the points, showing the longitudinal and transverse sleepers and means of placing the points in the road.

No. 3 represents a perspective view of the box lid.

No. 4 represents a sectional view of the lid, showing the means of fastening it when shut. S represents a bolt, which is controlled by the ring T No. 3, the lid being recessed so as to admit of the ring to drop below the surface when the lid is fastened.

In connection with these points is a waterway running from under the lever box to the street sewer, for the purpose of carrying away the street refuse that might collect there during a storm.

GEORGE TROTTER EVANS.

Sydney, 16 February, 1880.

TO WHOM IT MAY CONCERN:

I claim as my invention a set of self-acting tramway points, which have for their virtues the following improvements:—

First—They are self-acting, and do not require the care of an attendant.

Second—They are so constructed as to have all parts below the street surface, thereby not interfering with the ordinary street traffic.

Third—They are simple in their construction, and there is little, if any, possibility of their getting out of order.

Fourth—They are so constructed as not to admit of the street refuse interfering with their good and proper working.

This is the specification referred to in the annexed Letters of Registration, granted to George Trotter Evans, this twenty-fifth day of June, A.D. 1880.

AUGUSTUS LOFTUS.

REPORT.

Sir,

Sydney, 2 June, 1880.

We do ourselves the honor to state that we see no objection to the issue of Letters of Registration for an invention of "Self-acting Tramway Points," in accordance with Mr. George Trotter Evans' Petition, specification, drawings, and claim, transmitted for our report under your blank cover communication of the 19th ultimo, No. 3,908.

We have, &c.,

GOTHER K. MANN.
JOHN WHITTON.

The Principal Under Secretary.

[Drawings—one sheet.]

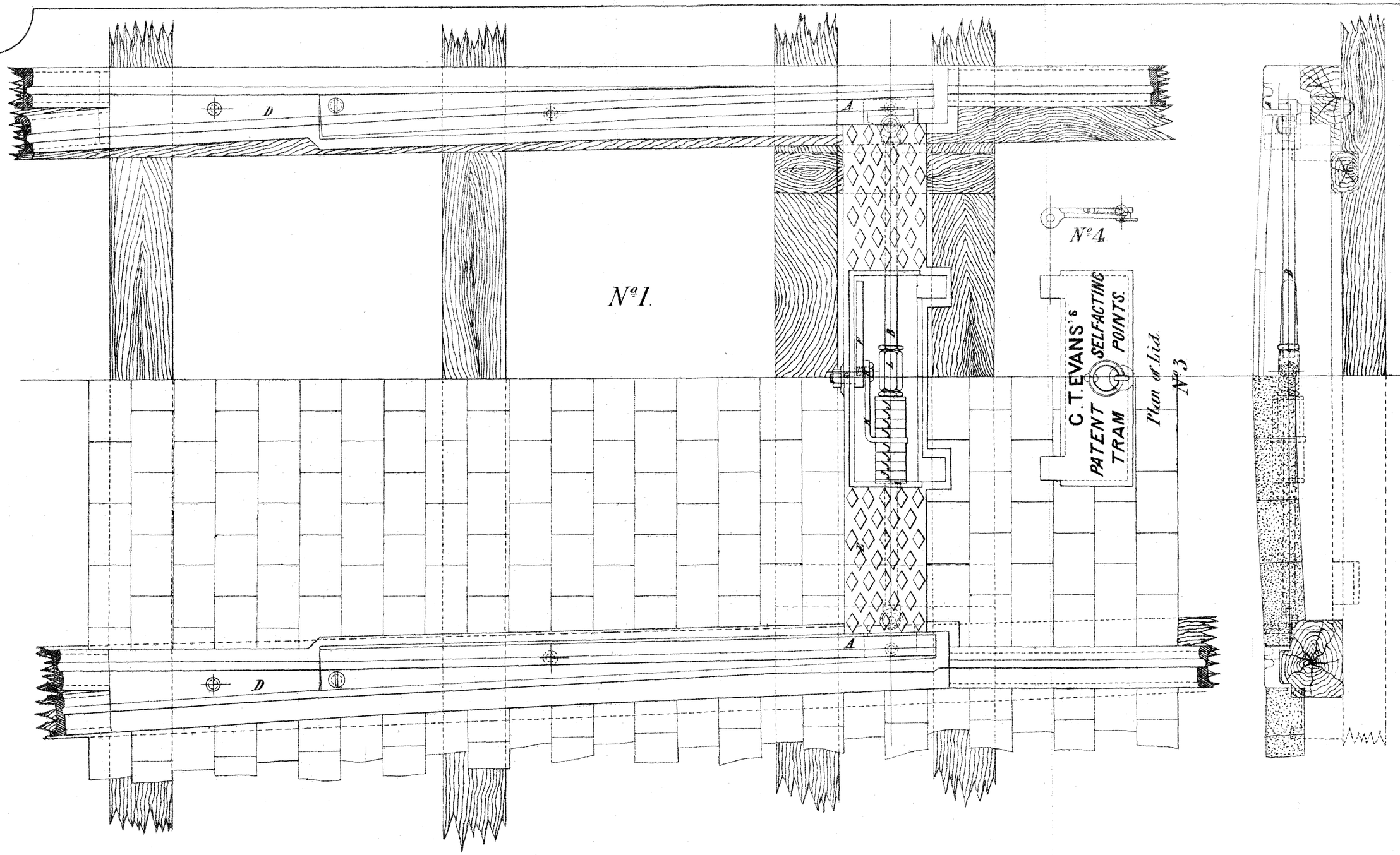

ARRANGEMENT OF PATENT TRAMWAY POINTS

This is the Sheet of Drawings referred to in the annexed Letters of Registration granted to George Trotter Evans, this twenty fifth day of June, A.D 1880.

Augustus Loftus.

Scale of Feet.

0 1 2 3 4 5 6

Sig. 357.

PHOTO-LITHOGRAPHED AT THE GOVT. PRINTING OFFICE,
SYDNEY, NEW SOUTH WALES.

A.D. 1880, 25*th June*. No. 847.

IMPROVEMENTS IN GAS-BURNERS.

LETTERS OF REGISTRATION to John Ellis, for Improvements in Gas-burners.

[Registered on the 26th day of June, 1880, in pursuance of the Act 16 Vic. No. 24.]

BY His Excellency the Right Honorable Sir Augustus William Frederick Spencer Loftus (commonly called Lord Augustus Loftus), Knight Grand Cross of the Most Honorable Order of the Bath, a Member of Her Majesty's Most Honorable Privy Council, Governor and Commander-in-Chief of the Colony of New South Wales and its Dependencies.

TO ALL TO WHOM THESE PRESENTS SHALL COME, greeting:

WHEREAS John Ellis, of Lynn, in the County of Essex, State of Massachusetts, United States of America, hath by his Petition humbly represented to me that he is the author or designer of a certain invention or improvement in manufactures, that is to say, of an invention of "Improvements in Gas-burners," which is more particularly described in the specification and the sheet of drawings which are hereunto annexed; and that he, the said Petitioner, hath deposited with the Honorable the Treasurer of the said Colony of New South Wales the sum of Twenty Pounds sterling, for defraying the expense of granting these Letters of Registration, as required by the Act of Council, sixteenth Victoria, number twenty-four; and hath humbly prayed that I would be pleased to grant Letters of Registration, whereby the exclusive enjoyment and advantage of the said invention or improvement might be secured to him for a period of fourteen years: And I, being willing to give encouragement to all inventions and improvements in the arts or manufactures which may be for the public good, and having received a report favourable to the prayer of the said Petition, from competent persons appointed by me to examine and consider the matters stated therein and to report thereon for my information, am pleased, with the advice of the Executive Council, and in exercise of the power and authority given to me by the said Act of Council, to grant, and do by these Letters of Registration grant unto the said John Ellis, his executors, administrators, and assigns, the exclusive enjoyment and advantage of the said invention or improvement, for and during the term of fourteen years from the date hereof; to have, hold, and exercise unto the said John Ellis, his executors, administrators, and assigns, the exclusive enjoyment and advantage thereof, for and during and unto the full end and term of fourteen years from the date of these presents next and immediately ensuing, and fully to be complete and ended: Provided always, that if the said John Ellis shall not, within three days after the granting of these Letters of Registration, register the same in the proper office in the Supreme Court, at Sydney, in the said Colony of New South Wales, then these Letters of Registration, and all advantages whatsoever hereby granted, shall cease and become void.

In witness whereof, I have hereunto set my sign manual, and have caused the present Letters of Registration to be sealed with the seal of the said Colony of New South Wales, at Government House, Sydney, in New South Wales, this twenty-fifth day of June, in the year of our Lord one thousand eight hundred and eighty.

[L.S.] AUGUSTUS LOFTUS.

SPECIFICATION.

A.D. 1880. No. 847.

Improvements in Gas-burners.

SPECIFICATION.

TO ALL WHOM IT MAY CONCERN: Be it known that I, JOHN ELLIS, of Lynn, in the County of Essex, State of Massachusetts, have invented certain "Improvements in Gas-burners," of which the following is a specification:—

THIS invention relates to certain improvements in gas-burners, which are provided with a cap forming a chamber over the orifice in the burner, said cap having apertures in it to make a communication from the chamber to another chamber on the outside of the latter, through and from which chamber the gas passes directly to the burner. This invention consists in providing the burner-base with an internal screw-threaded socket at its lower end for attaching it to the gas-pipe, and with a screw-threaded shank and a shoulder near its upper end for supporting the casing which forms the outer chamber, and with a shouldered upper end for supporting the inner chamber; said burner-base being also provided with a transverse regulating plug for cutting off the flow of gas; said screw and its seat being so constructed that the screw can be made to pass into its seat, so as to be flush with the external surface of the lower portion of the burner-base, whereby the ring or collar of a lamp-shade can be made to pass over such screw, which could not be effected if the ordinary stop-cock was employed, all of which will be fully hereinafter described.

In the drawings, figure 1 represents a vertical central section with the parts in position; figure 2, a cross-section on the line $x\ x$ of figure 1; and figure 3, a vertical section of the burner-base constructed according to my invention.

The burner-base B is provided with an internally screw-threaded socket a' for attaching it to the gas-pipe, and with a shoulder, b', and screw-threaded shank c' near its upper end, for receiving and supporting the casing F, which forms the outer chamber. The upper end of the burner-base B is provided with a reduced portion or stem, d, and a shoulder, e', for receiving and supporting the cap C, which forms the inner chamber. A screw-plug, d, passes transversely through the burner-base for cutting off the passage of the gas through the vertical passage a, formed in the burner-base. This plug may be either a screw-plug as above-mentioned to cut off the flow of gas by screwing it in or out, or it may be a plain plug having a passage, l, near its inner end in line with the passage a, in the burner-base, and by turning the plug half a revolution the opening through it will be out of coincidence with the passage a, and thus cut off the flow of gas. The gas in its passage from the gas-pipe passes up and through the orifice a, into the chamber D, where it impinges against the under side of the top m of the cap C, and being deflected downward, passes through inclined apertures c, in the wall of the cap c, when it enters the chamber H, and passes to the burner-tip G.

It will be noticed that the transverse plug d, when in position to cut off the flow of gas, is perfectly flush with the outside surface of the burner-base, whereby no obstruction is offered to the free passage of a ring or collar of a lamp-shade down over the burner-base, for resting upon the usual ring for supporting such shades, which will be located as usual at the bottom of the burner-base.

I claim as my invention—

The burner-base B of a gas-burner, constructed with the stem d', screw-thread c', and shoulder b' for receiving respectively the cap C and casing F, and provided with the transverse plug d, adapted to be forced within its seat to bring its head flush with the external surface of the burner-base, for the passage of the ring of a lamp-shade, all combined as herein shown for the purposes specified.

The above specification of my invention, signed by me this twenty-fifth day of May, A.D. 1880.

JOHN ELLIS,

By his Attorney,

J. B. CARTER.

This is the specification referred to in the annexed Letters of Registration granted to John Ellis, this twenty-fifth day of June, A.D. 1880.

AUGUSTUS LOFTUS.

REPORT.

Sir,

Sydney, 2 June, 1880.

The application of Mr. John Ellis for Letters of Registration for "Improvements in Gas-burners" having been referred to us, we have examined the specification and drawings accompanying the same, and have now the honor to report that we see no objection to the issue of Letters of Registration as prayed for.

We have, &c.,

J. SMITH.
E. C. CRACKNELL.

The Principal Under Secretary.

[Drawings—one sheet.]

J.ELLIS

GAS BURNERS

U.S

FIG. 1.

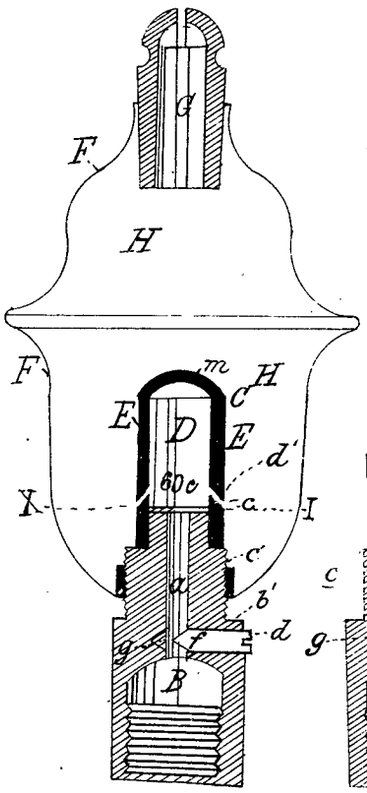

FIG.3.

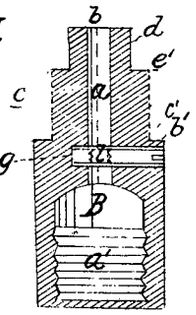

FIG.2.

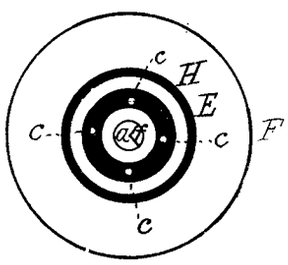

INVENTOR
John Ellis
by his attorney
J.B. Carter

This is the Sheet of Drawings referred to in the annexed Letters of Registration, granted to John Ellis, this twenty-fifth day of June, A.D. 1880.

Augustus Loftus.

A.D. 1880, 30*th June*. No. 848.

IMPROVED APPARATUS FOR SYNCHRONIZING CLOCKS, &c.

LETTERS OF REGISTRATION to Theodor Frederic Wiesener, for Improved Means or Apparatus for Synchronizing Clocks or other Timekeepers, and for transmitting seconds or other time or intermittent currents.

[Registered on the 1st day of July, 1880, in pursuance of the Act 16 Vic. No. 24.]

BY His Excellency the Right Honorable Sir Augustus William Frederick Spencer Loftus (commonly called Lord Augustus Loftus), Knight Grand Cross of the Most Honorable Order of the Bath, a Member of Her Majesty's Most Honorable Privy Council, Governor and Commander-in-Chief of the Colony of New South Wales and its Dependencies.

TO ALL TO WHOM THESE PRESENTS SHALL COME, greeting:

WHEREAS Theodor Frederic Wiesener, of Sydney, in the Colony of New South Wales, chronometer-maker, watchmaker, and jeweller, hath by his Petition humbly represented to me that he is the assignee of John Alexander Lund, of the firm of Barrand and Lund, of 41, Cornhill, in the City of London, in England, manufacturers, who is the author or designer of a certain invention or improvement in manufactures, that is to say, of an invention of "Improved Means or Apparatus for Synchronizing Clocks or other Timekeepers, and for transmitting seconds or other time or intermittent currents," which is more particularly described in the specification, marked A, and the three sheets of drawings, marked B, C, and D respectively, which are hereunto annexed; and that he, the said Petitioner, hath deposited with the Honorable the Treasurer of the said Colony of New South Wales the sum of Twenty Pounds sterling, for defraying the expense of granting these Letters of Registration, as required by the Act of Council, sixteenth Victoria, number twenty-four; and hath humbly prayed that I would he pleased to grant Letters of Registration, whereby the exclusive enjoyment and advantage of the said invention or improvement might be secured to him for a period of fourteen years: And I, being willing to give encouragement to all inventions and improvements in the arts or manufactures which may be for the public good, and having received a report favourable to the prayer of the said Petition, from competent persons appointed by me to examine and consider the matters stated therein and to report thereon for my information, am pleased, with the advice of the Executive Council, and in exercise of the power and authority given to me by the said Act of Council, to grant, and do by these Letters of Registration grant unto the said Theodor Frederic Wiesener, his executors, administrators, and assigns, the exclusive enjoyment and advantage of the said invention or improvement, for and during the term of fourteen years from the date hereof; to have, hold, and exercise unto the said Theodor Frederic Wiesener, his executors, administrators, and assigns, the exclusive enjoyment and advantage thereof, for and during and unto the full end and term of fourteen years from the date of these presents next and immediately ensuing, and fully to be complete and ended: Provided always, that if the said Theodor Frederic Wiesener shall not, within three days after the granting of these Letters of Registration, register the same in the proper office in the Supreme Court, at Sydney, in the said Colony of New South Wales, then these Letters of Registration, and all advantages whatsoever hereby granted, shall cease and become void.

In witness whereof, I have hereunto set my sign manual, and have caused the present Letters of Registration to be sealed with the seal of the said Colony of New South Wales, at Government House, Sydney, in New South Wales, this thirtieth day of June, in the year of our Lord one thousand eight hundred and eighty.

[L.S.] AUGUSTUS LOFTUS.

Improved Apparatus for Synchronizing Clocks, &c.

A.

TO ALL TO WHOM THESE PRESENTS SHALL COME: I, THEODOR FREDERIC WIESENER, of Sydney, in the Colony of New South Wales, chronometer-maker, watchmaker, and jeweller, send greeting:

WHEREAS I am desirous, as assignee of John Alexander Lund, of the firm of Barrand and Lund, of 41, Cornhill, in the City of London, in England, manufacturers, to obtain Letters of Registration for securing unto me Her Majesty's special license, that I, my executors, administrators, and assigns, and such others as I or they shall at any time agree with, and no others, shall and lawfully may from time to time, and at all times during the term of fourteen years, to be computed from the day on which this instrument is left at the office of the Colonial Secretary, Sydney, make and exercise, use and vend within the Colony of New South Wales, an invention for "Improved means or apparatus for Synchronizing Clocks or other Timekeepers, and for transmitting seconds or other time or intermittent currents," as more particularly described and shown in the accompanying plans and specification:—

SPECIFICATION.

THE object of the first part of the said invention is to enable any number of clocks or other timekeepers in the same establishment or in different establishments to be automatically synchronized without interfering with the pendulum, or with the clock movement or any other part of the works of the timekeepers. This part of the invention consists in setting or synchronizing the hands electrically. For this purpose I take any timekeeper which can be depended upon to keep correct time, and I connect this normal or primary timekeeper electrically in a manner well understood with all the other clocks or timekeepers to be synchronized.

One mode in which I carry out the invention is as follows:—I fit each of these other clocks with an electro-magnet, the armature of which is carried by a weighted arm, the weight keeping the armature raised clear of the magnet. The end of this arm is forked, and the fork takes into slots in a pair of levers which carry pins passing through the dial at points equidistant from the zero point. The two points through which the pins pass are connected by a curved slot in the dial. At the expiration of every hour, the electric circuit from the battery being completed by the movement of the normal clock, the armature at each of the other clocks is attracted to its magnet, and the fork on the armature arm is thereby caused to act upon the pair of levers and draw them together, as well as the pins which pass through the dial, these pins then meeting at zero on the dial. The result of this movement is that should the minute-hand of the clock not be exactly at zero the pins act upon it, or upon a block thereon, and set it to zero; all the clocks connected electrically with the normal clock are thus synchronized every hour. When the electric circuit is broken the weight returns the parts to their normal position.

The manner just described of carrying the said invention into effect will be fully understood by sheet 1 of the annexed drawings.

Figure 1 is a front view; figure 2, a transverse section; and figure 3, a plan of the dial of a clock with the invention applied thereto.

Figure 4 is a front view, and figure 5 a plan of the pair of levers hereinbefore described in their normal position.

Figure 6 is a front view, and figure 7 a side view of the same levers in the position they occupy when acted upon by the electric current.

a is the case, and *b* the dial of the clock; *c* is the hour-hand, and *d* the minute-hand; *e e* are a pair of electro-magnets connected by wires, *f f*, with the primary or normal clock in the manner well understood; *g* is the armature of the magnet *e*; it is carried by an arm, *h*, which is centred at *i* and carries a weight, *j*, which keeps it raised clear of the magnets; the front end of the arm *h* is forked, and the prongs *k k* of the fork take into slots *e e*, in a pair of levers *m m*, which are centred at *n n*, and carry pins *o o*. These pins pass through the dial at the two ends respectively of a slot, *p*; *q* is a block at the back of the hand *d*.

The action is as follows:—At the expiration of every hour, the electric circuit from the battery being completed by the movement of the normal clock, the armature *g* is attracted by the magnets *e* overcoming the power of the weight *j* and thereby giving a downward movement to the fork *k*. The fork *k* acting in its downward movement upon the levers *m m*, moves them from the position shown in figure 4 to that shown in figure 6, as well as in figures 1, 2, and 3, so that the pins *o* are drawn together. Thus, if the minute-hand *d* is not exactly at zero, the pins acting upon the block *q* set it to zero; the electric circuit being then broken at the normal clock, the weight *j* returns the parts to their normal position.

Figure 8 (sheet 2) is a side elevation, and figure 9 a plan of a modified arrangement. Here the armature *g* is hung on horizontal pivots or centres *i i*, and carries a vertical fork or prongs *k k*, which take into slots *l l*, in the tails of the pins *o o*. These pins are centred at *u u*, and pass through a slot in the dial as in the arrangement represented in sheet 1; *j* is a spring connected to the armature *g* so as to keep it clear of the magnets *e*, the pins *o o* being then in the position seen in the full lines in figure 9; but when at the expiration of every hour the circuit from the battery is completed by the movement of the normal clock, the armature *g* is attracted by the magnets and thus causes the prongs *k k* to move inwards; the prongs in this motion acting in the slots *l l*, move the pins *o* into the position shown in dotted lines, so that the hands of the clock to which the apparatus is connected are set to zero.

It will readily be understood that the mechanism hereinbefore described, which connects the armature *g* with the pins *o* or analogous devices for acting upon the minute-hand may be modified in various ways, but I have found the arrangements above described to answer well.

If it be desired to avoid making the slot *p* in the dial I use a false hand behind the dial on the same centre as and moving with the hand *d*. Instead of acting upon the hands every hour as hereinbefore described, they may be acted upon at any other desired time; for instance, there may be another pair of the pins *o o* at the half-hour of the dial worked from the same electro-magnet, and in this case the clock would be set or synchronized by a current sent every half-hour.

Figures 10, 11, and 12 (sheet 3) represent a modification of the said invention suitable for turret and other large clockwork, in which the setting of the hands would be effected, not immediately by the electric current itself, but by an intermittent weight discharged by the electric current; *a* represents a false minute-hand at the back of the dial, or if more convenient the counterpoise of the minute-hand may be used, or the

hand

hand on the set dial might with equal convenience be utilised if suitably prolonged, in fact the said false hand a' can be placed upon any such part of the clockwork as might most conveniently control the hand work; b is a lever substantially corresponding with the lever h, in figures 2 and 3; c is substantially the same as one of the levers m m, in figures 2 to 7; d d^1 are substantially the same as the pins o o, in the levers m m, in the figures just mentioned; the pin d^1 is cut back as shown in the drawing, to its semi-diameter, in order that the hand a may proceed upon its way immediately after the discharge of the electric current; e is a weight affixed to the lever b. To this lever is fixed an arm, j, which carries the pin d^1, and in the said lever is a slot, k, in which works the other pin d on the lever c. The lever c is centred at the fixed point d'; the weighted lever b and parts connected therewith can be raised by any convenient means, say by the clock itself between five minutes past the hour and five minutes to the hour, supposing the electric current to be sent hourly; f is a flange riveted to the under side of the false hand a, commencing level with the bottom of the hand, and terminating at such a point as would free the pin d in the arm c as the hand was coming round to the succeeding hour.

The action is as follows:—The lever rests at the hour upon the detent g ready to be discharged on the arrival of the electric current from the normal clock, which discharge may be effected by any well-known method. Upon the arrival of the electric current, the detent g being made to revolve slightly on its axis liberates the lever b which is instantly caused by the weight e to descend to the stop h. This stop h must be so arranged that when the lever b is depressed and the weight resting upon its stop, the end of the hand a must be just safely free of the semi-diameter of the pin d'.

In its passage the lever b carries down the lever c, carrying the pin d and also the other pin d' affixed to the arm j. Should the clock be (say) one minute or any portion of a minute slow, and therefore the hand a in the position represented, for example at a^1, the pin d on the lever c will act upon the flange f on the false hand a, and in its passage force the hand a to its central or true time position. Should, on the other hand, the clock be one minute or any portion of a minute fast, and therefore the hand a in the position represented, for example at a^2, the pin d' on the arm j acting upon the edge of the hand a will bring the said hand back to its central or true position.

Another part of the said invention relates to means of transmitting seconds currents or other time or intermittent currents from a normal or primary clock or timekeeper, and it enables me to use a known and unvarying resistance instead of the springs and other means hitherto employed for this purpose. I fix to either of the clock plates a wheel of ebonite or other insulating material concentric with the escapement wheel; I divide the periphery of this wheel into 120 equal parts when intended for seconds currents, and in each alternate part I fix teeth or pieces of metal, exactly fitting in between the other or ebonite parts. These metal pieces are all connected with a metal ring, which in its turn is connected with one pole of the battery, the other pole of the battery being connected with the plates of the clock. Upon the arbour of the escapement pinion I fix a metal brush or metal rubber which, as the pinion revolves, travels over the periphery of the ebonite wheel. Each time it comes in contact with one of the metal pieces, that is to say, every second, it makes electric contact and transmits the current, while each time it comes in contact with an ebonite piece the electric contact is broken. When the current is required to be alternately positive and negative I use two ebonite and metal wheels instead of one, and separate them by any suitable non-conducting such as ebonite or talc.

Where instead of seconds currents it is required to transmit other time or intermittent currents at regular or varying intervals, the arrangement of the ebonite and metal pieces in the wheel will be varied accordingly.

The means hereinbefore described of transmitting time currents will be fully understood on reference to figures 13 and 14 (sheet 2), which are respectively a front elevation and a side elevation partly in section; a is one of the clock plates; b, the escapement wheel; c, the escapement pinion; and d, the arbour of the same; e is a wheel of ebonite or other insulating material fixed to the plate a, and concentric with the wheel b. The inner periphery of the wheel e is shown divided into sixty equal parts, the number required for transmitting a current every alternate second. Every alternate part x of the periphery is of brass or other metal, while the other parts y are of ebonite. The metal parts x are all connected with a metal ring f, which in its turn is connected with one pole of the battery, the other pole being connected with the plates of the clock, as has already been stated; g is a metal brush on the arbour d, and travelling over the periphery of the wheel e. It will be readily understood that every time this brush comes in contact with one of the metal parts x, that is to say, every second or alternate second (or such intervals of seconds as may have been arranged for) it makes electric contact and transmits the current, while every time it comes in contact with one of the ebonite pieces y the electric contact is broken.

And having now described the nature of the said invention and in what manner the same is to be performed, I declare that I claim—

1st—Synchronizing clocks or other timekeepers, by acting upon the minute-hand at every hour or other stated time, substantially as hereinbefore described.

2nd—Constructing or arranging mechanism, substantially as hereinbefore described, and represented respectively in figures 1 to 7, figures 8 and 9, and figures 10, 11, and 12 of the accompanying drawings, for acting upon the minute-hands of clocks or other timekeepers for the purpose of synchronizing the same.

3rd—The means or apparatus, substantially as hereinbefore described, and represented in figures 13 and 14 of the accompanying drawings, for transmitting seconds or other time or intermittent currents.

In witness whereof, I, the said Theodor Frederic Wiesener, have hereunto set my hand, this sixth day of October, one thousand eight hundred and seventy-nine. T. F. WIESENER.

This is the specification, marked A, referred to in the annexed Letters of Registration granted to Theodor Frederic Wiesener, this thirtieth day of June, A.D. 1880.

AUGUSTUS LOFTUS.

Improved Apparatus for Synchronizing Clocks, &c.

REPORTS.

Sir, Sydney, 24 October, 1879.

We have carefully considered the application for Letters of Registration from Mr. Theodor Frederic Wiesener for an Improved Apparatus for Synchronizing Clocks, and find that a similar arrangement has been in use at the Sydney Observatory for the last four years; we therefore cannot recommend that the Petitioner's application be granted.

We have, &c.,
E. C. CRACKNELL.
A. TORNAGHI.

The Principal Under Secretary.

Sir, Sydney, 22 March, 1880.

We have the honor to inform you that after careful consideration we are of opinion that, in consequence of a similar arrangement designed by Mr. H. C. Russell and in use at the Sydney Observatory since the early part of 1876 for synchronizing clocks which is more simple than that applied for by Mr. Wiesener, we do not consider that Letters of Registration should be granted in this case.

We have, &c.,
A. TORNAGHI.
E. C. CRACKNELL.
H. C. RUSSELL.

The Principal Under Secretary.

Sir, Sydney, 5 June, 1880.

In obedience to your request that we should meet and report upon "An application from Mr. T. F. Wiesener for reconsideration of his Petition for Letters of Registration for an Improved Apparatus for Synchronizing Clocks," we have carefully considered the case as presented in the papers submitted to us, and have now the honor to report thereon as follows :—

The decision to be arrived at must depend on the amount of similarity between Lund's invention, assigned to Wiesener, and that of Mr. H. C. Russell. If the inventions are identical, it would have to be considered as a legal question whether the previous publication of Mr. Russell's should not be held to bar Mr. Wiesener's claim.

If the inventions are not identical, the question arises—is the dissimilarity of sufficient amount as to warrant the granting of Wiesener's petition. Here we must acknowledge that there is room for doubt. The object of the two inventions is the same, namely, to bring the minute-hand of a clock to an exact zero point at the end of every hour.

The mode of effecting this object is to a certain extent the same, inasmuch as in each case a current of electricity to actuate an electro-magnet is sent at the end of every hour to the regulated clock, by means of a normal clock; but beyond this the inventions are not identical, for the mechanism put in motion by the current and electro-magnet for the purpose of bringing the minute-hand to zero is quite different in the two cases. We consider that the mechanism invented by Mr. Russell is simpler than Lund's, and ought to be equally effective, but that does not affect the present question. The mechanism of Lund's invention is different from Russell's, and on the whole we consider the difference to be sufficient to warrant protection by Letters of Registration. The granting of such protection to Mr. Wiesener would not be a bar to granting similar protection to Mr. Russell, if he should see fit to apply for it.

We consider that the specification before us does not claim specially the synchronizing of clocks by bringing the minute-hand to a zero point by means of an electro-magnet, for if that were the claim made we think it ought not to be allowed, and we understand that the former Board that reported on this case rejected the application on the ground that such was really claimed; but in our view the claim is simply for the particular mechanism to bring about that result.

Holding this view as correct, we think there is no objection to the granting of Letters of Registration for the apparatus substantially as described and figured.

We have, &c.,
CHAS. WATT.
E. C. CRACKNELL

The Principal Under Secretary.

[Drawings—three sheets.]

3 Sheets.
Sheet 1.

Fig. 1.

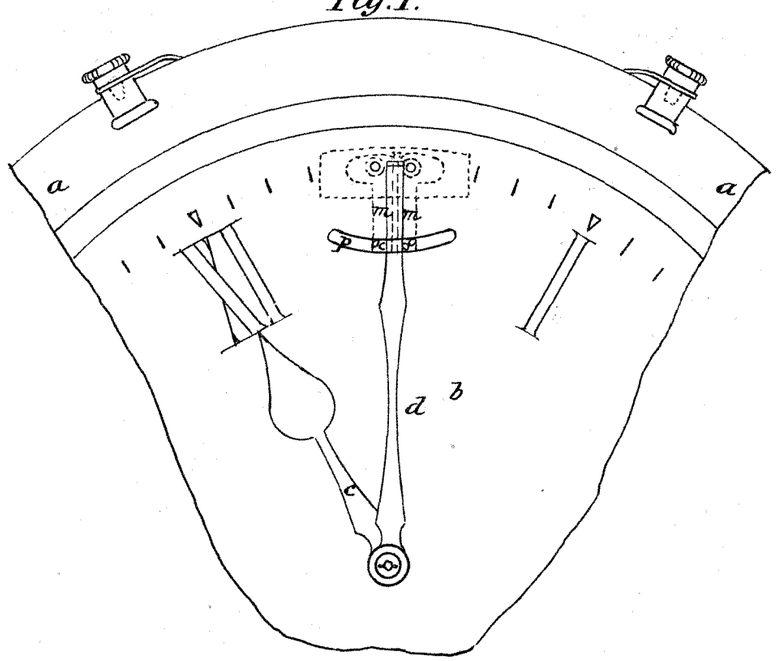

Fig. 2.

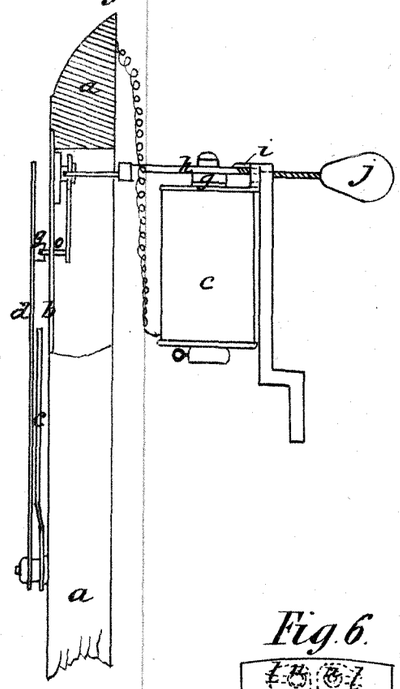

Fig. 3.

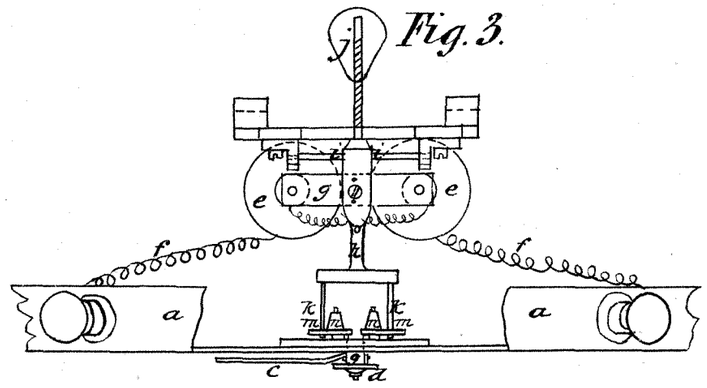

Fig. 6.

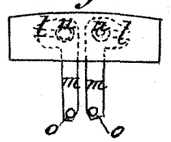

Fig. 7.

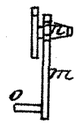

Fig. 5.



Fig. 4.

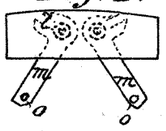

This is the Sheet of Drawings marked B. referred to in the annexed Letters of Registration granted to Theodor Frederic Wiesener, this thirtieth day of June A.D. 1880.

Augustus Loftus.

3 Sheets
Sheet 2.

Fig. 8.

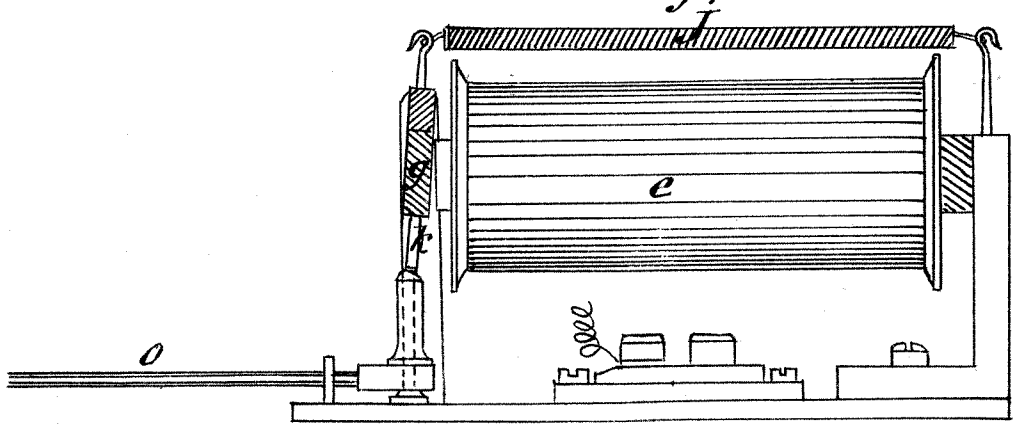

Fig. 9.

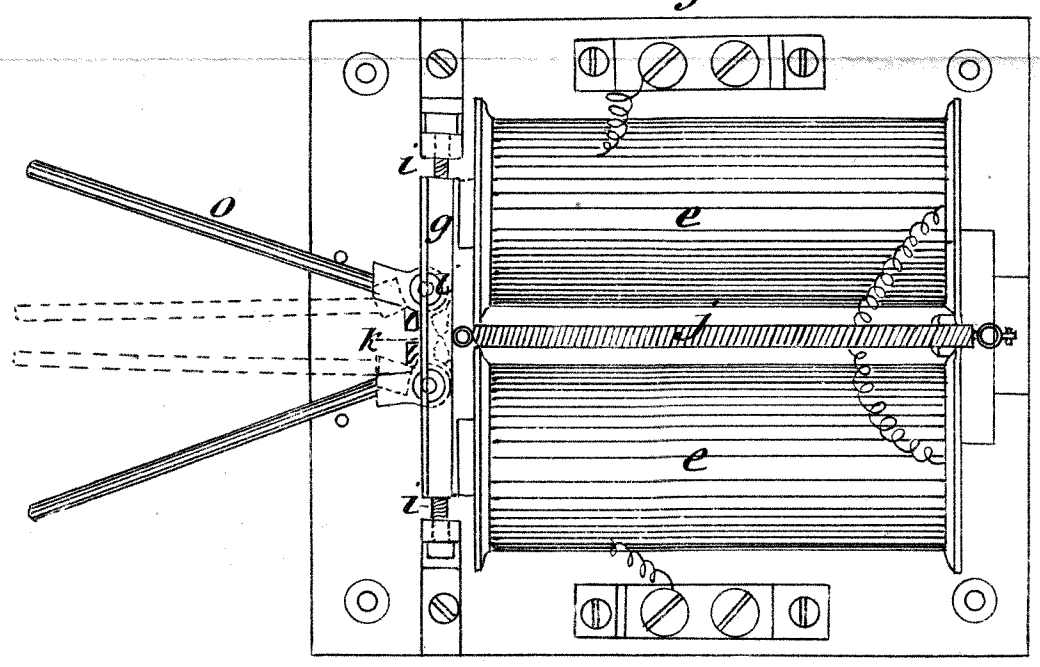

Fig. 13.

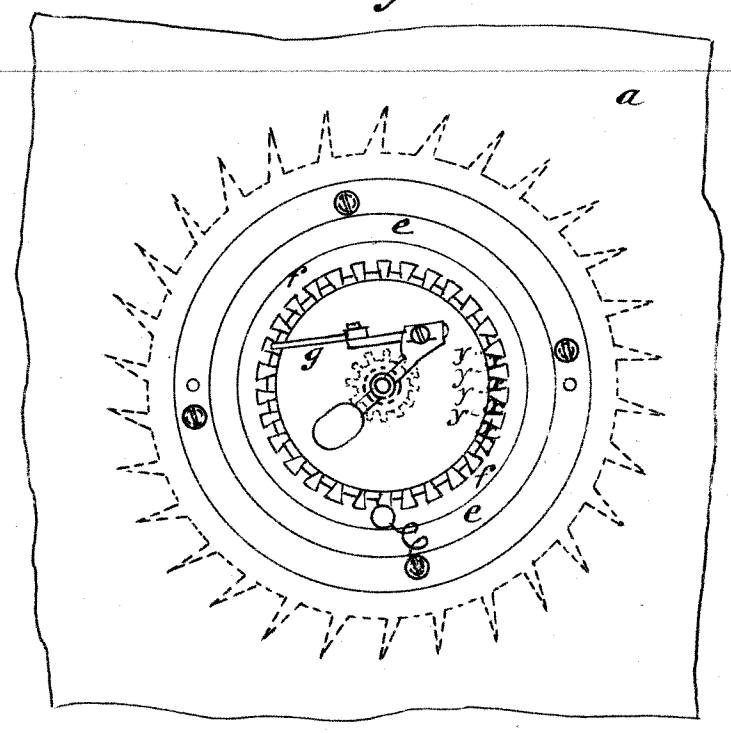

Fig. 14.

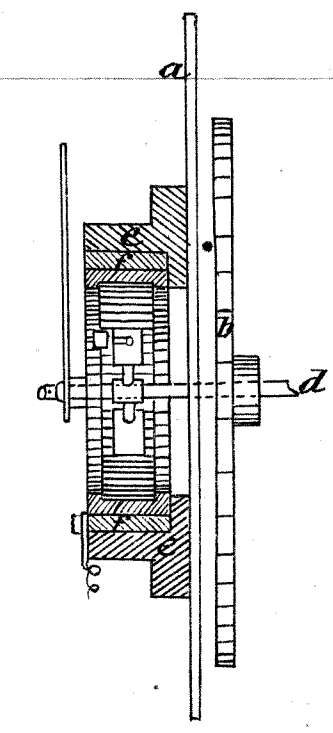

This is the Sheet of Drawings marked C. referred to in the annexed Letters of Registration granted to Theodor Frederic Wiesener, this thirtieth day of June A.D. 1880.

Augustus Loftus.

(Sig. 357-)

D.

848.

(3. Sheets
Sheet 3.)

Fig. 10.

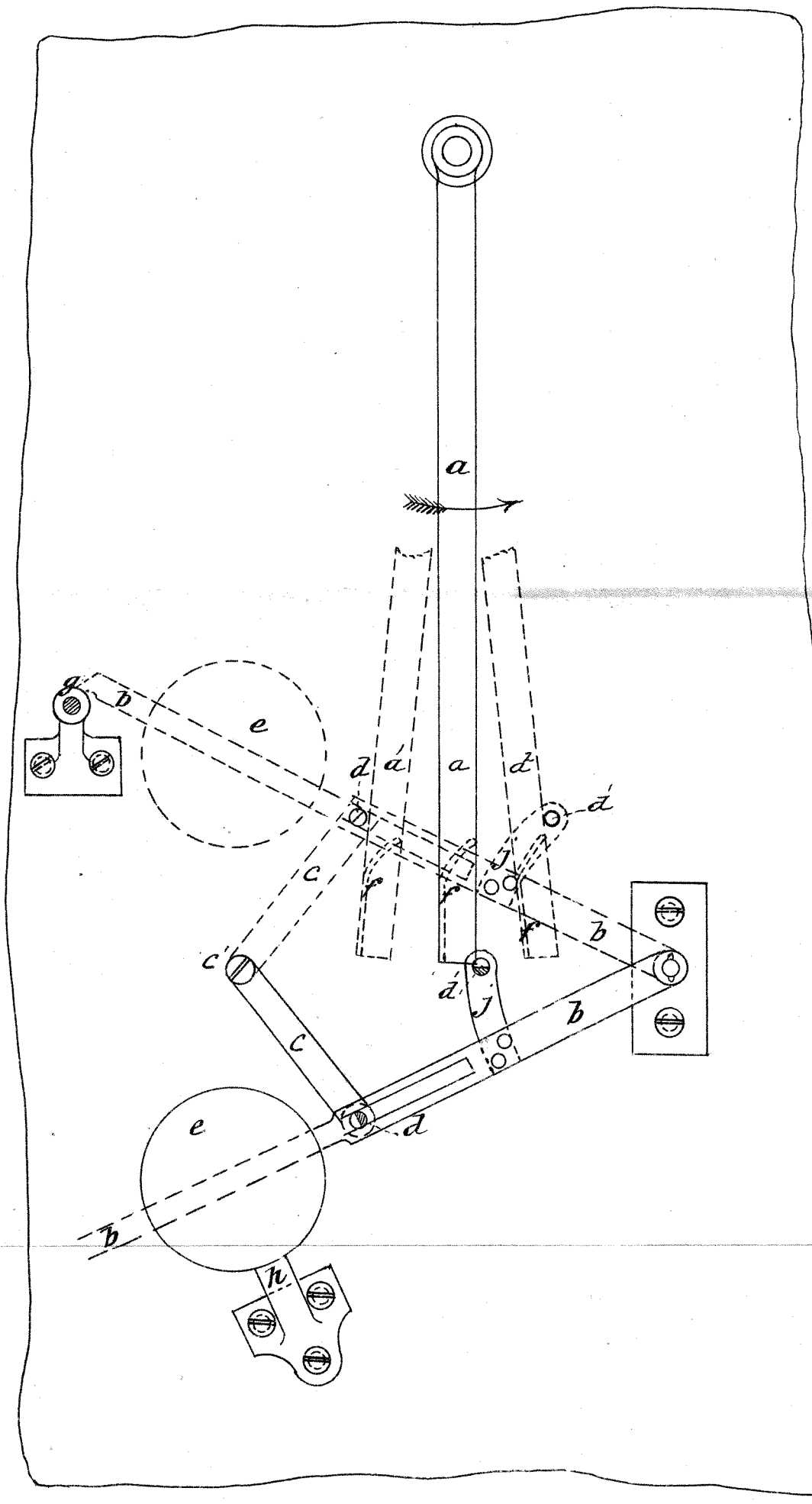

Fig. 12.

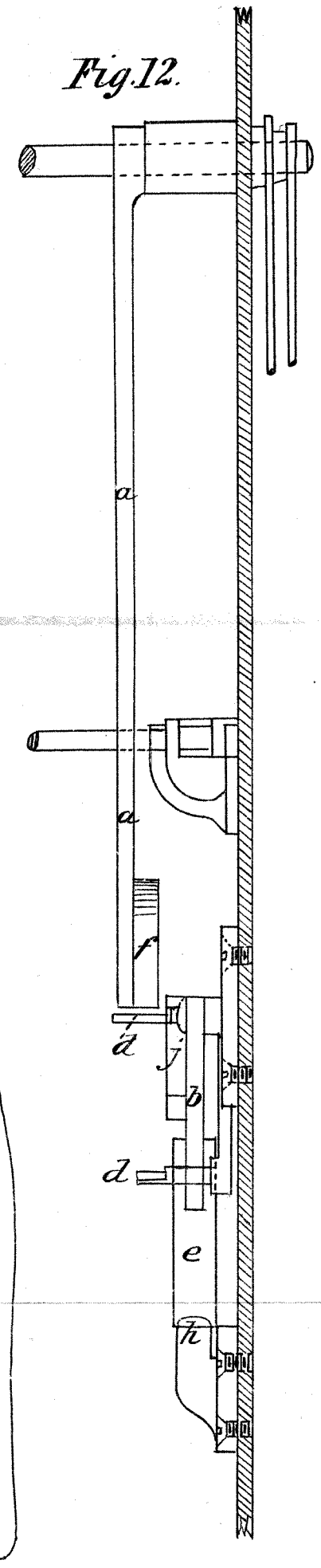

Fig. 11.

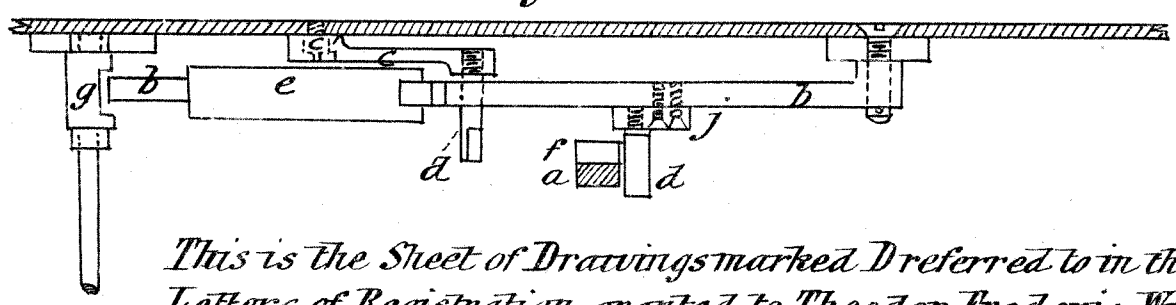

This is the Sheet of Drawings marked D referred to in the annexed Letters of Registration granted to Theodor Frederic Wiesener this thirtieth day of June A.D. 1880.

Augustus Loftus.

(Sig. 357.)

A.D. 1880, 30*th June.* No. 849.

IMPROVEMENTS IN LOCOMOTIVE, MARINE, AND OTHER STEAM BOILERS.

LETTERS OF REGISTRATION to James Wavish, for Improvements in or applicable to Locomotive, Marine, and other Steam Boilers, for the purpose of promoting the combustion of fuel and obtaining increased evaporating power.

[Registered on the 1st day of July, 1880, in pursuance of the Act 16 Vic. No. 24.]

BY His Excellency the Right Honorable Sir Augustus William Frederick Spencer Loftus (commonly called Lord Augustus Loftus), Knight Grand Cross of the Most Honorable Order of the Bath, a Member of Her Majesty's Most Honorable Privy Council, Governor and Commander-in-Chief of the Colony of New South Wales and its Dependencies.

TO ALL TO WHOM THESE PRESENTS SHALL COME, greeting:

WHEREAS James Wavish, of Leytonstone, in the County of Essex, in the Kingdom of England, hath by his Petition humbly represented to me that he is the author or designer of a certain invention or improvement in manufactures, that is to say, of an invention of "Improvements in or applicable to Locomotive, Marine, and other Steam Boilers, for the purpose of promoting the combustion of fuel and obtaining increased evaporating power," which is more particularly described in the specification and the sheet of drawings which are hereunto annexed; and that he, the said Petitioner, hath deposited with the Honorable the Treasurer of the said Colony of New South Wales the sum of Twenty Pounds sterling, for defraying the expense of granting these Letters of Registration, as required by the Act of Council, sixteenth Victoria, number twenty-four; and hath humbly prayed that I would be pleased to grant Letters of Registration, whereby the exclusive enjoyment and advantage of the said invention or improvement might be secured to him for a period of fourteen years: And I, being willing to give encouragement to all inventions and improvements in the arts or manufactures which may be for the public good, and having received a report favourable to the prayer of the said Petition, from competent persons appointed by me to examine and consider the matters stated therein, and to report thereon for my information, am pleased, with the advice of the Executive Council, and in exercise of the power and authority given to me by the said Act of Council, to grant, and do by these Letters of Registration grant unto the said James Wavish, his executors, administrators, and assigns, the exclusive enjoyment and advantage of the said invention or improvement, for and during the term of fourteen years from the date hereof; to have, hold, and exercise unto the said James Wavish, his executors, administrators, and assigns, the exclusive enjoyment and advantage thereof, for and during and unto the full end and term of fourteen years from the date of these presents next and immediately ensuing, and fully to be complete and ended: Provided always, that if the said James Wavish shall not, within three days after the granting of these Letters of Registration, register the same in the proper office in the Supreme Court, at Sydney, in the said Colony of New South Wales, then these Letters of Registration, and all advantages whatsoever hereby granted, shall cease and become void.

In witness whereof, I have hereunto set my sign manual, and have caused the present Letters of Registration to be sealed with the seal of the said Colony of New South Wales, at Government House, Sydney, in New South Wales, this thirtieth day of June, in the year of our Lord one thousand eight hundred and eighty.

[L.S.] AUGUSTUS LOFTUS.

Improvements in Locomotive, Marine, and other Steam Boilers.

SPECIFICATION of JAMES WAVISH, of Leytonstone, in the County of Essex, for Improvements in or applicable to Locomotive, Marine, and other Steam Boilers, for the purpose of promoting the combustion of fuel and obtaining increased evaporating power.

MY invention relates to the apparatus for facilitating the proper combustion of fuel, constructed upon what is known as Wavish's system.

In applying the said apparatus to steam-boilers it has been customary to construct it in the form of a series of vertical bars which surround an elongated opening in a plate constituting the bottom of the grate, and are surmounted by another plate which forms a cover to the chamber thus constituted, a space being left between each two consecutive bars so as to form outlets into and among the fuel for the air introduced through the said opening.

It has been found in practice that the said cover becomes rapidly deteriorated and destroyed under the action of the heat to which it is subjected, and requires frequent renewal.

Now my present invention has for its object counteracting this tendency to rapid deterioration of the cover, and at the same time increasing the evaporating power of the boiler; and it consists for that purpose in constructing the cover hollow, and connecting it with the water space in the boiler in such a manner that the water shall be caused to enter and fill and constantly circulate through the cover, thus protecting it from injury from the action of the heat at its exterior, and also contributing to the available heating surface of the boiler.

My present invention is particularly adapted for use in locomotive and marine steam boilers, but it is also applicable to steam boilers of other descriptions.

And in order that my said invention may be fully understood, I shall now proceed more particularly to describe the same, and for that purpose shall refer to the several figures on the annexed sheet of drawings, the same letters of reference indicating corresponding parts in all the figures.

Figure 1 of my drawings represents a half end elevation and half transverse vertical section of a portion of a marine boiler, having applied thereto the improvements which form the subject of my said invention. Figure 2 is a longitudinal section, and figure 3 a horizontal section of the same, both corresponding to figure 1. Figures 4, 5, and 6 illustrate the application of my said invention to a Cornish boiler, figure 4 being a half end elevation and half transverse vertical section of the boiler, figure 5 a longitudinal section of a portion of the same, and figure 6 a detail of one of the water chambers hereinbefore referred to, and hereinafter more fully described.

Referring to figures 1, 2, and 3, A is the shell of a marine boiler, B B are the fire-boxes, C the smoke boxes, D the fire-tubes, and E the chimneys, all of which may be generally arranged in any usual or suitable manner. F are the grates, which are constructed upon the principle of what is known as Wavish's system. Each consist of vertical bars, *a*, arranged at opposite sides of an elongated opening *b* in a plate, *c*, constituting the bottom of the grate. The bars are secured together and to end plates *d d* by bolts, *e*, and are surmounted by a cover so as to form a chamber *f*, into which the air for supporting combustion is introduced through the opening *b*, the said air thence passing through spaces a^1 left between the bars into and among the burning fuel in the grate. Now my present invention relates chiefly to the construction and arrangement of the covers surmounting the said bars, and consists in constructing them hollow, so as to form water spaces or chambers, as shown at G, and connecting them with the water space in the boiler, in order to maintain a circulation of water through the boiler and the said chambers. The connection of the chambers G with the boiler water space may be made in various ways. In the example illustrated in figures 1, 2, and 3, a pipe *g* at the fire-door end of each chamber G is carried upwards into the upper part of the boiler water space, and another pipe g^1 at the opposite end is passed through the fire-bridge H, and extended downwards into the lower part of the boiler water space. The water is thus caused to enter and fill and constantly circulate through the chambers or hollow covers G, thereby protecting them from injury from the action of the external heat, and at the same time contributing to the available heating surface of the boiler, and equalising the expansion of the boiler-plates.

In carrying out my present invention, and in particular in the application of the same to marine boilers, it is found advantageous to close the ash-pits at *h*, thus forming air chambers, I, and to supply air thereto for the purpose of supporting combustion by means of pipes *i* and a fan or blower from the external atmosphere, in lieu of the necessary air being drawn from the stokehole as in the ordinary manner.

I make no claim, however, to the use of closed ash-pits and a forced draught as forming any part of my present invention.

Figures 4, 5, and 6 illustrate the application of my invention to a double-flued Cornish boiler, B B being the flues containing the grates F constructed in the manner hereinbefore described.

In this example the pipes $g\,g^1$ communicating respectively with the upper and lower parts of the boiler water space are carried out at the front of the boiler, and a partition *k* (see detail figure 6) having an aperture k^1 is provided in each of the water chambers G, in order to further promote the circulation of the water throughout the extent of the said chambers.

Although, however, I have shown different arrangements of the pipes $g\,g^1$ in the examples of marine boiler and Cornish boiler illustrated, I wish it to be understood that the said arrangements of pipes may be used indiscriminately for either type of boiler; also that the partition in the water chambers may be used or omitted in either arrangement; and further, that the pipes and chambers may be otherwise modified according to circumstances.

By means of my present invention the advantages of my system in facilitating the proper combustion of fuel are retained, whilst at the same time the apparatus is rendered more durable, and an augmentation of the evaporating power of the boiler and an equalisation in the expansion of the boiler-plates are secured.

Having

Improvements in Locomotive, Marine, and other Steam Boilers.

Having now described and particularly ascertained the nature of my said invention and the manner in which the same is or may be used or carried into effect, I would observe in conclusion that what I consider to be novel and original, and therefore claim as the invention is—

In steam boilers the combination with fire-grates, constructed as herein set forth, of water chambers or spaces communicating with the water space of the boiler, and arranged in relation to the said fire-grates substantially in the manner and for the purposes hereinbefore described.

In witness whereof I, the said James Wavish, have to this my specification set my hand and seal, the twenty-sixth day of March, one thousand eight hundred and eighty.

JAMES WAVISH.

This is the specification referred to in the annexed Letters of Registration granted to James Wavish, this thirtieth day of June, A.D. 1880.

AUGUSTUS LOFTUS.

REPORT.

Sir,

Sydney, 8 June, 1880.

We do ourselves the honor to report, in reply to your B.C. communication of the 27th ultimo, 80/4144, with reference to James Wavish's Petition for Letters of Registration for an invention for "Improvements in or applicable to Locomotive, Marine, and other Steam Boilers, for the purpose of promoting the combustion of fuel and obtaining increased evaporating power," that we are of opinion that Letters of Registration may be granted to the Petitioner, in terms of his specification, drawings, &c.

We have, &c.,

E. O. MORIARTY.

The Principal Under Secretary.

CHAS. WATT.

[Drawings—one sheet.]

FIG.1.

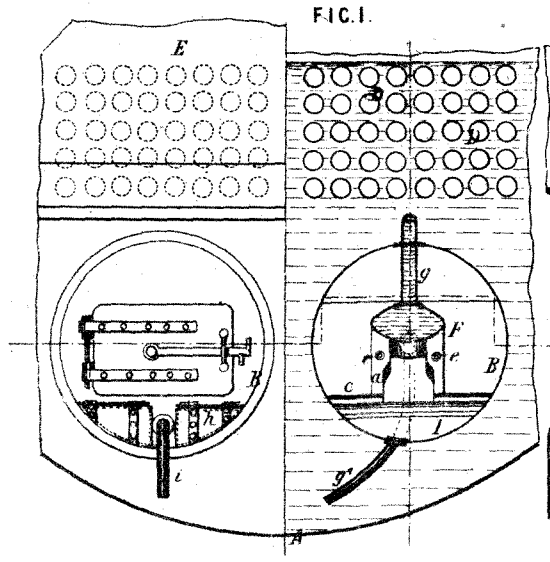

FIG.2.

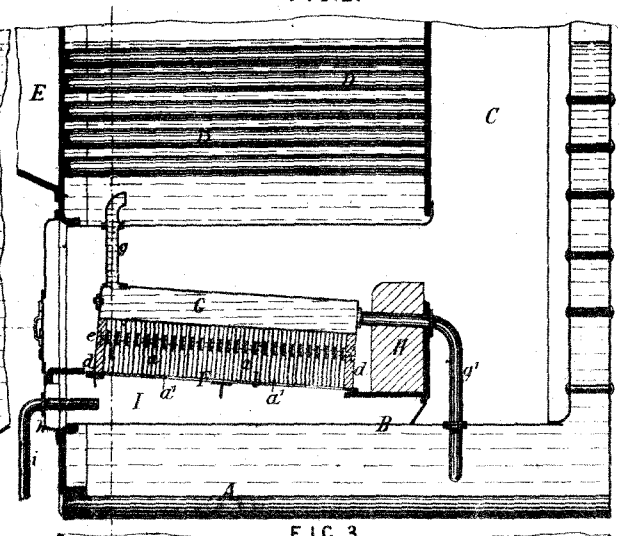

FIG.3.

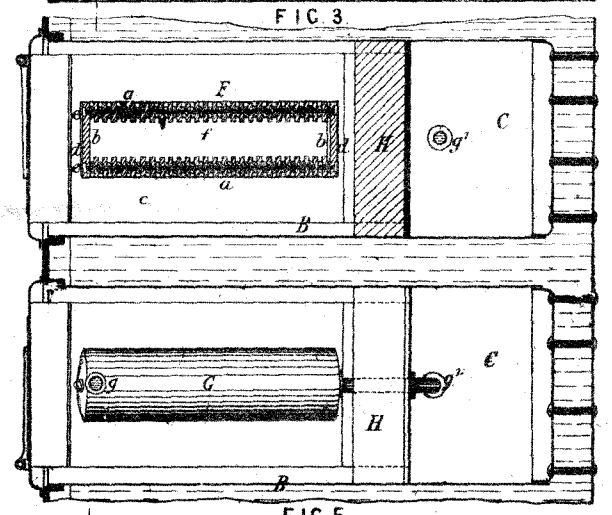

FIG.6.

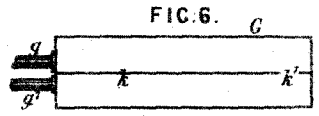

FIG.4.

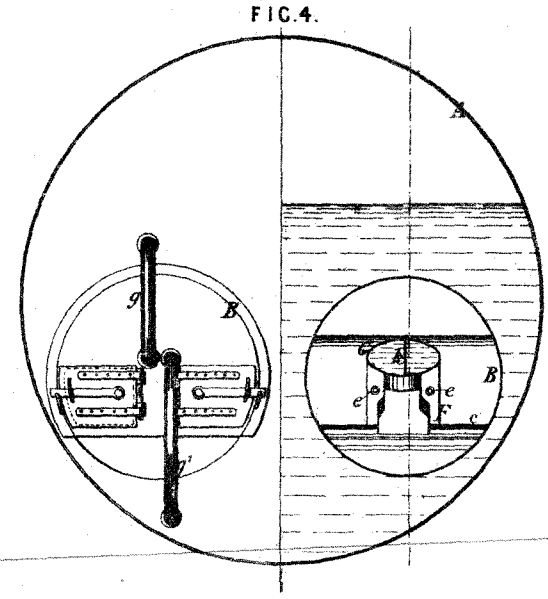

FIG.5.

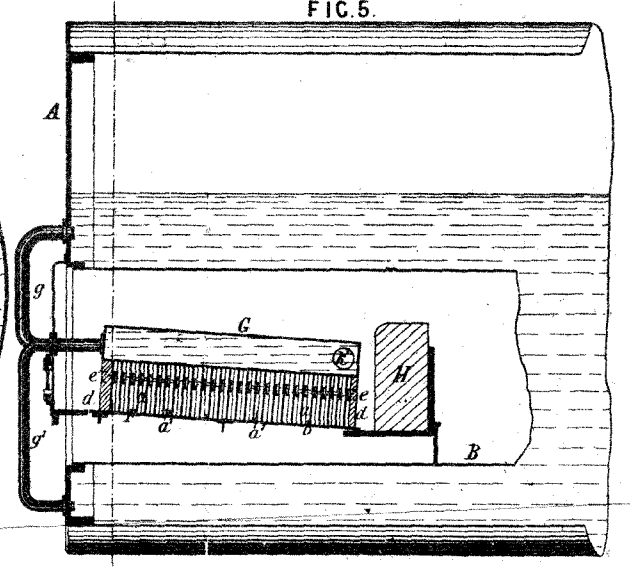

This is the sheet of Drawings referred to in the annexed Letters of Registration granted to James Wavish this Thirtieth day of June A.D.1880.

(Sig:357-)

" Augustus Loftus "

PHOTO-LITHOGRAPHED AT THE GOVT. PRINTING OFFICE,
SYDNEY, NEW SOUTH WALES.

A.D. 1880, 30*th June*. No. 850.

IMPROVEMENTS IN REFRIGERATION.

LETTERS OF REGISTRATION to Cassius Clay Palmer, for an improved method of producing Refrigeration in Ice-making and Refrigerating Machines, &c.

[Registered on the 1st day of July, 1880, in pursuance of the Act 16 Vic. No. 24.]

BY His Excellency the Right Honorable Sir Augustus William Frederick Spencer Loftus (commonly called Lord Augustus Loftus), Knight Grand Cross of the Most Honorable Order of the Bath, a Member of Her Majesty's Most Honorable Privy Council, Governor and Commander-in-Chief of the Colony of New South Wales and its Dependencies.

TO ALL TO WHOM THESE PRESENTS SHALL COME, greeting:

WHEREAS Cassius Clay Palmer, of the City of Oakland, in the County of Alameda and State of California, one of the United States of America, engineer, hath by his Petition humbly represented to me that he is the author or designer of a certain invention or improvement in manufactures, that is to say, of an invention entitled "An improved method of producing Refrigeration in Ice-making and Refrigerating Machines; also an improved method and apparatus for freezing water on the plates of Ice-making Machines and for detaching it therefrom, including also an improved method and apparatus for cooling air, and a pipe-coupling for connecting pipes in Ice-making and Refrigerating Machines," which is more particularly described in the specification, marked A, and the two sheets of drawings, marked B and C respectively, which are hereunto annexed; and that he, the said Petitioner, hath deposited with the Honorable the Treasurer of the said Colony of New South Wales the sum of Twenty Pounds sterling, for defraying the expense of granting these Letters of Registration, as required by the Act of Council, sixteenth Victoria, number twenty-four; and hath humbly prayed that I would be pleased to grant Letters of Registration, whereby the exclusive enjoyment and advantage of the said invention or improvement might be secured to him for a period of fourteen years: And I, being willing to give encouragement to all inventions and improvements in the arts or manufactures which may be for the public good, and having received a report favourable to the prayer of the said Petition, from competent persons appointed by me to examine and consider the matters stated therein and to report thereon for my information, am pleased, with the advice of the Executive Council, and in exercise of the power and authority given to me by the said Act of Council, to grant, and do by these Letters of Registration grant unto the said Cassius Clay Palmer, his executors, administrators, and assigns, the exclusive enjoyment and advantage of the said invention or improvement, for and during the term of fourteen years from the date hereof; to have, hold, and exercise unto the said Cassius Clay Palmer, his executors, administrators, and assigns, the exclusive enjoyment and advantage thereof, for and during and unto the full end and term of fourteen years from the date of these presents next and immediately ensuing, and fully to be complete and ended: Provided always, that if the said Cassius Clay Palmer shall not, within three days after the granting of these Letters of Registration, register the same in the proper office in the Supreme Court at Sydney, in the said Colony of New South Wales, then these Letters of Registration, and all advantages whatsoever hereby granted, shall cease and become void.

In witness whereof, I have hereunto set my sign manual, and have caused the present Letters of Registration to be sealed with the seal of the said Colony of New South Wales, at Government House, Sydney, in New South Wales, this thirtieth day of June, in the year of our Lord one thousand eight hundred and eighty.

[L.S.] AUGUSTUS LOFTUS.

Improvements in Refrigeration.

A.

SPECIFICATION of CASSIUS CLAY PALMER, of Oakland, County of Alameda, State of California, one of the United States of America, engineer, for an invention entitled "An improved method of producing Refrigeration in Ice-making and Refrigerating Machines; also an improved method and apparatus for freezing water on the plates of Ice-making Machines, and for detaching it therefrom; including also an improved method and apparatus for cooling air, and a pipe-coupling for connecting pipes in Ice-making and Refrigerating Machines."

MY invention relates to certain improvements in machines for generating cold for ice-making and refrigerating purposes; it also relates to a novel method of utilizing a volatile liquid in such machines in order to increase its vapourizing capacity, and consequently intensify its refrigerant effect. The volatile liquid which I shall ordinarily use is chlorate of ethyl, but any of the volatile liquids used in this class of machines can be used in accordance with my process with equal advantage. My manner of using the liquid is to introduce it into the freezing cells in the form of a spray or shower, so that it shall the more readily be converted into a vapour, and be distributed more evenly and uniformly throughout the cells, thus producing a more uniform action and intensifying the refrigerant effect by the more active vapourization of the liquid in the cells.

In the operation of ice machines I introduce the liquid in the manner stated into cells or chambers against the exterior sides of which the water is frozen, but in refrigerating machines I introduce it in the manner described into a chamber or vessel through which the air pipes or tubes pass so as to surround the pipes with a refrigerating temperature, and then I force air through the pipes by mechanical means.

In the accompanying drawings, fig. 1 is an isometrical view of the exterior of an ice-making machine or apparatus; fig. 2 is a transverse section taken vertically through the freezing chamber and the cell or plates; fig. 3 is an isometrical view of the exterior of a refrigerating machine or apparatus; fig. 4 is an end view in section of the refrigerating chamber; fig. 5 is a longitudinal vertical section through the chamber; fig. 6 is a detail view of the improved pipe-coupling or connection hereinafter described; fig. 7 is a view with all the parts in position when screwed together, and with the outer part in section of the coupling fig. 6; fig. 8 is a view of a freezing cell or plate, in longitudinal vertical section, showing the system of pipes connecting the cell and the several parts of the apparatus; fig. 9 is a detail view of the water-distributing buckets, and their endless carrying belt or apron.

A is the pump by means of which the circulation of the volatile liquid and its vapour is maintained. The suction side of this pump is connected to the freezing cell or chamber B (fig. 1) by a pipe, C, and a pipe, D, also leads from the pump to the condensing tank E, whence another pipe, F, leads to the freezing cell, so that the vapour is drawn from the cell by the action of the pump and passed into the condenser, where it is converted into a liquid, and returned to the cell to expand again into a vapour, in the ordinary way of operating ice-making and refrigerating machines.

The cells B are simply vapour-tight chambers constructed of metal plates, and they are placed inside of a box, case, or tank, G, and against their exterior sides the water is frozen. The volatile liquid is introduced in the lower part of the cell through one or more pipes, D, which are perforated so that the liquid will be injected into the cell through the perforations in the form of a spray or shower, and so fill the cell. The suction pipe C, through which the vapours are withdrawn from the cell, extends across the top of the cell, and may be either open or perforated.

By this means the vapourization of the liquid is facilitated as it is delivered into the cells or chambers, and between the metallic side plates on which the ice is formed, in a finely divided condition, so that it immediately expands into a vapour, producing a uniform and intense degree of cold.

By the ordinary method of operating these machines the tank G (fig. 1) is filled with water to the top of the cells, and the entire quantity of water has to be kept at a low temperature in order to form ice upon the plates or sides of the cell. By another method the water is sprayed upon the plates and the surfaces of the ice forming thereon; but by this latter method the freezing process, although it is somewhat accelerated, does not sufficiently reduce the temperature of the water to give the best results unless the water be retained in the tank and used over and over again, which is not the case, and the spraying operation, besides, aerates the water, so that the ice, when formed, is snowy or opaque.

By my invention I employ only a small quantity of water in the bottom of the tank, and use it over and over again. To do this I arrange a vertically moving endless belt, H, on each side of the cell, and upon each endless belt I secure a number of buckets, I I, at intervals apart. At the front and below each bucket I attach a flexible brush or apron, *e*, which presses tightly against the plate as the buckets are carried upwards. The lower part of the endless belt or carrier extends down and dips into the water in the bottom part of the tank, so that as the buckets pass around the lower roller they will fill themselves with water, and by means of a number of holes or perforations made in and along the lower part of the front of the bucket this water is allowed to ooze out and run down upon the surface of the flexible apron, and thus pass in a thin film from the apron on to the plate, and be distributed upon and along the surface, against which the apron is in contact.

The endless belt H is as wide as the plate or cell, and passes around a roller *h* at the top and another h^1 at the bottom of the tank, and it is driven by power applied to pulleys outside of the tank, while the buckets extend entirely across the length of the belt, and their perforations likewise extend across for the full width of the freezing plate, so that the water is distributed equally and uniformly upon and over the freezing surface.

The journals of the rollers *h* may bear in the ends of the tank, or special bearing plates J may be provided. The holes in which these journals bear are elongated or made at an angle to the freezing surface, so that as the ice increases in thickness during the process of formation on the plates the pressure of the buckets against the surface of the ice will force the rollers and the belt back. In order to prevent the upper edges of the buckets from scraping against the surface of ice, I bend them over so that their fronts form a curve, as shown in fig. 2 of the drawing, and thus present a curved and rounded face to the surface in contact with them.

At

Improvements in Refrigeration.

At the beginning of the freezing operation, when the plates or surfaces are bare, the belt and its buckets will have the position as shown in fig. 2; but as the ice forms and increases in thickness, the belts and buckets will be moved regularly backwards.

The best brush or apron that I have been able to find is a thin piece or plate of india-rubber attached beneath and along the front of each bucket so as to project outwards and downwards at an angle and wipe against the freezing surface. I do not, however, confine myself to any particular kind of brush or apron.

This method of raising the water from the well or bottom of the tank and applying it in a thin film to the freezing surface, greatly facilitates and accelerates the freezing process. The water never leaves the tank, but is kept moving in a continual film over the freezing surface, and in a uniform manner, so that the ice will form much more rapidly than if the water were sprayed or were frozen in bulk, and the resulting ice is perfectly clear and crystal.

When a batch of ice is formed, I shut off the gas from passing through the condenser, and lead it from the top of the condenser to a heater, K, where it is further heated and then led back into the cell, wherein its increased temperature acting upon the sides of the cell-plates heats them sufficiently to loosen and detach the ice therefrom. This is accomplished by the same pump A that circulates the gas through the machine and condenser. The top of the heater K is connected by a pipe, L, with the top of the condenser, and its bottom is connected by a pipe, M, with the lower part of the cell. During the freezing operation the cocks M M on these pipes L M are kept closed, so that the gas is turned through the condenser and liquefied after it leaves the cell, but in the operation of detaching the ice from the exterior sides of the cell, the cock *f* of the supply-pipe is closed to shut off the liquid, and the cocks *m m* of their pipes are opened; this allows the gas to run into and through the heater K, and thence into the cell, where its increased temperature operates to heat the plates or sides of the cell, and thus loosen the ice. By this means I utilize the same vapours for detaching the ice that I use for producing it, and by causing it when superheated to flow or circulate through the cell and apparatus in the same direction that the circulation of the ice-producing vapours follow, the operation of detaching the ice is performed without stopping the pump.

In constructing a refrigerating machine, I substitute in place of the cells and tank a refrigerating chamber shown at fig. 3 of the drawings, and in detail also in figs. 4 and 5. This chamber consists of a cylindrical or other suitably-shaped vessel, N, having tubes *o o*, passing through it from end to end. These tubes extend from one tube-sheet or head P at one end to the other head P′ at the opposite end of the cylinder, like the tubes of a steam boiler, and the ends of the tubes are fitted tightly in the heads, so that the space within the cylinder or vessel between the two heads is perfectly vapour-tight.

The shell of the vessel at each end beyond the heads or tube-sheets is extended and fitted with an outer cap or head, so as to form at each end a chamber, R, and these two chambers are connected by the tubes O O. The space within the vessel around the tubes is to receive the volatile liquid and the vapour produced therefrom, and the chambers R are to hold and apply the air to the refrigerating surfaces.

One of these chambers is connected with a fan-blower, S, by means of a pipe, T, while the other chamber has an outlet-pipe, T′. By this or similar means for causing a body of air to move from one chamber through the refrigerating tubes O O to the opposite chamber, a circulation of the air to be reduced in temperature is maintained, and when the volatile liquid is introduced into the compartment Q, and the pump A′ set in motion, an intense degree of cold will be generated around the tubes. The air circulating through the tubes will then be reduced in temperature. During the refrigeration the air will also be dehydrated by the congealing of any moisture therein upon the interior surfaces of the tubes, upon which the cold surfaces of the tubes will act and cause it to be deposited.

It will be noticed that the air is introduced into one chamber R and discharged from the other chamber at the opposite end of the vessel through pipes of small area compared with the area of the chambers and their connecting tubes, so that the chambers and tubes will at all times contain a body of air that will be kept in contact with the cold surfaces a considerable length of time while passing from the inlet to the outlet of the vessel.

Another improvement which I have made relating to this class of machines is a coupling for connecting the various pipes used in ice-making and refrigerating machines. One of the principal difficulties in connection with the construction of these machines has been to join the pipes together so as to make all the joints perfectly gas and vapour tight, owing to the continual contraction and expansion to which the pipes are subjected.

My improved coupling is represented at figs. 6 and 7 of the drawings. It consists of a cylindrical enlargement, *a*, formed on the end of one pipe or tube, and a cup-shaped enlargement, *b*, formed on the end of the adjoining pipe or tube. The enlargement *a* is of the proper size to enter and seat itself against the bottom of the hollow enlargment *b* of the adjoining pipe, and thus bring the bores of the two pipes in line. A suitable packing, *c*, is placed around the pipe U and against the back of the enlargement *a*, and by means of a ring or follower, *d*, slipped down around the pipe U and against the packing, and of a nut or gland, V, placed over this follower, and engaging with the screw-threaded exterior surface of the cup-shaped enlargement *b*. This ring or follower acts to compress the packing *c*, and cause it to expand against the interior surface of the cup-shaped head *b* of the other pipe-section. This forms a simple and perfectly gas and vapour tight joint.

Having thus described my improvements in ice-making and refrigerating machines, what I claim and desire to secure by Letters Patent is—

First—The process or method of producing refrigeration by introducing a volatile liquid into the cells or chambers of ice-making and refrigerating machines in the form of a shower or spray.

Second—The process of pouring a thin film or sheet of water against the freezing surfaces of ice-machines for the purposes described.

Third—The improvement in the manufacture of artificial ice consisting in maintaining a small body or quantity of water in the bottom of the tank, and causing the same to be continually taken up and spread in a thin film over the freezing surface, without being removed from the tank, substantially as specified.

Fourth—

Fourth—In combination with the tank G and freezing-cell B, I claim the vertically-moving endless belt H, with its perforated buckets I I, each of which is provided with a flexible brush or apron, *e*, substantially as and for the purpose described.

Fifth—The vertically-moving endless belt H, passing around rollers at each end, the journals of which rollers bear in elongated slots or openings, *j j*, said belt being provided with the water-buckets I I, and brushes or aprons, *e*, for the purpose described.

Sixth—The improved method of heating the freezing plates of ice-machines, in order to detach the ice therefrom, consisting in cutting off the vapour from the condenser, and passing it through a heater, and leading it thence into the cells in a continuous circulation, substantially as herein set forth.

Seventh—In combination with the freezing-cells B, pump A, and condenser E, of an ice-machine, I claim the heater K, connected by pipe L with the top of the condenser, and also connected by pipe M with the cells, the said pipes L M having cocks M M, so that the gas can be led from the condenser and turned into the cells from the said heater without stopping the pump, substantially as above specified.

Eighth—The process of cooling air by passing it through tubes arranged within a refrigerating vessel or chamber, in which cold is produced by the vapourization of a volatile liquid, substantially as above specified.

Ninth—The refrigerating cylinder or vessel N, having the tube-sheets P P′ connected by the tubes *o o*, and provided with the chambers R at its ends—one of said chambers being connected with a fan-blower or other air-moving apparatus, and the other chamber being provided with an outlet-pipe, T′, in combination with pipe C′, pump A′, pipe D′, condenser E′, and pipe F′, all combined and arranged to operate substantially as described.

Tenth—A refrigerating vessel or chamber, N, having air tubes, *o o*, passing through it, and provided with chambers R R at its ends, in combination with an air-forcing apparatus at one end and a discharge-pipe at the other end, substantially as described.

Eleventh—In an air-cooling machine or apparatus in which the air is caused to pass through tubes that run through a refrigerant chamber, I claim discharging the air through a pipe which is of smaller area than the area of the tubes and air-chambers of the vessel, substantially as and for the purpose described.

Twelfth—A pipe-coupling consisting of a cylindrical enlargement, *a*, on the end of one pipe or section, and a cup-shaped enlargement, *b*, on the adjoining end of the next pipe or section, in combination with the packing *c*, ring or follower *d*, and nut or gland V, combined and applied in the manner specified.

In witness whereof I, the said Cassius Clay Palmer, have hereunto set my hand and seal.

CASSIUS CLAY PALMER.

Witnesses—

EDWARD ELNATHAN OSBORN.
WILLIAM FRANK CLARK.

This is the specification, marked A, referred to in the annexed Letters of Registration granted to Cassius Clay Palmer, this thirtieth day of June, A.D. 1880.

AUGUSTUS LOFTUS.

REPORT.

Sir,

Sydney, 8 June, 1880.

The application of Mr. C. C. Palmer for Letters of Registration for an "Improved method of producing refrigeration in Ice-making and Refrigerating Machines, &c." having been referred to us, we have examined the specification and drawings accompanying the same, and have now the honor to report that we see no objection to the issue of Letters of Registration for the apparatus as described and figured.

We have, &c.,

J. SMITH.
CHAS. WATT.

The Principal Under Secretary.

[Drawings—two sheets.]

B

[850]

Fig 1

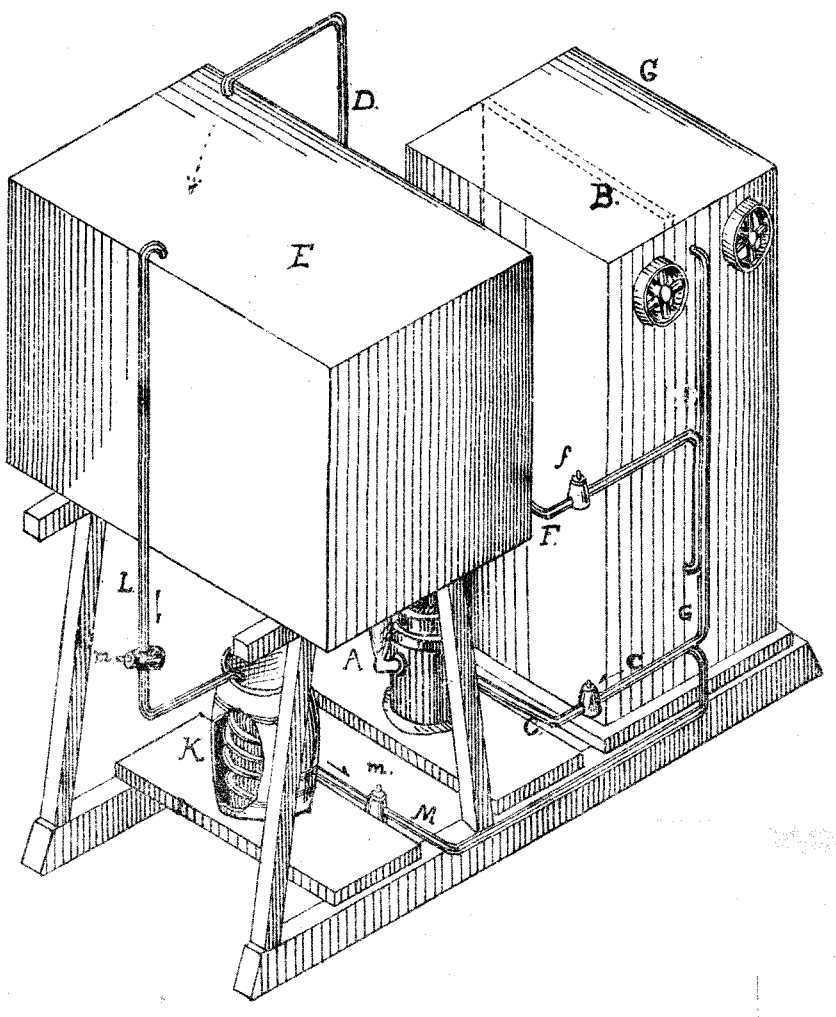

Fig 2.

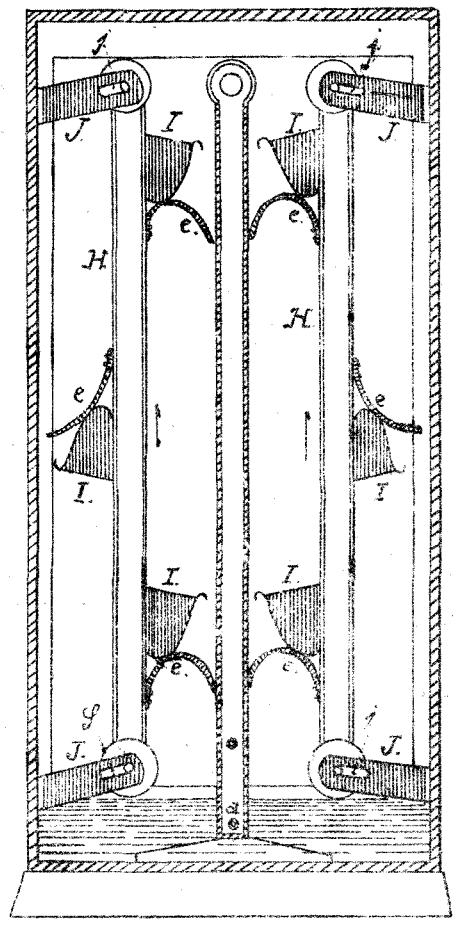

Fig. 4

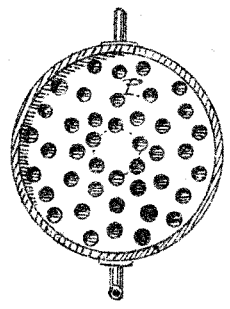

Fig. 5.

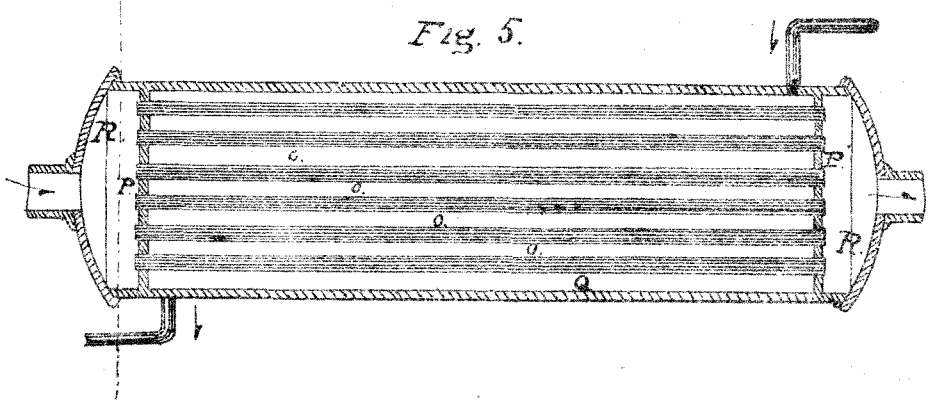

Fig. 3.

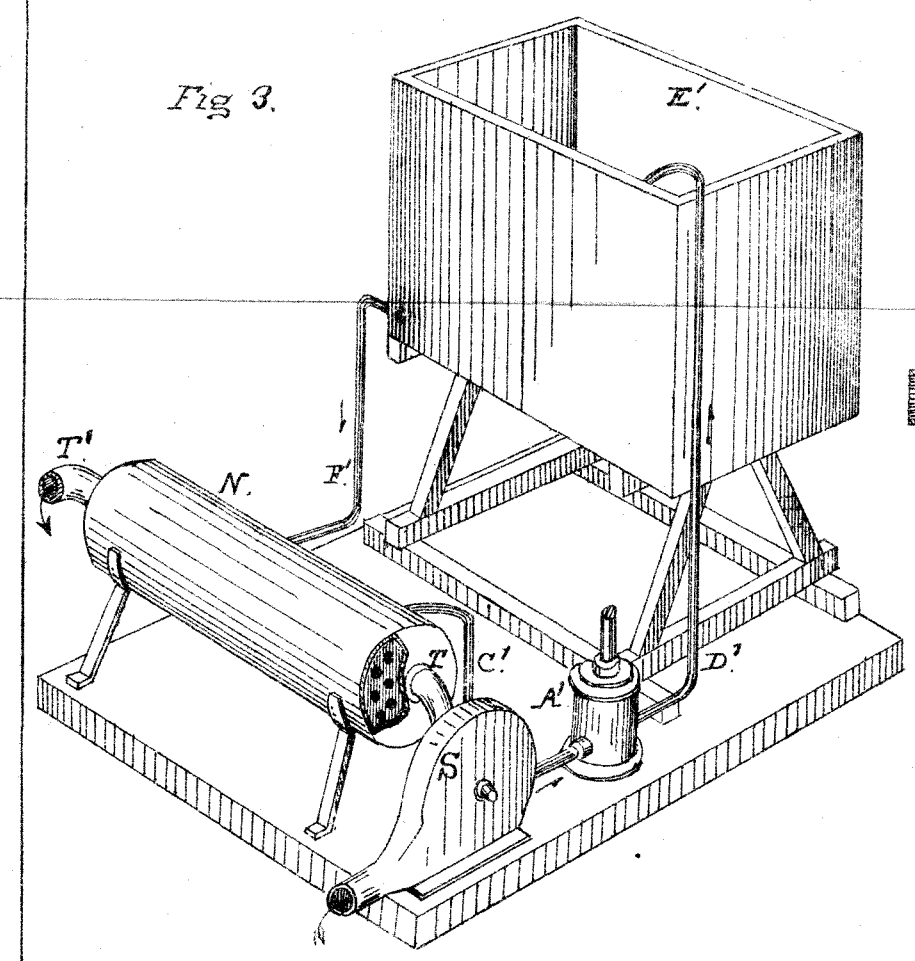

Fig 6

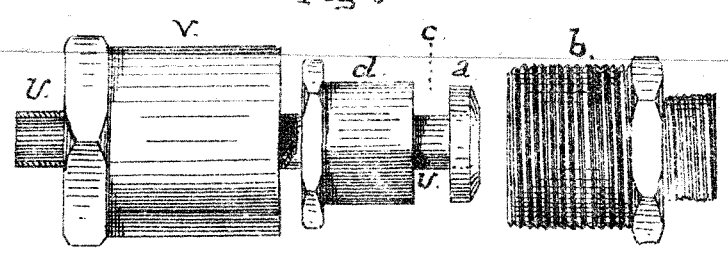

Fig 7.

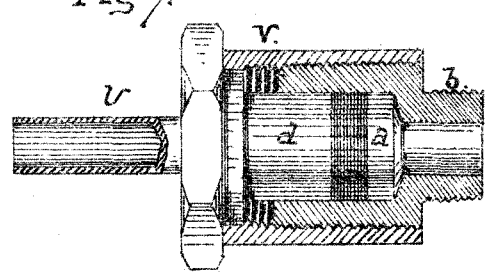

This is the Sheet of Drawings marked "B" referred to in the annexed Letters of Registration granted to Cassius Palmer this Thirtieth day of June A.D. 1880.

(Sig: 357)

"Augustus Tolton"

PHOTO-LITHOGRAPHED AT THE GOVT. PRINTING OFFICE, SYDNEY, NEW SOUTH WALES.

C

[850]

Fig. 8.

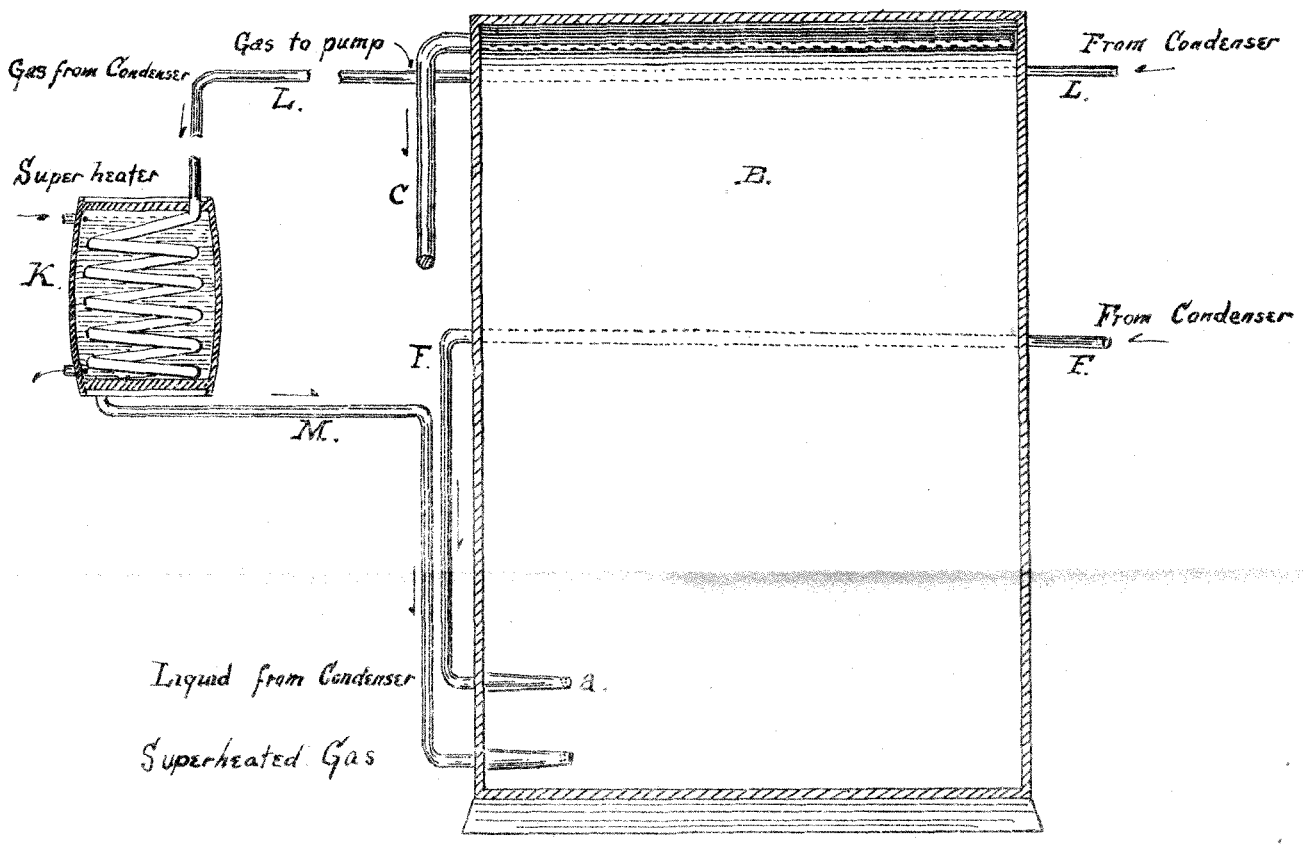

Fig 9

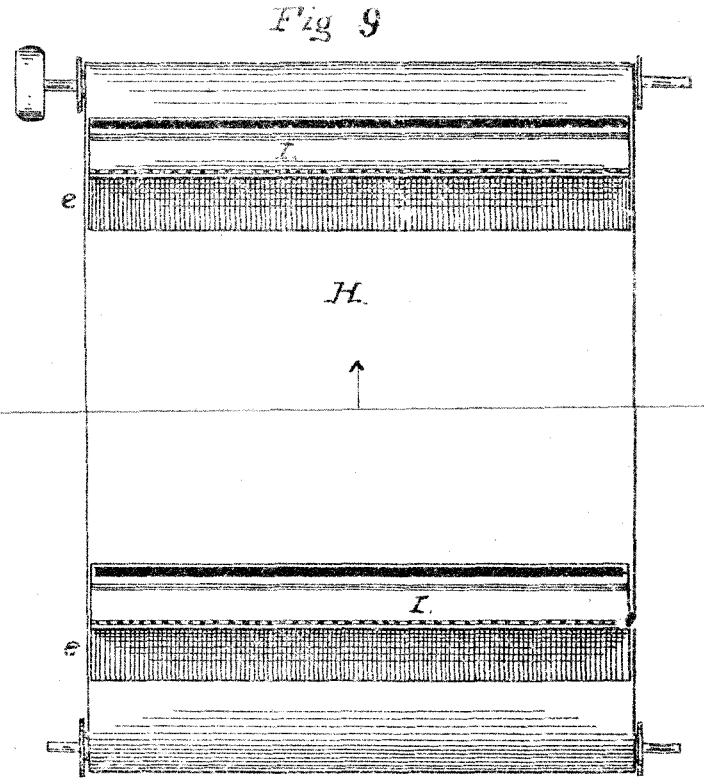

This is the Sheet of Drawings marked "C" referred to in the annexed Letters of Registration granted to Cassius Clay Palmer this Thirtieth day of June 1880.

(Sig: 357-)

Augustus Sefton

PHOTO-LITHOGRAPHED AT THE GOVT. PRINTING OFFICE, SYDNEY, NEW SOUTH WALES.

A.D. 1880, 30*th June*. No. 851.

IMPROVED PROCESS FOR CHLORINATING ORES.

LETTERS OF REGISTRATION to James Howell Mears, for an Improved Process for Chlorinating Ores.

[Registered on the 1st day of July, 1880, in pursuance of the Act 16 Vic. No. 24.]

BY HIS EXCELLENCY THE RIGHT HONORABLE SIR AUGUSTUS WILLIAM FREDERICK SPENCER LOFTUS (commonly called LORD AUGUSTUS LOFTUS), Knight Grand Cross of the Most Honorable Order of the Bath, a Member of Her Majesty's Most Honorable Privy Council, Governor and Commander-in-Chief of the Colony of New South Wales and its Dependencies.

TO ALL TO WHOM THESE PRESENTS SHALL COME, greeting:

WHEREAS JAMES HOWELL MEARS, of the city and county of Philadelphia and State of Pennsylvania, United States of America, physician, hath by his Petition humbly represented to me that he is the author or designer of a certain invention or improvement in manufactures, that is to say, of an invention entitled an "Improved Process for Chlorinating Ores," which is more particularly described in the specification which is hereunto annexed; and that he, the said Petitioner, hath deposited with the Honorable the Treasurer of the said Colony of New South Wales the sum of Twenty Pounds sterling, for defraying the expense of granting these Letters of Registration, as required by the Act of Council sixteenth Victoria, number twenty-four; and hath humbly prayed that I would be pleased to grant Letters of Registration, whereby the exclusive enjoyment and advantage of the said invention or improvement might be secured to him for a period of fourteen years: And I, being willing to give encouragement to all inventions and improvements in the arts or manufactures which may be for the public good, and having received a report favourable to the prayer of the said Petition, from competent persons appointed by me to examine and consider the matters stated therein and to report thereon for my information, am pleased, with the advice of the Executive Council, and in exercise of the power and authority given to me by the said Act of Council, to grant, and do by these Letters of Registration grant unto the said James Howell Mears, his executors, administrators, and assigns, the exclusive enjoyment and advantage of the said invention or improvement, for and during the term of fourteen years from the date hereof; to have, hold, and exercise unto the said James Howell Mears, his executors, administrators, and assigns, the exclusive enjoyment and advantage thereof, for and during and unto the full end and term of fourteen years from the date of these presents next and immediately ensuing, and fully to be complete and ended: Provided always, that if the said James Howell Mears shall not, within three days after the granting of these Letters of Registration, register the same in the proper office in the Supreme Court, at Sydney, in the said Colony of New South Wales, then these Letters of Registration, and all advantages whatsoever hereby granted, shall cease and become void.

In witness whereof, I have hereunto set my sign manual, and have caused the present Letters of Registration to be sealed with the seal of the said Colony of New South Wales, at Government House, Sydney, in New South Wales, this thirtieth day of June, in the year of our Lord one thousand eight hundred and eighty.

[L.S.] AUGUSTUS LOFTUS.

SPECIFICATION

Improved Process for Chlorinating Ores.

SPECIFICATION of JAMES HOWELL MEARS, of the city and county of Philadelphia and State of Pennsylvania, United States of America, physician, for an invention entitled an "Improved Process for Chlorinating Ores."

MY invention consists in treating ores by means of chlorine gas under pressure, or under pressure greater than that of the atmosphere, whether the same is accomplished by chemical or mechanical means.

In carrying out my invention I proceed as follows:—The ore is properly roasted and pulverized (the finer the better), and introduced into a tank with about one-half its weight of water, into which is slaked a proper proportion of lime (ordinary lime of commerce), the whole then being thoroughly incorporated by rotating the tank. Chlorine gas is now introduced into the mass, and the tank kept in motion until no more gas will be absorbed, which can be determined by a suitable device for the purpose. The rotation of the tank is then discontinued, dilute sulphuric acid is added to the mixture, and the tank is again rotated for from half an hour to one hour, when the chlorination is complete.

There is now a large excess of chlorine under pressure produced by the chlorine gas being evolved by the sulphuric acid from the lime, sulphate of lime being formed and chlorine thrown off. The tank is now tapped, and the excess of chlorine is conducted into a second tank or vessel similar to the first tank or vessel, and also containing a charge of ore ready to be treated.

After the pressure and excess of gas has passed off, the tank is turned, opened, and emptied into a proper vessel, when the water containing the chloride of gold in solution is drawn off, and the metal precipitated with sulphate of iron or other precipitant.

The tank or vessel that I employ is so constructed that when charged with ore, &c., it will be about two-thirds full, and of sufficient strength to endure a pressure of 40 lbs. to 50 lbs. to the square inch.

The shaft on which the tank revolves will be hollow, so that the chlorine gas may be admitted into the tank while the latter is in motion. The inner face of the tank will be provided with cleats secured thereto at intervals, so as to facilitate the stirring or agitation of the mass, and with an apartment or receptacle for sulphuric acid located near the top or vent of the tank, whereby when the latter is turned, it will empty the contents of the apartment or receptacle into the mass of ore.

By this method of subjecting ore to chlorine in connection with lime, I am enabled to charge the ore with a very large volume of chlorine, which is condensed by absorption by the lime, and held in store as it were until the proper time, when it is again evolved under circumstances most suitable for combining with the gold.

By the evolution of chlorine gas within the mass of ore while in a state of agitation in such quantities and under circumstances to produce pressure, the combination of the gold and chlorine takes place with almost as much activity as it does in nitro-muriatic acid.

By having the chlorine gas in large excess and under the pressure produced, gold will be taken up of a coarser grade than ordinarily, and fine gold is instantly combined. The process is complete in from one to two hours, thus saving from seven to eight hours in introducing chlorine into the ore, and also the time allowed for the gas to remain in the ore, from twenty-four to forty-eight hours before chlorination is said to be complete by the usual processes of chlorination. In from one to three hours all coarse gold will be combined that is not dissolved by the ordinary processes of chlorination.

In lieu of the chemical process hereinbefore stated, I may employ mechanical means for producing the pressure of the chlorine gas. In this case I use a pump or compresser, adapted to force chlorine gas into a receiver until the desired pressure is raised, after which the gas is drawn off into the chlorinators as required. This is a simplification and cheapening of my process, for by it I dispense with sulphuric acid and other chemicals in the chlorinators or revolving tanks, but either process specified renders good service.

Claim:—

In treating ores, the process of chlorination consisting in subjecting the ore mixed with water in a strong air-tight vessel while in a state of agitation to chlorine gas under a greater pressure than that of the atmospheric pressure, so as to produce the pressure for the purpose of extracting the precious metals, in combination, as chlorides in solution substantially as and for the purpose set forth.

In witness whereof I, the said James Howell Mears, have hereto set my hand and seal, this twenty-second day of March, 1880.

Witness—JOHN ALDREDERSHEIM. JAMES HOWELL MEARS.

This is the specification referred to in the annexed Letters of Registration granted to James Howell Mears, this thirtieth day of June, A.D. 1880.

AUGUSTUS LOFTUS.

REPORT.

Sir, Sydney, 8 June, 1880.

The application of Mr. James H. Mears for Letters of Registration for an "Improved Process for Chlorinating Ores" having been referred to us, we have examined the specification accompanying the same, and have now the honor to report that we see no objection to the issue of Letters of Registration as prayed for.

We have, &c.,

J. SMITH.

The Principal Under Secretary. CHAS. WATT.

A.D. 1880, 30*th June*. No. 852.

CARPET EXHIBITOR.

LETTERS OF REGISTRATION to Orlo W. Richardson, for a Carpet Exhibitor.

[Registered on the 1st day of July, 1880, in pursuance of the Act 16 Vic. No. 24.]

BY His Excellency the Right Honorable Sir Augustus William Frederick Spencer Loftus (commonly called Lord Augustus Loftus), Knight Grand Cross of the Most Honorable Order of the Bath, a Member of Her Majesty's Most Honorable Privy Council, Governor and Commander-in-Chief of the Colony of New South Wales and its Dependencies.

TO ALL TO WHOM THESE PRESENTS SHALL COME, greeting:

WHEREAS Orlo W. Richardson, of Chicago, State of Illinois, United States of America, hath by his Petition humbly represented to me that he is the author or designer of a certain invention or improvement in manufactures, that is to say, of an invention known as a "Carpet Exhibitor," which is more particularly described in the specification and the sheet of drawings which are hereunto annexed; aud that he, the said Petitioner, hath deposited with the Honorable the Treasurer of the said Colony of New South Wales the sum of Twenty Pounds sterling, for defraying the expense of granting these Letters of Registration, as required by the Act of Council, sixteenth Victoria, number twenty-four; and hath humbly prayed that I would be pleased to grant Letters of Registration, whereby the exclusive enjoyment and advantage of the said invention or improvement might be secured to him for a period of fourteen years: And I, being willing to give encouragement to all inventions and improvements in the arts or manufactures which may be for the public good, and having received a report favourable to the prayer of the said Petition, from competent persons appointed by me to examine and consider the matters stated therein and to report thereon for my information, am pleased, with the advice of the Executive Council, and in exercise of the power and authority given to me by the said Act of Council, to grant, and do by these Letters of Registration grant unto the said Orlo W. Richardson, his executors, administrators, and assigns, the exclusive enjoyment and advantage of the said invention or improvement, for and during the term of fourteen years from the date hereof; to have, hold, and exercise unto the said Orlo W. Richardson, his executors, administrators, and assigns, the exclusive enjoyment and advantage thereof, for and during and unto the full end and term of fourteen years from the date of these presents next and immediately ensuing, and fully to be complee and ended: Provided always, that if the said Orlo W. Richardson shall not, within three days after the granting of these Letters of Registration, register the same in the proper office in the Supreme Court, at Sydney, in the said Colony of New South Wales, then these Letters of Registration, and all advantages whatsoever hereby granted, shall cease and become void.

In witness whereof, I have hereunto set my sign manual, and have caused the present Letters of Registration to be sealed with the seal of the said Colony of New South Wales, at Government House, Sydney, in New South Wales, this thirtieth day of June, in the year of our Lord one thousand eight hundred and eighty.

[L.S.]

AUGUSTUS LOFTUS.

SPECIFICATION

Carpet Exhibitor.

SPECIFICATION of O. W. RICHARDSON'S "Carpet Exhibitor."

BE IT KNOWN, that I, O. W. Richardson, of Chicago, Illinois, United States of America, am the inventor of a new and useful device, known as a "Carpet Exhibitor," which I believe will be of great public utility.

The main object of my invention is to combine reflecting surfaces, so as to multiply in reflections samples of carpets or other merchandise, whereby merchants may be saved the necessity of handling large bodies of such merchandise in exhibiting it to their customers.

The main advantages of my invention are as follows:—

By its use dealers are enabled to display the effect of a multiplication of figures or styles from the samples occupying a small space, and the multiplied reflections of any single pattern or style shown; thus economising in their expenses by saving the necessity for large show-rooms and great labour in handling heavy rolls or packages of goods as heretofore.

To effect, I describe my invention as follows, reference being had to accompanying drawings:—

Fig. 1 represents the carpet exhibitor and the manner which I prefer to connect the parts, though many devices may be used for connecting them together.

Fig. 2 represents one side or mirror of the exhibitor, with the connecting appliance, which allows either side to be shortened or lengthened in effect as a reflector for the purpose designed.

By so connecting several mirrors that they may reflect into each other, I form a space in the interior, or between the mirrors, just large enough to receive any specified sample of merchandise. For convenience, I prefer a quadrangular space to be thus made.

I claim as my invention—A device for exhibiting merchandise, by the combination of several reflecting surfaces connected together, so as to allow of the size of the space between the said mirrors or reflecting surfaces being increased or diminished at pleasure, and so arranged as to multiply in reflections the effect of a single article, for the purpose above named and substantially as set forth.

O. W. RICHARDSON,
By his Agent or Attorney, J. B. CARTER.

This is the specification referred to in the annexed Letters of Registration granted to Orlo W. Richardson, this thirtieth day of June, A.D. 1880.

AUGUSTUS LOFTUS.

REPORT.

Sir, Sydney, 31 May, 1880.

We do ourselves the honor to state that we see no objection to the issue of Letters of Registration securing to Mr. O. W. Richardson an invention termed a "Carpet Exhibitor," in terms of his Petition, specification, drawings, and claim transmitted for our report under your blank cover communication of the 20th instant, No. 3,982.

We have, &c.,
GOTHER K. MANN.
ROBT. GEO. MASSIE.

The Principal Under Secretary.

[Drawings—one sheet.]

O.W.RICHARDSON'S
CARPET EXHIBITOR.

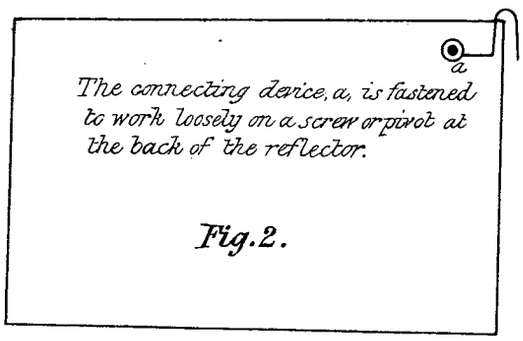

The connecting device, a, is fastened to work loosely on a screw or pivot at the back of the reflector.

Fig.2.

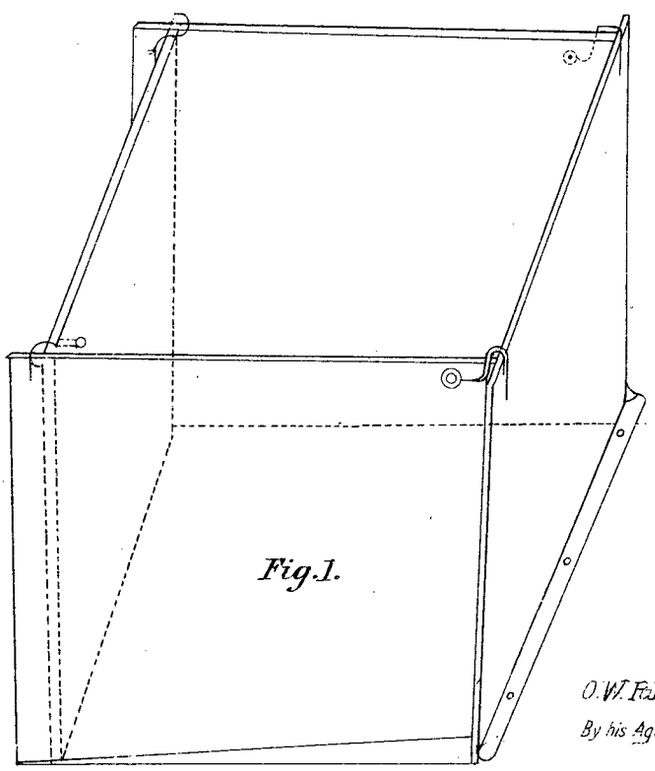

Fig.1.

O.W. Richardson.
By his Agent or Attorney
J. B. Carter.

This is the Sheet of Drawings referred to in the annexed Letters of Registration, granted to Orle W. Richardson, this thirtieth day of June, A.D. 1880. Augustus Loftus.

A.D. 1880, *9th July.* No. 853.

IMPROVED BLASTING POWDER.

LETTERS OF REGISTRATION to Raymond Cahuc, for a new or improved Blasting Powder.

[Registered on the 12th day of July, 1880, in pursuance of the Act 16 Vic. No. 24.]

BY His Excellency the Right Honorable Sir Augustus William Frederick Spencer Loftus (commonly called Lord Augustus Loftus), Knight Grand Cross of the Most Honorable Order of the Bath, a Member of Her Majesty's Most Honorable Privy Council, Governor and Commander-in-Chief of the Colony of New South Wales and its Dependencies.

TO ALL TO WHOM THESE PRESENTS SHALL COME, greeting:

WHEREAS Raymond Cahuc, of Toulouse, in the Republic of France, hath by his Petition humbly represented to me that he is the author or designer of a certain invention or improvement in manufactures, that is to say, of an invention entitled "A new or improved Blasting Powder," which is more particularly described in the specification which is hereunto annexed; and that he, the said Petitioner, hath deposited with the Honorable the Treasurer of the said Colony of New South Wales the sum of Twenty Pounds sterling, for defraying the expense of granting these Letters of Registration as required by the Act of Council, sixteenth Victoria, number twenty-four; and hath humbly prayed that I would be pleased to grant Letters of Registration, whereby the exclusive enjoyment and advantage of the said invention or improvement might be secured to him for a period of fourteen years: And I, being willing to give encouragement to all inventions and improvements in the arts or manufactures which may be for the public good, and having received a report favourable to the prayer of the said Petition, from competent persons appointed by me to examine and consider the matters stated therein and to report thereon for my information, am pleased, with the advice of the Executive Council, and in exercise of the power and authority given to me by the said Act of Council, to grant, and do by these Letters of Registration grant unto the said Raymond Cahuc, his executors, administrators, and assigns, the exclusive enjoyment and advantage of the said invention or improvement, for and during the term of fourteen years from the date hereof; to have, hold, and exercise unto the said Raymond Cahuc, his executors, administrators, and assigns, the exclusive enjoyment and advantage thereof, for and during and unto the full end and term of fourteen years from the date of these presents next and immediately ensuing, and fully to be complete and ended: Provided always, that if the said Raymond Cahuc shall not, within three days after the granting of these Letters of Registration, register the same in the proper office in the Supreme Court, at Sydney, in the said Colony of New South Wales, then these Letters of Registration, and all advantages whatsoever hereby granted, shall cease and become void.

In witness whereof, I have hereunto set my sign manual, and have caused the present Letters of Registration to be sealed with the seal of the said Colony of New South Wales, at Government House, Sydney, in New South Wales, this ninth day of July, in the year of our Lord one thousand eight hundred and eighty.

[L.S.] AUGUSTUS LOFTUS.

Improved Blasting Powder.

SPECIFICATION of RAYMOND CAHUC, of Toulouse, in the Republic of France, for an invention entitled "A new or improved Blasting Powder."

MY new or improved powder is made as follows: In one hundred equal parts by weight I take forty-eight to seventy parts of nitrate of potash or other equivalent salt, the quantity being regulated according to the strength of powder required; eight to sixteen parts of sulphur, according to the quality and the rapidity of explosive power desired in the powder; three to five parts of lamp-black or soot (soot from wood is preferable to that from coal, and lamp-black is preferable to soot)—the quantity is regulated according to the strength and rapidity of explosion required. The remainder of the hundred parts are made up of spent tan (if containing refuse animal matter preferred) or sawdust, or the two combined in any proportions. The spent tan is preferred, but whichever is used it should be well dried before being employed. The above ingredients are finely ground and then mixed together in a boiler and moistened to a consistency of a stiff paste with water, in which has been previously dissolved sulphate of iron to the extent of from one to five per cent. by weight of the other ingredients or substances, the quantity being regulated according to the purity of the soot or lamp-black and the tan or saw-dust, the smaller quantity only being necessary with purity of the other ingredients. The mixture is then subjected to a heat of from 120° to 130° (Rem.) under which the whole first liquefies and afterwards solidifies. Whilst subjected to this heat the mass should be constantly stirred with a wooden instrument, especially whilst settling, otherwise the whole may harden into a lump, but if stirred will become powder. On this stage being reached the compound is removed from the fire and subjected to a lower heat, sufficient to dry it, say about 50° (Rem). The compound is then ready for use and may be stored and carried about with the utmost safety, as it will not explode unless confined and compressed.

To obtain the full results and benefits of the powder it should be well compressed before being exploded. It may be exploded by the means ordinarily employed for firing ordinary blasting powder.

The boiler in which the mixture is heated should be much larger than necessary to hold the ingredients whilst cool, as on being subjected to the heat the mixture increases greatly in bulk.

In practice I have found the following proportions of the before-mentioned ingredients produce the best powder for the respective purposes named:—For the blasting of hard material offering great resistance I use of saltpetre seventy parts, sulphur twelve parts, lamp-black five parts, tan or saw-dust (well dried) thirteen parts, and sulphate of iron two parts; for substances offering less resistance and for coal-getting I use of saltpetre sixty-four parts, sulphur thirteen parts, lamp-black four parts, spent tan or saw-dust nineteen parts, and sulphate of iron three parts.

For bituminous coal and gypsum quarries and such-like materials, I use of saltpetre fifty-six parts, sulphur fourteen parts, lamp-black three parts, tan or saw-dust twenty-seven parts, and sulphate of iron five parts.

For many purposes my compound may be profitably employed, combined with nitro-glycerine, kerosene, or other similar explosive oils or substances, or as for example, for torpedoes and stone-quarrying and works under water. The combined product is not inexplosive as is my product alone, but the mixture is only made at the moment when it is to be used, thus reducing the danger to a minimum.

A good proportion for a good serviceable compound is almost fifteen to twenty five per cent. of nitro-glycerine or the other explosive employed, the remainder being my improved powder; but of course the proportions must necessarily vary according to the strength of explosion required.

The mixture may be effected either in the bore-hole or previously in a wooden vessel.

The tamping must be carefully effected in the usual manner.

I do not claim broadly the combination of the several ingredients herein mentioned in order to produce a blasting powder, but I do claim as the invention for which I am desirous of securing Letters Patent, the combination of the several ingredients forming my new or improved blasting powder, in the manner and proportions substantially as stated, and either mixed with or not mixed with nitro-glycerine, kerosene, or other similar explosive oil or substance, as herein described and explained.

In witness whereof, I, the said Raymond Cahuc, have hereto set my hand and seal, this third day of June, one thousand eight hundred and eighty.

RAYMOND CAHUC,
By his Agent, EDWD. WATERS.

This is the specification referred to in the annexed Letters of Registration granted to Raymond Cahuc, this ninth day of July, A.D. 1880.

AUGUSTUS LOFTUS.

REPORT.

Sir, Sydney, 12 June, 1880.

The application of Mr. Raymond Cahuc for Letters of Registration for "A new or improved Blasting Powder" having been referred to us, we have examined the specification accompanying the same, and have now the honor to report that we see no objection to the issue of Letters of Registration as prayed for.

We have, &c.,
J. SMITH.
CHAS. WATT.

The Principal Under Secretary.

A.D. 1880, 26*th July*. No. 854.

IMPROVEMENTS IN FILTERING WATER AND OTHER LIQUIDS.

LETTERS OF REGISTRATION to Prosper Auguste Maignen and Jules Retif, the younger, for Improvements in the method of and in the construction and arrangement of Apparatus for Filtering Water and other Liquids.

[Registered on the 27th day of July, 1880, in pursuance of the Act 16 Vic. No. 24.]

BY His Excellency the Right Honorable Sir Augustus William Frederick Spencer Loftus (commonly called Lord Augustus Loftus), Knight Grand Cross of the Most Honorable Order of the Bath, a Member of Her Majesty's Most Honorable Privy Council, Governor and Commander-in-Chief of the Colony of New South Wales and its Dependencies.

TO ALL TO WHOM THESE PRESENTS SHALL COME, greeting:

WHEREAS Prosper Auguste Maignen, of London, in the county of Middlesex, England, wine merchant, and Jules Retif, the younger, of Lyons, in the Republic of France, engineer, have by their Petition humbly represented to me that they are the authors or designers of a certain invention or improvement in manufactures, that is to say, of an invention entitled "Improvements in the method of and in the construction and arrangement of apparatus for Filtering Water and other Liquids," which is more particularly described in the specification and the sheet of drawings which are hereunto annexed; and that they, the said Petitioners, have deposited with the Honorable the Treasurer of the said Colony of New South Wales the sum of Twenty Pounds sterling, for defraying the expense of granting these Letters of Registration, as required by the Act of Council, sixteenth Victoria, number twenty-four; and have humbly prayed that I would be pleased to grant Letters of Registration, whereby the exclusive enjoyment and advantage of the said invention or improvement might be secured to them for a period of fourteen years: And I, being willing to give encouragement to all inventions and improvements in the arts or manufactures which may be for the public good, and having received a report favourable to the prayer of the said Petition, from competent persons appointed by me to examine and consider the matters stated therein and to report thereon for my information, am pleased, with the advice of the Executive Council, and in exercise of the power and authority given to me by the said Act of Council, to grant, and do by these Letters of Registration grant unto the said Prosper Auguste Maignen and Jules Retif, their executors, administrators, and assigns, the exclusive enjoyment and advantage of the said invention or improvement, for and during the term of fourteen years from the date hereof; to have, hold, and exercise unto the said Prosper Auguste Maignen and Jules Retif, their executors, administrators, and assigns, the exclusive enjoyment and advantage thereof, for and during and unto the full end and term of fourteen years from the date of these presents next and immediately ensuing, and fully to be complete and ended: Provided always, that if the said Prosper Auguste Maignen and Jules Retif shall not, within three days after the granting of these Letters of Registration, register the same in the proper office in the Supreme Court, at Sydney, in the said Colony of New South Wales, then these Letters of Registration, and all advantages whatsoever hereby granted, shall cease and become void.

In witness whereof, I have hereunto set my sign manual, and have caused the present Letters of Registration to be sealed with the seal of the said Colony of New South Wales, at Government House, Sydney, in New South Wales, this twenty-sixth day of July, in the year of our Lord one thousand eight hundred and eighty.

[L.S.] AUGUSTUS LOFTUS.

Improvements in Filtering Water and other Liquids.

SPECIFICATION of PROSPER AUGUSTE MAIGNEN, of London, in the county of Middlesex, England, wine merchant, and JULES RETIF, the younger, of Lyons, in the Republic of France, engineer, for an invention entitled "Improvements in the method of and in the construction and arrangement of Apparatus for Filtering Water and other Liquids."

THE said invention consists in improvements in the method of and in the construction and arrangement of apparatus for clarifying and purifying water and other liquids by means of filtration, such improvements allowing of a large area of filtering surface being obtained in an apparatus of small dimensions, whereby the operation of filtering is performed in an economical, efficacious, and expeditious manner, whilst at the same time the cleansing or changing of the filtering surface or medium when necessary can be readily effected.

The case or receptacle in which the apparatus is arranged may be constructed of any desired size or shape, and formed of wood, metal, earthenware, or other suitable material or combination of materials.

The apparatus hereinbefore referred to consists of a rigid frame of any suitable material, such as wood, earthenware, or non-oxidizable metal, and is of any desired size or shape. The said frame is covered in such a manner as to enclose a certain space therewith for the liquid to filter into, which liquid escapes through the exit opening, provided at the bottom with any suitable tissue, felt, or other material, which tissue or other material is also covered or coated with the filtering medium as hereinafter described; or in some cases the said tissue or other material alone is sufficient, for instance when the apparatus is employed for filtering wine lees or liquids of a similar consistency.

It will be well understood that one or more of the above described frames may be employed within the case or receptacle, the said frames being so constructed and arranged as to present a great area of filtering surface to the liquid under treatment, and at the same time to occupy very little space. In all cases where the shape of the frame admits thereof divisions and cross-bars are provided, in order to add strength thereto, to prevent twisting and to assist in maintaining the rigidity of the covering.

The frames are employed by preference in the following manner:—In cases where more than one are used they are arranged parallel to and at a little distance from each other, being maintained in the relative positions at the top by a rack which is pressed down thereon, and the projections on which take into spaces between the frames. Through the lower side of each frame is passed a tube; the lower part of the said tube is fixed in a watertight manner in the aperture in the lower part of the case or receptacle by means of a washer. The said tubes, when the filters are constructed for clarifying valuable liquids, have perforations in the sides which come opposite the ends of longitudinal channels in the before-mentioned lower side of the frame, each division of the latter being placed respectively in communication with the said longitudinal channels by means of smaller channels, thus allowing the filtered liquid contained in the several divisions to pass into the main channels through the perforations in the last-mentioned tube, and thence into a false bottom or reservoir provided for its reception. The lower ends of the tubes for conducting the filtered liquid from the interior of the frame, instead of passing into a false bottom or reservoir as described, may be provided with tap cocks, by which means the filtered liquid may be drawn off directly from the interior of the frames, or conducted by pipes to any desired receptacle.

The said divisions are in some cases made to communicate directly with each other by means of channels, the liquid passing away through the tube which projects or opens into the central divisions.

The filtering medium employed may be of any suitable light nature such as powdered vegetable charcoal, carbonate of magnesia, or paper pulp, and it is deposited firmly and evenly on the coverings of the frames in the following manner:—

The filtering medium is mixed with some of the liquid to be treated, which is then poured into the apparatus. The operation begins immediately, the outlet tap being opened and the supply turned on, a current is established from the exterior to the interior of the frame, and, the liquid passing through the pores of the tissue, leaves the floating particles of the filtering medium to form a perfectly even and close deposit over the whole surface of the exterior of the covering. This deposit or layer of filtering medium which completes the straining power of the tissue intercepts all impurities mechanically suspended in the liquid.

When the apparatus is employed for filtering water an air-pipe is introduced through the top of the frame, for the purpose of admitting air to the interior thereof. The said pipe has a receptacle for holding cotton wool or similar material, to purify the air as it passes through the same. The air so admitted comes into contact with the minute drops of water as they issue through the felt or other tissue, and imparts oxygen to the water, which is thereby thoroughly aerated.

The lower part of the case or receptacle, which is for the reception of the filtered liquid, may be placed in communication with the external atmosphere by means of a pipe.

The nature of the tissue or other material, and also that of the filtering medium, is varied according to the requirements of the liquid to be treated.

The case or receptacle containing the filtering apparatus may, if desired, be placed in an outer casing or jacket, between the interior of which and the exterior of the receptacle can be introduced steam, hot water, ice, or other suitable medium for raising, lowering, or regulating the temperature of the liquid under treatment.

The case containing the apparatus is, by preference, provided with a cover; and when the operation of filtering is to be conducted by means of pressure the said cover is strongly and hermetically secured to the case, and is provided with a valve for the exit of air during the process of filling the case, and also a suitable arrangement for the introduction of the liquid, the pressure being obtained by hydraulic or other suitable power as is well known and understood.

The case or receptacle may be provided with tubes or gauges for showing the level of the liquid in the interior.

When the liquid to be filtered is conducted to the apparatus from a cistern, reservoir, or other receptacle by means of a pipe, the exit end of the said pipe is provided with a ball-cock or other automatic contrivance, in order to regulate the supply of such liquid.

Improvements in Filtering Water and other Liquids.

A perforated plate or screen of suitable construction to allow the liquid to pass through is in some cases placed within the case above the frames, in order to prevent the force of liquid from disturbing the filtering medium.

When the liquid to be treated requires to be discoloured or freed from noxious substances held in solution, the space above and around the frame, or between, above or around the frames, as the case may be, is filled with loose animal charcoal, "carferal," spongy iron, or other energetic purifying medium.

When the apparatus is employed for filtering hard water which has been treated for the purpose of softening the same by what is known as "Clarke's process," that is to say, when the carbonate of lime has been precipitated by the introduction of a clear solution of lime into the water, such carbonate of lime, which exists in the form of minute particles, can be utilized as the filtering medium by causing it to be deposited on the coverings of the frames, by allowing the water to flow through the frames as hereinbefore described.

The covers of the frames may be cleansed by forcing liquid through them the reverse way, that is to say, from the interior to the exterior, or the said covers may be unlaced or otherwise detached, and then cleansed.

We will now proceed to refer to the accompanying drawings from which our said invention will be more clearly understood.

Figure 1 shows a case or receptacle, in which are arranged sixteen filtering frames. Figure 2 is a section of the same with one of the frames uncovered. Figure 3 is a cross section of a frame. Figure 4 shows an apparatus in which one frame only is employed, and figure 5 represents a case or receptacle in which a frame of a circular section is arranged, the said frame being shown with a series of circular apertures for the liquid to pass through, but the said apertures may be of any desired size and shape; an air tube with the receptacle for cotton wool is also shown. The same letters of reference indicate similar parts in all the figures. A is the case or receptacle; B, the frames; *b*, the division in the latter; b^1, the covering; b^2, the pipe for the escape of the filtered liquid; C is the reservoir for receiving the latter; D is the rack for keeping the frames in their relative positions, and the plate or screen for breaking the force of the liquid is shown at E; F is the air tube, and *f*, receptacle for the cotton wool.

Although certain methods of arranging the frame or frames within the case or receptacle have been hereinbefore described, and are illustrated in the accompanying drawings, it is not intended to restrict this invention to those particular methods, as the frames may be arranged within the case or receptacle in any similar or suitable manner.

We claim as our invention—

First—The construction of the rigidly covered filtering frames B, having the aperture for the escape of the filtered liquid at the bottom, and in which the liquid is filtered by passing from the exterior to the interior, substantially as hereinbefore described and set forth, and

Secondly—The method of filtering liquids by causing the filtering medium previously held in suspension by the liquid under treatment to be deposited on the coverings b^1 of the frames B, substantantially as and for the purposes hereinbefore described and set forth.

In witness whereof we, the said Prosper Auguste Maignen and Jules Retif, have hereunto set our hands and seals, this twenty-eighth day of April, 1880.

Witness—
GEO. E. VAUGHAN,
67, Chancery-lane, London.

P. A. MAIGNEN.
JS. RETIF FILS.

This is the specification referred to in the annexed Letters of Registration granted to Prospe Auguste Maignen and Jules Retif, this twenty-sixth day of July, A.D. 1880.

AUGUSTUS LOFTUS.

REPORT.

Sir,

Sydney, 24 June, 1880.

The application of Messrs. Maignen and Retif for Letters of Registration for "Improvements in the method of and in the construction and arrangement of Apparatus for Filtering Water and other Liquids" having been referred to us, we have examined the specification and drawings accompanying the same, and have now the honor to report that we see no objection to the issue of Letters of Registration as prayed for.

We have, &c.,
J. SMITH.
CHAS. WATT.

The Principal Under Secretary.

[Drawings—one sheet.]

Figure 4.

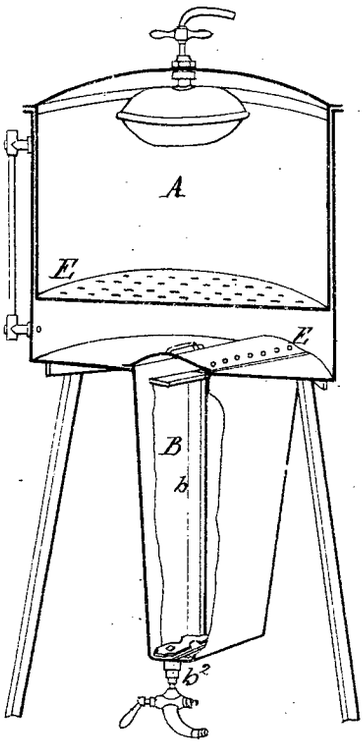

Figure 3.

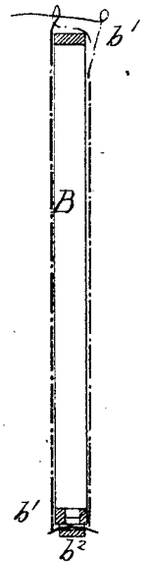

Figure 5.

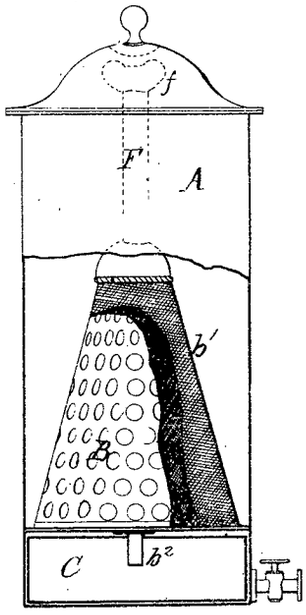

Figure 2.

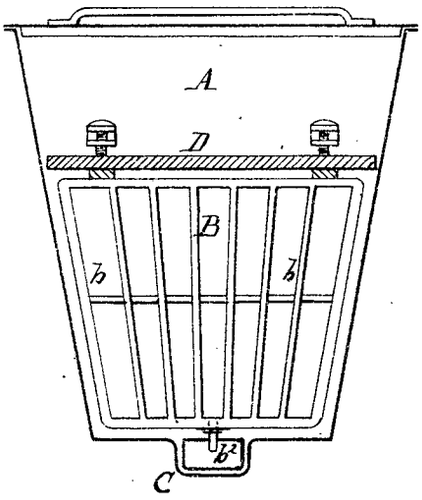

Figure 1.

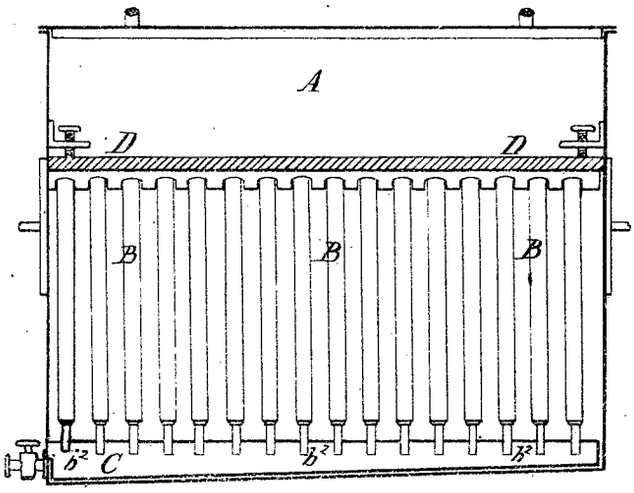

This is the Sheet of Drawings referred to in the annexed Letters of Registration granted to Rosbow Auguste Maignen and Jules Retif this Twenty Sixth day of July A.D. 1880 — (Sig. 357-)

Augustus Softius

PHOTO-LITHOGRAPHED AT THE GOVT. PRINTING OFFICE.
SYDNEY, NEW SOUTH WALES.

A.D. 1880, 26*th July*. No. 855.

IMPROVEMENTS IN TELEPHONES.

LETTERS OF REGISTRATION to Francis Blake, for Improvements in Telephones.

[Registered on the 27th day of July, 1880, in pursuance of the Act 16 Vic. No. 24.]

BY His Excellency the Right Honorable Sir Augustus William Frederick Spencer Loftus (commonly called Lord Augustus Loftus), Knight Grand Cross of the Most Honorable Order of the Bath, a Member of Her Majesty's Most Honorable Privy Council, Governor and Commander-in-Chief of the Colony of New South Wales and its Dependencies.

TO ALL TO WHOM THESE PRESENTS SHALL COME, greeting:

WHEREAS Francis Blake, of Weston, Massachusetts, United States of America, hath by his Petition humbly represented to me that he is the author or designer of a certain invention or improvement in manufactures, that is to say, of an invention entitled "Improvements in Telephones," which is more particularly described in the specification and the sheet of drawings which are hereunto annexed; and that he, the said Petitioner, hath deposited with the Honorable the Treasurer of the said Colony of New South Wales the sum of Twenty Pounds sterling, for defraying the expense of granting these Letters of Registration, as required by the Act of Council, sixteenth Victoria, number twenty-four; and hath humbly prayed that I would be pleased to grant Letters of Registration, whereby the exclusive enjoyment and advantage of the said invention or improvement might be secured to him for a period of fourteen years: And I, being willing to give encouragement to all inventions and improvements in the arts or manufactures which may be for the public good, and having received a report favourable to the prayer of the said Petition, from competent persons appointed by me to examine and consider the matters stated therein and to report thereon for my information, am pleased, with the advice of the Executive Council, and in exercise of the power and authority given to me by the said Act of Council, to grant, and do by these Letters of Registration grant unto the said Francis Blake, his executors, administrators, and assigns, the exclusive enjoyment and advantage of the said invention or improvement, for and during the term of fourteen years from the date hereof; to have, hold, and exercise unto the said Francis Blake, his executors, administrators, and assigns, the exclusive enjoyment and advantage thereof, for and during and unto the full end and term of fourteen years from the date of these presents next and immediately ensuing, and fully to be complete and ended: Provided always, that if the said Francis Blake shall not, within three days after the granting of these Letters of Registration, register the same in the proper office in the Supreme Court, at Sydney, in the said Colony of New South Wales, then these Letters of Registration, and all advantages whatsoever hereby granted, shall cease and become void.

In witness whereof, I have hereunto set my sign manual, and have caused the present Letters of Registration to be sealed with the seal of the said Colony of New South Wales, at Government House, Sydney, in New South Wales, this twenty-sixth day of July, in the year of our Lord one thousand eight hundred and eighty.

[L.S.] AUGUSTUS LOFTUS.

Improvements in Telephones.

SPECIFICATION of FRANCIS BLAKE, of Weston, Massachusetts, United States of America, for an invention entitled "Improvements in Telephones."

ONE part of the improvements has reference to a method of holding the diaphragm of a telephone so that it will be free to expand or contract without altering its form.

Other parts of the said improvements relate to that form of transmitting telephones in which the undulations or variations in the strength of an electric current, necessary for reproducing sounds in a receiving instrument, are produced by varying the resistance of the circuit through changes of pressure between two electrodes of the circuit. As heretofore constructed, one of the electrodes in such instruments is held in a fixed position, while the other, being free to move to some extent, is constantly held in contact with such fixed electrode, and is pressed against it with greater or less force by the vibrations of the diaphragm with which it is connected. In using an instrument of this form, it has been found necessary to adjust the initial static pressure between its electrodes with great care and delicacy, in order to secure such a variation of resistance between them, under the variations of the diaphragm, as will enable the current to reproduce in a receiving instrument the sounds which fall upon the transmitting instrument. When such an adjustment has been secured, it is easily disturbed by slight causes such as a change in the temperature of the instrument, or a trifling movement of some of its parts in relation to other parts.

By this invention the proper adjustment is easily secured, and is not liable to be disturbed in the practical use of the instruments. I support both electrodes in such a manner that they can move freely with the diaphragm. One of them may be attached directly to and be supported by the diaphragm, although I prefer to support it in contact with the diaphragm but by an independent support. The other electrode is so supported as to move freely, but is made so heavy, or is so weighted, that by its inertia it will offer a resistance to the slight and quick vibrations of the diaphragm, which will give a varying pressure between the electrodes and a consequent change in the resistance of the circuit. This second electrode is so supported that the initial static pressure between the two will not be sensibly affected by a change of temperature within the ordinary range of temperature to which such instruments are exposed. It is placed on the end of a spring whose other end is connected to a lever, by means of which the proper initial pressure between the electrodes and against the diaphragm is obtained.

To secure contact between the electrodes independently of the pressure against the diaphragm, I support the one next to the diaphragm upon a spring, which exerts its pressure against the opposite electrode.

DESCRIPTION OF THE DRAWING.

Figure 1 is a plan of the mechanisms attached to the top or cover of a box. Figure 2 is a section of the said box and mechanism on the line *x x*, figure 1, and showing one of the screw-cups for making connections with the exterior circuits. Figure 3 is a transverse section of the said box and mechanism on the line $x^1 x^1$, figures 1 and 2, and showing the screw-cups for making connections with the exterior circuits.

A represents the box or casing in which the mechanism of the telephone embracing my improvements is enclosed. This mechanism is for convenience attached to the cover or top A^1 of the said box.

B represents a metal ring or frame for holding the mechanism of the telephone. It is screwed to the cover A^1 as shown, and has two ears, B^1 B^2. On the inner surface of the ring B is a narrow ledge or lip, *b*, on which the disc or diaphragm C is placed. This diaphragm is formed as usual of a thin iron plate. A lining of paper or other suitable material is placed between it and the ledge or lip *b*, and it is held in place by two springs D D attached to the metal rim or ring B, with their free ends pressing upon the back of the diaphragm near its centre so as to hold it against the ledge. Thin pads of india-rubber, *a a*, are placed between the ends of the springs and the diaphragm. By this method of holding the diaphragm in place, it is less liable to be distorted by a change of temperature than when held wholly at its circumference. The centre of the ring and diaphragm is opposite the orifice E in the cover A^1, through which the sounds enter the instrument. On the other side of the diaphragm, and at its centre, is placed one of the electrodes; it is a small metal bar, *e*, one end of which rests against the said diaphragm. The other end is brought nearly to a point, and is in contact with the other electrode e^1. It is desirable that it should be formed of or plated with some metal like platinum or nickel which is not easily corroded. It may be attached directly to the diaphragm, but I prefer to support it independently as shown upon a light spring *c*, which tends to press it away from the diaphragm and towards the opposite electrode *e*.

This method of supporting the electrode *e* ensures its contact with the other electrode under some circumstances, when otherwise they would be liable to be separated and the circuit broken.

The electrode e^1 is formed on a weighted spring, *d*, supported on an adjusting lever, F, by which the tension of the spring is regulated. This spring must be stronger than the spring *c*, which supports the electrode *e*, and from its greater strength it tends to keep the electrode *e* in contact with the diaphragm. It may be made of a piece of a common watch-spring, and carries at its free end a weight, *g*, heavy enough to check very greatly the rate of vibration of the spring. This weight may be of metal, which may serve directly as the electrode but better results are obtained by applying to it at the point of contact with the other electrode a piece of gas-coke or a hard-pressed block of carbon, *h*, such as is used in electric lighting. The employment of the coke or carbon does not, however, constitute a part of my invention, farther than it contributes a portion of the weight carried by the spring. If the weight is a non-conductor, there must be a metallic conductor between the carbon or other electrode used and the spring or some other part of the circuit. The weight must be proportioned to the stiffness of the spring, a stiff spring requiring a heavier weight than a weaker one. The adjusting lever F, to an arm of which one end of the spring *d* is attached, is a stiff bar connected at one end by a stiff spring *j* to the ear B^1 of the ring B. The other end rests upon an adjusting screw G, placed in the ear B^2 on the opposite side of the ring. The spring *j* tends to force the lever F away from the diaphragm and against the adjusting screw G. The ear B^2, supporting the adjusting screw G, is drilled and slotted as shown in figures 1 and 2, to prevent the screw from wearing loose.

The part of the lever F which comes in contact with the screw is inclined to the axis of the screw as shown, so that when the screw is forced inward it will press the lever towards the diaphragm, and when it is withdrawn the lever will, by the tension of the spring *j*, be forced away from the diaphragm. The outer end of the screw extends into a hole, *l*, through the casing, and is fitted to receive a key by which it can be turned to adjust the lever to a desired position. The

Improvements in Telephones.

The pressure between the two electrodes and against the diaphragm obviously depends upon the position given to the adjusting lever by the adjusting screw G, but it is obvious that as this pressure can be increased or diminished only by increasing or diminishing the tension of the spring *d*, the changes in the pressure by turning the screw will be much less rapid than they would be if the electrode were acted upon directly by the lever or the adjusting screw. Hence a proper adjustment of the initial static pressure between the electrodes can be much more easily obtained through the agency of the spring *d* than without it. It will also be seen that this pressure will not be sensibly affected by any slight change in the position of the electrodes which might arise from the expansion or contraction of any part of the apparatus under a change of temperature. On the other hand, it will be seen that if the diaphragm is thrown into the rapid but slight vibrations caused by sounds, the spring alone would yield to them so readily as to give but little change of pressure between the electrodes within the range of the vibrations, but by reason of the inertia of the weight the tendency of a spring to follow the vibrations of the diaphragm will be checked, and a greater range of pressures between the electrodes will be obtained. At the same time, it will be readily seen that the changes of pressure will be very different from what they would be if the electrode were supported rigidly and could not yield to the movements of the diaphragm.

The main object of my improvements will be obtained even when the electrode *e* is attached directly to the diaphragm, but an additional improvement is gained by supporting that electrode on the afore light or independent spring, which keeps it in contact with the electrode e^1; for it not unfrequently happens, when the intermediate electrode is attached directly to the diaphragm, that a too rapid vibration of the diaphragm or some other disturbance in its vibrations will throw the outer electrode out of contact with the intermediate electrode and thus break the circuit, but in my construction such irregular vibrations of the diaphragm will separate the diaphragm from the intermediate electrode *e*, rather than separate the two electrodes from each other, and the circuit will not be broken.

For convenience in construction when employing the independent spring C for the purpose stated, I attach it to the same arm of the adjusting lever F to which the spring *d* is attached, the two springs being separated by a piece of insulating substance, *r*, but the spring *c* might be attached to any convenient portion of the instrument if properly insulated.

The wires for connecting this instrument with the receiving telephone are marked *w* and w^1. I have, however, shown them as connected with the primary circuit of an induction coil, I, in connection with which are the screw-cups s s^1 leading to the battery, while s^2 s^3 are screw-cups for connecting the line wires with the secondary circuit of the coil I.

The use of the induction coil is not essential, and the wires may go at once to the receiving instrument. The wire *w* is connected directly with the spring arm *c* of the electrode *e*, as shown in figure 2. The wire w^1 is connected with one of the ears of the ring B, as shown in figure 1, which is in metallic connection with the electrode e^1, as shown in figure 2.

CLAIMS.

First—The method herein described for holding the diaphragm of a telephone by means of springs pressing against one of its surfaces.

Second—A spring forming or carrying one electrode of the circuit of a telephone, and constantly pressing against the other electrode and diaphragm, to maintain the required initial pressure between the electrodes and yield to the movement of the diaphragm, substantially as above described.

Third—The adjusting lever for regulating the tension of the spring which carries one of the electrodes, and the initial pressure between the two electrodes and against the diaphragm, substantially as herein described.

Fourth—The combination of the two electrodes by means of springs acting against each other substantially as described, to maintain the electrodes in contact when forced away from the diaphragm.

Fifth—The yielding weight connected with the movable electrode e^1 to resist the movement of the diaphragm, and modify by its inertia the variation of pressure between the two electrodes, substantially as above described.

In witness whereof, I, the said Francis Blake, have hereto set my hand and seal, this sixteenth day of April, 1880.

Witness—
JOHN T. KNOWLES.

FRANCIS BLAKE.

This is the specification referred to in the annexed Letters of Registration granted to Francis Blake, this twenty-sixth day of July, A.D. 1880.

AUGUSTUS LOFTUS.

REPORT.

Sir,

Sydney, 26 June, 1880.

The application of Mr. Francis Blake, for Letters of Registration for "Improvements in Telephones" having been referred to us, we have examined the specification and drawings accompanying the same, and have now the honor to report that we see no objection to the issue of Letters of Registration as prayed for.

We have, &c.
J. SMITH.
E. C. CRACKNELL.

The Principal Under Secretary.

[Drawings—one sheet.]

Fig 3

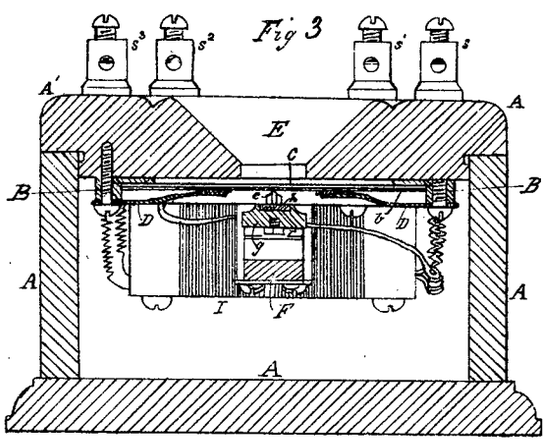

Fig 2.

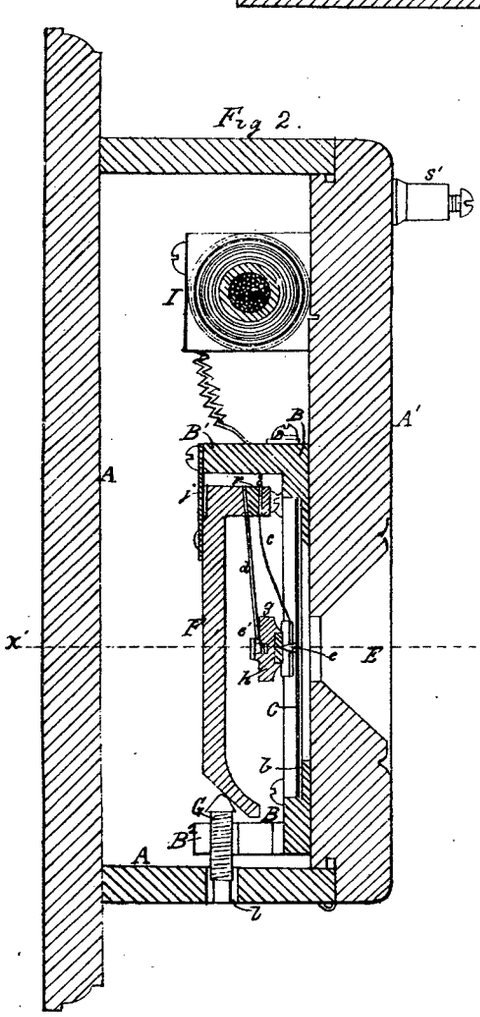

Fig 1

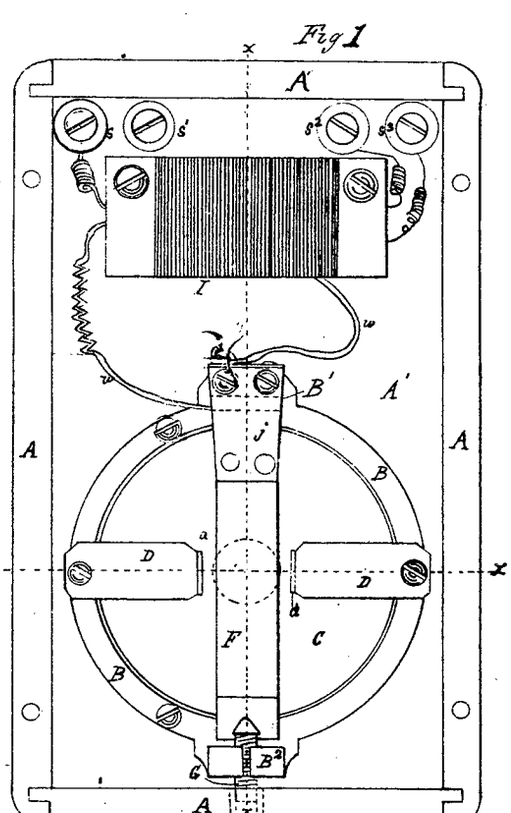

This is the Sheet of Drawings referred to in the annexed Letters of Registration, granted to Francis Blake, this twenty sixth day of July, A.D. 1880. Augustus Loftus.

PHOTO-LITHOGRAPHED AT THE GOVT. PRINTING OFFICE, SYDNEY, NEW SOUTH WALES.

A.D. 1880, 26*th July.* No. 856.

SAMWELLS' PATENT TWO-WHEELED BROUGHAM.

LETTERS OF REGISTRATION to Henry Samwells, for Improvements in the construction of a certain description of Vehicle.

[Registered on the 27th day of July, 1880, in pursuance of the Act 16 Vic. No. 24.]

BY His Excellency the Right Honorable Sir Augustus William Frederick Spencer Loftus (commonly called Lord Augustus Loftus), Knight Grand Cross of the Most Honorable Order of the Bath, a Member of Her Majesty's Most Honorable Privy Council, Governor and Commander-in-Chief of the Colony of New South Wales and its Dependencies.

TO ALL TO WHOM THESE PRESENTS SHALL COME, greeting:

WHEREAS Henry Samwells, of Flinders-lane East, in the city of Melbourne and Colony of Victoria, coach-builder, hath by his Petition humbly represented to me that he is the author or designer of a certain invention or improvement in manufactures, that is to say, of an invention entitled "Improvements in the construction of a certain description of Vehicle," which is more particularly described in the amended specification and the sheet of drawings which are hereunto annexed; and that he, the said Petitioner, hath deposited with the Honorable the Treasurer of the said Colony of New South Wales the sum of Twenty Pounds sterling, for defraying the expense of granting these Letters of Registration, as required by the Act of Council, sixteenth Victoria, number twenty-four; and hath humbly prayed that I would be pleased to grant Letters of Registration, whereby the exclusive enjoyment and advantage of the said invention or improvement might be secured to him for a period of fourteen years: And I, being willing to give encouragement to all inventions and improvements in the arts or manufactures which may be for the public good, and having received a report favourable to the prayer of the said Petition, from competent persons appointed by me to examine and consider the matters stated therein and to report thereon for my information, am pleased, with the advice of the Executive Council, and in exercise of the power and authority given to me by the said Act of Council, to grant, and do by these Letters of Registration grant unto the said Henry Samwells, his executors, administrators, and assigns, the exclusive enjoyment and advantage of the said invention or improvement, for and during the term of fourteen years from the date hereof; to have, hold, and exercise unto the said Henry Samwells, his executors, administrators, and assigns, the exclusive enjoyment and advantage thereof, for and during and unto the full end and term of fourteen years from the date of these presents next and immediately ensuing, and fully to be complete and ended: Provided always, that if the said Henry Samwells shall not, within three days after the granting of these Letters of Registration, register the same in the proper office in the Supreme Court, at Sydney, in the said Colony of New South Wales, then these Letters of Registration, and all advantages whatsoever hereby granted, shall cease and become void.

In witness whereof, I have hereunto set my sign manual, and have caused the present Letters of Registration to be sealed with the seal of the said Colony of New South Wales, at Government House, Sydney, in New South Wales, this twenty-sixth day of July, in the year of our Lord one thousand eight hundred and eighty.

[L.S.] AUGUSTUS LOFTUS.

SPECIFICATION

Samwells' Patent Two-wheeled Brougham.

SPECIFICATION of HENRY SAMWELLS, of Flinders-lane East, in the city of Melbourne and Colony of Victoria, coach-builder, for an invention entitled "Improvements in the construction of a certain description of Vehicle."

THIS invention relates to a novel description of vehicle, which partakes partly of the character of a "Brougham" and partly of that of a "Hansom Cab," and which I call a Two-wheeled Brougham. Its similarity to both these vehicles will be seen on reference to the drawings hereto attached, where figure 1 represents a side elevation of one of these two-wheeled broughams; figure 2, plan; figure 3, back elevation; and figure 4, front elevation. A is the body of the vehicle, having two doors B hinged at B^1; C is the seat inside the carriage, and D is the driver's seat; underneath this latter is a boot, D^1; D^2 are supports or stays descending therefrom and attached to wooden bar E, to which is attached the back spring F. This back spring is attached by shackles at F^1 to side springs G, which reach to iron supports H, bolted to the carriage, and are also supported on the axle as shown. If preferred these iron supports H may be dispensed with, and a fourth spring introduced connecting together the two side springs just under the seat of the carriage. The shafts J are supported by iron rods, J^1, proceeding from underneath the front part of the carriage, and also by means of iron stays, J^2, which are bolted to the front framing of the carriage after it has been stiffened by the introduction of flat steel bars let into it edgewise. These bars are let into the framing just where the stays J^2 are fastened to the carriage. A leather splashboard is used similar to that in hansom cabs. The carriage can be entered from steps K on either side, the door opening as far as the wheel (see figure 2), and being kept from knocking against it by means of an iron plate or guard B^2 at the bottom. The windows can be made fixed or movable as in an ordinary brougham. By this method of construction I can produce a carriage which has all the advantages of a brougham and a hansom cab combined.

I claim as my invention,—

The method of supporting and staying the shafts J by means of rods J^1 and stays J^2 in combination with the flat steel bar let into the framing, substantially as herein described and explained.

In witness whereof, I, the said Henry Samwells, have hereto set my hand and seal, this seventeenth day of June, one thousand eight hundred and eighty.

H. SAMWELLS.

Witness—
W. S. BAYSTON,
Clerk to Edward Waters, Patent Agent, Melbourne.

This is the amended specification referred to in the annexed Letters of Registration granted to Henry Samwells, this twenty-sixth day of July, A.D. 1880.

AUGUSTUS LOFTUS.

REPORTS.

Sir, Sydney, 1 May, 1880.

The application of Mr. Henry Samwells for Letters of Registration for "Improvements in the construction of a certain description of Vehicle" having been referred to us for report, we have examined the specification and drawings accompanying the same, and have now the honor to report that it is not clear from the specification whether Mr. Samwells applies for a patent for the proposed method of attaching the shafts to the body and for the arrangement of the springs or for the shape of the body of the vehicle also. The latter does not appear to us to be any novelty; vehicles of the kind (though perhaps not altogether similar) have been built in Sydney. It might be desirable therefore to communicate with Mr. Samwells upon this point for further explanation.

The springs proposed are similar to the plan always followed in the construction of hansom cabs, except that the portion of the springs from the axle to H (*vide* drawing) is shortened. Usually a complete spring is fixed to the axle, shackled to the hind spring at one end and to a scroll affixed to the body at the other.

Mr. Samwells should, we think, be asked to explain his alleged invention further on this point also.

There can, we think, be no objection to the patent for the arrangements for fixing the shafts to the body of the vehicle.

We have, &c.,
EDMUND FOSBERY.
CHARLES COWPER.

The Principal Under Secretary.

Sir, Sydney, 22 May, 1880.

Since writing our former report, dated the 1st instant, we have carefully inspected a vehicle constructed in accordance with Mr. Samwells' plan and specification accompanying his original application for letters patent.

We are unable to see that a patent can be claimed for any specialty beyond the (first) item in the specification which we have already reported as unobjectionable.

The second claim for patent, that the front of the vehicle is the "shape of an arc of a circle," should not we consider be entertained, as the shape alone is a very common one.

The

Samwells' Patent Two-wheeled Brougham.

The third claim for patent is based upon a different ground to that put forward in the original specification, by which it was proposed to hang the doors to the side framing of the vehicle, now varied by the "better method" of hinging them to the front steel strengthened pillar. We do not know whether an application for a patent can be amended in a material particular such as this; but in any case we are of opinion that the side of the framing of a vehicle to which a door is hinged is not a novelty for which a patent should be issued.

We have, &c.,
EDMUND FOSBERY.
CHARLES COWPER.

The Principal Under Secretary.

Sir,

Sydney, 26 June, 1880.

Having considered the amended application from Mr. Henry Samwells, for a patent for certain improvements in "the method of supporting and staying the shafts of a vehicle of a Two-wheeled Brougham or Hansom Cab," we have the honor to report that we see no objection to the issue of a patent for the same.

We have, &c.,
EDMUND FOSBERY.
CHARLES COWPER.

The Principal Under Secretary.

[Drawings—one sheet.]

HY. SAMWELLS' PATENT.

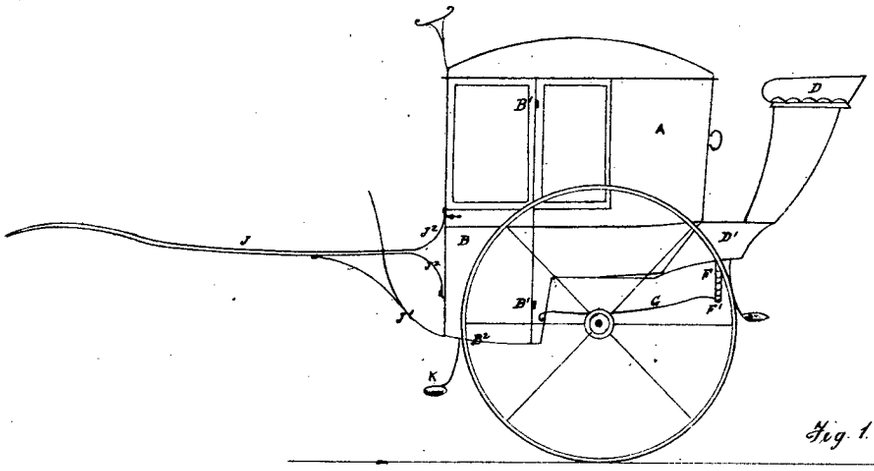

Fig. 1.

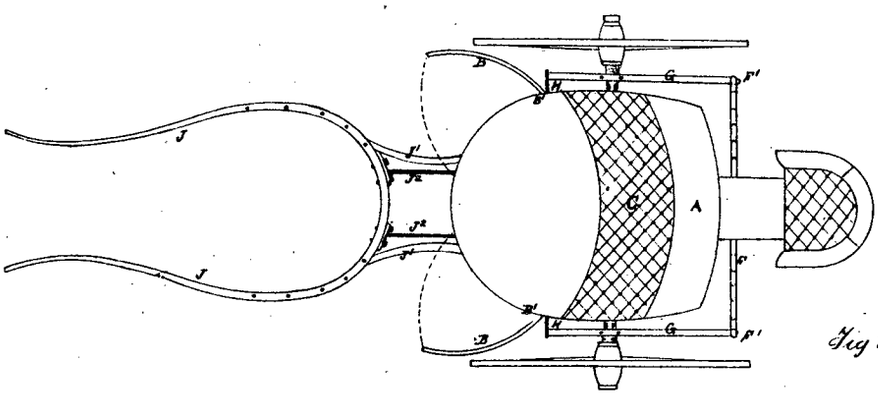

Fig 2.

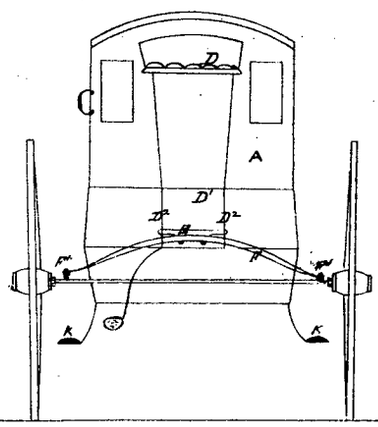

Fig 3.

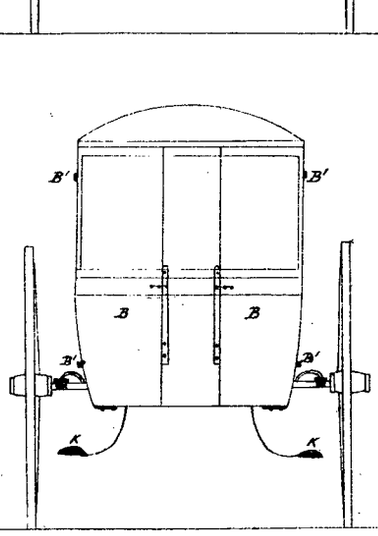

Fig 4.

This is the Sheet of Drawings referred to in the annexed Letters of Registration, granted to Henry Samwells, this twenty-sixth day of July, A.D. 1880.

Augustus Loftus.

PHOTO-LITHOGRAPHED AT THE GOV'T. PRINTING OFFICE,
SYDNEY, NEW SOUTH WALES.

A.D. 1880, 26*th July*. No. 857.

IMPROVEMENTS IN THE UTILIZATION OF ELECTRICITY.

LETTERS OF REGISTRATION to Thomas Alva Edison, for Improvements in the utilization of Electricity for light, heat, and power,—being an improved system and means for the generation, measurement, and translation of Electricity into light, heat, or power.

[Registered on the 27th day of July, 1880, in pursuance of the Act 16 Vic. No. 24.]

BY His Excellency the Right Honorable Sir Augustus William Frederick Spencer Loftus (commonly called Lord Augustus Loftus), Knight Grand Cross of the Most Honorable Order of the Bath, a Member of Her Majesty's Most Honorable Privy Council, Governor and Commander-in-Chief of the Colony of New South Wales and its Dependencies.

TO ALL TO WHOM THESE PRESENTS SHALL COME, greeting:

WHEREAS Thomas Alva Edison, of Menlo Park, in the State of New Jersey, United States of America, electrician, hath by his Petition humbly represented to me that he is the author or designer of a certain invention or improvement in manufactures, that is to say, of an invention entitled "Improvements in the utilization of Electricity for light, heat, and power,—being an improved system and means for the generation, measurement, and translation of Electricity into light, heat, or power," which is more particularly described in the specification, marked A, and the two sheets of drawings, marked B and C respectively, which are hereunto annexed; and that he, the said Petitioner, hath deposited with the Honorable the Treasurer of the said Colony of New South Wales the sum of Twenty pounds sterling, for defraying the expense of granting these Letters of Registration, as required by the Act of Council, sixteenth Victoria, number twenty-four; and hath humbly prayed that I would be pleased to grant Letters of Registration, whereby the exclusive enjoyment and advantage of the said invention or improvement might be secured to him for a period of fourteen years: And I, being willing to give encouragement to all inventions and improvements in the arts or manufactures which may be for the public good, and having received a report favourable to the prayer of the said Petition, from competent persons appointed by me to examine and consider the matters stated therein and to report thereon for my information, am pleased, with the advice of the Executive Council, and in exercise of the power and authority given to me by the said Act of Council, to grant, and do by these Letters of Registration grant unto the said Thomas Alva Edison, his executors, administrators, and assigns, the exclusive enjoyment and advantage of the said invention or improvement, for and during the term of fourteen years from the date hereof; to have, hold, and exercise unto the said Thomas Alva Edison, his executors, administrators, and assigns, the exclusive enjoyment and advantage thereof, for and during and unto the full end and term of fourteen years from the date of these presents next and immediately ensuing, and fully to be complete and ended: Provided always, that if the said Thomas Alva Edison shall not, within three days after the granting of these Letters of Registration, register the same in the proper office in the Supreme Court, at Sydney, in the said Colony of New South Wales, then these Letters of Registration, and all advantages whatsoever hereby granted, shall cease and become void.

In witness whereof, I have hereunto set my sign manual, and have caused the present Letters of Registration to be sealed with the seal of the said Colony of New South Wales, at Government House, Sydney, in New South Wales, this twenty-sixth day of July, in the year of our Lord one thousand eight hundred and eighty.

[L.S.]

AUGUSTUS LOFTUS.

Improvements in the utilization of Electricity.

A.

SPECIFICATION.

TO ALL WHOM IT MAY CONCERN: Be it known that I, THOMAS ALVA EDISON, of Menlo Park, in the State of New Jersey, United States of America, electrician, have invented certain new and useful improvements in the utilization of electricity for light, heat, and power, being an improved system and means for the generation, measurement, and translation of electricity into light, heat, or power.

The object of this invention is to so arrange a system for the generation, supply, and consumption, for either light or power or both of electricity, that all the operations connected therewith requiring special care, attention, or knowledge of the art shall be performed for many consumers at central stations, leaving the consumer only the work of turning off or on the supply as may be desired; in other words, to so contrive means and methods that electricity may be supplied for consumption in a manner analogous to the system for the supply of gas and water, without requiring any greater care or technical knowledge on the part of the consumer than does the use of gas or water, in order that economy, reliability, and safety may be insured.

In carrying the invention into effect, a city, town, village, or locality may form one district, or if the extent of territory makes it desirable may be divided into several districts. In each district I provide a central station, at which are grouped a suitable prime motor, or several motors, dependent upon the amount to be supplied, generators or means for converting the prime motive force into electricity, means for determining the amount of electricity generated and supplied, in order that a constant pressure of electricity (so to speak) may be kept up.

The prime motors are any suitable engines, steam or water, and one or a series of two or more are provided as may be necessary, each of which is provided with its own system of shafting and belting, driving driving a number of magneto-electric machines, the number actuated by one prime motor being hereinafter termed a battery.

It is to be noted that I make my field of force magnets exceedingly long and of an extremely large mass of metal in proportion to the mass of metal in the revolving armature conveying the generating coil. By this extra length, as the magnetic tension at the poles increases with their distance apart, there is secured at the polar extensions acting upon the coils in the revolving armature a much greater magnetic intensity, or so to speak a greater magneto motive force or pressure, causing consequently the generation of a greater amount of energy in the coils operated upon than would result from the use of shorter magnets even though the same mass of metal were used therein. By this elongation of the cores I am enabled to dispense with a number of layers of coils, as one layer of wire is usually sufficient, whereby the resistance of the machine is largely diminished.

The large mass of these magnet cores is magnetically saturated by a weak current passing around them. It takes this weak current a long time to bring the mass of metal up to the point of practical maximum magnetic intensity, but, once brought to that point, the weak current readily keeps them there; while with a shorter magnet a stronger current would more speedily magnetically saturate them, this stronger current would still be required to keep them so saturated.

If the coils of the field of force magnets and the generating coils were included in one circuit, and all the current generated was passed through the coils of the field magnet, a very much greater amount of current than necessary for the maintenance of a practical magnetic maximum in the field of force magnets would be passed around them, and the coils acting as resistances to the energy in excess of that required to magnetise the magnet to its practical maximum, would cause a great waste of electric energy. Hence I prefer to keep the coils of the field of force magnets and the generating coils separate, and that one machine in each battery (which machine may be termed the battery field of force generator) be used to supply the requisite energy to the field of force magnets of the other machine in such battery (which may be termed the supply generator).

The coils of the field of force magnets are connected as a series or in multiple arc in one circuit, while the generating coils of the supply generators of each battery are each and all connected in a multiple arc to the main conductors, though for special purposes they may be connected as a series.

This arrangement insures great economy, as the per cent. of the entire current generated in each battery absorbed in keeping up the magnetic maximum in the field of force magnets when it is furnished by one special machine of the battery, the number given it to feed being properly calculated, being less than when a portion of the current generated in each machine is absorbed in its own field of force magnets.

Where a single battery of machines is used it is preferable, in view of what has been hereinbefore stated, for the current to the coils of the field of force magnets of the battery generators to be supplied by a small galvanic battery, but if more than one battery of machines be used, the field of force generators of all the batteries are fed from one or more prime field of force generators connected in a multiple arc, or in a series, the field of force magnets of the prime field of force generator or generators used being kept magnetically saturated by a weak galvanic battery current as before set forth.

For instance, a weak galvanic current supplies the field current necessary for one prime field of force generator, which in turn feeds the field of force magnets of the field of force generators of ten batteries of twenty or thirty machines, the ultimate effect in the generation of current depending upon (as one important factor) the tension of the galvanic current sent through the field of force coils of the prime field of force generators.

The prime field of force generators may however be a dynamo-electric machine instead of a magneto machine, its field of force being kept up by the current generated in the machine instead of by a galvanic current.

At the central stations all the supply generating coils or batteries thereof are connected to conductors on the multiple arc system, and from these conductors at the station main conductors (which for convenience may simply be called the mains) connected thereto, also on the multiple arc system, lead in any and all desired directions for conveying the energy to the points where work either by translation into light or motive power is to be done.

In

Improvements in the utilization of Electricity.

In order to give a better understanding of the method of regulating what for convenience may be called the pressure of the current through the entire system, I will here state that all the devices for translation of electricity are arranged on the multiple arc system, each device being in its own derived circuit, the effect being in substance to give each a circuit from the generating source independent of the circuit of all the other devices. As a resultant, it follows that the greater the number of translating devices brought into circuit the less the total resistance of the circuit.

For instance, I prefer that my lamps shall each be of about 100 ohms resistance, then if one lamp only be in circuit there is a resistance of 100 ohms; if another lamp be put in circuit, two circuits each of 100 ohms are provided for the current, making the net total resistance to the current fifty ohms, although the resistance in each derived circuit remains unchanged. This effect is the opposite of the effect produced by the addition of lamps when they are connected in an ordinary straight circuit, each one then adding to the resistance of the circuit.

The bringing into operation successively of numbers of the devices and thereby making more paths or circuits for the current does not appreciably lessen the pressure or diminish the effect upon the devices in use, the active force at the central station, viz., prime field of force generators and motive power remaining unchanged until the net resistance of the devices in circuit exterior to the battery of machines is so diminished as to approach in a degree the resistance of the battery and main conductors, it being remembered that as the machines of a battery are connected in multiple arc, the net internal resistance of a battery is as many times less than one machine as there are machines in the battery.

To avoid any appreciable variation and ensure uniformity, it is essential that any lessening of the pressure be immediately indicated, in order that just sufficient energy may be generated and sent out to keep up an equal flow through the circuit of each transmitting device, that is, that the pressure be kept up uniform, whether more or less translating devices be in circuit. This is attained by providing at the central station means for constantly indicating the pressure and for regulating the production; if appreciable variation be indicated at such station, test lights are arranged so that an approximate visual test of the effect of pressure upon the circuit of any translating devices in use may be shown. From what has been said, it is evident that, as more or less translating devices are brought into circuit, the total resistance of the circuit or all the circuits thereof to the flow of all the current generated varies. To indicate this, electro dynamometers, galvanometers, or electrometers are placed across the main conductor at the central station or by return wire at any point in the circuit, with a zero mark placed to correspond with the deflection consequent upon the maintenance of the proper amount of pressure. It may be advisable (and I have so done) to place at the central station a series of standard Daniel batteries connected by a switch circuit to the galvanometer or dynamo-galvanometer in order that they may be frequently tested for any inaccuracy occurring from any cause whatever. By these means any error is readily detected. To correct variations in the pressure various means may be employed; each supply generator may be connected into the circuit through a switch, and each series may be likewise so connected so that the current of one or more of a series, or one or more entire series may be cut out or thrown into the circuit; or each machine may be arranged so as to be disconnected from the prime motor, or when needed, the prime motor of an entire series may be disconnected.

The plan I prefer, however, is to arrange in connection with the circuit of the battery feeding the field of force magnets of the prime field of force generator before referred to, a series of resistances, so that the energy of the battery current may be varied, this variation causing in turn a variation in current induced in the prime field of force generator and in all the generators directly or indirectly controlled thereby; where a dynamo machine is used, these resistances are to be used in the same manner in connection with the circuit, including the coils around the field magnets. For distributing the current thus generated and regulated at the central station, I prefer to use conductors within insulated pipes or tubing made watertight and buried beneath the earth, provision being made at suitable intervals for house and side connections.

While this plan is preferable for many reasons, it is evident that a conductor may be carried in the air or over house-tops.

While only one pair of conductors may be laid on each street, I prefer especially where streets are wide to lay a pair of conductors along each side of the street near the curb. At proper intervals street lamps may be connected thereto by derived circuits. From the main conductors on principal streets subsidiary main conductors are laid through side streets. From the street conductors, wherever desired, derived circuits are led into houses, one of the conductors passing through a suitable meter, preferably one which measures the amount of electricity passing through. In the house each translating device is placed in a derived circuit, the entire system of means for generation, conduction, and translating being one great multiple arc system.

The translating device in each house may be either for light or power, or both.

For light, the electric lamp consisting of an incandescent material hermetically sealed in glass is preferred.

This lamp should be of a high resistance in comparison with the resistance of any electric lamp which to my knowledge has hitherto been proposed; the endeavour seems to have been to lessen the resistance of the carbon, but I have discovered that a very high resistance, say 100 ohms, must be used in order that a number may be economically and successfully used in a system.

The motor used should be so constructed that each with a constant flow or pressure of current will give the exact power required. This requires that each motor should be wound with finer or coarser wire and with more or less convolutions, which determine the maximum effect of the motor.

In addition, as the motor may be run with variable loads or amounts of work to perform, and as irregularity of speed would be a consequent thereof, it is preferable to provide each motor with a governor which on excessive speed will operate to break the circuit of the motor or to otherwise control it.

A system arranged as thus described provides for all the conditions precedent to an economical and reliable utilization of electricity as a lighting or motive-power agent.

Within

A.D. 1880. No. 857.

Improvements in the utilization of Electricity.

Within certain ascertainable limits, the greater the horse-power of an engine the less the proportional cost per horse-power; so in my system, by consolidating at one station the prime motive force necessary to the generation of a supply for many consumers a great economy is attained.

As ordinarily proposed, each electric light requires its own regulation, which usually is either thermostatic or magnetic, breaking the circuit or bringing in resistances, in any case making a cumbrous lamp requiring delicate management and frequent attention. By regulating at the central station entirely, I am enabled to use a small separate lamp which may be managed with the exercise of no more than ordinary care or attention. The distribution is so provided for that tampering therewith is guarded against, and that connections from the mains to the translating devices are readily made. The means for measuring ensure accuracy and furnish a basis for equitable charges for the amount used by any particular consumer. In the drawings accompanying and forming part of this specification, an arrangement of means is shown for carrying my invention into effect, although it is to be particularly noted that the invention is not dependent upon the specific means and their arrangement described and shown, but that they may be varied without departing from the spirit of my invention.

In these drawings fig. 1 is a plan of a central station; fig. 2 is a modification of fig. 1; fig. 3 is a plan illustrating the street mains and house connections, with translating devices properly introduced; fig. 4 is a plan showing a locality divided into four districts.

In fig. 1 three batteries of generators, C C^1 C^2, are shown, which may be increased or diminished as circumstances may demand.

One generator C of each battery is used to generate the current feeding the field of force magnets of the machines in its battery, the circuit from such field generator through the field of force coils in each battery being shown by the dotted lines 2, 2, 2.

For actuating the rotary parts an engine D is used with each battery, connecting by belt *d* to line of shafting E, from which belts, *e*, pass to each generator.

The coils of each magnet's battery in which currents are generated are connected as in C^1 and C^2 in multiple arc to conductors 3, 3, 3, 3, which in turn are connected in multiple arc to the main conductors 6, 6, from which lead in multiple arc the street conductors or mains, 7, 7, or as is shown in part of battery *c*, each machine may be directly connected in multiple arc to the station conductor 6, 6. F is the prime field of force generator supplying the battery field of force generators C C C, its circuit being shown in dotted lines 1, 1. The field of force magnets of F are magnetized by a current from the galvanic battery G, in whose circuit is arranged the series of resistances H, provided with the cut-out K, by which more or less of the resistances are put in or out of the circuit feeding the field magnets of F. This arrangement forms a very effective and simple method of regulating the production of electric current or the pressure at the central station; for the current generated by F being dependent upon the intensity of the magnetization of its field of force magnets, which in turn depends upon the current transmitted around the magnets by the battery G, as the resistance varies such current it follows that, by varying the resistance in the circuit of G, the current generated by F varies, which in turn varies the current generated in C C C, which in turn varies the current generated in the supply machines of the batteries, proportionate increase of current and rise of pressure in the latter following increase of current around the magnets of F and *vice versâ*. One or more test lamps T L are placed at the central station in derived circuits, to serve as a photometric test of the pressure in the line. For more accurately indicating variations in the pressure, one or more electrometers, galvanometers, or electro-dynamometers, E D, are placed in derived circuits, with scale-marks indicating the deflection caused by the electric pressure, so as to compare the same with the standard pressure to be maintained.

By the proper use of these indicating devices and the regulating devices described, a uniform pressure may be readily and easily maintained through all the mains.

It is preferable to connect all circuits from the generating machines to be the main conductors 6, 6, through switches I I I, so that an entire battery or any portion thereof may be thrown in or out of circuit as the demand upon the station may indicate. It is to be noted also that the belt to the pulley of each machine is to be so arranged by any well-known plans that it may be disconnected from the motor when desired, and in this manner the number of machines in operation may be controlled, and the effective force of each machine while in operation is regulated by the resistance in the circuit G.

The engine may be of any desired pattern or power, the number of machines in any one battery being limited by the power of the engine.

In fig. 2, *c c c c* are the generators for the field of force magnets in batteries not shown, and c^1 is the field of force generator of a battery of which three supply generators c^2 c^2 c^2 are shown connected to station conductors 6, 6, as before explained.

The prime field of force generator F^1 is in this case a dynamo-electric machine instead of a magneto-electric machine, as shown in fig. 1, all its coils being included in one circuit 8, 8, which passes around the field of force magnets of the battery generators *c c c c* c^1. The same principle of regulation is used however, the resistance H and cut-out K therefore being arranged in connection with the circuit through F^1 so as to cause variation in the tension of the current therein as and with the result before explained.

In this figure there is shown what may be used also in connection with the plan shown in fig. 1, viz., means of testing the electro-dynamometer E D, or other indicating instrument used. From a standard Daniels battery D B, a circuit *t c* may be formed through E D by means of the switch I, when moved to the position shown by dotted lines, so that the correctness of E D may be ascertained periodically, and any inaccuracies which might arise be guarded against; usually the switch I remains as shown in full lines, and E D is in a branch between the main conductors 6, 6.

The main conductors 7, 7, fig. 3, are to be connected with the corresponding wires at central stations (see fig. 1), and lead down each side of the street M S. The conductors 7, 7, also branch off into intersecting streets I S. The small circles *o* in this figure indicate electric lamps. For street lighting they are placed as shown in derived circuits from the street mains.

From the mains derived circuits 9, 9, lead into houses in which are placed at suitable spots, the meters M, through which one of the house conductors passes, and by which the amount of electricity supplied to the house is accurately determined. Upon these house circuits are arranged lamps *o* on the multiple arc system, in such number, position, and grouping as may be desired. In

Improvements in the utilization of Electricity.

In these circuits I also propose to introduce electro-motors E M wherever desired, for furnishing light motive power. From the motor a belt, *i*, leads to a line of shafting H and pulleys *a a* for any needed distribution of the power, or the belt *i* may pass directly to a sewing or other machine, a separate motor being used for each power-driven machine. Where motors are desired each preferably should be made of a power proportionate to the maximum work to be done.

While the electrical tension in each machine is regulated at the central station, yet if the maximum load or work be diminished at any particular motor its speed would necessarily be increased; it also might be desired at times to diminish the normal speed of the motor. In order therefore that some determinate speed may be maintained irrespective of load or work, each motor should be furnished with a governor to regulate the electric circuit and the speed.

In fig. 4 is shown a locality divided into four supply districts; each is provided with its own central station marked C S^1, C S^2, C S^3 and C S^4. From each station the mains 7 7 lead out as before described. At convenient points however, say P P, connections between the mains of the stations may be made as shown in dotted lines, the effect then being to merge the entire locality into one large district with four supply stations, the pressure through all being uniform, and each station doing its own quota toward maintaining the uniform pressure. The use of four stations and districts in this diagram is arbitrary and for illustration only, as the number actually employed in any one locality depends upon the area of the district and the number of lights to be maintained.

What I claim as my invention is—

First—A system for the generation and application of electricity, consisting in the combination of means at a central station for generating the electricity, and for indicating and regulating its pressure; means for distributing the electricity, and devices for translating it into light or motive-power, substantially as set forth.

Second—A system for the generation and application of electricity, consisting in a combination of means at a central station for generating the electricity, and for indicating and regulating its pressure, means for distribution, means for translating, and means for measuring the amount used by each consumer, substantially as set forth.

Third—The method of regulating the electro-motive force or pressure in the main conductors, by regulating the strength of the field of force magnets of the main magneto-electric machines so that variation of pressure upon the connection or disconnection of translating devices may be prevented, substantially as set forth.

Fourth—The method of regulating the amount of effect at the translating devices by regulating the field of force current of the generators, substantially as set forth.

Fifth—The method of regulating the generative capacity of one or a battery of magnets, electric or dynamo-electric machines, by regulating the current passing through the field of force magnets, substantially as set forth.

Sixth—The method of regulating the generative capacity of one or a battery of magneto-electric or dynamo-electric machines by varying the resistances of the circuit passing around the field of force magnets, substantially as set forth.

Seventh—The method of operating a battery of magneto-electric machines by using the entire current of one machine of the battery to supply the field of force current of the remainder and throwing the entire current of the latter into a circuit for use, substantially as set forth.

Eighth—The combination with one electrical circuit of a number of separate translating devices, substantially as set forth.

Ninth—The combination with one main electrical circuit of a number of separate translating devices arranged therein upon the multiple arc system, substantially as set forth.

Tenth—The combination with a number of translating devices of one regulator placed at a central station and regulating all the said devices, substantially as set forth.

Eleventh—The combination with one or a battery of generators and a number of translating devices, of means for constantly indicating the electric pressure upon the translating devices, substantially as described.

Twelfth—The combination of a number of generators and a number of translating devices all arranged upon derived circuits or multiple arcs, substantially as described.

Thirteenth—The combination with means for constantly indicating the electric pressure of a battery for testing the indicating means, substantially as described.

In witness whereof I have hereunto set my hand and seal, this twenty-fifth day of March, A.D. 1880.

Witnesses—
CHAS. H. SMITH.
GEO. E. PINCKNEY.

THOMAS ALVA EDISON.

This is the specification, marked A, referred to in the annexed Letters of Registration granted to Thomas Alva Edison, this twenty-sixth day of July, A.D. 1880.

AUGUSTUS LOFTUS.

A.D. 1880. No. 857.

Improvements in the utilization of Electricity.

REPORT.

Sir,

Sydney, 26 June, 1880.

The application of Mr. T. A. Edison, for Letters of Registration for "Improvements in the utilization of Electricity, for light, heat, and power," having been referred to us, we have examined the specification and drawings accompanying the same, and have now the honor to report that we see no objection to the issue of Letters of Registration as prayed for.

We have, &c.,

J. SMITH.
E. C. CRACKNELL.

The Principal Under Secretary.

[Drawings—two sheets.]

[857]

B

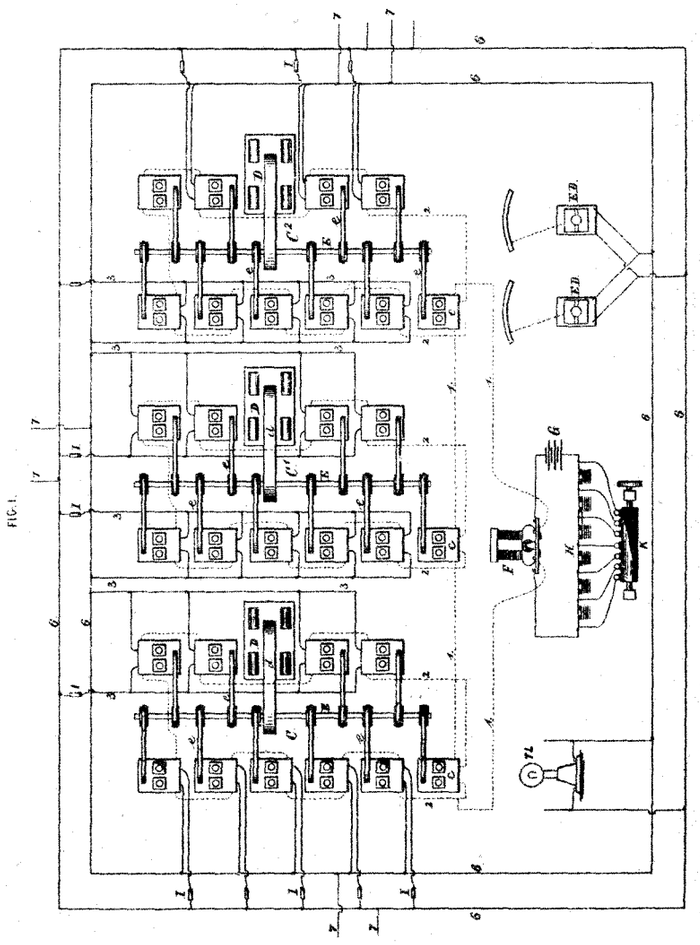

FIG. 1.

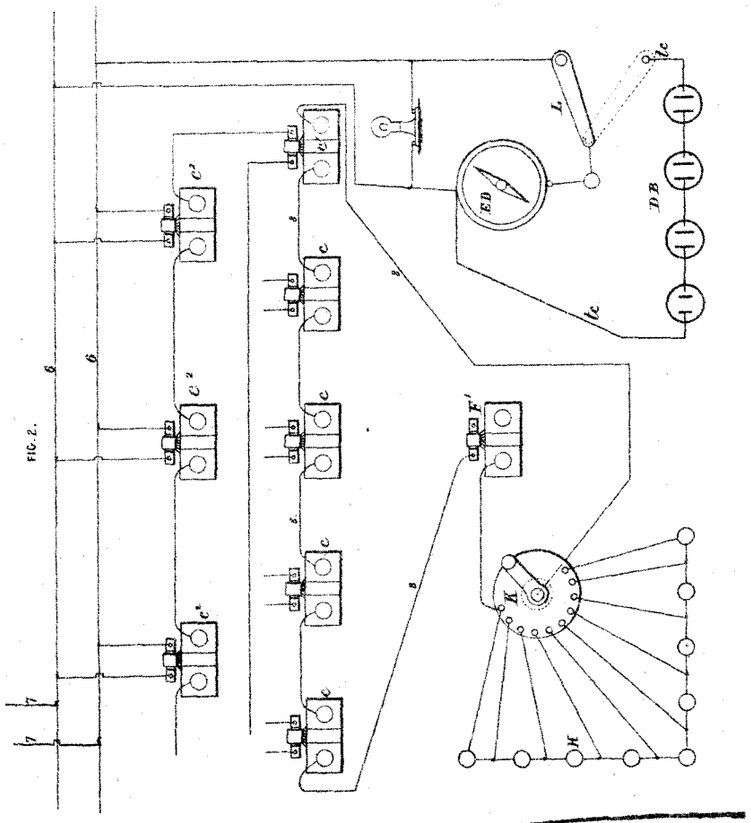

FIG. 2.

Witnesses
Chas. F. Smith
Geo. T. Pinckney

Inventor
Thomas Alva Edison

This is the Sheet of Drawings marked "B" referred to in the annexed Letters of Registration granted to Thomas Alva Edison this twenty-sixth day of July — — A.D. 1880 —

(Sig. 357-) "Augustus Loftus

PHOTO-LITHOGRAPHED AT THE GOVT. PRINTING OFFICE, SYDNEY, NEW SOUTH WALES.

C

857

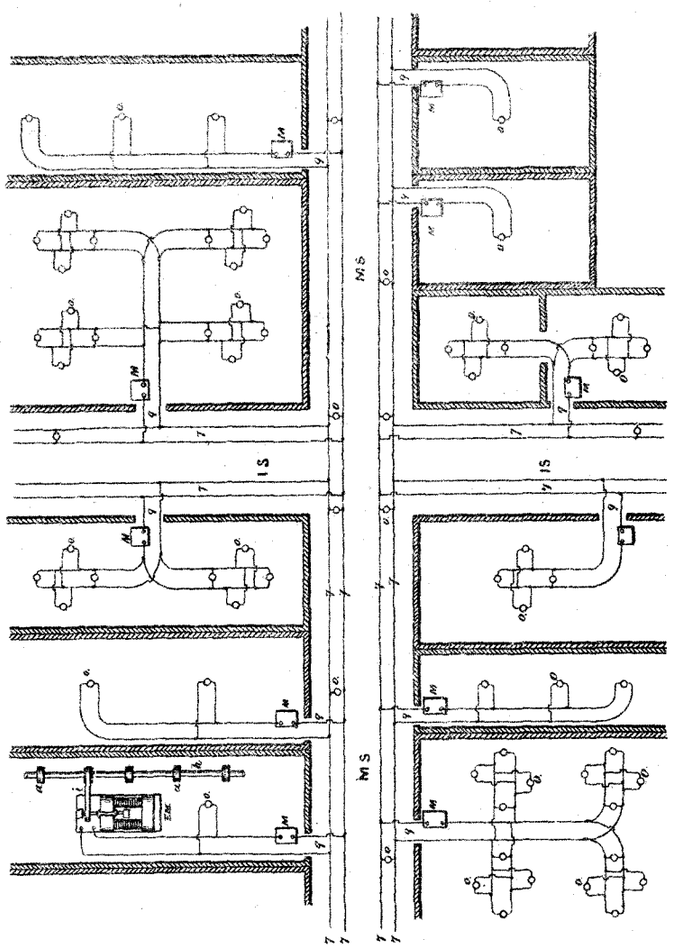

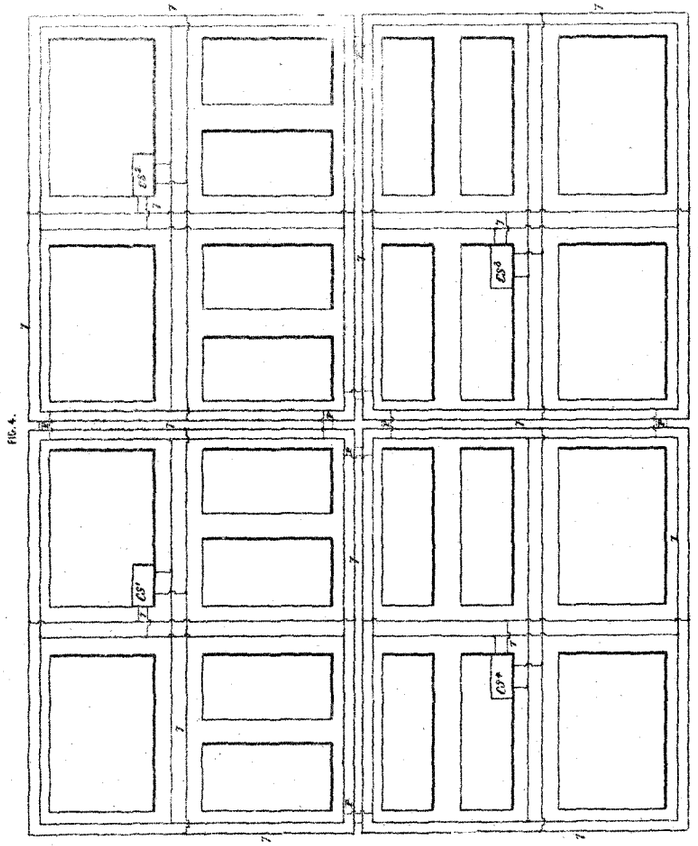

Witnesses
Chas. H. Smith
Geo. T. Pinckney

Inventor
Thomas Alva Edison

This is the Sheet of Drawings marked "C" referred to in the annexed Letters of Registration granted to Thomas Alva Edison this twenty Sixth day of July — AD 1880 —

(Sig. 357 —)

"Augustus Softus."

PHOTO-LITHOGRAPHED AT THE GOVT. PRINTING OFFICE, SYDNEY, NEW SOUTH WALES.

A.D. 1880, 26*th July*. No. 858.

IMPROVEMENT IN ELECTRIC LAMPS, &c.

LETTERS OF REGISTRATION to Thomas Alva Edison, for an Improvement in Electric Lamps, and in the method of manufacturing the same.

[Registered on the 27th day of July, 1880, in pursuance of the Act 16 Vic. No. 24.]

BY His Excellency the Right Honorable Sir Augustus William Frederick Spencer Loftus (commonly called Lord Augustus Loftus), Knight Grand Cross of the Most Honorable Order of the Bath, a Member of Her Majesty's Most Honorable Privy Council, Governor and Commander-in Chief of the Colony of New South Wales and its Dependencies.

TO ALL TO WHOM THESE PRESENTS SHALL COME, greeting :

WHEREAS Thomas Alva Edison, of Menlo Park, in the State of New Jersey, United States of America, electrician, hath by his Petition humbly represented to me that he is the author or designer of a certain invention or improvement in manufactures, that is to say, of an invention entitled, "An Improvement in Electric Lamps, and in the method of manufacturing the same," which is more particularly described in the specification and the sheet of drawings which are hereunto annexed ; and that he, the said Petitioner, hath deposited with the Honorable the Treasurer of the said Colony of New South Wales the sum of Twenty Pounds sterling, for defraying the expense of granting these Letters of Registration, as required by the Act of Council, sixteenth Victoria, number twenty-four ; and hath humbly prayed that I would be pleased to grant Letters of Registration, whereby the exclusive enjoyment and advantage of the said invention or improvement might be secured to him for a period of fourteen years : And I, being willing to give encouragement to all inventions and improvements in the arts or manufactures which may be for the public good, and having received a report favourable to the prayer of the said Petition, from competent persons appointed by me to examine and consider the matters stated therein and to report thereon for my information, am pleased, with the advice of the Executive Council, and in exercise of the power and authority given to me by the said Act of Council, to grant, and do by these Letters of Registration grant unto the said Thomas Alva Edison, his executors, administrators, and assigns, the exclusive enjoyment and advantage of the said invention or improvement, for and during the term of fourteen years from the date hereof ; to have, hold, and exercise unto the said Thomas Alva Edison, his executors, administrators, and assigns, the exclusive enjoyment and advantage thereof, for and during and unto the full end and term of fourteen years from the date of these presents next and immediately ensuing, and fully to be complete and ended : Provided always, that if the said Thomas Alva Edison shall not, within three days after the granting of these Letters of Registration, register the same in the proper office in the Supreme Court, at Sydney, in the said Colony of New South Wales, then these Letters of Registration, and all advantages whatsoever hereby granted, shall cease and become void.

In witness whereof, I have hereunto set my sign manual, and have caused the present Letters of Registration to be sealed with the seal of the said Colony of New South Wales, at Government House, Sydney, in New South Wales, this twenty-sixth day of July, in the year of our Lord one thousand eight hundred and eighty.

[L.S.] AUGUSTUS LOFTUS.

Improvement in Electric Lamps, &c.

SPECIFICATION.

TO ALL WHOM IT MAY CONCERN: Be it known that I, THOMAS ALVA EDISON, of Menlo Park, in the State of New Jersey, United States of America, electrician, have invented an Improvement in Electric Lamps, and in the method of manufacturing the same.

For an electric lamp I prefer to use an incandescent conductor of high resistance, hermetically sealed in a glass chamber.

Great difficulty has always been experienced in so sealing a glass vacuum globe or chamber that complete union of the parts was had and danger of opening or separation avoided.

In all vacuum sealing of which I am cognizant there has never been a complete union of the parts where the parts were attempted to be joined *in vacuo*. There might be a union forming a tight joint lasting an indefinite time under ordinary conditions, yet critical examination always revealed a line showing incomplete juncture; when under the influence of heat or conditions present in an electric lamp an opening would occur.

One part of my invention therefore relates to a method of manufacturing electric lamps so that a stable vacuum may be maintained therein. In manufacturing my lamps a glass bulb is formed with a long small tube extending therefrom, by which the bulb is to be attached to the air-pump, and it is preferably curved so that several may be attached to one pump.

Upon the opposite side from the tube is formed a supporting neck of a size sufficient to permit the introduction through it, into the body of the bulb, of the carbon arc. A piece of tubing is formed into a round head at one end for receiving the supporting and conducting wires of the arc. The tube a little below this head is made as large as the neck. A part of the head where the platina wires pass may be formed of white enamel glass, having a greater conductivity for heat than the main part of the vessel, or it may be of plain glass. The glass through which the platina wires pass is melted and sealed around them by fusion, the glass extending some little distance above the general surface of the head around the wires. The platinum wires are joined to copper or aluminum wires, which pass out through the lower or open end of the tube.

Clamps for holding the incandescent conductor are secured to the upper ends of the platinum wires, and the incandescent conductor secured therein. The head is then passed into the neck until the lower edge of the neck and the enlargement of the tube below the head meet, and the two are then joined together by fusion. The lamp is now ready for exhaustion, and for this purpose it is attached by the tube aforesaid to an air-pump. After the proper degree of vacuum has been reached, the tube is closed by fusion at the point of juncture with the pump and the lamp removed from the pump.

The tube is then sealed by fusion at or near the plane of the bulb; there is now the same degree of vacuum upon each side of the last seal. The vacuum in the tube is now destroyed, and the tube again sealed just above the seal at or near the plane of the bulb. The vacuum in the bulb is now protected by two sealings, one *in vacuo* and one in air. I find that this double sealing makes a complete and perfect union of the parts, so that a stable vacuum may be maintained. In manufacturing these lamps, I use within the vacuum chamber only such material as when subjected to influences within the chamber consequent upon the light do not injuriously affect the light.

For instance, iron or steel under the influence of heat in a vacuum vaporize to a slight extent and form carburet of iron, while platinum in its ordinary state always contains some air. I therefore use platinum or metals of that group prepared and treated by heat *in vacuo* as heretofore announced by me, or else aluminum for the supporting clamps and for all metallic parts within the vacuum chamber. If a definite area of radiating surface be raised to a definite temperature, a definite amount of light is the result, a definite electro-motive force of electricity, or as I have termed it "pressure" of current being required therefor; the conductors or mains being proportioned to all these conditions. I have discovered that if the resistance of the light-giving body be increased, its radiating surface being the same, the same amount of light will be produced, but the conductors may be diminished in size proportionally to the increase in resistance, much less proportionate increase of pressure of current, however, being required.

For example, if all the lamps in circuit have incandescent conductors of one hundred ohms resistance each, then one thousand pounds of copper conductor should be used in the main conductors, and one hundred volts will be required to maintain the lights. If now the radiating surface of each lamp be enlarged, but the resistance of each be raised to two hundred ohms, five hundred pounds of copper conductor will answer for main conductors; one hundred and forty volts, however, being required to keep the lights up to the same point, so that by doubling the resistance the prime cost of one-half the conductors is saved, the amount of energy expended remaining the same, about three thousand foot pounds being required to maintain the light in either case, which is entirely independent of the resistance.

Another part of my invention therefore relates to utilizing this discovery by so adjusting the radiating surfaces, resistances, and pressure, relatively to each other, that great economy in conductors may be obtained.

In one form I increase the resistance by taking a filament of carbon long enough to give twice the ordinary resistance and double it upon itself; keeping the two surfaces electrically apart. In this case the contiguous sides radiate but little light, as each obscures the other, but I obtain the increased resistance necessary to enable me to use the smaller conductors.

A number of arcs may be connected together as a series in a lamp, in which event there is an increase of resistance (equal to the number used), and the radiating surfaces are secured with a proportionate decrease in the amount of conductor necessary.

As a necessary part of any practical system of electric lighting for domestic uses, it is essential that the electric lamp should be simple in construction and complete in itself, requiring no skill in placing it in position or in manipulating it. To provide for this, an insulating ring is secured upon the lower end of the neck of the lamp, and upon the opposite sides of this ring are placed two contact springs, one of the conductors leading from the incandescent conductor, being secured to each.

A cup-shaped holder is made of insulating material, ornamented as desired, the bottom being fashioned so as to be secured in any suitable support, such as a bracket or chandelier. On the interior of the cup, which

which is of a size to receive the neck of the lamp, are two metallic plates opposite to but insulated from each other. To one is fastened a conductor leading directly or indirectly from the source of electricity, and upon the exterior of the holder is a metallic nut to which the other main conductor leads. A screw passes through this nut, and may be made to impinge against the other metallic piece so as to electrically connect the nut and plate.

The main conductors may pass to the holder through ordinary gas or other tubing, and through the bracket or chandelier arms or in any other suitable way.

From this description it is evident that a lamp-holder may be so made that the lamp may be placed in position in or removed from the holder without any skill of manipulation of binding posts or fastening devices, and that the current for lighting is turned off or on by simply turning the screw that presses upon one of the plates. It is evident that the portion of the neck of the lamp entering the socket may be round or square or many-sided, and provided with a feather, lugs, or spliner, the holder being correspondingly hollowed out.

It is also evident that the neck and holder may be made of such relative size that the neck shall slide upon and over, instead of within the holder. In a prior application for letters patent, I have stated how fibrous material capable of carbonization may be coiled in a spiral, in order that a large resistance may be had with comparatively small radiating surface; I have also shown how an incandescent conductor of small radiating surface with large resistance may be made of paper properly carbonized.

I have since discovered that an incandescent conductor of very high resistance in comparison to the radiating surface may be made of such natural fibres as are capable of carbonization. I prefer to use the single fibre of bleached Manilla hemp, although any of the fibres which are large, round, and filamentary, instead of cellular, may be used as hereafter set forth. In using these fibres, I wind the ends with tissue paper and then carbonize them, the tissue paper wrapping forming an enlarged end, which gives a good bearing for the supporting clamps.

Figures 1, 2, 3, 4 and 5 illustrate the method of manufacture of my improved lamp, showing the steps therein successively.

A piece of tubing the size of *c* is taken, on which is blown or otherwise formed the bulb *b*, whose upper portion is drawn out into the tube *h* curved, so that the several bulbs may be attached to one air-exhausting pump. The part *c* is left unchanged in order to form a supporting neck for the lamp. In forming this from tubing, however, the lower end is often drawn out as shown in figure 1. This small end is removed on the line *x x*, leaving the globe, neck, and tube as shown in figure 2.

f is a piece of glass tubing of a size somewhat less that *c*. Upon its upper end is formed the bulb *d* and the two seals *p p* for the wires. Below *d* the enlargement *e* is formed in the tube *f*, its exterior diameter being the same, or nearly so, as that of *c*. Platinum wires *w w* joined to conductors 1 2 are passed through openings on the projections *p p*, which projections are then fused by heat around the wires *w w* so as to seal the wires hermetically in the glass, said seals extending around the wire above the general surface of the bulb *d*.

Clamps *h' h'* are attached to the wires and the incandescent conductor fastened in the clamps. It is to be here remarked that the clamps or wires within the globe must be of some material not so affected by any influences existing within the globe when the proper vacuum has been attained as to interfere with the light or its proper dissemination. If iron be used it is so acted on that it is gradually destroyed, with an ensuing deposit on the glass, obscuring the transparency of the globe, and also acting on the carbon uniting with it, and finally destroying it. In order to prevent this, and to guard against any injurious influences whatever, the clamps *h' h'* and wires within the globe should be of platinum or some metal or metals of the platinum group, treated by the vacuum and heating process described by me in a prior application for letters patent. The arc *a* and bulb *d* are inserted in the neck *c*, until the end *x x* of neck *c* rests against the enlargement *e*, when the two are securely and hermetically joined by fusion of the glass at that point.

The lamp is attached by the tube *h* to an exhaust pump of any suitable character, and after the proper degree of exhaustion has been reached, the tube *h* is sealed by fusion of the glass at *i* and removed from the pump, and a second seal, *l*, is made in the tube *h* immediately above the globe *b*. This last sealing is made entirely *in vacuo*, and the degree of vacuum in *b* and in *h*, between *l* and *i*, is the same.

I have found, however, that a perfect and durable seal cannot be made when all the portions of the glass which unite to form the seal are in a vacuum when the seal is made.

Hence the seal *i* at the end of *h*. Above *l* the tube *h* should also be sealed by fusion at *m*, or it may be broken off at *m*, and a drop of molten glass placed therein and the parts melted to form the seal. The seal *l'*, figure 5, is therefore the result of two sealings at *l in vacuo*, and at *m* in air. I have found that such a seal is lasting under all conditions, and that by the method herein indicated a globe is so constructed and sealed that a vacuum perfectly stable is maintained therein.

The wires 1 and 2 for attachment to devices for completing the circuit pass out of the end of the tube *f*, and in order to prevent their accidental crossing or displacement a plug *n* of cork, plaster of Paris, or other insulating material is put in the end of *f*, securing the wires therein.

Figures 6, 7, 8, 9, 10, and 11 show modifications in which the resistance of the incandescent arc is increased.

In figure 6, *b* is the enclosing globe. Several incandescent conductors *a*, each of the standard resistance, are united at their ends in a series by conducting clamps *k*, the terminal ends of the series connecting to clamps *h' h'* to which are attached the wires *w w*. The series are supported upon *d* in circular form by wires or other supports, 3, 3. In this case the current entering by 1 traverses one carbon and passes by clamp *k* to the next and so on through the series to conductor 2. Five of these carbons are shown in figures 6 and 7. As each incandescent portion *a* is of standard resistance and gives a standard light, the object of this arrangement is to group a number of such lights and to light a much larger area than one light would; at the same time, the total resistance of the lamp being proportionally increased, the size of the conductors or street mains is proportionately lessened. There being, consequently, great economy in the laying thereof, and the number of street lamps required being lessened, it is

practicable

practicable to light thinly-settled highways and streets. In figures 9, 10, and 11 a strip of carbonized material is employed of standard resistance for a given length, but of twice the ordinary length, and the same is doubled upon itself. At the point of bending back, an insulating block *o* is introduced, so that the folded carbonized strip is kept apart. To the free ends are attached the clamps *h' h'* and conductors *w w*. Each inner contiguous surface is partially hidden by the other, so that the outer surface is the portion that radiates light, and this is to be equal to the total surface of an ordinary or undoubled carbon, but the increase of length has doubled the resistance, hence there is a double resistance with little change in the radiating surface. This double resistance, however, enables a smaller conductor to be used, the amount of metal in this instance being diminished one-half.

This ability to diminish the amount of metal in conductors is of great importance, and in many instances, notably in thinly settled localities, it may determine the practicability of a system of electric lighting. It also enables localities far distant from a central station or source of electric energy to be supplied with electric energy for purposes of light and power, when under ordinary conditions, or under conditions which have usually existed, the first cost of conductors and the cost of maintenance would prove insurmountable obstacles.

An incandescent conductor of very high resistance in proportion to its radiating surface may be made of any natural fibre capable of carbonization, especially such as are large and filamentary instead of cellular. A preferable one for this purpose is a single fibre of bleached Manilla hemp. A fibre is taken, its ends wound with tissue paper and then carbonized, the carbonization uniting the fibre and paper wrapping, the latter forming an enlarged end which gives a good bearing for the supporting clamps.

Figures 12 and 13 show my lamp manufactured as hereinbefore described, with additions and modifications, rendering it a separate and complete article adapted for attachment to a suitable support. Upon the lower end of the part *c* is secured a cylinder *q* of any suitable insulating material, provided on opposite sides with metallic springs or contact pieces 13 14. From the clamps *h' h'*, which hold and support the incandescent arc *a*, the conductors 1 2 lead to the contact pieces 13, 14, adapted to complete the electrical circuit when the lamp is placed in position in the holder hereafter to be described. This construction forms a separate electric lamp, which may readily be removed from or placed within a suitable holder; the act of placing the lamps in position completing without adjustment or attention the necessary connection of the circuit to the light-giving portion.

r is a socket or holder for receiving the lamp. It is made of suitable insulating material, shaped and ornamented as may be desired, receiving and supporting the neck of the electric lamp, and fashioned at one end so as to be fastened on to a gas fixture or other suitable support as shown. The cylindrical cup or socket for the lamp is at the top, and a screw threaded aperture in the base allows the holder to be attached to a standard bracket or a chandelier arm *t*.

Upon the interior are the metallic plates *u v* insulated from each other. Upon the exterior of the holder is a metallic nut *s* in which works the metallic screw *y*.

A conductor 5 leads to the plate *u*, and a conductor 6 to the nut *s*. Upon turning the screw *y* electric connection between the plate *v* and nut *s* is either completed or broken, dependent upon the direction of the turning.

The conductors 5, 6 lead directly or indirectly from the source of electricity, and may be placed inside of gas or other suitable pipe or tubing, as shown in figure 12, or they may be brought to the lamp in any convenient manner.

From the foregoing it may be readily seen that if the lamp be placed in the socket, as shown in figure 12 one spring 13 bears against and forms electrical contact with one plate, say *u*, while the other spring 14 bears against and forms electrical contact with the other plate *v*. If the screw *y* be turned so as to impinge firmly on plate *v*, a complete circuit is formed *via* wire 5, plate *u*, spring 13, wire 2, incandescent conductor *a*, wire 1, spring 14, plate *v*, screw *y*, nut *s*, and wire 6; the maximum light, a dim light, or no light being due respectively to a fine contact, a slight contact, or no contact between *v* and *y*.

From the description it is evident that the lamp is an article complete in itself, capable of being placed in position for use without any attention or adjustment.

While I have shown contact springs upon the cylinder *q*, or the neck of the lamp, and contact plates upon the interior of the socket or holder, it is evident that this relation could be reversed, the plates being placed on the neck of the lamp and the springs in the socket without departing from the spirit of my invention or requiring any further invention. It is also evident that the lamp can be so constructed that the neck will embrace the holder instead of being placed therein.

What I claim as my invention is—

First—The method of forming electric lamps substantially as set forth, consisting in separately forming the enclosing globe and the supporting bulb for the incandescent conductor, attaching the wires and incandescent conductor thereto, and then hermetically uniting the parts prior to the formation of the vacuum, substantially as herein set forth.

Second—The method of hermetically sealing a vitrified vacuum chamber which consists of first sealing *in vacuo* and then sealing in the air, substantially as described.

Third—The clamps and wires made of platinum or metals of the platinum group, or conductors of electricity not affected by influences within the lamp, substantially as described.

Fourth—In a system of generation, distribution, and translation of electricity for purposes of light, the method of diminishing the amount of metal required in a given length of main conductors by increasing the resistance of the lamps, substantially as described.

Fifth—An incandescent conductor formed of several separate conductors joined together, substantially as set forth.

Sixth—An incandescent conductor formed of a long strip doubled upon itself so as to increase the resistance and maintain a given radiating surface, substantially as set forth.

Seventh—

Seventh—An incandescent conductor formed of a single carbonized fibre, substantially as described.

Eighth—An incandescent conductor, having a body formed of a single fibre with enlarged ends made of paper wrapped upon the ends of the fibre and carbonized, substantially as set forth.

Ninth—A separate electric lamp adapted to be readily removed from or placed or replaced upon or within a suitable holder, substantially as herein described.

Tenth—The combination of a separate removable electric lamp and a suitable holder, substantially as herein described.

Eleventh—The combination of a separate removable lamp, a suitable holder, and electric conductors, which complete the circuit when desired to said lamp, but are not attached thereto, substantially as herein described.

Twelfth—An electric lamp consisting of a globe, substantially of one piece of glass, hermetically sealed and enclosed in a vacuum material capable of being rendered incandescent by an electric current and provided at its base with contact pieces, substantially as herein described.

Thirteenth—The combination in an electric lamp of a glass globe, enclosing in a vacuum material capable of being rendered incandescent by an electric current, an insulated base, spring contact, and conductors therefrom to the incandescent material, substantially as herein described.

Fourteenth—A socket or holder for electric lamps, consisting of an insulating cylinder formed to receive and support the lamp, and provided with two contact plates and a circuit controlling device for controlling the circuit to one of the contact plates, substantially as herein set forth.

Fifteenth—The combination with a bracket or chandelier arm of a socket or holder adapted to receive and support an electric lamp, substantially as herein set forth.

Sixteenth—The combination of a holder, bracket, or chandelier arm with a socket or holder adapted to be received thereon, and to receive and support an electric lamp, and conductors passing through the arm to contact plates in the holder, substantially as herein set forth.

Seventeenth—The combination with a socket or holder provided with suitable contact plates, of a lamp provided with corresponding contact springs upon its exterior, substantially as herein set forth.

In witness whereof I have hereunto set my hand and seal, this twenty-fifth day of March, A.D. 1880.

THOMAS ALVA EDISON.

Witnesses—
CHAS. H. SMITH.
GEO. T. PINCKNEY.

This is the specification referred to in the annexed Letters of Registration granted to Thomas Alva Edison, this twenty-sixth day of July, A.D. 1880.

AUGUSTUS LOFTUS.

REPORT.

Sir, Sydney, 26 June, 1880.

The application of Mr. T. A. Edison for Letters of Registration for "Improvements in Electric Lamps, and in the method of manufacturing the same," having been referred to us, we have examined the specification and drawings accompanying the same, and have now the honor to report that we see no objection to the issue of Letters of Registration as prayed for.

We have, &c.,
J. SMITH.
E. C. CRACKNELL

The Principal Under Secretary.

[Drawings—one sheet.]

(Sig. 357-)

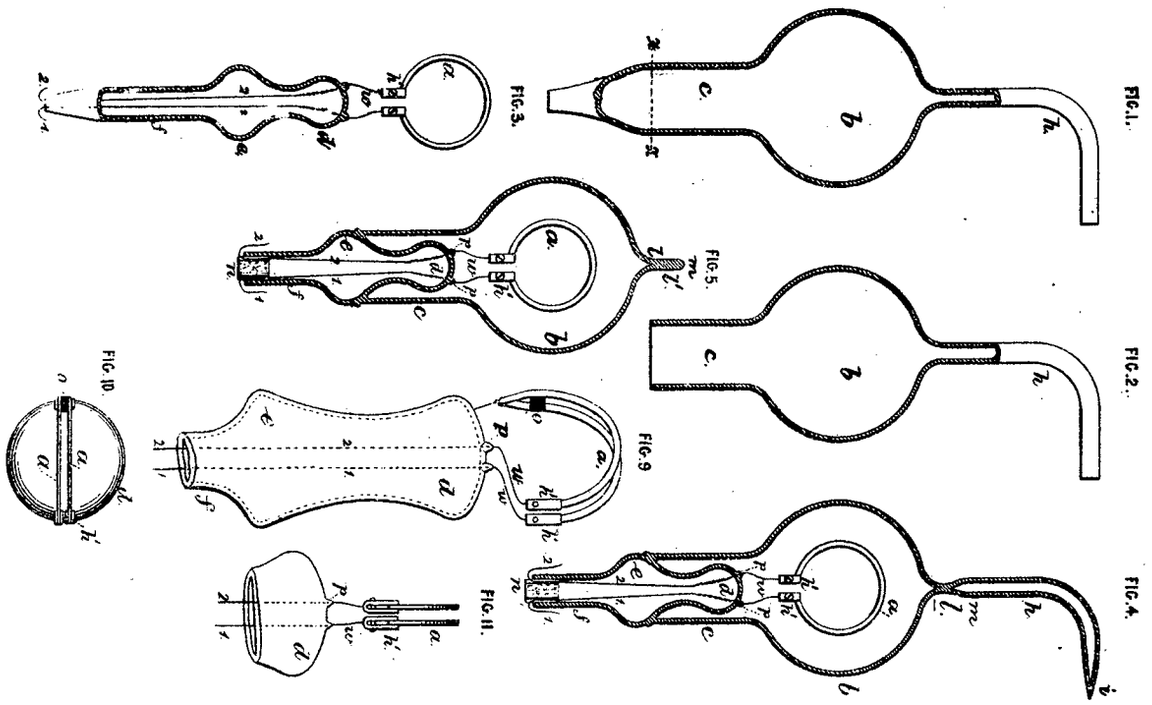

Witnesses
Chas. N. Smith
G. S. T. Pinckney

This is the Sheet of Drawings referred to in the annexed Letters of Registration granted to Thomas Alva Edison this twenty sixth day of July A.D. 1880.

"Augustus Loftus".

PHOTO-LITHOGRAPHED AT THE GOVT. PRINTING OFFICE, SYDNEY, NEW SOUTH WALES.

FIG. 6.

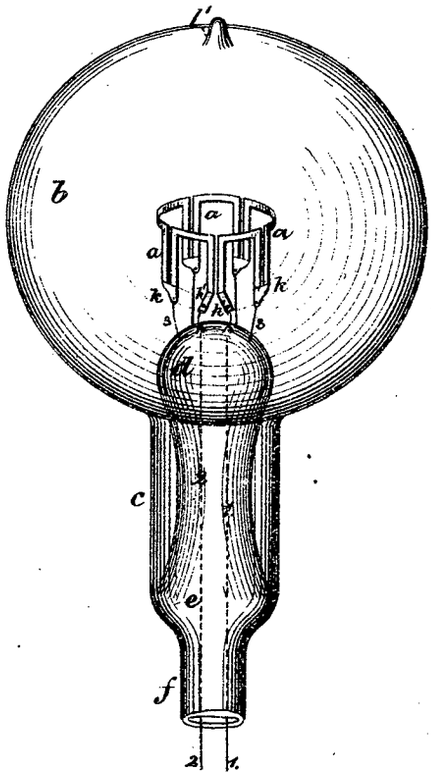

FIG. 12.

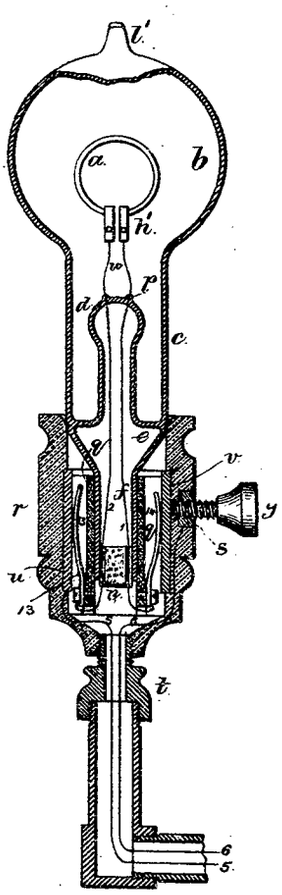

FIG. 7.

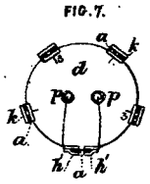

FIG. 8.

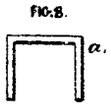

FIG. 13.

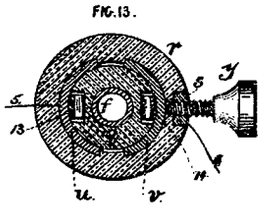

Inventor

Thomas Alva Edison

A.D. 1880, 26*th July*. No. 859.

IMPROVEMENTS IN PRESERVING MEAT, &c.

LETTERS OF REGISTRATION to Christian Heinrich Friedrich Schneemann, John Christian Hermann Baass, and Carl Heinrich Florens Müller, for Improvements in the means of and in apparatus for preserving Meat and other articles of consumption.

[Registered on the 27th day of July, 1880, in pursuance of the Act 16 Vic. No. 24.]

BY His Excellency the Right Honorable Sir Augustus William Frederick Spencer Loftus (commonly called Lord Augustus Loftus), Knight Grand Cross of the Most Honorable Order of the Bath, a Member of Her Majesty's Most Honorable Privy Council, Governor and Commander-in-Chief of the Colony of New South Wales and its Dependencies.

TO ALL TO WHOM THESE PRESENTS SHALL COME, greeting:

WHEREAS Christian Heinrich Friedrich Schneemann, John Christian Hermann Baass, and Carl Heinrich Florens Müller, all of Hamburg, in the German Empire, gentlemen, by their agent, Stephen Campbell Brown, have by their Petition humbly represented to me that they are the authors or designers of a certain invention or improvement in manufactures, that is to say, of an invention of "Improvements in the means of and in apparatus for preserving Meat and other articles of consumption," which is more particularly described in the amended specification and the drawing which are hereunto annexed; and that they, the said Petitioners, have deposited with the Honorable the Treasurer of the said Colony of New South Wales the sum of Twenty Pounds sterling, for defraying the expense of granting these Letters of Registration, as required by the Act of Council, sixteenth Victoria, number twenty-four; and have humbly prayed that I would be pleased to grant Letters of Registration, whereby the exclusive enjoyment and advantage of the said invention or improvement might be secured to them for a period of fourteen years: And I, being willing to give encouragement to all inventions and improvements in the arts or manufactures which may be for the public good, and having received a report favourable to the prayer of the said Petition, from competent persons appointed by me to examine and consider the matters stated therein and to report thereon for my information, am pleased, with the advice of the Executive Council, and in exercise of the power and authority given to me by the said Act of Council, to grant, and do by these Letters of Registration grant unto the said Christian Heinrich Friedrich Schneemann, John Christian Hermann Baass, and Carl Heinrich Florens Müller, their executors, administrators, and assigns, the exclusive enjoyment and advantage of the said invention or improvement, for and during the term of fourteen years from the date hereof; to have, hold, and exercise unto the said Christian Heinrich Friedrich Schneemann, John Christian Hermann Baass, and Carl Heinrich Florens Müller, their executors, administrators, and assigns, the exclusive enjoyment and advantage thereof, for and during and unto the full end and term of fourteen years from the date of these presents next and immediately ensuing, and fully to be complete and ended: Provided always, that if the said Christian Heinrich Friedrich Schneemann, John Christian Hermann Baass, and Carl Heinrich Florens Müller shall not, within three days after the granting of these Letters of Registration, register the same in the proper office in the Supreme Court, at Sydney, in the said Colony of New South Wales, then these Letters of Registration, and all advantages whatsoever hereby granted, shall cease and become void.

In witness whereof, I have hereunto set my sign manual, and have caused the present Letters of Registration to be sealed with the seal of the said Colony of New South Wales, at Government House, Sydney, in New South Wales, this twenty-sixth day of July, in the year of our Lord one thousand eight hundred and eighty.

[L.S.] AUGUSTUS LOFTUS.

Improvements in preserving Meat, &c.

SPECIFICATION.

TO ALL TO WHOM THESE PRESENTS SHALL COME: I, STEPHEN CAMPBELL BROWN, of Sydney, in the Colony of New South Wales, gentleman, send greeting:

WHEREAS I am desirous of obtaining Letters of Registration, under the sign manual of His Excellency the Governor of the said Colony of New South Wales and the seal of the said Colony, for the exclusive enjoyment and advantage, for a period of fourteen years, of an invention for "Improvements in the means of and in apparatus for preserving meat and other articles of consumption," invented by Christian Heinrich, Friedrich Schneemann, John Christian Hermann Baass, and Carl Heinrich Florens Müller, all of Hamburg, in the German Empire, gentlemen, of whom I am the solicitor and agent:

NOW KNOW YE, that the nature of the said invention, and the manner in which the same is to be worked, are particularly described and disclosed in and by the following statement, that is to say:—

Improvements in the means of and in apparatus for preserving meat and other articles of consumption:—

1. The articles to be preserved are placed in an air-tight vessel of cylindrical shape, which vessel is in communication with an air-pump, worked by direct action of steam or water put under pressure.
2. Meat or other articles containing a great deal of moisture must in the first instance have this moisture extracted to a certain degree, and for this purpose atmospheric air is drawn through the vessel by the action of the before-mentioned air-pump. The air, before entering the said vessel, is forced through pipes or tubes containing sufficient quantity of pumice-stone, which latter consumes the moisture in the air, and allows only dry air to enter into the preserving vessel.
3. After the meat or other articles have been dried sufficiently, the inlet of the outer air is closed, and a requisite vacuum in the vessel (being within two inches of a perfect vacuum) is then produced by means of the above-mentioned air-pump. The communication between pump and vessel is then closed, after which the vessel is brought in connection with a gasometer or reservoir, containing sulphuric gas of purest state, of which gas a small quantity is allowed to enter the vessel. The pressure of air is then again reduced as fully as possible by a new action of the said air-pump, after which the manipulation of preservation is completed.
4. Meat and similar articles can be kept in the vessel "under vacuum" for nearly any length of time in fully preserved state, or it may be removed from the vessel and be freely exposed to the atmosphere, the influence of which will not be able to damage it for several months.
5. The sulphuric gas is produced in a reservoir, as described in the drawing, and must be of a chemically pure nature, and be introduced in a perfectly dry state without a particle of water.
6. The cylinders or vessels used for preserving are lined with glass, or made of metal of an air-resisting nature.

Explanation of terms used in drawing in connection with "Improvements in the means of and in apparatus for preserving meat and other articles of consumption":—

A, cylinder or vessel for reception of meat or other articles intended to be preserved; B, tubes or pipes filled with pumice-stone for extracting moisture; C C^1 C^2, steam or water air-pump connected with cylinder A, through pipes and taps marked a a^1 a^2, and receiving the steam or water pressure through the double pipe F; E is the gasometer filled with sulphuric gas, and connected with cylinder A through taps d and e; G is a manometer to indicate the degree of vacuum produced by the air-pump.

The dry air, by means of the air-pump, is sent through from tubes B into the cylinder A, and after the article is sufficiently dried, the tap m is closed, and the requisite vacuum produced by means of the air pump; whereupon taps a a^1 a^2 are closed, and then a small percentage of sulphuric gas from D allowed to enter into cylinder A.

In witness whereof, I have hereunto set my hand and seal, this ninth day of June, in the year of our Lord one thousand eight hundred and eighty.

S. C. BROWN.

Signed, sealed, and delivered by the said Stephen Campbell Brown, in the presence of,—
ELIOTT MEYER, solicitor, Sydney.

MEMORANDUM.—The within-named Christian Heinrich Friedrich Schneemann, John Christian Hermann Baass, and Carl Heinrich Florens Müller only claim protection for the apparatus and general mode of procedure of the said invention.

S. C. BROWN.

This is the amended specification referred to in the annexed Letters of Registration granted to Christian Heinrich Friedrich Schneemann, John Christian Hermann Baass, and Carl Heinrich Florens Müller, this twenty-sixth day of July, A.D. 1880.

AUGUSTUS LOFTUS.

Improvements in preserving Meat, &c.

REPORTS.

Sir, Sydney, 17 June, 1880.

The application of Mr. S. C. Brown, as agent for Messrs. Schneemann, Baass, and Müller, for Letters of Registration for "Improvements in the means of and in apparatus for preserving Meat and other articles of consumption," having been referred to us, we have examined the specification and drawings accompanying the same, and have now the honor to report thereon as follows:—

The apparatus used and the general mode of procedure appear to us to have sufficient novelty to warrant the granting of Letters of Registration; but there is an ambiguity in the specification, inasmuch as the term "sulphuric" gas is not used by English chemists. We presume that "sulphurous acid gas" is meant, but if so it cannot be specially claimed, as it has been used in other patented processes for preserving meat. We recommend that the specification be returned, in order that the above-named ambiguity may be removed, and that a distinct claim be added to the specification, showing that it is only the apparatus and general mode of procedure that is to be protected.

We have, &c.,

The Principal Under Secretary.

J. SMITH.
CHAS. WATT.

MEMO.—We consider the memo. now attached to the specification to be sufficient for the purpose, and that Letters of Registration may now be granted.

26 June, 1880.

J. SMITH.
CHAS. WATT.

[Drawing—one sheet.]

No. 860.

[Assignment of No. 242A. See page 73 of Return of 21 June, 1872.]

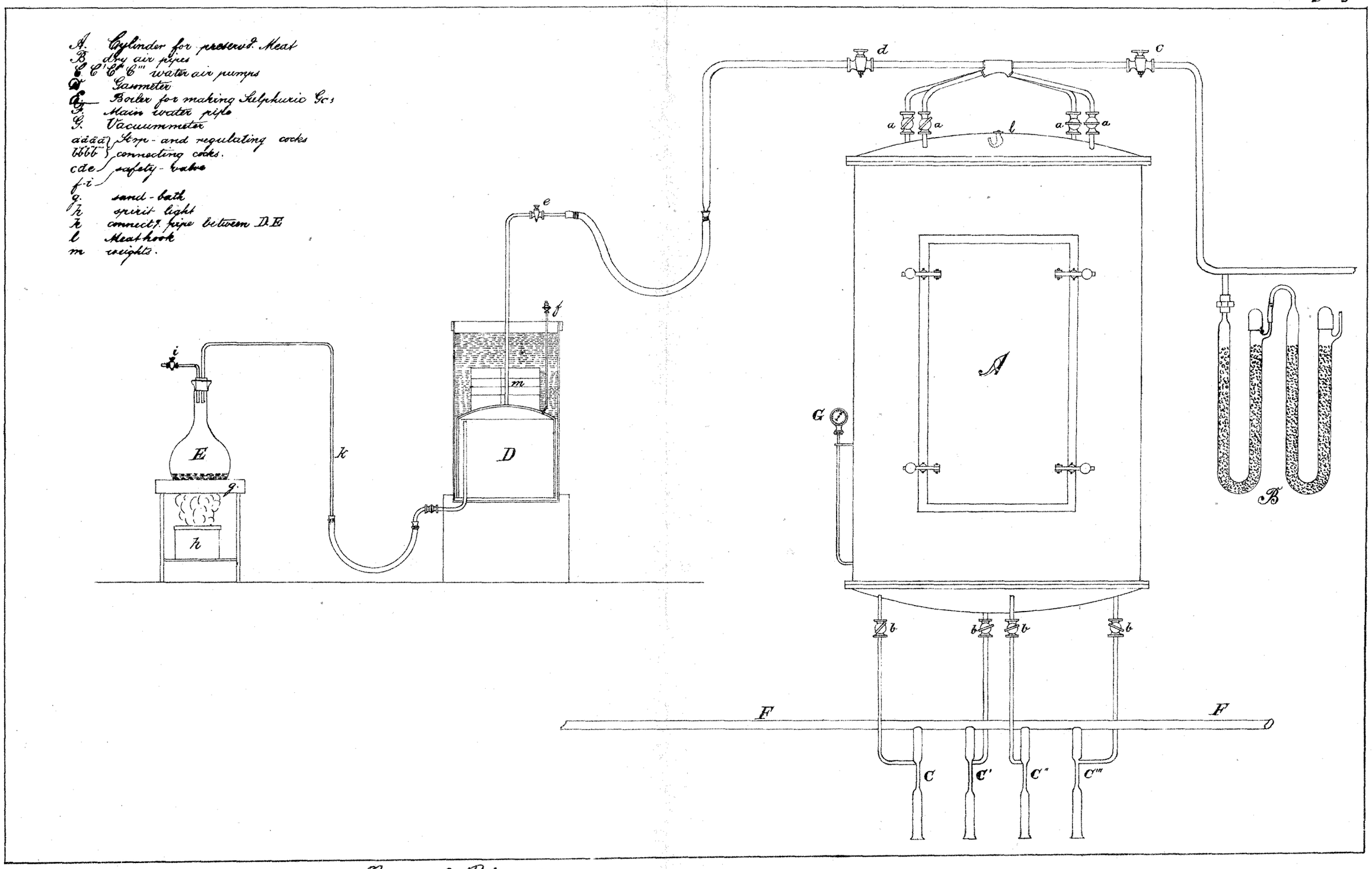

This is the Drawing referred to in the annexed Letters of Registration granted to Christian Heinrich Friedrich Schneeman, John Christian Hermann Baass and Carl Heinrich Florens Müller this twenty sixth — day of July AD 1880 —
(Sig: 357 —)
"Augustus Loftus"

PHOTO-LITHOGRAPHED AT THE GOVT. PRINTING OFFICE, SYDNEY, NEW SOUTH WALES.

A.D. 1880, 4*th August.* No. 861.

M'GOVERN'S IMPROVED DRYING AND PULVERISING APPARATUS.

LETTERS OF REGISTRATION to Mr. James McGovern, for an Improved Drying and Pulverising Apparatus.

[Registered on the 4th day of August, 1880, in pursuance of the Act 16 Vic. No. 24.]

BY His Excellency the Right Honorable Sir Augustus William Frederick Spencer Loftus (commonly called Lord Augustus Loftus), Knight Grand Cross of the Most Honorable Order of the Bath, a Member of Her Majesty's Most Honorable Privy Council, Governor and Commander-in-Chief of the Colony of New South Wales and its Dependencies.

TO ALL TO WHOM THESE PRESENTS SHALL COME, greeting:

WHEREAS James McGovern, of Balmain, in the Colony of New South Wales, engineer, hath by his Petition humbly represented to me that he is the author or designer of a certain invention or improvement in manufactures, that is to say, of an invention of an "Improved Drying and Pulverising Apparatus," which is more particularly described in the specification and the sheet of drawings which are hereunto annexed; and that he, the said Petitioner, hath deposited with the Honorable the Treasurer of the said Colony of New South Wales the sum of Twenty Pounds sterling, for defraying the expense of granting these Letters of Registration, as required by the Act of Council, sixteenth Victoria, number twenty-four; and hath humbly prayed that I would be pleased to grant Letters of Registration, whereby the exclusive enjoyment and advantage of the said invention or improvement might be secured to him for a period of fourteen years: And I, being willing to give encouragement to all inventions and improvements in the arts or manufactures which may be for the public good, and having received a report favourable to the prayer of the said Petition, from competent persons appointed by me to examine and consider the matters stated therein and to report thereon for my information, am pleased, with the advice of the Executive Council, and in exercise of the power and authority given to me by the said Act of Council, to grant, and do by these Letters of Registration grant unto the said James McGovern, his executors, administrators, and assigns, the exclusive enjoyment and advantage of the said invention or improvement, for and during the term of fourteen years from the date hereof; to have, hold, and exercise unto the said James McGovern, his executors, administrators, and assigns, the exclusive enjoyment and advantage thereof, for and during and unto the full end and term of fourteen years from the date of these presents next and immediately ensuing, and fully to be complete and ended: Provided always, that if the said James McGovern shall not, within three days after the granting of these Letters of Registration, register the same in the proper office in the Supreme Court, at Sydney, in the said Colony of New South Wales, then these Letters of Registration, and all advantages whatsoever hereby granted, shall cease and become void.

In witness whereof, I have hereunto set my sign manual, and have caused the present Letters of Registration to be sealed with the seal of the said Colony of New South Wales, at Government House, Sydney, in New South Wales, this fourth day of August, in the year of our Lord one thousand eight hundred and eighty.

[L.S.] AUGUSTUS LOFTUS.

A.D. 1880. No. 861.

McGovern's Improved Drying and Pulverising Apparatus.

SPECIFICATION.

THIS invention is intended for the purpose of drying the waste products and refuse of slaughter-houses, boiling-down establishments, and fœcal matter, with a view of converting it into a fertilizer with superheated or wet steam.

This is effected by means of a revolving iron cylinder supported on rollers at the periphery and at the ends by trunnions, and having a steam jacket enveloping the whole of the drying surface.

Having also on the inside of the drying cylinder a hollow perforated iron shaft running along the centre of the cylinder and supported at one end by means of a bearing, and projecting through the trunnion at the other end carried by this shaft and projecting close to the inside periphery of the drying cylinder are a set of four revolving bars carrying a number of chisel-edged steel knives or scrapers along the whole length of the cylinder and set alternately with a right and left handed pitch; this portion of the apparatus I call an agitator. Attached to the arms and around the shaft of the agitator I fit a drum or cylinder of light iron, the ends of which are turned inwards; this is for the purpose of protecting the perforations in the shaft from being clogged up by the drying matter carried around by the agitator.

In the accompanying drawing, figure 1 is a sectional elevation of the machine; figure 2 is an end view; figure 3 is a detail of gear for altering the pitch of the knives on the agitator.

A is the outer cylinder or jacket. B is the inner or drying cylinder. C C are the ends of the machine carrying the trunnions. *a* is a trunnion through which the steam is admitted and the condensed water ejected. *b b* is a pipe for carrying away the condensed water. *c c* is a pipe in the end for the purpose of admitting a current of air to the drying material. *d d* is a trunnion at the other end of cylinder, and through which the perforated shaft runs. *e e* is a perforated hollow shaft for giving motion to the agitator and carrying away the vapour from the drying refuse. D D is the agitator. *f f f* are the steel knives or scrapers. *g g* is a light iron drum for protecting agitator shaft. E is a steam-tight door for charging the cylinder. *i i i* is a worm wheel and screw for giving motion to the cylinder. *k k* is gear for giving motion to the agitator through the shaft. *e e l l* is a screw for altering the pitch of the knives.

The material to be dried is introduced through the steam-tight door E in the drying cylinder and the machine is set in motion. The cylinder and the agitator revolving in opposite directions causes the material to be brought constantly into contact with new heated surfaces, and at the same time the substance is being briskly agitated alternately to the right and left and pulverised by means of the steel knives or scrapers *f f f*. The steam being turned into the jacket, the vapour from the drying material is allowed to pass through the perforated shaft *e e* and away to the boiler or other furnace, where it is decomposed by passing through the fire.

When the matter has been sufficiently dried or desiccated, the machine is stopped in such a position that the discharging door F is at the bottom side as shown on drawing. The door is opened and two sets of the arms carrying knives with a similar pitch and constructed as shown on detail, figure 3, are made neutral by means of the screw *l l*; that is, they are brought at right angles with the plane of the shaft. The agitator is now set in motion, and the dried material is discharged by the motion of the remaining fixed angled scrapers through the door F. The machine is now ready for another charge.

I now ask that the several parts herein-mentioned in combination or separately be secured to me by Letters of Registration:—

1. The revolving jacketed cylinder with the steam inlet and outlet.
2. The agitator with the hollow perforated shaft.
3. The whole in combination.

The machine shown in the accompanying plan is 4 feet in diameter by 9 feet 6 inches long in the drying chamber, giving an area of nearly 120 superficial feet per revolution.

This machine will produce about two tons of dried waste product per day of eight hours, is noiseless in its action and without creating any nuisance whatever, as the refuse is dried in an air-tight chamber and the vapours conveyed away by a pipe to a furnace. As the refuse is dried by the aid of steam it cannot become carbonised, and the greatest maximum quantity of the manurial constituents of the refuse is therefore retained in the product.

This machine can be constructed at a cost of about £200, and will form the most economical and efficient drying machine for this purpose.

JAMES McGOVERN.

This is the specification referred to in the annexed Letters of Registration granted to James McGovern, this fourth day of August, A.D. 1880.

AUGUSTUS LOFTUS.

REPORT.

Sir, Sydney, 3 July, 1880.

In the matter of the application of Mr. James McGovern for Letters of Registration for an "Improved Drying and Pulverising Apparatus," which has been referred to us, we have examined the specification and drawings accompanying the same, and have now the honor to report that we see no objection to granting the prayer of the Petition. We have, &c.,

J. SMITH.

The Principal Under Secretary. CHAS. WATT.

[Drawings—one sheet.]

McGOVERNS IMPROVED DRYING AND PULVERIZING APPARATUS

Fig. 1.

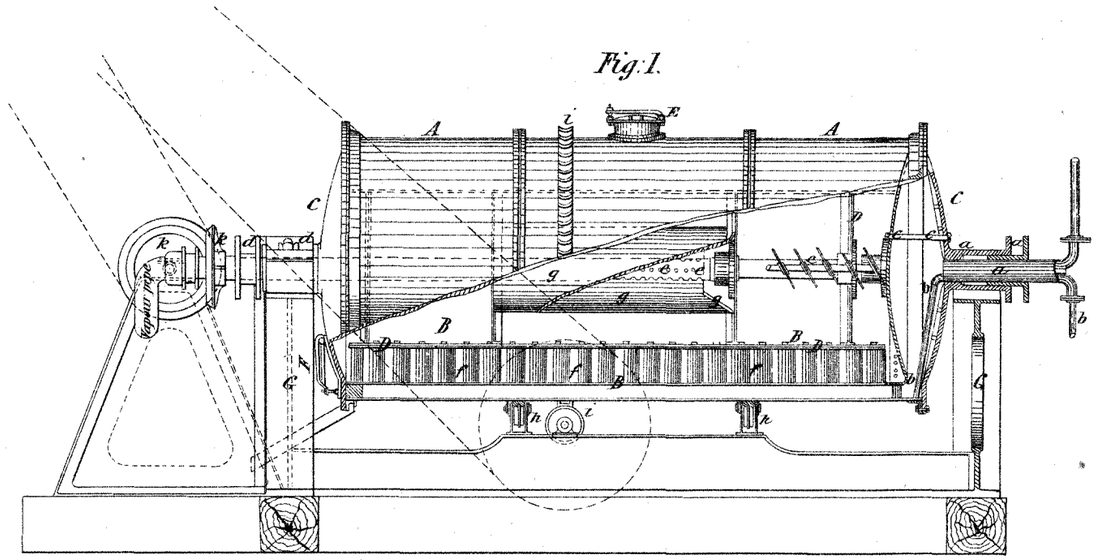

Fig. 2.

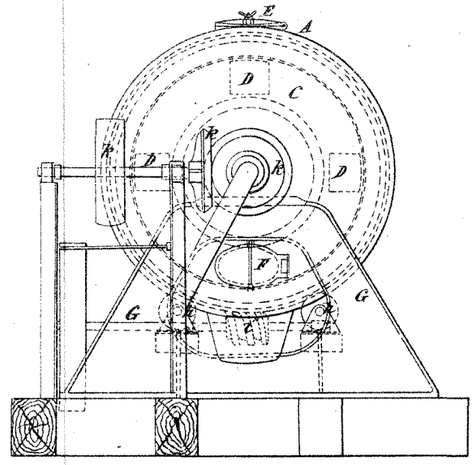

Fig. 3.

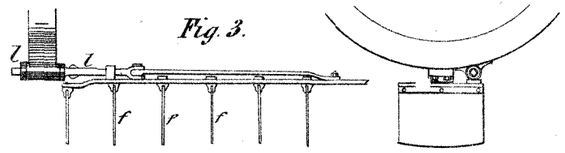

Detail shewing Gear for altering pitch of Agitators.

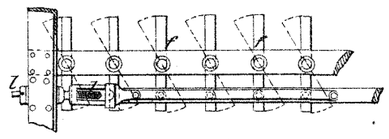

James McGovern.

This is the Sheet of Drawings referred to in the annexed Letters of Registration granted to James McGovern, this fourth day of August, A.D. 1880.

Augustus Loftus.

PHOTO-LITHOGRAPHED AT THE GOVT. PRINTING OFFICE, SYDNEY, NEW SOUTH WALES.

A.D. 1880, 13*th August.* No. 862.

THE EUREKA LUBRICATING COMPOUND COMPANY'S LUBRICANT AND CUP.

LETTERS OF REGISTRATION to James Knox Newton, for the "Eureka Lubricating Compound Company's Lubricant and Cup."

[Registered on the 14th day of August, 1880, in pursuance of the Act 16 Vic. No. 24.]

BY His Excellency the Right Honorable Sir Augustus William Frederick Spencer Loftus (commonly called Lord Augustus Loftus), Knight Grand Cross of the Most Honorable Order of Bath, a Member of Her Majesty's Most Honorable Privy Council, Governor and Commander-in-Chief of the Colony of New South Wales and its Dependencies.

TO ALL TO WHOM THESE PRESENTS SHALL COME, greeting:

WHEREAS James Knox Newton, of No. 5, King-street, Sydney, in the Colony of New South Wales, engineer, hath by his Petition humbly represented to me that he is the author or designer of a certain invention or improvement in manufactures, that is to say, of an invention of an "Improvement in the manufacture of a Lubricant and Cup to be called 'The Eureka Lubricating Compound Company's Lubricant and Cup,'" which is more particularly described in the specification and the sheet of drawings which are hereunto annexed; and that he, the said Petitioner, hath deposited with the Honorable the Treasurer of the said Colony of New South Wales, the sum of Twenty Pounds sterling, for defraying the expense of granting these Letters of Registration, as required by the Act of Council, sixteenth Victoria, number twenty-four; and hath humbly prayed that I would be pleased to grant Letters of Registration, whereby the exclusive enjoyment and advantage of the said invention or improvement might be secured to him for a period of fourteen years: And I, being willing to give encouragement to all inventions and improvements in the arts or manufactures which may be for the public good, and having received a report favourable to the prayer of the said Petition, from competent persons appointed by me to examine and consider the matters stated therein and to report thereon for my information, am pleased, with the advice of the Executive Council, and in exercise of the power and authority given to me by the said Act of Council, to grant, and do by these Letters of Registration grant unto the said James Knox Newton, his executors, administrators, and assigns, the exclusive enjoyment and advantage of the said invention or improvement, for and during the term of fourteen years from the date hereof; to have, hold, and exercise unto the said James Knox Newton, his executors, administrators, and assigns, the exclusive enjoyment and advantage thereof, for and during and unto the full end and term of fourteen years from the date of these presents next and immediately ensuing, and fully to be complete and ended: Provided always, that if the said James Knox Newton shall not, within three days after the granting of these Letters of Registration, register the same in the proper office in the Supreme Court, at Sydney, in the said Colony of New South Wales, then these Letters of Registration, and all advantages whatsoever hereby granted, shall cease and become void.

In witness whereof, I have hereunto set my sign manual, and have caused the present Letters of Registration to be sealed with the seal of the said Colony of New South Wales, at Government House, Sydney, in New South Wales, this thirteenth day of August, in the year of our Lord one thousand eight hundred and eighty.

[L.S.]

AUGUSTUS LOFTUS.

The Eureka Lubricating Compound Company's Lubricant and Cup.

TO ALL TO WHOM THESE PRESENTS SHALL COME: I, JAMES KNOX NEWTON, of the State of California, in the United States of America, but now of No. 5, King-street, Sydney, in the Colony of New South Wales, engineer, send greeting:

WHEREAS I am desirous to obtain Letters of Registration for securing unto me Her Majesty's special license that I, my executors, administrators, and assigns, and such others as I or they shall at any time agree with, and no others, shall and lawfully may, from time to time, and at all times during the term of fourteen years, to be computed from the day on which this instrument is left at the Office of the Colonial Secretary, Sydney, make and execute, use and vend within the Colony of New South Wales an invention of an improvement in the manufacture of a lubricant and cup to be called "The Eureka Lubricating Compound Company's Lubricant and Cup," as more particularly described and shown in the following specification and accompanying plan, that is to say:—

SPECIFICATION.

THE article, invention, improvement, or combination relates to that class of articles by which the rapid working of machinery may be secured from friction, heating, or impediment, and its object is to effect such operation with the greatest ease and certainty, and at the least cost in money and time. The lubricant is compounded of the following substances and oils in determinate proportions. 1. Mutton tallow, $\frac{3}{16}$ of ℔. 2. Lard, $\frac{3}{16}$. 3. Lard oil, $\frac{3}{16}$. 4. Palm oil, $\frac{3}{16}$. 5. Sweet oil of almonds, $\frac{3}{16}$. 6. Essential oil of almonds, $\frac{1}{32}$. 7. Pulverized white-lead, $\frac{1}{32}$; and 8. Kerosene shale as required. These substances and oils by a perfect manipulation and mixture by heat are brought to a consistency to flow freely as desired, down the copper conductor through the opening in the bottom of the cup to the bearings where the lubrication is needed. 2. The cup. The screwed cup is to be formed of such metal as may be chosen, lined with tin to prevent corrosion or fouling by verdigris; it has a screwed cup or hinged cover, and a conductor made in cases of copper twisted or fluted, or with a spring, as the case may require, leading from the lubricant placed in the cup to the outlet at the bottom of the cup, by which it slowly and continually escapes to lubricate such part or parts as may need such lubrication.

CLAIMS.

I do not claim either specially or generally anything heretofore accorded to others. I do claim specially,—

1. The lining of the cup by tin, so as to prevent corrosion or fouling by verdigris.
2. The particular composition of the lubricant as described; and
3. The spiral spring at the top of the copper twisted or fluted conductor, which prevents use of lubricant beyond what is required to lubricate bearings, and thus to accomplish saving in labour and material, and consequently in cost, and the combination of the whole article as substantially above described.

In witness whereof, I, the said James Knox Newton, have set my hand and seal, this thirtieth day of June, in the year of our Lord one thousand eight hundred and eighty.

JAMES KNOX NEWTON.

Signed, sealed, and delivered by the said James Knox Newton, in the presence of HENRY HALLORAN.

This is the specification referred to in the annexed Letters of Registration granted to James Knox Newton, this thirteenth day of August, A.D. 1880.

AUGUSTUS LOFTUS.

REPORT.

Sydney, 14 July, 1880.

Sir,

The application of Mr. James K. Newton for Letters of Registration for "The Eureka Lubricating Compound Company's Lubricant and Cup" having been referred to us, we have examined the specification and drawings accompanying the same, and have now the honor to report that we see no objection to the issue of Letters of Registration as prayed for.

We have, &c.,

J. SMITH.
E. C. CRACKNELL.

The Principal Under Secretary.

[Drawings—one sheet.]

DRAWING OF
THE EUREKA LUBRICATING COMPOUND COMPANY'S
LUBRICANT & CUPS

Scale.



Elevation.
Fig. 1.

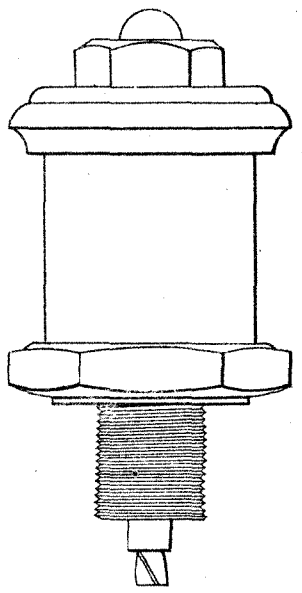

Fig. 2.

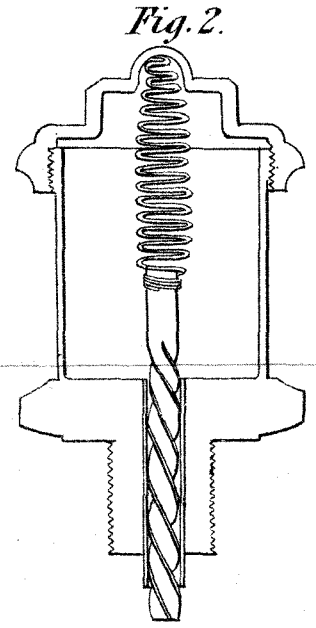

Section.

Fig. 3.

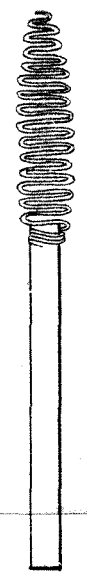

Fig. 4.

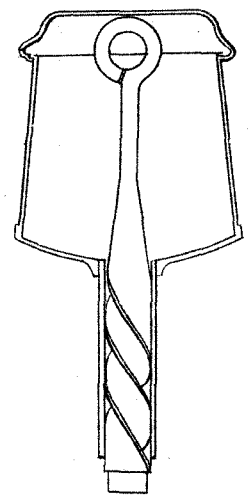

Section.

Fig. 5.

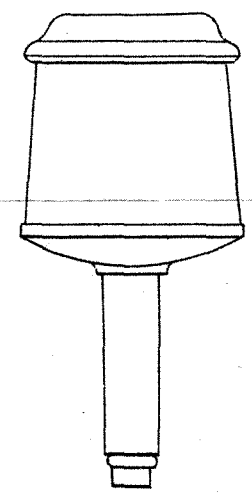

Elevation

This is the Sheet of Drawings referred to in the annexed Letters of Registration granted to James Knox Newton, this thirteenth day of August A. D. 1880.

Augustus Loftus.

(Sig. 357.)

PHOTO-LITHOGRAPHED AT THE GOVT. PRINTING OFFICE,
SYDNEY, NEW SOUTH WALES.

A.D. 1880, 13*th August*. No. 863.

AUTOMATIC COUPLING AND UNCOUPLING APPARATUS.

LETTERS OF REGISTRATION to Edwin Robins Thomas and George Cowdery, for an Automatic Coupling and Uncoupling Apparatus for Railway and other rolling-stock.

[Registered on the 14th day of August, 1880, in pursuance of the Act 16 Vic. No. 24.]

BY His Excellency the Right Honorable Sir Augustus William Frederick Spencer Loftus (commonly called Lord Augustus Loftus), Knight Grand Cross of the Most Honorable Order of the Bath, a Member of Her Majesty's Most Honorable Privy Council, Governor and Commander-in-Chief of the Colony of New South Wales and its Dependencies.

TO ALL TO WHOM THESE PRESENTS SHALL COME, greeting:

WHEREAS Edwin Robins Thomas, of Marrickville, in the Colony of New South Wales, and George Cowdery, of Burwood, in the said Colony, have by their Petition humbly represented to me that they are the authors or designers of a certain invention or improvement in manufactures, that is to say, of an invention of "An Automatic Coupling and Uncoupling Apparatus for Railway and other rolling-stock," which is more particularly described in the amended specification and the sheet of drawings which are hereunto annexed; and that they, the said Petitioners, have deposited with the Honorable the Treasurer of the said Colony of New South Wales the sum of Twenty Pounds sterling, for defraying the expense of granting these Letters of Registration, as required by the Act of Council, sixteenth Victoria, number twenty-four; and have humbly prayed that I would be pleased to grant Letters of Registration, whereby the exclusive enjoyment and advantage of the said invention or improvement might be secured to them for a period of fourteen years: And I, being willing to give encouragement to all inventions and improvements in the arts or manufactures which may be for the public good, and having received a report favourable to the prayer of the said Petition, from competent persons appointed by me to examine and consider the matters stated therein and to report thereon for my information, am pleased, with the advice of the Executive Council, and in exercise of the power and authority given to me by the said Act of Council, to grant, and do by these Letters of Registration grant unto the said Edwin Robins Thomas and George Cowdery, their executors, administrators, and assigns, the exclusive enjoyment and advantage of the said invention or improvement, for and during the term of fourteen years from the date hereof; to have, hold, and exercise unto the said Edwin Robins Thomas and George Cowdery, their executors, administrators, and assigns, the exclusive enjoyment and advantage thereof, for and during and unto the full end and term of fourteen years from the date of these presents next and immediately ensuing, and fully to be complete and ended; Provided always, that if the said Edwin Robins Thomas and George Cowdery shall not, within three days after the granting of these Letters of Registration, register the same in the proper office in the Supreme Court, at Sydney, in the said Colony of New South Wales, then these Letters of Registration, and all advantages whatsoever hereby granted, shall cease and become void.

In witness whereof, I have hereunto set my sign manual, and have caused the present Letters of Registration to be sealed with the seal of the said Colony of New South Wales, at Government House, Sydney, in New South Wales, this thirteenth day of August, in the year of our Lord one thousand eight hundred and eighty.

[L.S.] AUGUSTUS LOFTUS.

SPECIFICATION

A.D. 1880. No. 863.

Automatic Coupling and Uncoupling Apparatus.

SPECIFICATION of an Invention by EDWIN ROBINS THOMAS and GEORGE COWDERY, for the purpose of coupling and uncoupling Railway, Tramway, or other rolling-stock, without the necessity of the persons employed in such operations passing between the engines, trucks, or other rolling-stock.

THIS invention consists in attaching to the several draw-bars of the rolling-stock self-adjusting hooks and links alternately (or as the case may require, in the making up of trains), and also of attaching to the draw-bars, on which these hooks are attached, levers which act upon stops, which lock or unlock (at the will of the attendant) the hooks and links, securing or releasing the rolling-stock as desired (*see drawing*). The levers and stops (connected) are caused to return (after the unlocking process) to their original position by a spiral spring, balance weight, or other convenient arrangement. Each or any number of carriages, trucks, &c., can be detached by the attendant by means of a lever or levers at either side of the rolling-stock, without passing between the rolling-stock (*see drawing*).

The drawings herewith will describe more fully and particularly the working parts of this invention, which are of the most simple construction, and are even less liable to injury from wear than those at present in use.

The inventors propose, by the means herein stated, to couple or lock together rolling-stock of every description, automatically, by merely running the carriages or other kind of rolling-stock together with the ordinary force used in the operation of making up a train, and of uncoupling the same without the necessity of passing between the rolling-stock. The operations of coupling and uncoupling will be accomplished by this invention instantaneously.

The inventors claim the use and invention of a tumbling hook and adjustable link (of the forms shown in the accompanying drawings, or of similar forms to suit every description of rolling-stock) fitted to the draw-bars, and they also claim the manner in which the hooks and links are locked or unlocked by means of levers fitted to the draw-bars and the stops.

The hook, while in position for coupling (*see drawing*) locked by the stop acted upon by the levers, forms an inclined plane for the adjustable link to slide over when the carriages, trucks, or other rolling-stock are brought in contact, when they become instantly coupled, and with a sufficient strain upon the buffers.

The levers can be used on either side of the rolling-stock for locking or unlocking the tumbling hook and adjustable link (*see drawing*).

The advantages to be derived from this invention are as under, viz. :—

1. Security to life and limb, as compared with the present most dangerous occupation of coupling and uncoupling rolling-stock, as by this invention there is not any necessity whatever to pass between the rolling-stock in making up a train, or in releasing one or more carriages, trucks, &c., from the train.
2. An immense saving of time and labour in making up trains or disengaging any portion of the train, therefore a consequent reduction of the working expenses.
3. The adaptability to all and every kind of rolling-stock, and also its adjustability to the heights of rolling-stock caused by a difference in the load or the construction. This is an important consideration.
4. The remarkable simplicity of all the working parts. These parts can be made equal to any strain, and are from their simplicity less liable to derangement than those at present in use. They do not require any high class skill in workmanship for their manufacture, merely ordinary care as to the quality and soundness of the material.
5. Rolling-stock can, by the means herein described, be instantly coupled or uncoupled, whether on curves or on the straight. In fact, there is not any likely condition that would make it unworkable.

NOTE.—A model, the full size, has been constructed for the further explanation of the working of this invention, which may be seen when required.

Signed—June 21, 1880.

EDWIN R. THOMAS,
Alma Cottage, Alma Lane, Stanmore Road, Marrickville, N.S.W.

GEORGE GOWDERY,
Albert Street, Burwood, N.S.W.

This is the amended specification referred to in the amended Letters of Registration granted to Edwin Robins Thomas and George Cowdery, this thirteenth day of August, 1880.

AUGUSTUS LOFTUS.

REPORTS.

Sir, Sydney, 14 June, 1880.

We do ourselves the honor to report, in reply to your blank cover communication of the 1st instant, No. 4,386, transmitting the Petition, specification, drawings, and claim of Messrs. Edwin Robins Thomas and George Cowdery, for Letters of Registration for an "Automatic Coupling and Uncoupling Apparatus for Railway and other rolling-stock," that we are of opinion that Messrs. Thomas and Cowdery's claim cannot be granted, inasmuch as it seeks to secure the "principle" of locking or coupling rolling-stock automatically.

We have, &c.,
GOTHER K. MANN.
JOHN WHITTON.

The Principal Under Secretary.

Sir,

Automatic Coupling and Uncoupling Apparatus.

Sir,

Sydney, 8 July, 1880.

We do ourselves the honor to state that we see no objection to the issue of Letters of Registration in favour of Messrs. George Cowdery and E. R. Thomas, for their invention of an "Automatic Coupling and Uncoupling Apparatus for Railway and other rolling-stock," in accordance with their Petition, specification, drawings, and revised claim, transmitted for our report under your blank cover communication of the 28th ultimo, No. 5,220.

We have, &c.,
GOTHER K. MANN.
JOHN WHITTON.

The Principal Under Secretary.

[Drawings—one sheet.]

AUTOMATIC COUPLING AND UNCOUPLING MACHINE.

For Railway and other Rolling Stock.

Scale of Feet.

0 1 2 3

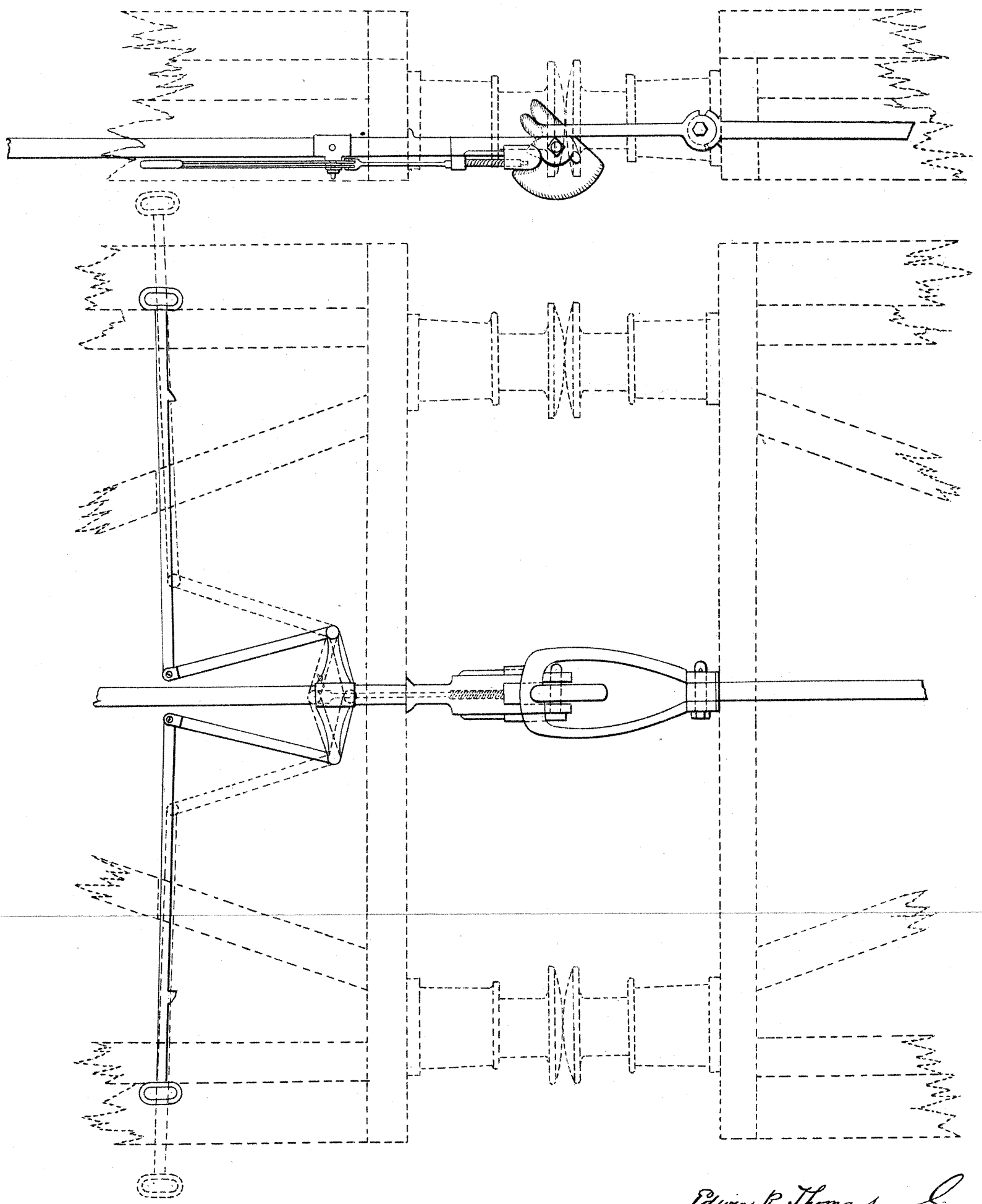

Edwin R. Thomas
Alma Cottage
Alma Lane
Hanmer Road
Manickville
N. S. Wales
31/5/80.

George Cowdery
Albert Street
Burwood
N. S. Wales.
31/5/80

This is the Sheet of Drawings referred to in the annexed Letters of Registration granted to Edwin Robins Thomas, and George Cowdery, this thirteenth day of August, A.D. 1880.

Augustus Loftus.

Sig. 357.

PHOTO-LITHOGRAPHED AT THE GOVT. PRINTING OFFICE, SYDNEY, NEW SOUTH WALES.

A.D. 1880, 13*th August.* No. 864.

IMPROVED SUN-LIGHT REFLECTOR.

LETTERS OF REGISTRATION to James Andrew Penson, for an Improved Sun-light Reflector.

[Registered on the 14th day of August, 1880, in pursuance of the Act 16 Vic. No. 24.]

BY His Excellency the Right Honorable Sir Augustus William Frederick Spencer Loftus (commonly called Lord Augustus Loftus), Knight Grand Cross of the Most Honorable Order of the Bath, a Member of Her Majesty's Most Honorable Privy Council, Governor and Commander-in-Chief of the Colony of New South Wales and its Dependencies.

TO ALL TO WHOM THESE PRESENTS SHALL COME, greeting:

WHEREAS James Andrew Penson, of Pitt-street, Sydney, in the Colony of New South Wales, plumber and gas-fitter, hath by his Petition humbly represented to me that he is the author or designer of a certain invention or improvement in manufactures, that is to say, of an invention of an "Improved Sun-light Reflector," which is more particularly described in the amended specification and the sheet of drawings which are hereunto annexed; and that he, the said Petitioner, hath deposited with the Honorable the Treasurer of the said Colony of New South Wales the sum of Twenty Pounds sterling, for defraying the expense of granting these Letters of Registration, as required by the Act of Council, sixteenth Victoria, number twenty-four; and hath humbly prayed that I would be pleased to grant Letters of Registration, whereby the exclusive enjoyment and advantage of the said invention or improvement might be secured to him for a period of fourteen years: And I, being willing to give encouragement to all inventions and improvements in the arts or manufactures which may be for the public good, and having received a report favourable to the prayer of the said Petition, from competent persons appointed by me to examine and consider the matters stated therein, and to report thereon for my information, am pleased, with the advice of the Executive Council, and in exercise of the power and authority given to me by the said Act of Council, to grant, and do by these Letters of Registration grant unto the said James Andrew Penson, his executors, administrators, and assigns, the exclusive enjoyment and advantage of the said invention or improvement, for and during the term of fourteen years from the date hereof; to have, hold, and exercise unto the said James Andrew Penson, his executors, administrators, and assigns, the exclusive enjoyment and advantage thereof, for and during and unto the full end and term of fourteen years from the date of these presents next and immediately ensuing, and fully to be complete and ended: Provided always, that if the said James Andrew Penson shall not, within three days after the granting of these Letters of Registration, register the same in the proper office in the Supreme Court, at Sydney, in the said Colony of New South Wales, then these Letters of Registration, and all advantages whatsoever hereby granted, shall cease and become void.

In witness whereof, I have hereunto set my sign manual, and have caused the present Letters of Registration to be sealed with the seal of the said Colony of New South Wales, at Government House, Sydney, in New South Wales, this thirteenth day of August, in the year of our Lord one thousand eight hundred and eighty.

[L.S.] AUGUSTUS LOFTUS.

A.D. 1880. No. 864.

Improved Sun-light Reflector.

AMENDED SPECIFICATION of JAMES ANDREW PENSON, of Pitt-street, Sydney, in the Colony of New South Wales, plumber and gas-fitter, of an Improved Sun-light Reflector.

WHEREAS I am the inventor of a lamp consisting of a fountain so constructed that it has the capability of supplying an indefinite number of branch burners with the requisite quantity of oil, for the purpose of illumination, and have also arranged the same to be used with a double opal-glass reflector, which has the effect of greatly increasing the power of the light, which invention I have called an "Improved Sun-light Reflector":

Now know ye that I, the said James Andrew Penson, do hereby declare the nature of the said invention, and in what manner the apparatus is to be made, to be particularly described and ascertained by the following statement, that is to say—I construct with a metal frame a canopy, A, fig. 1, having an opening B at the top, and formed by an indefinite number of wedge-shaped opal-glass reflectors, C, inserted in the said frame and through the opening B. I insert a second reflector D, composed of the same wedge-shaped opal-glass material, elongated in form, and wider at the top than at the bottom. This second reflector covers a tube E, to which a metal fountain F is fixed, intended and constructed to contain a supply of oil for any number of kerosene burners without the necessity of a separate receptacle for each burner, and by being suspended a little within the reflector D, is so arranged that the air can pass through the reflector. The apparatus can be adapted to the use of gas by affixing to the tube E, fig. 2, a ring-burner G instead of the fountain F.

It will be seen that the number, shape, and size of the reflectors, as well as the materials of which both they and the several parts of the apparatus forming the lamp are composed, can be altered or varied without departing from the nature of my invention; but what I claim is—

The combination and arrangement of parts which adapt my kerosene lamp before described to the supply of an indefinite number of burners without a separate fountain, and its consequent shade for each burner; and also the combination of the said lamp with and its adaptation to the said reflectors, substantially as hereinbefore described, explained, and figured.

Dated in Sydney, this 30th day of June, 1880. J. A. PENSON.

This is the amended specification referred to in the annexed Letters of Registration granted to James Andrew Penson, this thirteenth day of August, A.D. 1880.

AUGUSTUS LOFTUS.

REPORTS.

Sir, Sydney, 24 June, 1880.

The application of Mr. J. A. Penson for Letters of Registration for an "Improved Sun-light Reflector" having been referred to us, we have examined the specification and drawings accompanying the same, and have now the honor to report that we are unable to recommend the prayer of the Petition.

The only proposed novelty in the specification is the use of opal-glass reflectors; but these have been in public use at the General Post Office, both outside and inside the building, for several years. Such public use bars the present application.

We have, &c.,
J. SMITH.
JAMES BARNET.

The Principal Under Secretary.

Sir, Sydney, 8 July, 1880.

In the matter of the application of Mr. J. A. Penson for Letters of Registration for an "Improved Sun-light Reflector," on which we reported unfavourably under date 24th June, and which has been referred back to us with an amended specification, in which a claim is made for a particular "combination and arrangement of parts," constituting an improved lamp with opal-glass reflectors, we have the honor to report that sufficient novelty is now disclosed to warrant protection by Letters of Registration, and we therefore recommend that these be granted for the lamp substantially as described and shown as fig. 1 of the drawing.

We have, &c.,
J. SMITH.
JAMES BARNET.

The Principal Under Secretary.

[Drawings—one sheet.]

PENSON'S IMPROVED SUNLIGHT REFLECTOR

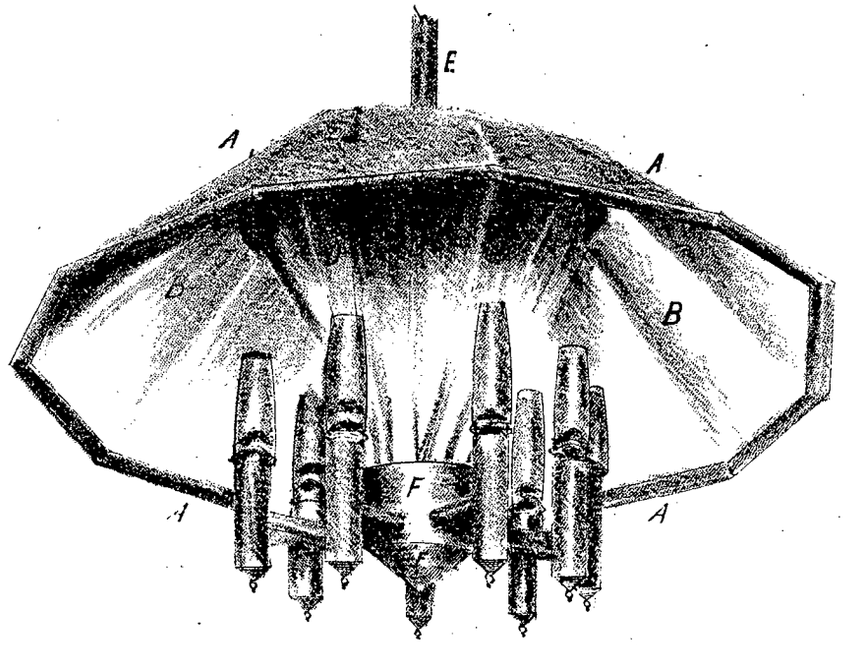

FIG. 1.

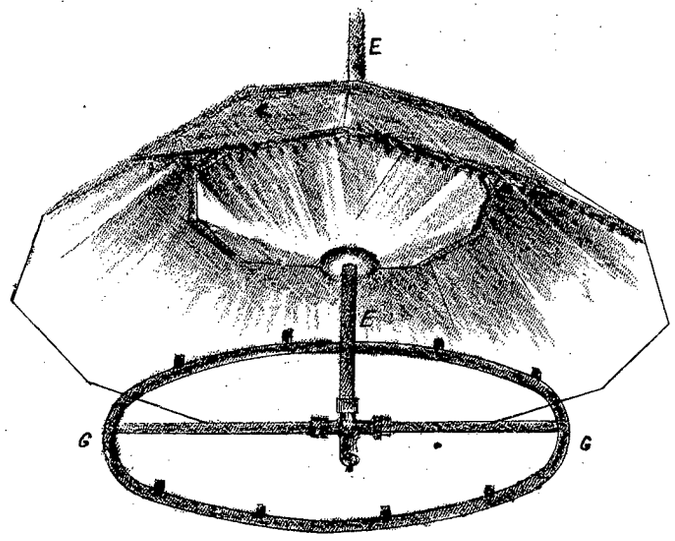

FIG. 2.

This is the Sheet of Drawings referred to in the annexed Letters of Registration granted to James Andrew Penson, this thirtieth day of August, A.D. 1880.

Augustus Loftus

(Sig. 357.)

A.D. 1880, 13*th August.* No. 865.

A NOVEL PROCESS FOR THE PRESERVATION OF BUTTER.

LETTERS OF REGISTRATION to Thomas Foster Wilkins, for a Novel Process for the Preservation of Butter.

[Registered on the 14th day of August, 1880, in pursuance of the Act 16 Vic. No. 24.]

BY His Excellency the Right Honorable Sir Augustus William Frederick Spencer Loftus (commonly called Lord Augustus Loftus), Knight Grand Cross of the Most Honorable Order of the Bath, a Member of Her Majesty's Most Honorable Privy Council, Governor and Commander-in-Chief of the Colony of New South Wales and its Dependencies.

TO ALL TO WHOM THESE PRESENTS SHALL COME, greeting:

WHEREAS Thomas Foster Wilkins, of Upper Baker-street, London, in the County of Middlesex, in the Kingdom of England, hath by his Petition humbly represented to me that he is the author or designer of a certain invention or improvement in manufactures, that is to say, of an invention entitled a "Novel Process for the Preservation of Butter," which is more particularly described in the specification which is hereunto annexed; and that he, the said Petitioner, hath deposited with the Honorable the Treasurer of the said Colony of New South Wales the sum of Twenty Pounds sterling, for defraying the expense of granting these Letters of Registration, as required by the Act of Council, sixteenth Victoria, number twenty-four; and hath humbly prayed that I would be pleased to grant Letters of Registration, whereby the exclusive enjoyment and advantage of the said invention or improvement might be secured to him for a period of fourteen years: And I, being willing to give encouragement to all inventions and improvements in the arts or manufactures which may be for the public good, and having received a report favourable to the prayer of the said Petition, from competent persons appointed by me to examine and consider the matters stated therein and to report thereon for my information, am pleased, with the advice of the Executive Council, and in exercise of the power and authority given to me by the said Act of Council, to grant, and do by these Letters of Registration grant unto the said Thomas Foster Wilkins, his executors, administrators, and assigns, the exclusive enjoyment and advantage of the said invention or improvement, for and during the term of fourteen years from the date hereof; to have, hold, and exercise unto the said Thomas Foster Wilkins, his executors, administrators, and assigns, the exclusive enjoyment and advantage thereof, for and during and unto the full end and term of fourteen years from the date of these presents next and immediately ensuing, and fully to be complete and ended: Provided always, that if the said Thomas Foster Wilkins shall not, within three days after the granting of these Letters of Registration, register the same in the proper office in the Supreme Court, at Sydney, in the said Colony of New South Wales, then these Letters of Registration, and all advantages whatsoever hereby granted, shall cease and become void.

In witness whereof, I have hereunto set my sign manual, and have caused the present Letters of Registration to be sealed with the seal of the said Colony of New South Wales, at Government House, Sydney, in New South Wales, this thirteenth day of August, in the year of our Lord one thousand eight hundred and eighty.

[L.S.] AUGUSTUS LOFTUS

SPECIFICATION

A.D. 1880. No. 865.

A Novel Process for the Preservation of Butter.

SPECIFICATION of THOMAS FOSTER WILKINS, of Upper Baker-street, London, in the County of Middlesex, in the Kingdom of England, for an invention entitled a "Novel Process for the Preservation of Butter."

THE object of my invention is the preservation of butter by means of glacial metaphosphoric acid.

My process is as follows :—

I spread the butter in a thin layer upon a damp cloth steeped in a dilute solution of the preserving agent (say one dram to a pint of water), and make dents or cavities in various parts of it. I then take of glacial metaphosphoric acid in a concentrated solution (say) twenty-four grains of acid for every pound weight of butter, and pour this solution into the said dents or cavities. I then take the ends of the damp cloth which surrounds and underlies the butter and wrap the cloth carefully over the whole mass, which is then well beaten by hand, or preferably with a spat or mallet, the beating being continued until the preservative is thoroughly mixed, blended, and incorporated with the butter.

The preservative process is then complete, and the butter thus prepared may be placed in crocks or tubs or be otherwise delivered to commerce or to domestic use.

The above described method of blending the preservative agent with the butter I have found to answer well, but in preparing large quantities of butter the blending of the preservative agent with the butter may be more conveniently effected by means of a butter worker or other suitable apparatus.

Instead of applying the glacial metaphosphoric acid in a concentrated solution I might apply it in a solid crushed state, but although I consider that the preservative agent in this solid state might in some cases be advantageous, yet the difficulty of thoroughly blending the same with the butter leads me to give preference to the use of the acid in solution.

The concentrated solution which I have found to answer well is twenty-four grains of acid dissolved in from one half to one dram of water, which water I prefer should be distilled.

I would observe that it is preferable that the butter should be treated with the preservative agent when taken from the churn and the buttermilk thoroughly expressed from it, and it will be understood that the quantity of salt usually added to fresh butter is also added to butter preserved by my process.

Butter prepared as I have above set forth will keep for two months, and probably for a much longer time, and that without any particular mode of packing.

Having now described and ascertained the nature of my said invention, and in what manner the same is or may be performed, I would have it distinctly understood that I do not confine myself to the relative proportions hereinbefore given, as such may be varied to suit various kinds of butter, the length of time for which it is desired to preserve the butter, the atmospheric conditions under which it is prepared, and other causes; the proportion of glacial metaphosphoric acid will not, however, in any case exceed one dram of acid to one pound of butter.

What I claim as my invention is—

The preservation of butter by mixing, blending, and incorporating glacial metaphosphoric acid therewith, substantially as hereinbefore specified.

In witness whereof, I, the said Thomas Foster Wilkins, have hereunto set my hand and seal, this fifteenth day of May, 1880.

THOMAS FOSTER WILKINS.

Witnesses—

WILLIAM EDWARD GEDGE,
Patent Agent,
No. 11, Wellington-street, Strand, London, England.

JOHN FOSTER LENNOX SYKES,
Clerk to the said W. E. Gedge,
No. 11, Wellington-street, Strand, London, England.

This is the specification referred to in the annexed Letters of Registration granted to Thomas Foster Wilkins, this thirteenth day of August, A.D. 1880.

AUGUSTUS LOFTUS.

REPORT.

Sir, Sydney, 12 July, 1880.

The application of Mr. Thomas F. Wilkins for Letters of Registration for a "Novel Process for the Preservation of Butter," having been referred to us, we have examined the specification accompanying the same, and have now the honor to report that we see no objection to the issue of Letters of Registration as prayed for.

We have, &c.,
J. SMITH.
CHAS. WATT.

The Principal Under Secretary.

No. 866.

[Assignment of No. 765. See Letters of Registration for 1879, page 109.]

A.D. 1880, 25*th August.* No. 867.

IMPROVEMENTS IN APPARATUS FOR HUSKING AND CLEANING RICE, &c.

LETTERS OF REGISTRATION to John Fisher, for Improvements in Apparatus for Husking and Cleaning Rice or other Grain, and for Pulverizing and Mixing Mortar, Cement, or other materials.

[Registered on the 26th day of August, 1880, in pursuance of the Act 16 Vic. No. 24.]

BY HIS EXCELLENCY THE RIGHT HONORABLE SIR AUGUSTUS WILLIAM FREDERICK SPENCER LOFTUS (commonly called LORD AUGUSTUS LOFTUS), Knight Grand Cross of the Most Honorable Order of the Bath, a Member of Her Majesty's Most Honorable Privy Council, Governor and Commander-in-Chief of the Colony of New South Wales and its Dependencies.

TO ALL TO WHOM THESE PRESENTS SHALL COME, greeting:

WHEREAS JOHN FISHER, of London, in the County of Middlesex, England, hath by his Petition humbly represented to me that he is the author or designer of a certain invention or improvement in manufactures, that is to say, of an invention entitled "Improvements in Apparatus for Husking and Cleaning Rice or other Grain, and for Pulverizing and Mixing Mortar, Cement, or other materials," which is more particularly described in the specification, marked A, and the three sheets of drawings, marked B, C, and D respectively, which are hereunto annexed; and that he, the said Petitioner, hath deposited with the Honorable the Treasurer of the said Colony of New South Wales the sum of Twenty Pounds sterling, for defraying the expense of granting these Letters of Registration, as required by the Act of Council, sixteenth Victoria, number twenty-four; and hath humbly prayed that I would be pleased to grant Letters of Registration, whereby the exclusive enjoyment and advantage of the said invention or improvement might be secured to him for a period of fourteen years: And I, being willing to give encouragement to all inventions and improvements in the arts or manufactures which may be for the public good, and having received a report favourable to the prayer of the said Petition, from competent persons appointed by me to examine and consider the matters stated therein and to report thereon for my information, am pleased, with the advice of the Executive Council, and in exercise of the power and authority given to me by the said Act of Council, to grant, and do by these Letters of Registration grant unto the said John Fisher, his executors, administrators, and assigns, the exclusive enjoyment and advantage of the said invention or improvement, for and during the term of fourteen years from the date hereof; to have, hold, and exercise unto the said John Fisher, his executors, administrators, and assigns, the exclusive enjoyment and advantage thereof, for and during and unto the full end and term of fourteen years from the date of these presents next and immediately ensuing, and fully to be complete and ended: Provided always, that if the said John Fisher shall not, within three days after the granting of these Letters of Registration, register the same in the proper office in the Supreme Court, at Sydney, in the said Colony of New South Wales, then these Letters of Registration, and all advantages whatsoever hereby granted, shall cease and become void.

In witness whereof, I have hereunto set my sign manual, and have caused the present Letters of Registration to be sealed with the seal of the said Colony of New South Wales, at Government House, Sydney, in New South Wales, this twenty-fifth day of August, in the year of our Lord one thousand eight hundred and eighty.

[L.S.] AUGUSTUS LOFTUS.

Improvements in Apparatus for Husking and Cleaning Rice, &c.

A.

SPECIFICATION of JOHN FISHER, of London, in the County of Middlesex, England, for an invention entitled "Improvements in Apparatus for Husking and Cleaning Rice or other Grain, and for Pulverizing and Mixing Mortar, Cement, or other materials."

THIS invention relates firstly to apparatus used for the purpose of husking or cleaning rice or other grain, in which it is required that the rice should be agitated and rubbed in order to remove the husks and to polish the grain, but not that it should be pulverized or broken. It has for its objects improved methods of constructing, arranging, and actuating the apparatus, so that it is more rapid and effective in its operation than apparatus for such purpose as heretofore used.

In order that the objects of my invention should be successfully accomplished, it is necessary that certain considerations should be observed. Thus, it is important that the operation of removing the husks from the rice or grain should be accomplished rapidly, in order that a large quantity should be treated in a given time, as otherwise the cost of applying machinery to the purpose would render such application impracticable.

Secondly, the removal of the husk must be complete; and as it is of a very tough and adherent nature, this necessitates the use of considerable and continuous friction, not only of the rice or "paddy" against the parts of the apparatus, but also of the individual grains themselves.

Again, after the husk has been removed from the grain, as in the case of rice or coffee, it is necessary, in order that the result may be perfect, that the separate grains should be rubbed and polished together, in order to impart to them a brilliancy of surface without which they cannot command the highest price in the markets; and, finally, that the percentage of breakage of the grain during the operation should not be too great.

In order, therefore, to render the application of machinery effective for the purposes described, it is necessary that the apparatus by the friction of which the husks are removed should work with great rapidity and with considerable friction against the grain, that it should not pound or triturate the latter so as to cause its breakage, and that the grain should be kept in constant motion, so that a fresh part of its bulk is continually submitted to the action of the cleansing apparatus, whilst its separate component units are constantly in frictional contact with each other.

On the other hand, where hard substances, such as auriferous quartz or other mineral ores, are to be triturated or reduced to a fine powder, it is necessary that whilst the action of the remainder of the apparatus continues the same, that of the rapidly working cleansing devices should have a stamping or pounding action upon the material.

Taking first the novel apparatus as applied to the husking and cleaning of rice, coffee, or other grain, I take a bowl or dish-shaped vessel of any suitable material, preferably cast-iron, and of sufficient size, circular in plan, and having its sides sufficiently high to contain the required quantity of rice or other substance. This vessel is arranged so that it can revolve upon a suitable central axis below it, which is arranged in a position inclined from the perpendicular, so that when the vessel is made to revolve the rice which it contains falls over continually to the lower side.

Above the vessel so arranged I fit a vertical spindle capable of rising and falling for a sufficient distance in suitable guides, and in such a position that its lower end enters the rice or grain, which collects as already described at the lower part of the vessel.

To the lower end of the spindle operating as described I fit or fix a ball or block, oval, cylindrical, or of other suitable shape, of metal, wood, or other suitable material, which is thus caused to work rapidly up and down in the rice or grain, whilst the vessel is at the same time made to rotate upon its inclined axis.

The upper end of the spindle is connected to a piston-rod having a piston working in a vertical cylinder of suitable size arranged above.

I make this cylinder so that the piston can be made to vibrate up and down with great rapidity by the pressure of steam, compressed air, or other elastic fluid admitted to it either by means of a valve actuated by the piston in any of the ordinary methods well understood and practised, or by means of ports or passages in the cylinder and piston without a valve.

In the accompanying drawings figure 1 is a front view, and figure 2 a vertical section of a machine constructed and arranged in the way described. *a* is the inclined vessel, revolving in the bearing *b*, and supported by the roller *c*.

The frame *d* carries the cylinder *e*, the piston-rod of which *f* has attached to its lower end the ball or block *g*, which dips into the rice or grain in the vessel *a*. The vessel *a* is shown made to rotate by a ratchet wheel actuated by means of the piston by a pawl and levers, and driving the bevelled toothed wheels *l*. An elastic stop or buffer is shown at *m* to prevent the block *g* from descending too low.

The action of the apparatus is as follows:—The vessel *a* being filled with a sufficient quantity of rice or other grain, and the piston with the vertical spindle *f* and ball or block *g* being set in motion by steam or other convenient driving fluid, the vertical spindle *f* with the ball or block *g* rises and falls with great rapidity through the rice or grain, and cleanses and polishes it by its friction, whilst at the same time as the vessel *a* rotates the rice is turned over continually and a fresh part of its bulk subjected to the friction. When it has in this way become sufficiently cleaned and polished, I remove it from the vessel, either by lifting it over the lower edge of the latter, or through a movable door in the lower part of the vessel as shown at *n*.

A fresh charge of rice or grain is then introduced, and the process is repeated.

As the ball or block *g* does not touch the vessel *a*, the rice or grain is not broken. I prefer to line the interior of the vessel with a rough cement such as emery, sand, glass, or other abrasive powder, mixed with plaster, glue, or other suitable material, and the ball or block *g* may also be coated with a similar composition; and in this way the friction against the rice or grain is made more effective.

Or, instead of the composition described, a soft material such as sheepskin may be usd for polishing. The vessel may be closed with a movable cover, and I prefer to arrange above the edge of the vessel a screen

screen of perforated metal or wire gauze, cylindrical or of other convenient shape, which revolves with the vessel, and through which the dust and meal separated from the rice or grain is discharged.

Instead of the ball or block as described and shown at the lower end of the spindle, any other convenient form of appliance may be used by which the mixing and rubbing and polishing of the grain can be effected.

For instance, the device may consist of two or more vertical straight or curved arms, arranged cylindrically, spherically, or in any other convenient form.

Any number of the machines may be arranged in line or otherwise, and actuated simultaneously or separately.

Where it is desired that the process described shall be continuous, I sometimes supply the rice or grain or other material to the vessel in the following manner:—I arrange a vertical partition attached to any suitable fixed support across the revolving vessel, and near the vertical spindle with its attachment.

This partition fits the interior of the vessel as closely as convenient, and on one side of it next to the higher part of the vessel I introduce the rice or grain, and at the centre of its lower edge I make a small opening, through which the rice or grain can pass into the other division of the vessel under the moving vertical spindle.

The rice or grain, when sufficiently cleaned and polished, is discharged over the lower edge of the revolving vessel, whilst a fresh supply enters through the opening in the partition (which is preferably provided with an adjustable door or valve).

The rice or grain may be fed into the higher side of the revolving vessel through a pipe provided with an adjustable regulating valve.

I prefer to coat the sides of the partition with an abrasive composition similar to that already described; or, instead of the partition described, I sometimes introduce the rice or grain into the vessel through a fixed pipe, the lower end of which opens below the vertical spindle; or it may be introduced through the central spindle or axis of the vessel, which is made hollow for the purpose.

I prefer that the piston carrying the spindle, with its polishing appliance, should be made to revolve upon its axis at each stroke by means of a movable helically twisted bar entering a corresponding nut in the upper end of the piston, or in other convenient way.

By this means the rubbing action upon the rice or grain is increased.

The cylinder may be made capable of being raised or lowered vertically in guides, its position being regulated by hand by a lever, or a screw and nut.

In apparatus of the kind last described the vessel may be made to revolve by means of a separate steam-engine or other convenient power, or by means of an endless screw and worm wheel, or bevelled toothed wheels, actuated by a ratchet wheel and pawl connected to the piston-rod, or by an endless chain or belt actuated in a similar way.

Instead of connecting the vertical bar rigidly to the ball or block or other appliance described, I sometimes connect them with the interposition of india-rubber, leather, or other elastic material.

The apparatus may be constructed and arranged so that two or more vertical bars, with their appliances as described, work in the revolving vessel at the same time; and instead of a cylinder and piston actuated as described, the upper part of the vertical spindle described may be connected by a connecting link or other equivalent means to a crank or eccentric upon a horizontal shaft revolving rapidly in bearings; so that when the shaft is set in revolution the lower end of the spindle is made to rise and fall at any desired speed in the rice or grain.

Figure 3 is an illustration of a smaller apparatus to be worked by manual power. *a* is the vessel revolving upon the inclined axis *b*. The lever *c* vibrates upon the support *d*, and carries upon its outer end the beater *e* of metal, stone, or other suitable material, by the rise and fall of which the rice or other material in the vessel *a* is treated as desired.

The vessel *a* is made to revolve by means of the ratchet wheel pall, and levers and rods *f* connected to the lever *c*, and driving the roller *g* which supports the vessel *a* (which roller may be provided with teeth).

Where the apparatus is to be used for cutting or chopping substances such as meat, instead of triturating and polishing, the vessel may be of wood or lined with wood, and chopping-knives or other instruments adapted to the purpose desired may be attached to the lower end of the vertical spindle, the length of which is so proportioned that the blades strike the vessel at each blow.

Where my improved machinery or apparatus is to be used for crushing and pulverizing hard materials such as quartz, I make a revolving vessel of sufficient strength, and I sometimes arrange within it movable adjustable anvil plates or blocks of iron or steel, which can readily be replaced when worn away.

The revolving vessel in such cases may be supplied with mercury and with water continuously or at intervals, the material being discharged when sufficiently pulverized, either by being thrown or flashed over the edge of the vessel, or by being dashed through wire gauze or perforated plates of suitable material arranged above the revolving vessel as already described.

Figure 4 shows a section of a machine arranged in the way and for the purpose described. *a* is the revolving vessel supported in the inclined bearing *b*. The cylinder *c* is carried on the frame *d*, and its piston-rod *e* passes through the guide *f*, and has attached to its lower end the stamp or triturating device *g*.

The piston-rod *e*, with its attachments, is made to rotate at each stroke (as indicated by the ratchet wheel *h*), and is shown fitted with an india-rubber stop or buffer *i*, by which it is prevented from descending too low. The levers, ratchet wheel and pawl, and tangent toothed wheel and screw *k*, by which the vessel *a* is made to revolve, are shown actuated by collars upon the piston-rod *e* at *b*.

The part of the bottom *c* upon which the hammer or stamp-head strikes is made very strong. The centre inclined bearing *b* is shown hollow, and with an adjustable pipe *m*, in order that the triturated quartz or other material may be discharged through it, together with the water which overflows from the vessel.

In such case I prefer to make the side of the vessel solid, as shown broken off at *n*, or it may be provided with wire gauze, through which the powdered material is dashed, as shown at *o*.

Sometimes

Improvements in Apparatus for Husking and Cleaning Rice, &c.

Sometimes I arrange one or more fixed brushes or cleansing appliances, which clean the revolving wire gauze or plates as the latter pass round and press against them.

In the different arrangements of apparatus described, the rising and falling spindle may be in an inclined position instead of vertical.

The revolving vessel may be lined, and the cleaning appliance covered with leather or other material, such as india-rubber, kamptulicon, or wood, to suit the different circumstances to which it is to be applied.

I prefer to arrange the revolving vessel and the cleaning appliances, or stamp-heads and hammers, so that they can readily be removed and others substituted for them.

My apparatus may be arranged so that two or more revolving vessels are used, the material treated being partly operated upon in the first vessel, whence it passes to the next, and so on until the operations are finally completed. The quartz or other material may be fed as required into the revolving vessel by hand, or by means of an endless chain of buckets actuated by the machine itself or by other power. Or sometimes I arrange a hopper, which is kept supplied with the quartz or other material, reduced to pieces of a suitable size, and having an adjustable opening or regulator below. Under this opening I arrange a horizontal endless belt, of metal links or other suitable material, passing round rollers and made to travel forward at any desired speed, so that the quartz or other material which falls upon it from the hopper is conveyed to any convenient point, where it is delivered into the revolving vessel.

Having now described my invention and the manner in which it is to be performed, I claim—

First—The vessel revolving on an inclined axis, in combination with a vertical bar rising and falling above the lower part of the vessel, and having its lower end provided with a device for husking and cleaning rice or other grain by friction, substantially as described and shown.

Second—The application of a piston actuated in a cylinder by means of steam or compressed air, for the purpose of operating such vertical bar and cleaning device, substantially as described and shown.

Third—The methods of causing the vertical bar and cleansing device described to rotate in the rice or grain at each stroke.

Fourth—The combination of the vessel revolving upon an inclined axis, with a beating and cleaning device attached to the end of a vibrating lever actuated by manual labour, for the purpose of husking and cleaning rice and grain, or pulverizing hard substances, substantially as described and shown.

Fifth—The method of causing the vessel to revolve upon the inclined axis whilst the rice or grain is being operated on, substantially as described and shown.

Sixth—The combination of a vessel revolving upon an inclined axis with one or more hammers or stamp-heads, actuated directly by steam or compressed air, for the purpose of pulverizing quartz or other mineral substances, or breaking and mixing cement, mortar, or other materials, substantially as described and shown.

Seventh—The method of applying circular screws of gauze or perforated plates to the revolving inclined vessels, substantially as and for the several purposes described and shown.

Eighth—The combination with the inclined vessel of a hollow adjustable spindle, upon which it revolves, and through which quartz or other material is discharged when sufficiently pulverized.

In witness whereof I, the said John Fisher, have hereunto set my hand and seal, this nineteenth day of March, one thousand eight hundred and eighty.

JOHN FISHER.

Witness—

EDMUND EDWARDS.

This is the specification, marked A, referred to in the annexed Letters of Registration granted to John Fisher, this twenty-fifth day of August, A.D. 1880.

AUGUSTUS LOFTUS.

REPORT.

Sir, Sydney, 28 July, 1880.

We do ourselves the honor to state that we find no objection to the issue of Letters of Registration in favour of Mr. John Fisher, for an invention, "Improvement in Apparatus for Husking and Cleaning Rice or other Grain, and for Pulverizing and Mixing Mortar, Cement, or other material," in accordance with Mr. Fisher's Petition, specification, drawings, and claim, transmitted for our report under your blank cover communication of the 19th instant, No. 5,859.

We have, &c.,

GOTHER K. MANN.

The Principal Under Secretary. ROBERT GEO. MASSIE.

[Drawings—three sheets.]

Fig: 1.

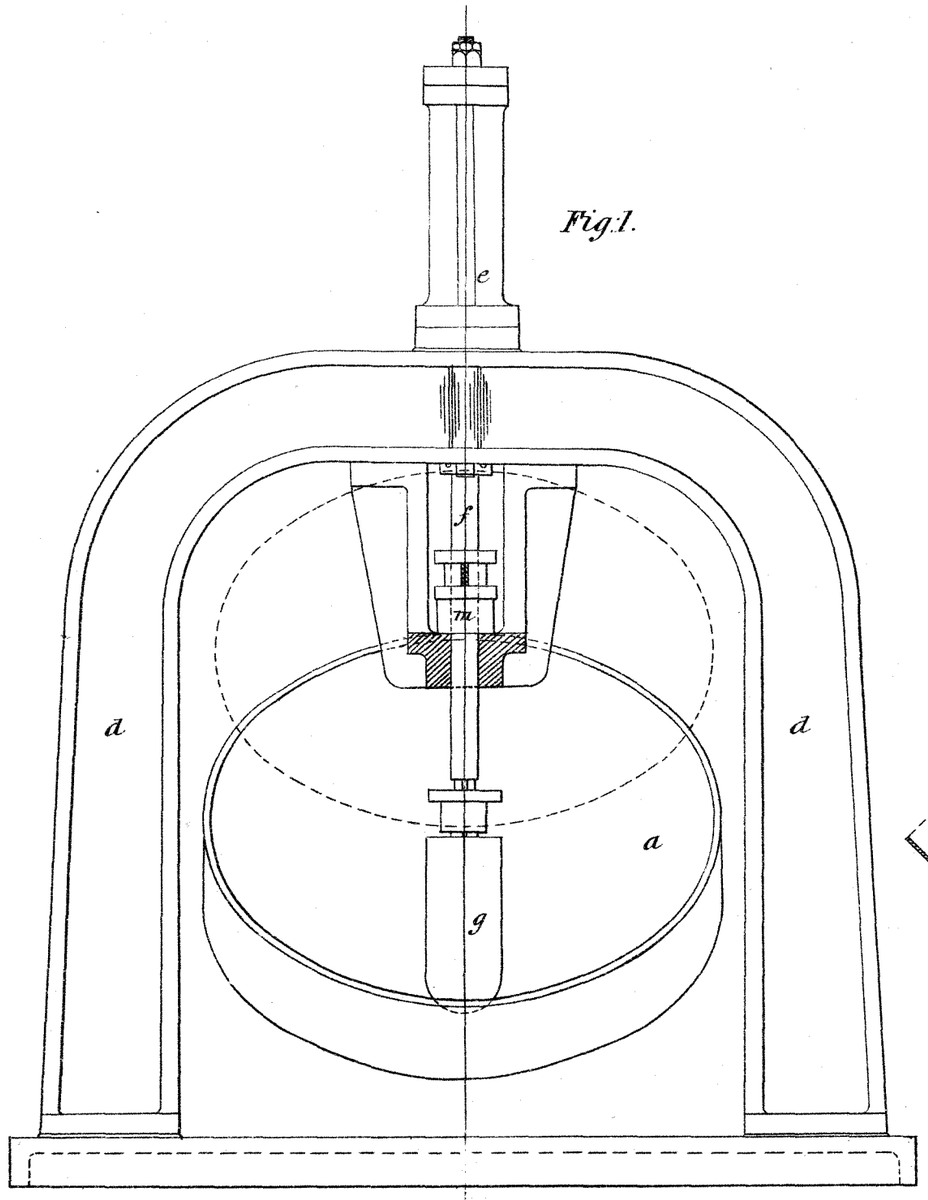

Fig: 2.

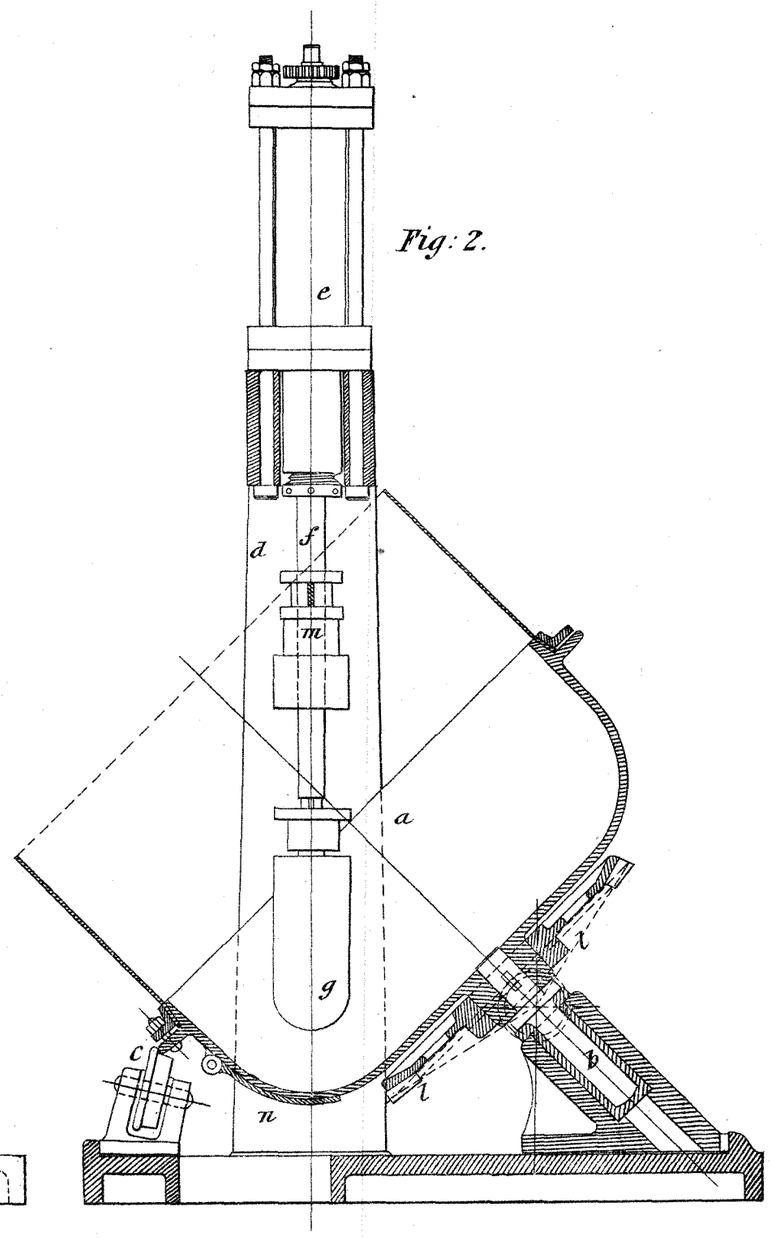

This is the Sheet of Drawings marked B referred to in the annexed Letters of Registration granted to John Fisher, this twenty fifth day of August A.D. 1880,

Augustus Loftus.

Sig: 357.

PHOTO-LITHOGRAPHED AT THE GOVT. PRINTING OFFICE, SYDNEY, NEW SOUTH WALES.

Fig. 3.

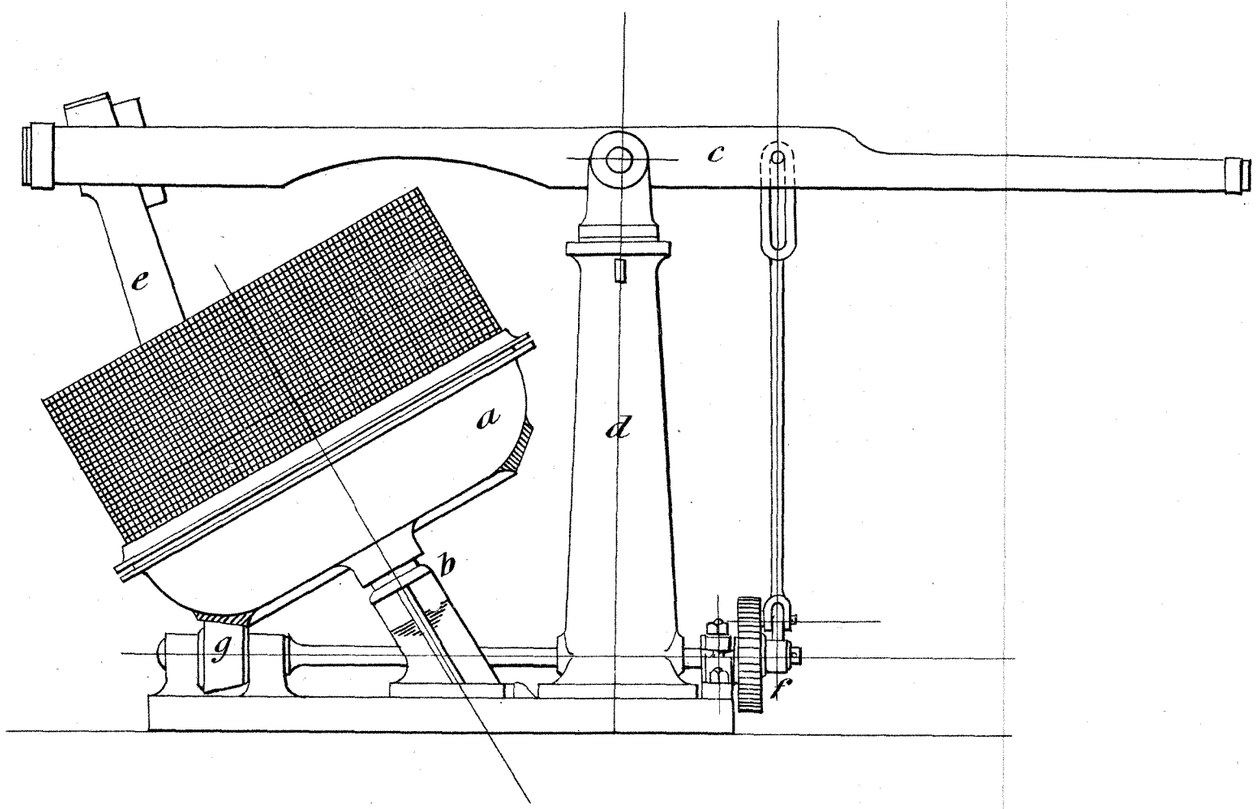

This is the Sheet of Drawings marked C. referred to in the annexed Letters of Registration granted to John Fisher, this twenty fifth day of August A.D. 1880.

Augustus Loftus.

Sig. 357.

PHOTO-LITHOGRAPHED AT THE GOVT. PRINTING OFFICE,
SYDNEY, NEW SOUTH WALES.

Fig: 4.

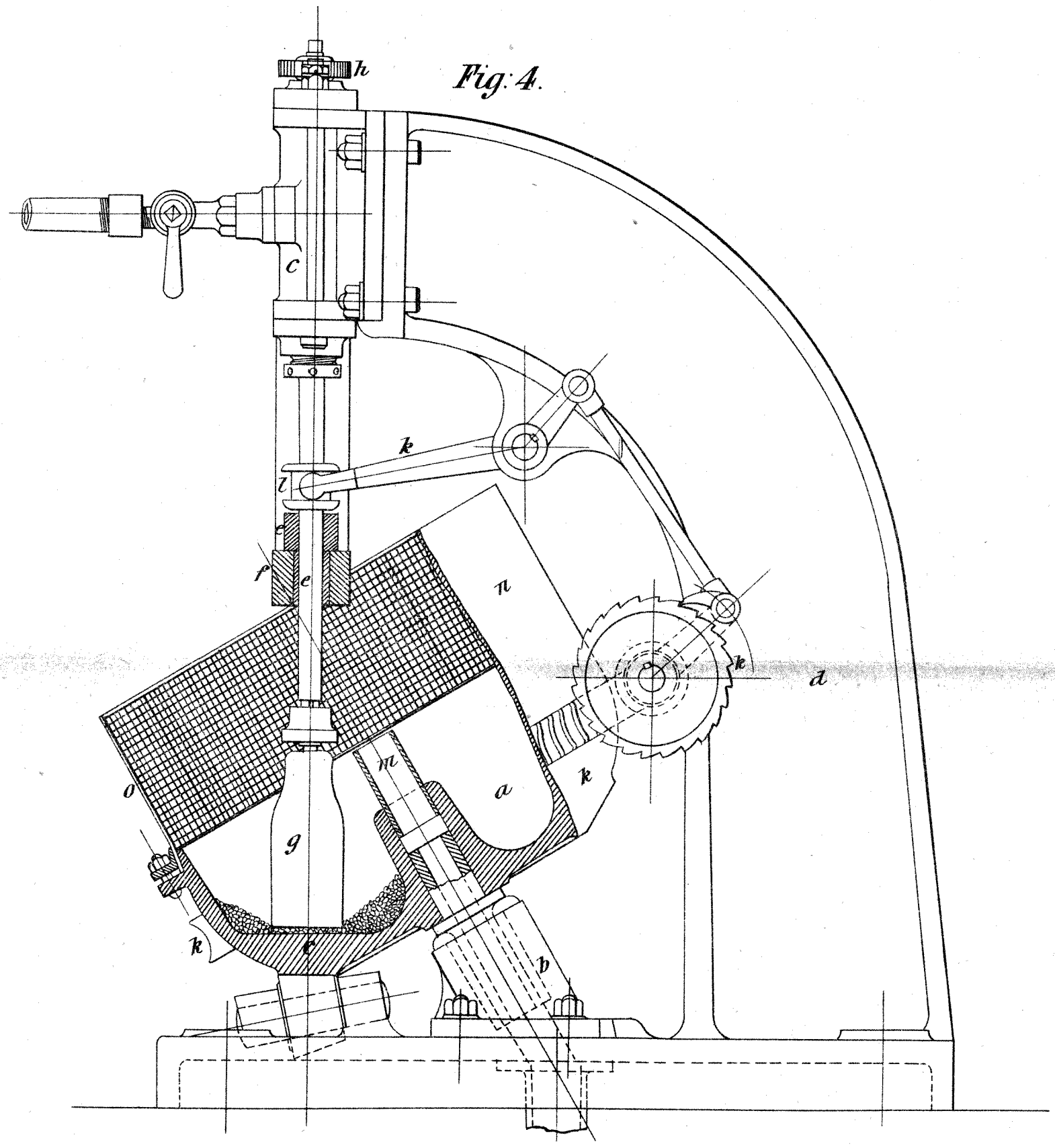

This is the Sheet of Drawings marked D. referred to in the annexed Letters of Registration granted to John Fisher, this twenty fifth day of August A.D. 1880.

Augustus Loftus.

PHOTO-LITHOGRAPHED AT THE GOV^T. PRINTING OFFICE, SYDNEY, NEW SOUTH WALES.

A.D. 1880, 25*th August.* No. 868.

APPARATUS FOR THE PRODUCTION OF AN ILLUMINATING AND HEATING GAS.

LETTERS OF REGISTRATION to Arthur Isaac Maxfield and Frederick Styman, for an Apparatus for the production of an illuminating and heating Gas from light hydro-carbon spirits or other like materials.

[Registered on the 26th day of August, 1880, in pursuance of the Act 16 Vic. No. 24.]

BY HIS EXCELLENCY THE RIGHT HONORABLE SIR AUGUSTUS WILLIAM FREDERICK SPENCER LOFTUS (commonly called LORD AUGUSTUS LOFTUS), Knight Grand Cross of the Most Honorable Order of the Bath, a Member of Her Majesty's Most Honorable Privy Council, Governor and Commander-in-Chief of the Colony of New South Wales and its Dependencies.

TO ALL TO WHOM THESE PRESENTS SHALL COME, greeting:

WHEREAS ARTHUR ISAAC MAXFIELD and FREDERICK STYMAN, both of Morpeth, in the Colony of New South Wales, machinists, have by their Petition humbly represented to me that they are the authors or designers of a certain invention or improvement in manufactures, that is to say, of an invention of an "Apparatus for the production of an illuminating and heating Gas from light hydro-carbon spirits or other like materials," which is more particularly described in the amended specification and the sheet of drawings which are hereunto annexed; and that they, the said Petitioners, have deposited with the Honorable the Treasurer of the said Colony of New South Wales the sum of Twenty Pounds sterling, for defraying the expense of granting these Letters of Registration, as required by the Act of Council, sixteenth Victoria, number twenty-four; and have humbly prayed that I would be pleased to grant Letters of Registration, whereby the exclusive enjoyment and advantage of the said invention or improvement might be secured to them for a period of fourteen years: And I, being willing to give encouragement to all inventions and improvements in the arts or manufactures which may be for the public good, and having received a report favourable to the prayer of the said Petition, from competent persons appointed by me to examine and consider the matters stated therein and to report thereon for my information, am pleased, with the advice of the Executive Council, and in exercise of the power and authority given to me by the said of Act of Council, to grant, and do by these Letters of Registration grant unto the said Arthur Isaac Maxfield and Frederick Styman, their executors, administrators, and assigns, the exclusive enjoyment and advantage of the said invention or improvement, for and during the term of fourteen years from the date hereof; to have, hold, and exercise unto the said Arthur Isaac Maxfield and Frederick Styman, their executors, administrators, and assigns, the exclusive enjoyment and advantage thereof, for and during and unto the full end and term of fourteen years from the date of these presents next and immediately ensuing, and fully to be complete and ended: Provided always, that if the said Arthur Isaac Maxfield and Frederick Styman shall not, within three days after the granting of these Letters of Registration, register the same in the proper office in the Supreme Court, at Sydney, in the said Colony of New South Wales, then these Letters of Registration, and all advantages whatsoever hereby granted, shall cease and become void.

In witness whereof, I have hereunto set my sign manual, and have caused the present Letters of Registration to be sealed with the seal of the said Colony of New South Wales, at Government House, Sydney, in New South Wales, this twenty-fifth day of August, in the year of our Lord one thousand eight hundred and eighty.

[L.S.] AUGUSTUS LOFTUS.

A.D. 1880. No. 868.

Apparatus for the production of an illuminating and heating Gas.

SPECIFICATION.

TO ALL TO WHOM THESE PRESENTS SHALL COME: We, ARTHUR ISAAC MAXFIELD and FREDERICK STYMAN, both of Morpeth, in the Colony of New South Wales, send greeting:

WHEREAS we are desirous of obtaining Letters Patent for securing unto us Her Majesty's special license that we, our executors, administrators, and assigns, or such others as we or they should or may at any time agree with, and no others, should and lawfully might, from time to time, and at all times during the term of fourteen years, to be computed from the day on which this instrument is left at the office of the Colonial Secretary, at Sydney, make, use, exercise, and vend, within the Colony of New South Wales, an invention or discovery, being an apparatus for the production of an illuminating and heating gas from light hydro-carbon spirits or other like materials which give off an inflammable vapour at all ordinary temperatures; and in order to obtain the said Letters Patent we must, by an instrument in writing under our hand and seals, particularly describe and ascertain the nature of the said invention and by what means the same is to be performed: to be particularly described and ascertained in and by the following statement, that is to say:—

The object of our invention is to provide an automatic apparatus or machine for the production or manufacture of an illuminating gas from light hydro-carbons, such gas being already known as "atmospheric air gas."

Gas for illuminating and heating purposes is produced by forcing atmospheric air over and through light hydro-carbons or other like materials, which give off an inflammable vapour at all ordinary temperatures. One method we use for producing such gas is as follows:—

We make an outer box or case of zinc or other metal, within which box or case at one end or side we place another box or case (called the drum chamber hereafter); within the said drum chamber we place or fix a revolving drum working in water or directly in the hydro-carbon spirits (when the drum chamber could be entirely or partly removed). From this drum chamber we connect a pipe or tube of a suitable shape; such pipe or tube is carried out through the top or side into the first or outer case (which case contains a small vessel or recess constructed of perforated metal). From the same case or drum chamber we carry another pipe or tube which opens out to the atmosphere, and called the inlet pipe. By these means the air enters at the inlet pipe, thence enters lips of drum, which drum revolving forces the air through the first pipe under pressure; the air then passes from the said tube into the said vessel or recess, and out through the perforations in the said vessels; the air is then charged with inflammable vapour from the hydro-carbon spirits contained in the first or outer case; the charged air then passes through an opening into a small gasometer or regulator placed on the top of the said outer case, and out through another pipe to fittings, &c., of premises, and is then fit for use. Also, within the first or outer case we provide means to keep the said hydro-carbon spirits in a continual agitated state and of a uniform density, and at the same time to keep the material contained in the perforated vessel in a continual moist state (the said vessel contains some porous material of a suitable description). For this purpose we have provided two chain wheels of a peculiar construction, under and over which chain wheels we pass an endless chain, and upon the said chain we place or fix a number of small vessels or buckets. The said chain and chain wheels are driven by multiplying wheels fixed on the drum-shaft or other means. Or we use instead of the chain and chain wheel a large drum or wheel connected in a similar manner; the face of the said wheel or drum contains small vessels or buckets; splashers or beaters could be applied with the same results. The whole to be driven by a suitable cord or rope wound upon a spool, which spool has a ratchet wheel at one end, the said spool to be connected to drum-shaft or to the axle of multiplying wheels. The ratchet on spool allows the rope or cord being wound upon it without turning the machinery in a contrary direction from which it works when in use; the cord or rope is then passed over and through a set of sheaves or pulley blocks, to the lower of which blocks is attached a weight sufficient to drive the whole; the cord passing through the sheaves or blocks (which blocks may contain four or more sheaves each) and the spool being connected to multiplying wheels upon the drum-shaft or otherwise, allows the machine to be driven any length of time without having to carry the sheaves or blocks to an unsuitable height; clockwork or other motive powers could be used with the same results, but we prefer the sheaves or blocks, as being more effective and less liable to get out of order.

Another means or method we have adopted is as follows:—We make an outer case of zinc or other suitable metal, within which case we place a spiral drum or system of tubes running the entire length of the said case; at one or both ends of the said drum or tubes we place a plate or disc of metal, which disc has an annular opening, through which opening we connect a tube; this tube opens out to the atmosphere. The said spiral drum or or system of tubes upon revolving, draws in the atmospheric air (and the whole working directly in the hydro-carbon spirits) and discharges the said air at the other end of drum, to all intents and purposes an illuminating agent. We use a small gasometer or regulator with this form of machine, the same as with the other method before described, and driven in the same or similar.

Also an arrangement by which our invention may be applied for illuminating railway or other carriages, the drawings of which will more particularly describe the manner of using the said inventions for this and other purposes.

Having thus described our inventions and the means we have adopted in carrying the same into effect, we would have it understood that we do not confine ourselves to the precise details herein described, as they may be varied without departing from the peculiar character of these inventions, but what we do claim is—

First—The manufacture or production of what is known as atmospheric air gas, by the "means adopted and described" in this our specification, for forcing atmospheric air over and through light hydro-carbons, and for keeping the said hydro-carbons in a continual agitated state during the process of forcing the said air over and through the said hydro-carbons; and

Secondly—The arrangement to be used for the automatic production of an illuminating gas for the use of railway or other carriages.

DESCRIPTION

Apparatus for the production of an illuminating and heating Gas.

DESCRIPTION OF DRAWINGS.

Fig. 1 is a section of our first invention, showing chain lift arrangement; 1, inlet for air; 2, revolving drum; 3, pipe for carrying air into spirit chamber, which air then passes along pipe 4 into small recess 5 contained in perforated vessel J; thence over plate or plates G, through valve M into gas-holder L, through pipe 6 to fittings of premises; N, rod to keep gas-holder straight; H, spout for carrying spirit into vessel J; A, spool; B, ratchet on spool; O, pawl to ratchet shown in fig. 8; C C and D D, multiplying wheels; E E, chain wheels; F F, chain and buckets shown in figs. 9 and 10; K, spirit line; W, water line; P, handle for winding cord on spool A: 7, pipe for diluting gas with air; R, regulator or gasometer. The above numbers and letters apply to the same parts in figs. 1, 2, 3, 4, 5, 6, 7, 8, 9, and 10. Fig 2, end view of fig. 1; fig. 3, end view showing lips of drum, A′ A′ and B′ B′; fig. 4, section showing wheel lift on drum shaft; fig. 5, wheel lift showing buckets F F, &c.; fig. 6, side section showing wheel lift driven by multiplying wheels; fig. 7, end view of fig. 6, showing box (with front removed), which contains multiplying wheels; fig. 8, end view of spool; fig. 9, side view of chain; fig. 10, front view of chain; fig. 11, spiral drum arrangement; A, inlet for air into worm or tubes C; D D D D, lips of worm or tubes; B B, outlets for air or gas; fig. 12, end view of spiral drum; fig. 13, railway carriage illuminator; A, gas-holder; B, lever attached to top of gas-holder; the other end of said lever has a flanged pulley, C, over which we pass an endless cord or chain, which cord or chain is passed once round pulley D attached to gas machine, then down through carriage, round axle of carriage E. When gas escapes from gas-hold by use, the top of gas-holder falling pulls down lever B, which then tightens cord or chain F, and thus sets machine in motion; when gas-holder is full, a contrary action slackens cord and thus stops machine. G, pipe from machine to gas-holder; H, pipe to other carriages. The gas-holder is first filled by hand before the train is made up, and will then act automatically during the journey.

In witness whereof, we, the said Arthur Isaac Maxfield and Frederick Styman, have hereunto set our hands and seals, this twenty-third day of April, in the year of our Lord one thousand eight hundred and eighty.

ARTHUR ISAAC MAXFIELD.
FREDERICK STYMAN.

This is the amended specification referred to in the annexed Letters of Registration granted to Arthur Isaac Maxfield and Frederick Styman, this twenty-fifth day of August, A.D. 1880.

AUGUSTUS LOFTUS.

REPORTS.

Sir, Sydney, 8 June, 1880.

The application of Messrs. A. I. Maxfield and F. Styman for Letters of Registration for a "Machine for the production of an illuminating and heating Gas, also an improved Sun-light Burner" having been referred to us, we have examined the specification and drawings accompanying the same, and have now the honor to report thereon as follows:—

The first claim is for an apparatus for producing an illuminating gas by forcing atmospheric air through a volatile hydro-carbon. The wording of the claim is somewhat ambiguous, and might be held to include the production of an illuminating gas by impregnating atmospheric air with hydro-carbon vapour, apart from the particular apparatus described. Such a claim could not be allowed, but we see no objection to the registration of the apparatus as described and figured for the production of such gas.

The second claim is for a burner formed simply by perforations in a tube. We fail to see any novelty in this, and cannot therefore pass this claim.

The third claim is for an "arrangement to be used for the automatic production of an illuminating gas for the use of railway and other carriages," and to this we see no objection.

We therefore recommend that the specification be returned to the applicants, with the view of having the first claim amended so as to remove the ambiguity above indicated, and of having the second claim expunged.

We have, &c.,
J. SMITH.
CHAS. WATT.

The Principal Under Secretary.

MEMO:—With the amended specification now submitted we see no objection to the issue of Letters of Registration.

J. SMITH.
CHAS. WATT.

24 July, 1880.

[Drawings—one sheet.]

MAXFIELD & STYMAN'S.

PATENT.

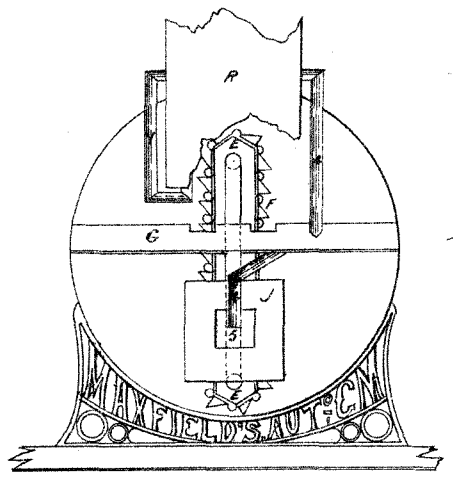

Fig. 2.

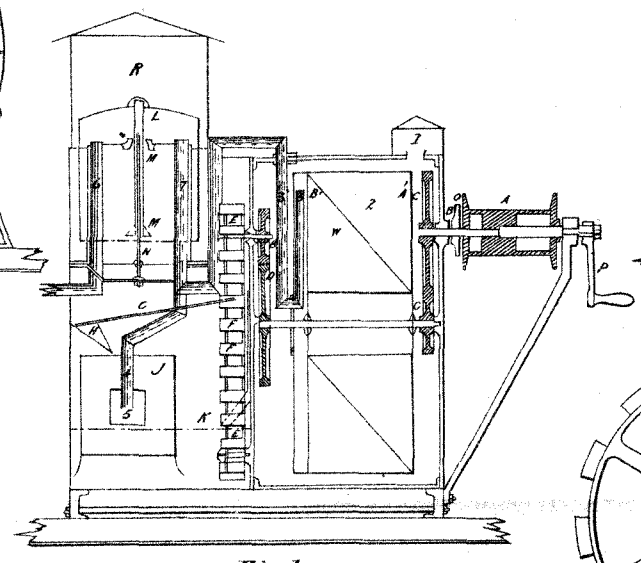

Fig. 1.

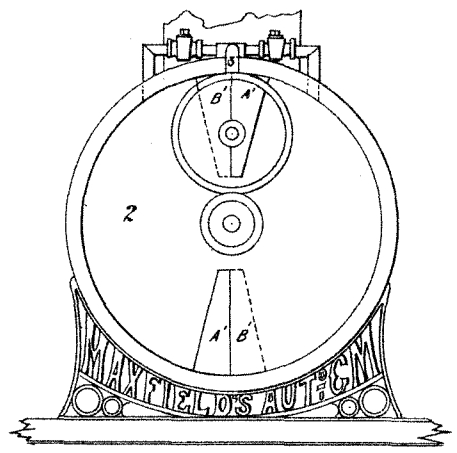

Fig. 3.

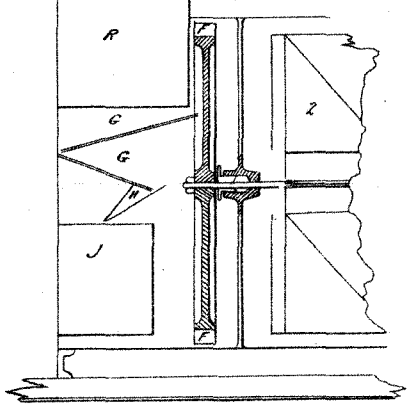

Fig 4.

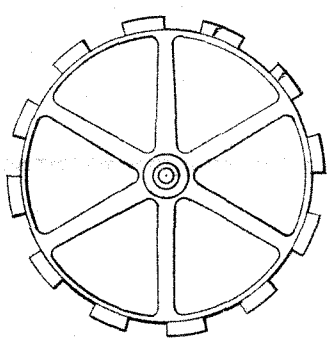

Fig. 5.

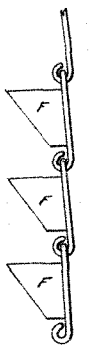

Fig. 9.

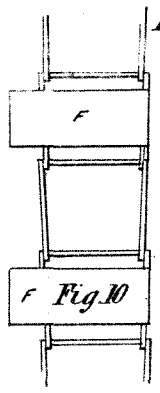

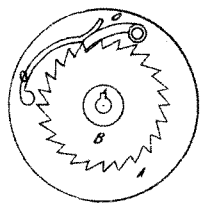

Fig. 8.

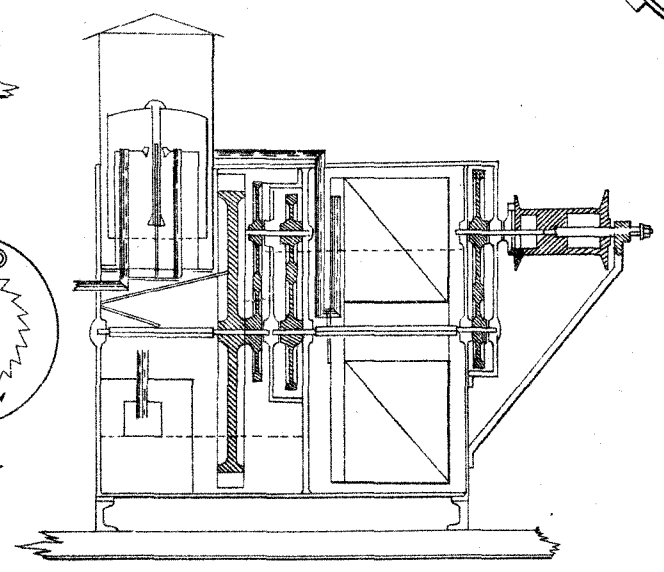

Fig. 6.

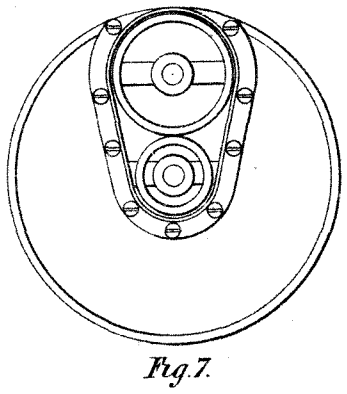

Fig. 7.

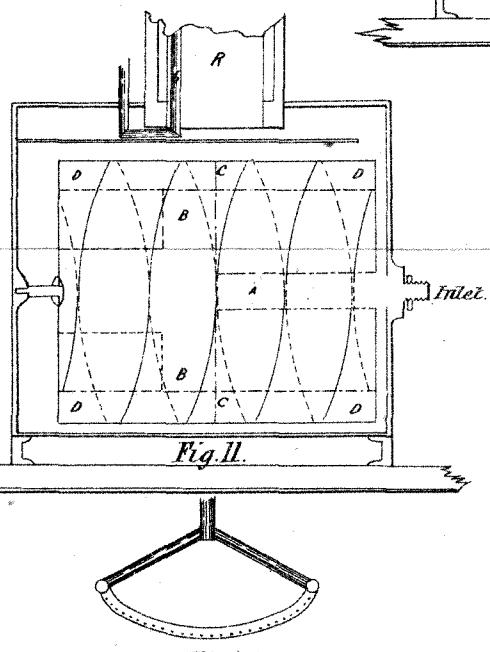

Fig. 11.

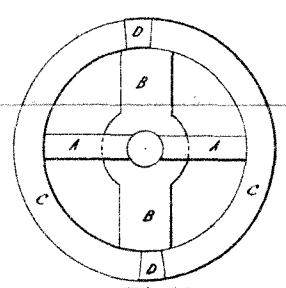

Fig. 12

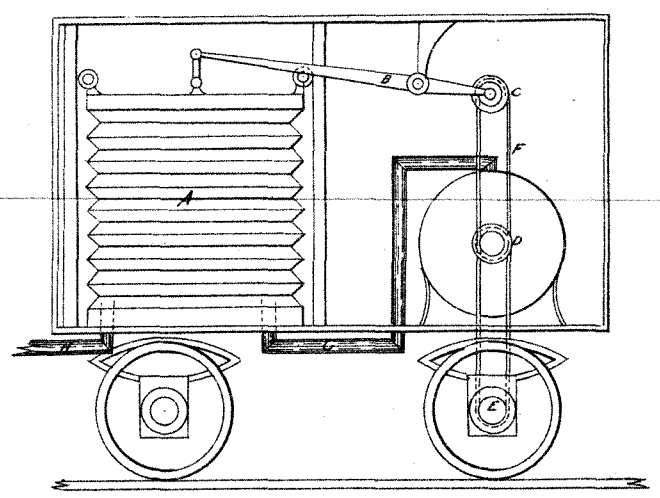

Fig. 13.

Fig. 14.

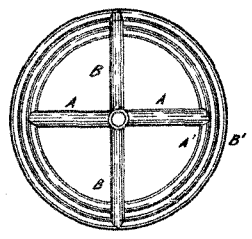

Fig. 15.

This is the Sheet of Drawings referred to in the annexed Letters of Registration granted to Arthur Isaac Maxfield, and Frederick Styman, this twenty fifth day of August A.D 1880.

Augustus Loftus.

Arthur Isaac Maxfield.
Frederick Styman.

Sig 357.

PHOTO-LITHOGRAPHED AT THE GOVT. PRINTING OFFICE, SYDNEY, NEW SOUTH WALES.

A.D. 1880, 25*th August*. No. 869.

O'NEILL'S PATENT CAITHNESS CONCRETE FLAGGING.

LETTERS OF REGISTRATION to Charles O'Neill, for O'Neill's Patent Caithness Concrete Flagging.

[Registered on the 26th day of August, 1880, in pursuance of the Act 16 Vic. No. 24.]

BY His Excellency the Right Honorable Sir Augustus William Frederick Spencer Loftus (commonly called Lord Augustus Loftus), Knight Grand Cross of the Most Honorable Order of the Bath, a Member of Her Majesty's Most Honorable Privy Council, Governor and Commander-in-Chief of the Colony of New South Wales and its Dependencies.

TO ALL TO WHOM THESE PRESENTS SHALL COME, greeting :

WHEREAS Charles O'Neill, of Wellington, in the Colony of New Zealand, civil engineer and architect, hath by his Petition humbly represented to me that he is the author or designer of a certain invention or improvement in manufactures, that is to say, of an invention to be designated "O'Neill's Patent Caithness Concrete Flagging," which is more particularly described in the specification which is hereunto annexed; and that he, the said Petitioner, hath deposited with the Honorable the Treasurer of the said Colony of New South Wales the sum of Twenty Pounds sterling, for defraying the expense of granting these Letters of Registration, as required by the Act of Council, sixteenth Victoria, number twenty-four; and hath humbly prayed that I would be pleased to grant Letters of Registration, whereby the exclusive enjoyment and advantage of the said invention or improvement might be secured to him for a period of fourteen years: And I, being willing to give encouragement to all inventions and improvements in the arts or manufactures which may be for the public good, and having received a report favourable to the prayer of the said Petition, from competent persons appointed by me to examine and consider the matters stated therein and to report thereon for my information, am pleased, with the advice of the Executive Council, and in exercise of the power and authority given to me by the said Act of Council, to grant, and do by these Letters of Registration grant unto the said Charles O'Neill, his executors, administrators, and assigns, the exclusive enjoyment and advantage of the said invention or improvement, for and during the term of fourteen years from the date hereof; to have, hold, and exercise unto the said Charles O'Neill, his executors, administrators, and assigns, the exclusive enjoyment and advantage thereof, for and during and unto the full end and term of fourteen years from the date of these presents next and immediately ensuing, and fully to be complete and ended: Provided always, that if the said Charles O'Neill shall not, within three days after the granting of these Letters of Registration, register the same in the proper office in the Supreme Court, at Sydney, in the said Colony of New South Wales, then these Letters of Registration, and all advantages whatsoever hereby granted, shall cease and become void.

In witness whereof, I have hereunto set my sign manual, and have caused the present Letters of Registration to be sealed with the seal of the said Colony of New South Wales, at Government House, Sydney, in New South Wales, this twenty-fifth day of August, in the year of our Lord one thousand eight hundred and eighty.

[L.S.] AUGUSTUS LOFTUS.

O'Neill's Patent Caithness Concrete Flagging.

SPECIFICATION.—Patent Caithness Concrete Flagging.

THIS invention has for its object the manufacture of flagging for paving footpaths, railway and tramway stations, sheds, &c., kitchens, vestibules, verandahs, &c., and generally for any purposes to which natural flagstones or slabs may be applied, and for carrying projections and cornices of buildings, &c., blocks for kerbing and guttering, and sets for roadways, entrances, crossings, &c., representing as nearly as possible the famous Caithness flagging, or pavements of London and Glasgow, and the granite blocks for kerbing, gutters, and paving sets.

The sizes of the flagging for footpaths proposed to be used are about three feet by two feet, and one foot and a half by two feet (for the breaking of joint) by two inches and a half thick, but the sizes and thicknesses may vary according to the area required to be paved or to any other circumstance.

The blocks for kerbing I propose to make two feet long, six inches wide at top, eight inches at bottom, and twelve inches deep-levelled.

The blocks for the side gutters I propose to make eighteen inches long, twelve inches broad, five inches, six inches, and seven inches thick, flat or levelled; but all blocks may be varied in dimensions.

For vestibules I propose to use in some cases flags of variegated colours—red, yellow, green, blue, &c. These colours will be mixed in during the process of manufacturing the pavement.

The invention consists in the mixing of sand, or gravel, or scoria, or granite, or any other material broken or ground to the fineness of sand or gravel, with Portland cement, or hydraulic lime and water, in the proportions of two of sand or gravel to one of cement or lime, and moulding or pressing the composition into shapes suitable for flags, kerbs, gutters, sets, &c. With the view of adding strength to the flagging, I propose to place pieces of flat or hoop iron in the centres of the flags or slabs, while they are in process of manufacture.

I do not confine myself to the dimensions herein given, as these may be varied according to circumstances, nor do I bind myself to the proportions given of cement, or lime, or sand, or gravel, or other material, nor to any particular kind of cement or lime, nor to the use of iron.

I believe this invention possesses the useful qualities of the Caithness, Arbroath, and Yorkshire flagging, and the granite kerbing, guttering, &c., of London and Glasgow, and will supply a want which has long been felt in this Colony, where good stone is scarce.

Among the advantages which may be gained by this artificial flagging over fixed concrete or asphalte, may be mentioned the ease with which lifting and relaying can be done, when gas, water, or drain-pipes necessitate the breaking through the footpath.

Claim—

Having thus described the general method, application, and uses of the invention, what I claim as novel, and therefore to be protected by Letters Patent, is the application of concrete, made as herein described, and strengthened by pieces of iron as described, to the manufacture of flags, &c., for the purposes mentioned, or for any similar purpose.

CHARLES O'NEILL,
Mem. Inst. C.E.

This is the specification referred to in the annexed Letters of Registration granted to Charles O'Neill, this twenty-fifth day of May, A.D. 1880.

AUGUSTUS LOFTUS.

REPORT.

Sydney, 28 July, 1880.

Sir,

The application of Mr. Charles O'Neill for Letters of Registration for the manufacture of "O'Neill's Patent Caithness Concrete Flagging," having been referred to us, we have examined the specification accompanying the same, and have the honor to report that we see no objection to the issue of Letters of Registration as prayed for.

We have, &c.,
JAMES BARNET.
EDMUND FOSBERY.

The Principal Under Secretary.

No. 870.

[Mortgage of 869.]

No. 871.

[Assignment No. 789. See page 1 of this Return.]

No. 872.

[Assignment No. 861. See page 227 of this Return.]

No. 873.

[No Letters of Registration of this number. It was skipped in error.]

A.D. 1880, *7th September.* No. 874.

IMPROVEMENTS IN LININGS FOR WELLS.

LETTERS OF REGISTRATION to James Taylor, for Improvements in Linings for Wells.

[Registered on the 8th day of September, 1880, in pursuance of the Act 16 Vic. No. 24.]

BY His Excellency the Right Honorable Sir Augustus William Frederick Spencer Loftus (commonly called Lord Augustus Loftus), Knight Grand Cross of the Most Honorable Order of the Bath, a Member of Her Majesty's Most Honorable Privy Council, Governor and Commander-in-Chief of the Colony of New South Wales and its Dependencies.

TO ALL TO WHOM THESE PRESENTS SHALL COME, greeting:

WHEREAS James Taylor, of Wilcannia, in New South Wales, well-borer, hath by his Petition humbly represented to me that he is the author or designer of a certain invention or improvement in manufactures, that is to say, of an invention entitled "Improvements in Linings for Wells," which is more particularly described in the specification and the sheet of drawings which are hereunto annexed; and that he, the said Petitioner, hath deposited with the Honorable the Treasurer of the Colony of New South South Wales the sum of Twenty Pounds sterling, for defraying the expense of granting these Letters of Registration, as required by the Act of Council, sixteenth Victoria, number twenty-four; and hath humbly prayed that I would be pleased to grant Letters of Registration, whereby the exclusive enjoyment and advantage of the said invention or improvement might be secured to him for a period of fourteen years: And I, being willing to give encouragement to all inventions and improvements in the arts or manufactures which may be for the public good, and having received a report favourable to the prayer of the said Petition, from competent persons appointed by me to examine and consider the matters stated therein and to report thereon for my information, am pleased, with the advice of the Executive Council, and in exercise of the power and authority given to me by the said Act of Council, to grant, and do by these Letters of Registration grant unto the said James Taylor, his executors, administrators, and assigns, the exclusive enjoyment and advantage of the said invention or improvement, for and during the term of fourteen years from the date hereof; to have, hold, and exercise unto the said James Taylor, his executors, administrators, and assigns, the exclusive enjoyment and advantage thereof, for and during and unto the full end and term of fourteen years from the date of these presents next and immediately ensuing, and fully to be complete and ended: Provided always, that if the said James Taylor shall not, within three days after the granting of these Letters of Registration, register the same in the proper office in the Supreme Court, at Sydney, in the said Colony of New South Wales, then these Letters of Registration, and all advantages whatsoever hereby granted, shall cease and become void.

In witness whereof, I have hereunto set my sign manual, and have caused the present Letters of Registration to be sealed with the seal of the said Colony of New South Wales, at Government House, Sydney, in New South Wales, this seventh day of September, in the year of our Lord one thousand eight hundred and eighty.

[L.S.] AUGUSTUS LOFTUS.

SPECIFICATION

Improvements in Linings for Wells.

SPECIFICATION of JAMES TAYLOR, of Wilcannia, in New South Wales, well-borer, for an invention entitled "Improvements in Linings for Wells."

THIS invention consists of certain improvements in linings for wells, the object of which is to keep back the drift-sand and yet allow the water to enter the well. For this purpose I make the lining of hollow earthen or pottery ware perforated from both sides into this hollow part, so as to allow of the passage of the water, but with the hollow part filled with some material which will keep back the drift-sand and yet allow the water to percolate or filtrate through it. For this purpose I prefer to use crushed charcoal or coarse sand. This lining I make in a series of cylinders, one resting on the other, and each composed of a number of segments. I have found six a practicable number. The bottom of the lowest of these cylinders I arm with a cutting shoe to assist in making its way into the bottom of the bore, and sometimes I find it necessary to apply pressure to the top of my cylindrical lining in order to force it into the position I desire it to occupy.

In order however that my invention may be clearly understood I will now refer to the drawings hereto attached, where figure 1 shows elevation of my lining in position; figure 2, vertical section of same; figure 3, plan; and figure 4, horizontal section.

The segmental pieces forming the cylinder are marked A, the perforations therein are marked B, and the hollow spaces therein filled with crushed charcoal, &c., are marked C. D is an iron shoe having a cutting edge at the bottom. This shoe is fastened on to the cylinder by means of a groove, D^1, fitting on to a ring, A^1, on the outside of said cylinder, the mortise thus made being fastened by cement or any other approved method. E E are simply tightening battens as commonly used.

In putting my invention into practice I use one of the well-borers now in common use, preferring those known as M'Kay and Cox's patent; and I put in segment alongside segment in the bore until a complete cylinder is made, applying pressure where necessary to the top of such cylinder, either to force it into position on the top of the cylinder next below it or to force down the whole lining from top to bottom.

My lining is of course no better than many other linings except where there is drift sand, but in some cases I prefer to use it from top to bottom as a matter of convenience, even in that part of the bore where there is no drift, whilst in others I line the upper part, or where there is no drift, with slabs or any other ordinary lining, and insert my patent lining only where the drift is. I do not confine myself to any particular appliances for making the bore or for setting my lining in position, neither do I make any claim for any method of doing this, but

What I do claim is—

Making the linings of wells of hollow earthen or pottery ware perforated from both sides into the hollow part, and filling such hollow part with a material—such as crushed charcoal or coarse sand—which will allow of the passage of the water and yet keep back the drift or drift sand; such linings being made of a series of cylinders, and each cylinder being made by preference in segments, substantially as herein described and explained.

In witness whereof I, the said James Taylor, have hereto set my hand and seal, this seventh day of July, one thousand eight hundred and eighty.

JAMES TAYLOR.

Witness—
U. S. BAYSTON,
Clerk to Edwd. Waters, Patent Agent, Melbourne.

This is the specification referred to in the annexed Letters of Registration granted to James Taylor, this seventh day of September, A.D. 1880.

AUGUSTUS LOFTUS.

REPORT.

Sydney, 30 July, 1880.

Sir,

We do ourselves the honor to state that on examination we find no objection to the issue of Letters of Registration in favour of Mr. James Taylor, for his invention of "Improvements in Linings for Wells," in accordance with Mr. Taylor's Petition, specification, drawings, and claim, transmitted for our report under your blank cover communication of the 20th instant, No. 5,686.

We have, &c.,
GOTHER K. MANN.
JAMES BARNET.

The Principal Under Secretary.

[Drawings—one sheet.]

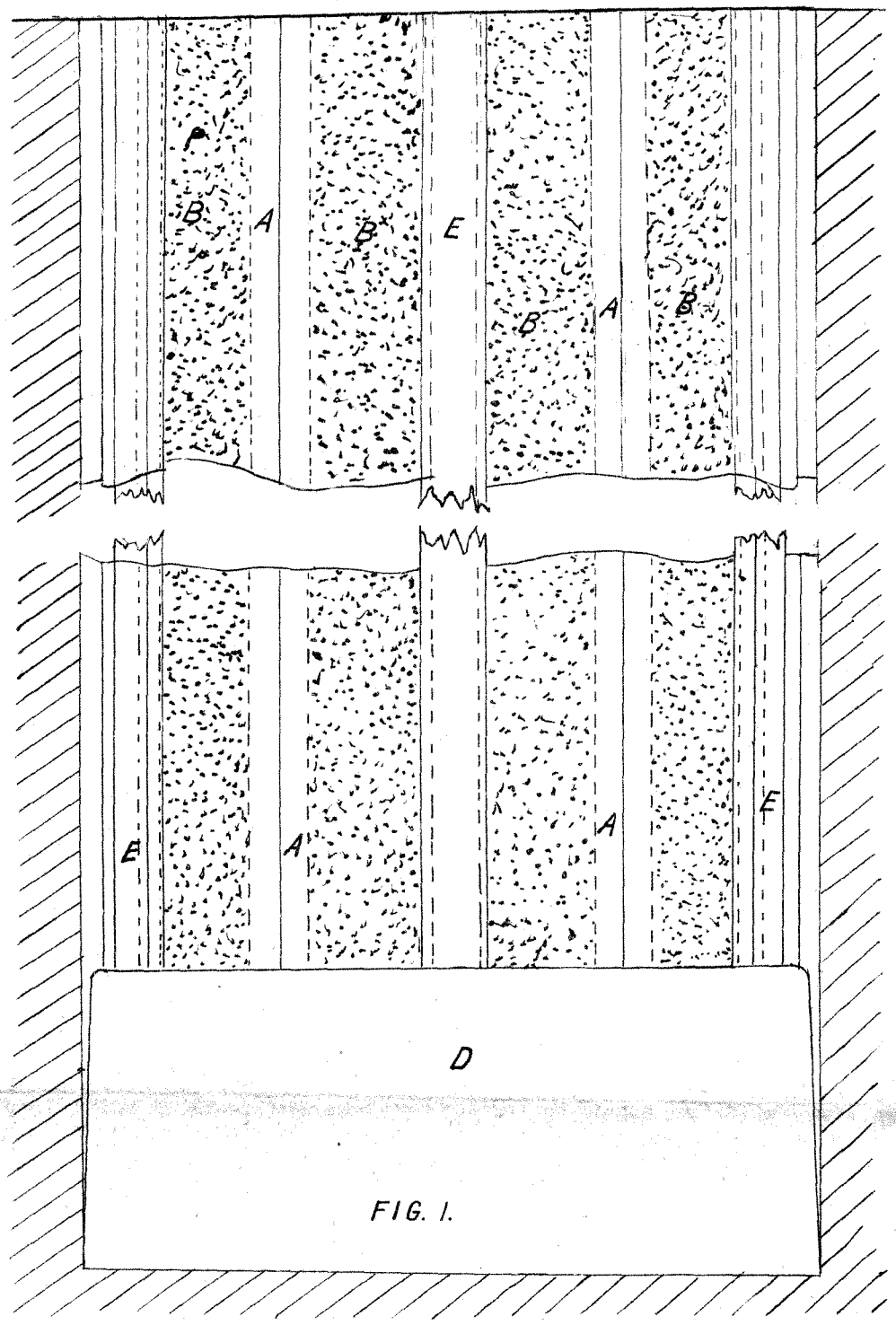

FIG. 1.

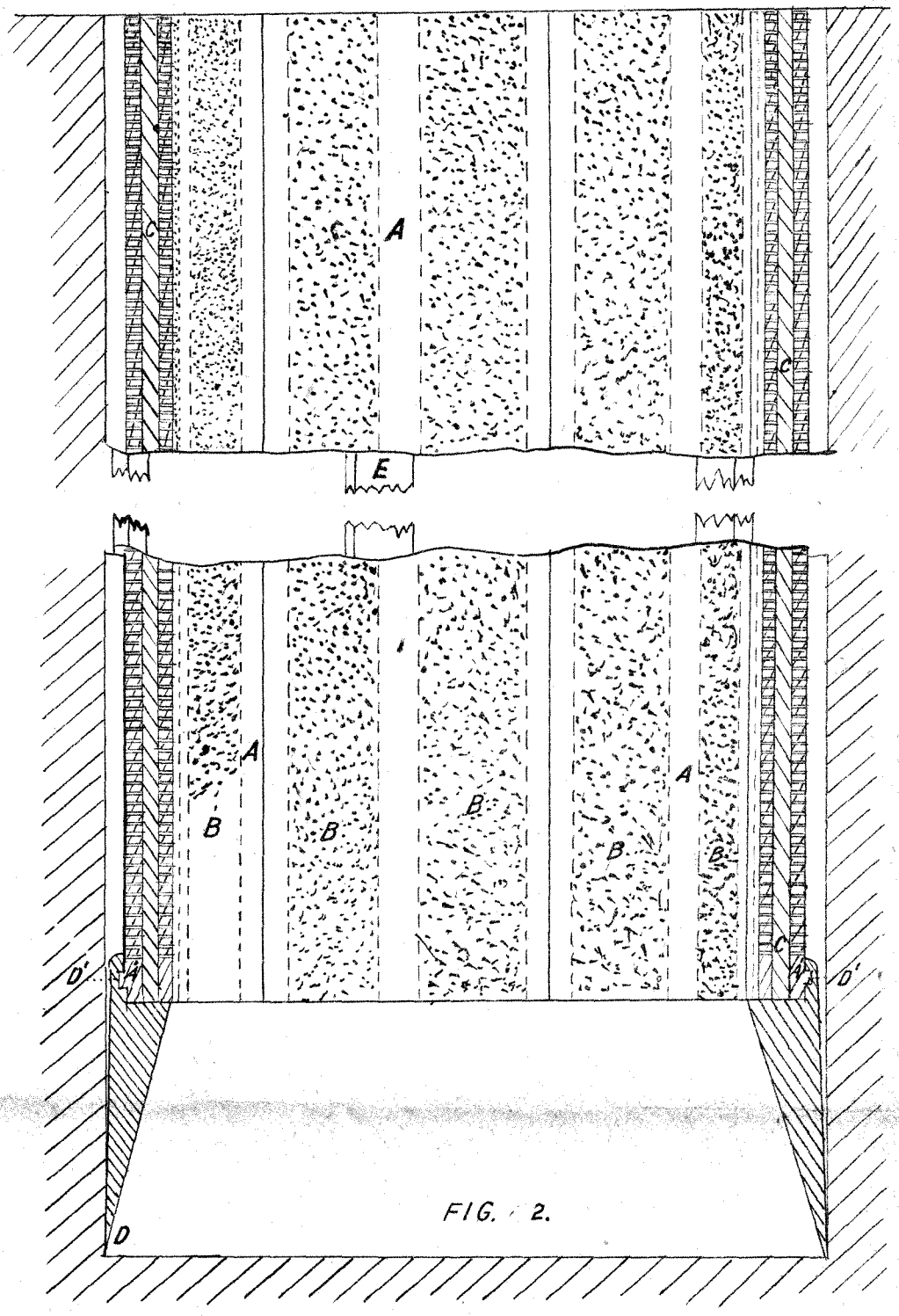

FIG. 2.

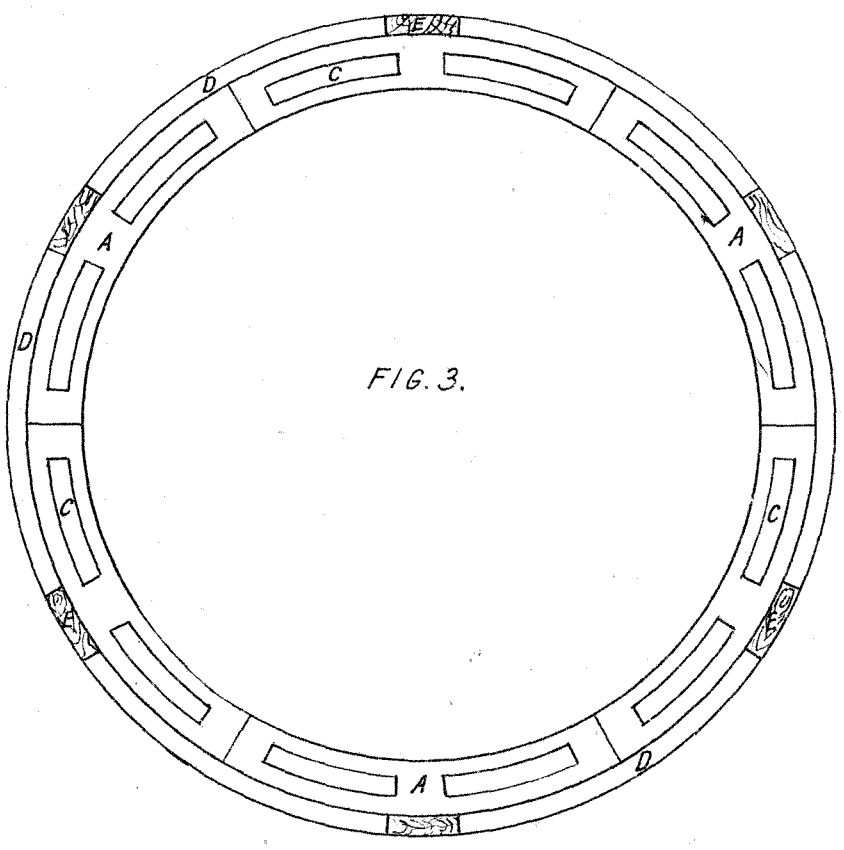

FIG. 3.

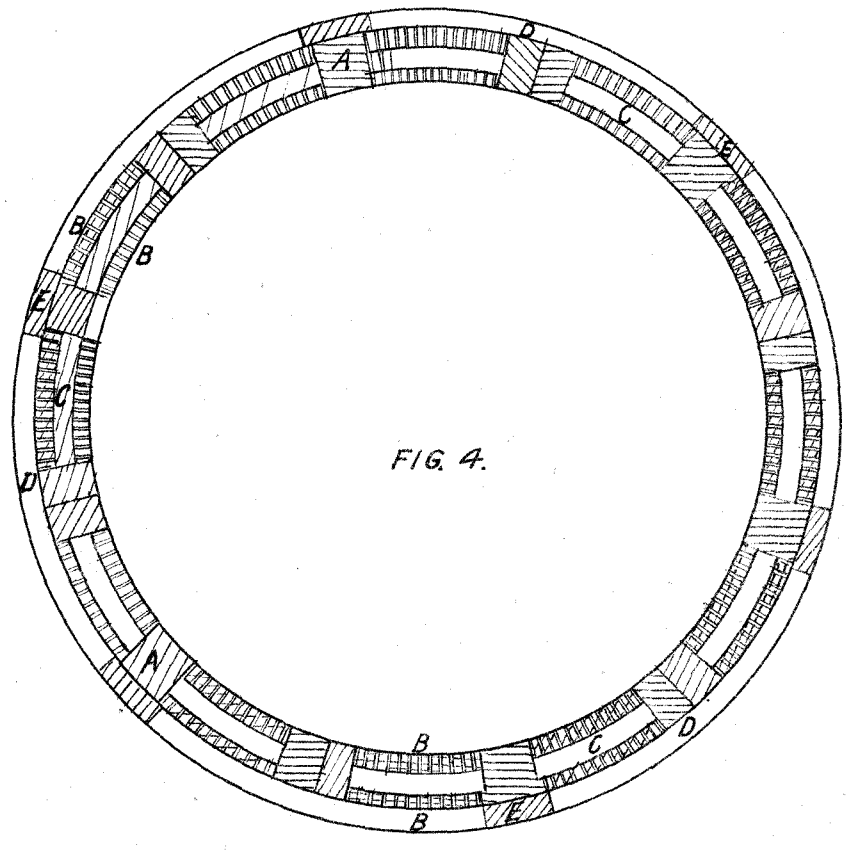

FIG. 4.

(Sig. 357)

This is the Sheet of Drawings referred to in the annexed Letters of Registration granted to James Taylor, this Seventh day of September, A.D., 1880

Augustus Loftus

A.D. 1880, 16*th September*. No. 875.

IMPROVEMENTS IN TELEPHONIC COMMUNICATION.

LETTERS OF REGISTRATION to Thomas Alva Edison, for Improvements in methods and appliances for Telephonic Communication.

[Registered on the 17th day of September, 1880, in pursuance of the Act 16 Vic. No. 24.]

BY HIS EXCELLENCY THE RIGHT HONORABLE SIR AUGUSTUS WILLIAM FREDERICK SPENCER LOFTUS (commonly called LORD AUGUSTUS LOFTUS), Knight Grand Cross of the Most Honorable Order of the Bath, a Member of Her Majesty's Most Honorable Privy Council, Governor and Commander-in-Chief of the Colony of New South Wales and its Dependencies.

TO ALL TO WHOM THESE PRESENTS SHALL COME, greeting:

WHEREAS THOMAS ALVA EDISON, of Menlo Park, in the State of New Jersey, one of the United States of America, electrician, hath by his Petition humbly represented to me that he is the author or designer of a certain invention or improvement in manufactures, that is to say, of an invention entitled "Improvements in methods and appliances for Telephonic Communication," which is more particularly described in the amended specification, marked A, and the three sheets of drawings, marked B, C, and D, respectively, which are hereunto annexed; and that he, the said Petitioner, hath deposited with the Honorable the Treasurer of the said Colony of New South Wales the sum of Twenty Pounds sterling, for defraying the expense of granting these Letters of Registration, as required by the Act of Council, sixteenth Victoria, number twenty-four; and hath humbly prayed that I would be pleased to grant Letters of Registration, whereby the exclusive enjoyment and advantage of the said invention or improvement might be secured to him for a period of fourteen years: And I, being willing to give encouragement to all inventions and improvements in the arts or manufactures which may be for the public good, and having received a report favourable to the prayer of the said Petition, from competent persons appointed by me to examine and consider the matters stated therein and to report thereon for my information, am pleased, with the advice of the Executive Council, and in exercise of the power and authority given to me by the said Act of Council, to grant, and do by these Letters of Registration grant unto the said Thomas Alva Edison, his executors, administrators, and assigns, the exclusive enjoyment and advantage of the said invention or improvement, for and during the term of fourteen years from the date hereof; to have, hold, and exercise unto the said Thomas Alva Edison, his executors, administrators, and assigns, the exclusive enjoyment and advantage thereof, for and during and unto the full end and term of fourteen years from the date of these presents next and immediately ensuing, and fully to be complete and ended: Provided always, that if the said Thomas Alva Edison shall not, within three days after the granting of these Letters of Registration, register the same in the proper office in the Supreme Court, at Sydney, in the said Colony of New South Wales, then these Letters of Registration, and all advantages whatsoever hereby granted, shall cease and become void.

In witness whereof, I have hereunto set my sign manual, and have caused the present Letters of Registration to be sealed with the seal of the said Colony of New South Wales, at Government House, Sydney, in New South Wales, this sixteenth day of September, in the year of our Lord one thousand eight hundred and eighty.

[L.S.] AUGUSTUS LOFTUS.

A.D. 1880. No. 875.

Improvements in Telephonic Communication.

A.

SPECIFICATION of THOMAS ALVA EDISON, of Menlo Park, in the State of New Jersey, one of the United States of America, electrician, for an invention entitled "Improvements in methods and appliances for Telephonic Communication."

THIS invention relates to peculiarities in the construction of telephones, whereby great perfection is attained in the transmission of sound. It also relates to the construction and arrangement of instruments and electrical circuit connections, whereby a number of telephones in different places are connected by lines to a common central office, in such a manner that any telephone can at pleasure be placed in direct connection with any of the other telephones, and the persons at these two instruments can converse without being overheard. Such a system is called a telephone exchange.

I.

(a) The transmitting telephone B is shown sectionally in fig. 5. It has a diaphragm, *a*, behind a mouth-piece, *d*, and there is a button, *e*, of carbon or similar material introduced into the electric circuit. The vibrations of the diaphragm, when spoken against, vary the pressure of the electric circuit connections upon the carbon button, and produce corresponding variations of the current passing through the button.

(b) Fig. 5 shows the carbon button *e* held between the cup e^1 and the plate *g*, which is in contact with the central projection of the diaphragm. The cup e^1 is supported by a spring, *f*, and a lever, f^1, and the screw f^2 serves to adjust the initial pressure upon the carbon button. The conductors 14, 14, are connected to opposite sides of the carbon, so that the current must pass through the carbon, and its strength depends on the pressure upon the carbon.

(c) Another form of the transmitter is shown in fig. 5 A and fig. 5 B. Attached to the centre of the back of the diaphragm and insulated from it is a metal ring, F, with three feet which rest upon the metallized surface of a hard carbon button, 8. Under this hard carbon is a soft carbon, *e*, resting on a metal plate, e^1, which should be platinum-faced. There is an insulating ring, *b*, which holds the carbons in place.

(d) To complete the transmitting apparatus I have an induction coil D, with its primary in circuit with a battery, and its secondary in the line circuit.

II.

(a) The signalling instrument is shown in fig. 7, as with the cover open. There is a permanent magnet, *l*, secured in the case; and revolving electro-magnets l^1 are placed upon the shaft 22, turned by the crank l^2, gear-wheel l^3, and pinion 20.

(b) Upon well-known principles the revolution of an electro-magnet in the field of a permanent magnet sets up electric currents in the coils of the electro-magnet. The currents generated in the electro-magnets l^1 are taken off by a commutator spring 21, which rests upon conductors on the shaft 22. These currents are used for ringing the bells C at the distant station. Alternate positive and negative currents are sent to the other end of the line, where they cause the armature of the electro-magnet C^1 to vibrate, thus ringing the bells C.

(c) The button 82 works a spring, which keeps a shunt closed around the electro-magnets l^1, in which the signalling currents are generated. Pressing in this button opens the shunt, and brings these electro-magnets into the circuit, ready for signalling. When the button 82 is not depressed, only the bell magnets C^1 are in the circuit.

III.

(a) The receiving telephone is shown in figs. 8 and 9. The diaphragm *a* is of iron, and close to it is the core *n* of an electro-magnet, which is in the line circuit from the transmitting instrument B. The core *n* is kept permanently magnetized by contact with the permanent magnet n^4, which is usually made in the form of a ring or open bow that serves as a convenient handle, by means of which the instrument is hung up when not in use, as shown in fig. 10. This instrument may also be used as a transmitter.

(b) The act of hanging up the instrument A on the hook n^5, figs. 7 and 10, moves on the electric switch in one direction; and taking it off the hook reverses the switch. This switch consists of the lever *o* and the arm 31, which moves upon four contact pieces, securing a sliding contact. When the telephone is lifted off the hook, the handle n^1 moves the switch lever to the right into the position shown by the dotted lines; when the telephone is on the hook the position is shown by the full lines.

(c) The diagram fig. 10 illustrates the circuit connections of the instruments used at one end of a telephone line. The switch and telephone are supposed to be in the position shown by the full lines, fig. 17, and when a call comes over the line L the circuit is through the electro-magnet C^1 of the call-bell to the block 30 and arm 31; and off by the wire 32, 32 to the earth E.

After answering the call the telephone is lifted off the hook n^5, and in so doing the lever *o* is moved, so that arm 31 connects blocks 38 and 41.

The circuit is now by line L to 33, 45, 44, 34, telephone A; thence by 35 and 36 to the secondary coil of the transmitter B; back by wire 37 to block 38, arm 31, and wire 32 to ground.

The reversal of the switch in taking A off the hook n^5 also closes the local circuit to the primary of the induction coil, the local battery L B being connected by 40, 41, 31, 38, and 37, through primary coil and by 42 to L B again.

IV.

(a) The apparatus used at the central office of a telephone exchange will now be described.

Fig. 11 is a front view of the "shutter indicator," and fig. 12 is a sectional view of the same. The shutter S is hinged at s^1, and a latch s^2 on a pivot 50, aided by a light spring s^3 keeps the shutter in position. When a current is passed through the electro-magnet t^1, the armature *t* on the end of the lever s^2 is attracted downwards, and the shutter being unlatched drops to the position shown by the dotted lines.

(b) Fig. 16 shows the connections at the central station. A shutter indicator is provided for each subscriber. There is also a "jack-knife switch," *u*, figs. 13 and 14, for each subscriber. Each switch *u* has an insulated screw 61, which is connected to the magnet of the corresponding shutter indicator. The spring blade 62 closes upon the point of 61; but when a metal peg *v* is put into a hole in *u*, 61 and 62 are separated, and the circuit to the indicator is broken. The blade 62 is pivoted at the other end, and a spring tends to press it down upon the point 61. The jack-knife switch has one or more holes into which the pegs *v* and v^1 are made to fit.

(c)

(c) There are "clearing-out indicators" w, and to each clearing-out indicator a group of three keys. The line wire 70 leads to the circuit-closer 62 of the switch u, and the wire 71 leads from screw 61 to the electro-magnet t^1 of the shutter indicator 17; thence 73 leads to earth.

When subscriber No. 17 signals the central office, the magnet t^1 drops its shutter; the circuit being by 70, 62, 61, t^1, and 73.

The attendant sees the shutter fall, and takes the peg v, which is on a flexible conductor from the key x, places it in jack-knife switch No. 17, and depresses key x; thus answering the subscriber's signal by means of battery K and pole-changer P C; the circuit being by L 70, u, 62, key x, v to P C, K, earth next releasing key x and depressing key z, he brings his own telephone into the subscriber's circuit; the circuit being by 70, u 62, v x 76, y 77, telephone A, and thence to ground. The subscriber gives the number of the person with whom he wishes to speak, and the attendant releasing key y, puts the peg v^1 (which is on a flexible conductor from key z) into the jack-knife switch of the party called for. He then depresses key z, which sends a current from K and P C over the line of the party called for, ringing that party's call-bell. The person called answers the signal, and thus drops the shutter w. The attendant, having already released key z, sees the shutter drop, and knows that the two parties are in communication; the circuit being by 70, v x 75, w 80, z and peg v^1 to the other subscriber.

The pegs v and v^1 being on flexible conductors, any pair of pegs with their groups of keys may be used in connecting any two subscribers.

(d) The connection between two persons talking is through the helix of the clearing-out indicator w. When the conversation is finished each hangs up his telephone, and the one who called signals again, dropping the shutter w and notifying the attendant to disconnect, which he does by removing the pegs v v^1 from the jack-knife switches of the two subscribers.

(e) An alternative construction of the shutter indicator is shown in fig. 12 A. The plate s is pivoted at each side at s^1, the part above s^1 being heavier than the part below s^1. The stop s^3 is so placed that when the indicator is in position the centre of gravity of the plate s falls to the right of s^1, and the plate remains upright, resting lightly against s^3. The electro-magnet t^1 is placed horizontally, and the end of the core t^2 is hollowed out and brought close to the bottom of the plate s, so that the plate just clears t^2 in swinging, as shown by the dotted lines.

The plate s is either itself an armature to the electro-magnet t^1, or a light armature is attached to it at s^2, a current passing through t^1 draws s^2 inward, causing the top of the plate to fall outward. There may be two electro-magnets t^1, with their cores t^2, acting upon the armature s^2.

V.

An alternative telephone exchange system may be described as follows:—

(a) From each subscriber's station I run two wires to a common central office, one of which wires I preferably run to no other station, although several stations may be located thereon; and the other wire we run to as many other subscribers' stations as the amount of business done by them warrants. The first is the private; the last is the call or signal wire. The signal wire being common to a number of subscribers, any one, on going to his instrument, may ascertain whether any other subscriber is signalling, and if so to wait until the signal wire is not in use before signalling. At the office end of the signal wire is a receiving operator, with the receiving telephone at his ear, ready to receive the orders of any subscriber. These orders he repeats into a transmitter in front of him, so as to be heard by the subscriber, and at the same time by another operator at the switch board in the central office, who instantly connects the two private wires and subscribers so indicated. As he does so, he notifies both subscribers by means of bells in circuit on their wires. The same course is pursued when the conversation is concluded and disconnection is desired, except as to the ringing of the bells.

Fig. 19 is a plan of this system for connecting a central office and its subscribers. Fig. 20 is a plan of this system for connecting the subscribers who belong to one central office with those belonging to another central office. Fig. 21 shows two subscribers' stations, and central office with instruments and receiving operator in position.

In fig. 19, K represents a central office, and a b c represent a given number of subscribers' stations, each of which is connected with the common central office by two wires, the first of which is marked W, and the second a^2 b^2 c^2 respectively; and also W^1 in common.

Now if the subscriber at a wishes to communicate with the subscriber at b, he gives his order to the listening operator at the central office X, by means of the wire W, and the listening operator notifies the operator at the switch board, who connects the wires a^2 and b^2.

The subscribers at a and b having finished their conversation, either one makes known the fact to the listening operator at X, and a^2 and b^2 are disconnected.

(c) Where distances are great I establish two or more central stations, converging at each the wires from subscribers near it, and connecting all the central offices together by as many wires as may be required.

Now should a wish to talk with a subscriber in any other central office system, as d, fig 21, he gives his order by means of the wire W to the operator at X, who connects the wire a^2 with one of the wires A^1 A^2 A^3, and instructs the operator at central office Z by means of another of the wires A^1 A^2 A^3, used as a signal wire between central stations (two or more) to connect the wire d^2 with the wire A^1 A^2 or A^3 first-mentioned.

(d) In fig. 21, Nos. 1 and 2 represent the instrument at two subscribers' stations, wherein R R are the receiving telephones, and C C the transmitters.

S S are switch devices for connecting the instruments at will with either the signal wire or with the private wires. S^1 is the central office switch board, whereby the private wires are connected, by inserting the pegs E E into the holes H H of the bar B. O represents the listening operator, with the receiver at his ear, and a transmitter in front of him, by means of which he answers any subscriber on the call wire. W is the call or signal wire, and W^1 the private wire. S^2 represents the helix and signal bell, with ground wire G.

The switch board operator, before inserting the pegs E E in the bar B, touches them to the bar B^1, connected to the battery C and ground wire G; thus ringing the bells D by means of the circuit through the wire W^1, the studs or connections F F, helix S^2, and lever L.

The

The spring S^3 on the end of the stem of the switch S forces back the switch, so that the central office may always call the subscriber, since his signal bell is always in circuit. On calling or being called the subscriber takes his receiver from its holder H, which allows the holder to rise and make connection at K, thus bringing the transmitter and battery into circuit.

P^1 is the plate of the transmitter, which is an Edison or other like transmitter. The subscriber places the receiver to his ear, and if he wishes to talk with the central office by the signal wire, he pushes in the switch S, which connects his transmitter with the signal wire W and permits him to talk with the operator in the central office. On releasing the switch S, the spring S^3 throws back the switch, and connects the instruments with the private wire alone.

(e) The switching system shown in fig. 16 answers for exchanges with less than 300 subscribers, but for a larger number the system may be modified as follows:—

"Duplicate boards" are used; that is, two or more switch boards, each of which has a switch bolt connected to each subscriber's wire.

The connections of such a system are shown in fig. 18, A and B representing duplicate boards.

The line *l* is connected to jack-knife 1 of A, and the insulated point of A^1 is connected to jack-knife 1*a* of B, from insulated point of 1*a* to 3*a*, insulated point of 3*a* to jack-knife 3, and from its insulated point to the indicator. The connections of the other lines in the system are similar.

Now a peg inserted into 1 opens the circuit there; so that a peg put into 1*a* will not connect with the line *l*; or if a peg is put into 3*a*, a peg in 3 will not connect with *l*. The operator at each board has in his calling circuit some instrument to indicate a signal. If now the operator at A wishes to use the line *l*, he ascertains whether the line is in use by putting a peg into 3 and signalling. If his indicator shows circuit he knows that *l* is free, but if it does not show circuit he knows that *l* is in use at B.

In the same manner the operator at B may ascertain if *l* is in use at A by connecting to 3*a* and signalling.

(f) The indicators may be placed over the switch boards, a proportion being alloted to each board. The calls received on indicators over A will be answered by an operator at A; those received over B will be answered by an operator at B. Or the indicators may be placed apart, with special connecting bolts and calling apparatus, and a special operator to answer signals and receive orders from subscribers. This operator will repeat the orders to the switch board operator at A or B, the whole mode of procedure being similar to that described in V*d*.

(g) When duplicate boards are used in a system with special calling wires, testing screws or bolts replace the jack-knife switches 3, 3*a*, 4, 4*a*, as shown in fig. 18A.

The duplicate boards may be two or more in number.

VI.

(a) The object of the pole-changer P C is to send alternating, positive, and negative currents through any line in the telephone exchange system for the purpose of ringing the subscriber's bell.

The armature *a* of the polarized relay, figs. 22 and 23, vibrates between the poles of the electro-magnet *b*. The rod *c*, attached to the armature *a*, is extended out a convenient length, say from 6 to 10 inches, and is fitted with a sliding weight *d*, fastened by a clamping screw, to adjust the rate of vibration. The rod *c* hangs perpendicularly, forming a pendulum, pivoted at the top in the permanent magnet *f*. A local battery actuates the armature *a* through the electro-magnet *b*, the polarity of which is reversed by means of the vibrating rod and the springs *g*, shown in section in fig. 24. Platinum points *o* are attached to the rod *c*, and ivory points *n* to the standard *s*. The two springs of *s* are insulated from each other by the ebonite block *q*, and are connected to the electro-magnet by the wires *p*. The local battery is so connected that when the current is passing through either helix of the electro-magnet that helix repels the armature *a*, one battery pole being brought to the armature and the other to the tie-wire of the electro-magnet. Therefore, as the armature swings toward either side it puts the battery through the helix on that side, thus repelling the armature and maintaining a continuous vibration.

(b) By means of the springs *h* alternating currents are sent forth from the calling battery. There are platinum points, *m*, fig. 25, on the rod *c*, and also on the standard *i*; and there are ivory points on the springs *h*. One pole of the calling battery is connected to the rod *c*, the other pole to the standard *i*. One of the springs *h* is connected to line, the other to ground. Now, as the rod swings to one side it puts the positive pole to line and the negative to ground; as it swings to the other side, it puts the negative to line and the positive to ground. These alternating currents pass out over the line, and actuate the electro-magnet of the call-bell at the subscriber's office.

(c) It is sometimes preferred to pass the alternating currents thus generated through the primary of an induction coil, and use the induced currents of the secondary coil for calling purposes. This requires less battery, and avoids interference with other lines by powerful battery currents.

VII.

It is sometimes convenient to place a number of telephones in the same circuit at several stations on a line.

When two or more of these stations are communicating, the bell magnets of the stations not engaged in the conversation remain in circuit. The telephonic currents, passing through these magnets, induce extra currents, which interfere with the original currents in their effect upon the receiving telephones. A resistance coil is therefore placed in a shunt around the bell magnets, and the extra currents complete their circuit by passing around this shunt instead of going through the line.

Claims—

1—In a telephone transmitter the combination of the plate e^1 supported by the spring *f* and the lever f^1, substantially as shown in fig. 5.

2—In a telephone transmitter the combination of the lever f^1 with the adjusting screw f^2, substantially as shown in fig. 5.

3—In a telephone transmitter the combination of a diaphragm or equivalent body, an electric circuit, and a variable resistance, composed of two or more carbon buttons or disks, one hard and the other soft.

4—In a telephone transmitter the metallization of one or more contact surfaces in the variable resistance part of the circuit.
5—In a telephone transmitter the combination with a diaphragm of a metal ring resting by three feet upon any surface whereon variation of pressure varies the resistance of the circuit.
6—The combination with a telephone circuit of a magneto-electric call-box, substantially of the construction shown in fig. 7.
7—The combination with a telephone of a permanent magnet, forming a hook or open bow handle, substantially as shown.
8—
9—
10—The combination of parts constituting the "jack-knife switch," constructed substantially as shown.
11—The combination of a "clearing-out indicator" with a telephonic system, substantially as shown and for the purpose described.
12—The combination with a telephonic system of the groups of keys, with their circuit connections, substantially as shown.
13—The combination of parts forming my alternative construction of the shutter indicator, substantially as shown in fig. 12 A.
14—In a telephone exchange system the signal wire W extending to a series of stations, in combination with direct private wires W^1 W^1, each extending to one or more stations.
15—
16—In a telephone exchange system, the signal wires W W of two or more central offices, and the private wires W^1 W^1 of the same offices connected by the intermediate wires A^1 A^2 or A^3, arranged and operated in the manner and for the purpose shown and described.
17—In a telephone exchange system the signal wires W, the private wires W^1, the receiving instruments R, the transmitting instruments C, the switch devices S, the central office switch-board S^1, the connecting pegs E, and bar B; all in combination, as and for the purposes set forth.
18—In a telephone exchange system, the switch S in combination with the call wire W and private wire W^1, when used and operated as set forth.
19—The combination with telephone circuits of "duplicate boards," that is, two or more switch-boards with switch connections upon each board for the same telephone line.
20—In combination with a telephonic circuit, a polarized relay pole-changer, constructed substantially as shown.
21—The combination of an induction coil with a polarized relay pole-changer, substantially as and for the purpose set forth.
22—The combination with a telephonic circuit of a resistance placed in a shunt around the magnets of the signalling instrument, substantially as and for the purpose set forth.

In witness whereof, I, the said Thomas Alva Edison, have hereto set my hand and seal, this sixth day of July, one thousand eight hundred and eighty.

THOS. A. EDISON,
By his duly authorized Attorney,
F. R. WELLS.

Witness—
W. S. BAYSTON,
Clerk to Edwd. Waters, Patent Agent, Melbourne.

This is the amended specification, marked A, referred to in the annexed Letters of Registration granted to Thomas Alva Edison, this sixteenth day of September, A.D. 1880.

AUGUSTUS LOFTUS.

REPORTS.

Sir,

Sydney, 29 July, 1880.

The application of Mr. T. A. Edison for Letters of Registration for "Improvements in methods and appliances for Telephonic Communication" having been referred to us, we have examined the specification and drawings accompanying the same, and have now the honor to report that in our opinion Letters of Registration may be granted for the general arrangements of a Telephonic Exchange, substantially as described and figured, but that certain claims taken separately do not present sufficient novelty to warrant protection of such a nature as claims 8, 9, 12, and 15, which we therefore recommend to be excluded.

We have, &c.,
J. SMITH.
E. C. CRACKNELL.

The Principal Under Secretary.

MEMO.—On the amended specification, and withdrawing our objection to claim 12, after explanations by Mr. Wells (Mr. Edison's attorney), we consider that Letters of Registration may now be issued.

J. SMITH.
E. C. CRACKNELL.

16 August, 1880.

[Drawings—three sheets.]

Fig. 7.

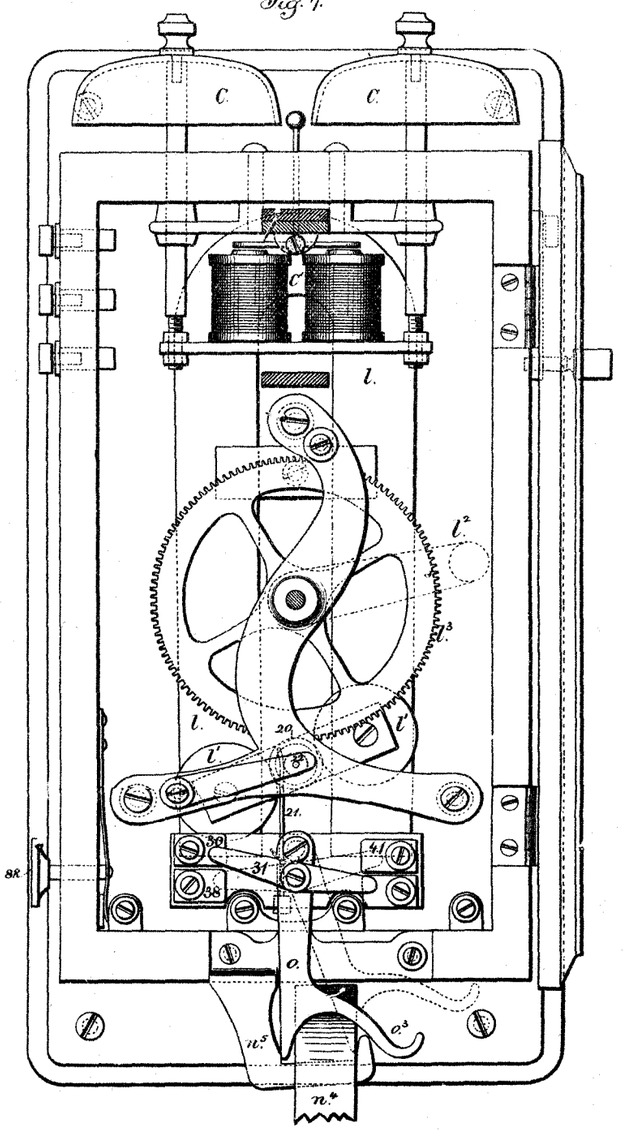

Fig. 10.

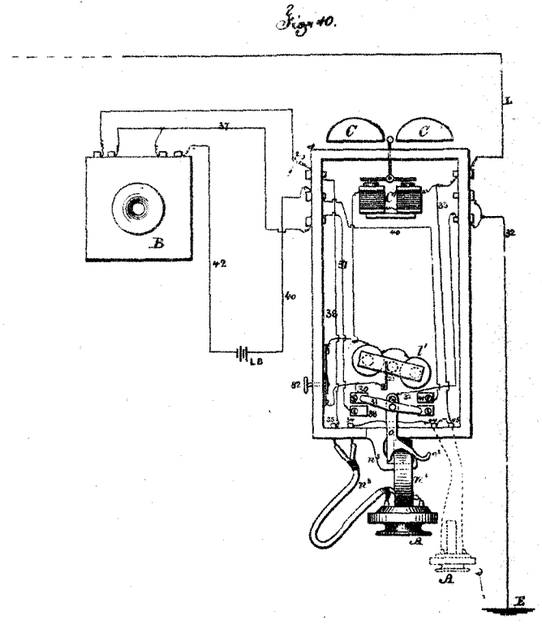

Fig. 5.

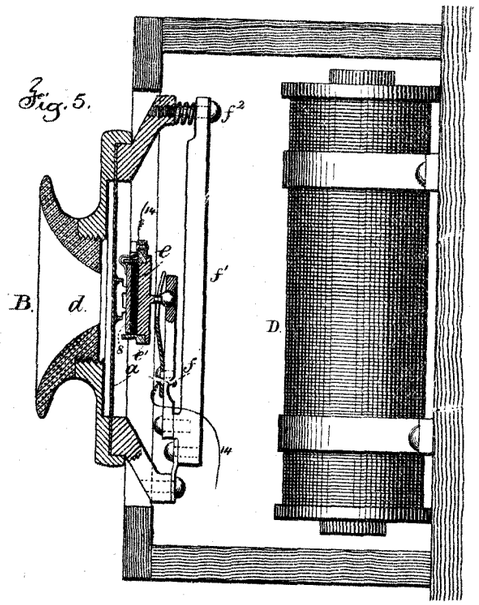

Fig. 8.

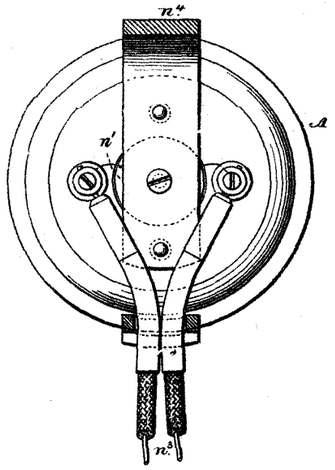

Fig. 9.

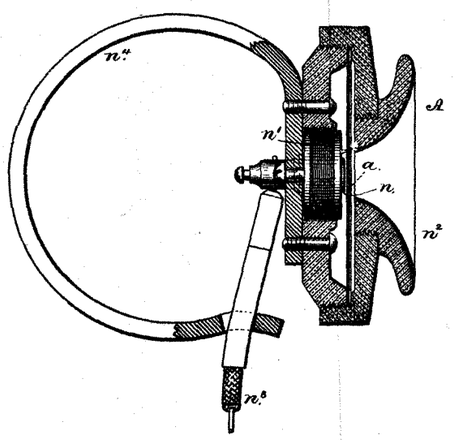

Fig. 4.

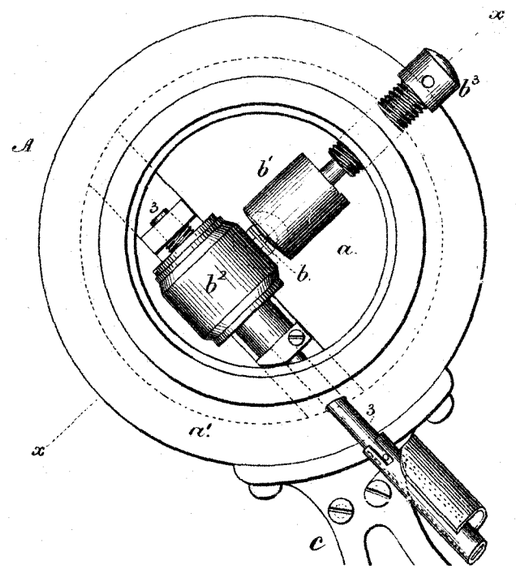

This is the Sheet of Drawings marked B referred to in the annexed Letters of Registration granted to Thomas Alva Edison this Sixteenth day of September A.D., 1880.

Augustus Loftus.

(Sig: 357-)

PHOTO-LITHOGRAPHED AT THE GOVT. PRINTING OFFICE,
SYDNEY, NEW SOUTH WALES.

C.

Fig. 11.

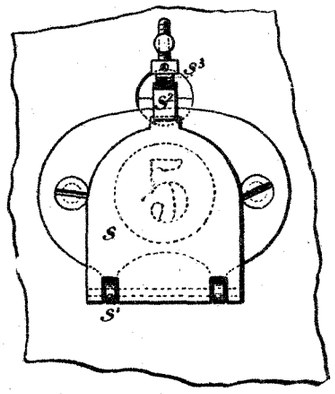

Fig. 12.

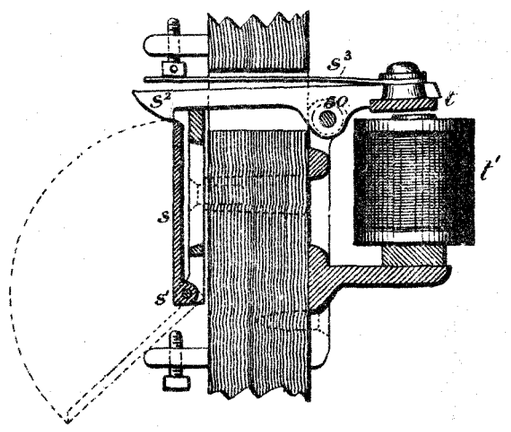

Fig. 13.

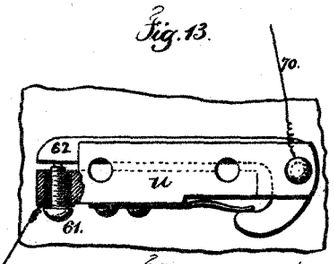

Fig. 14.

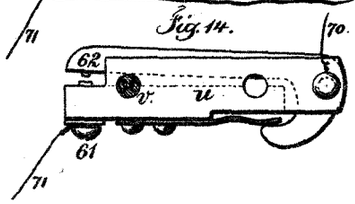

Fig. 15.

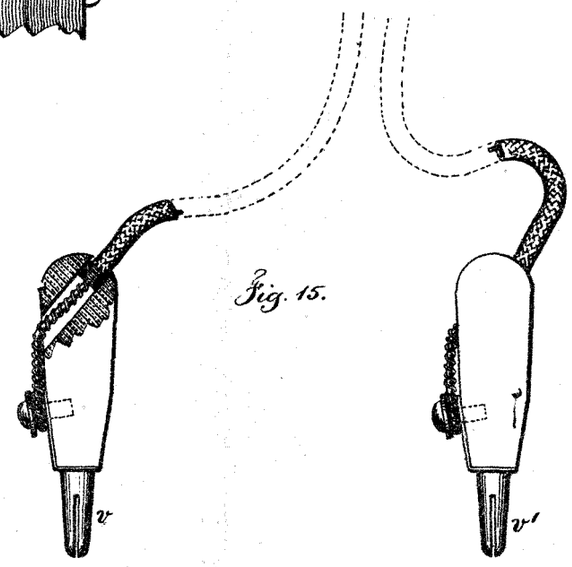

Fig. 16.

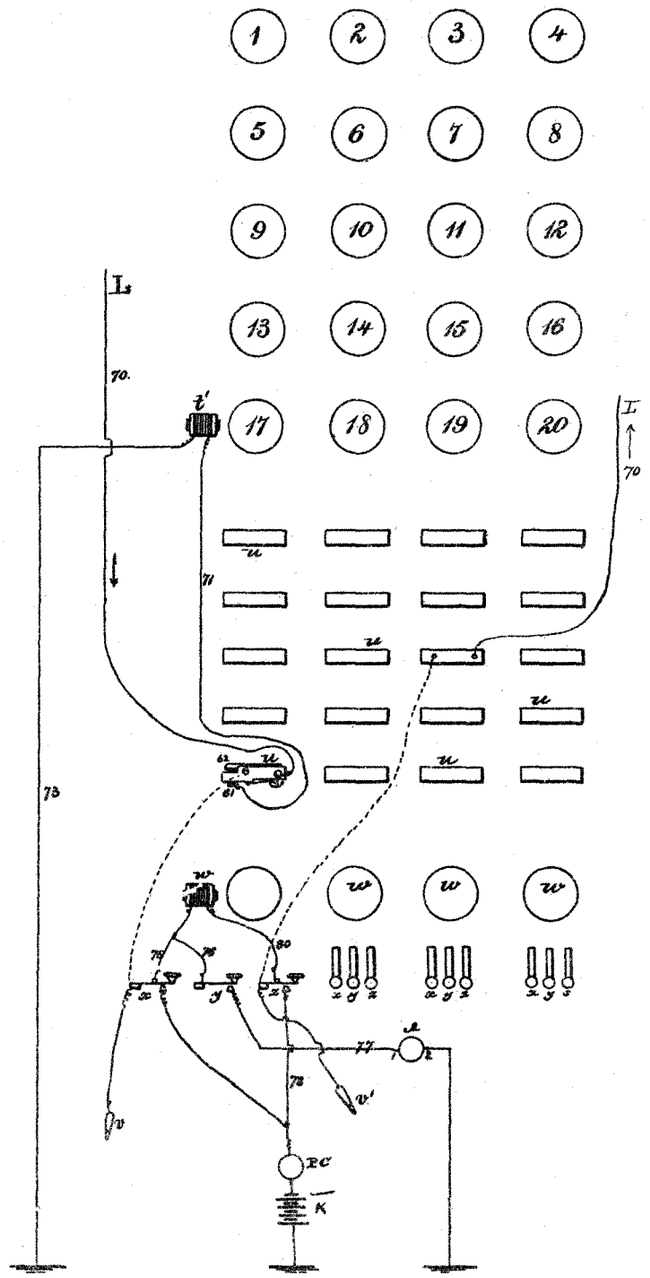

Fig. 17.

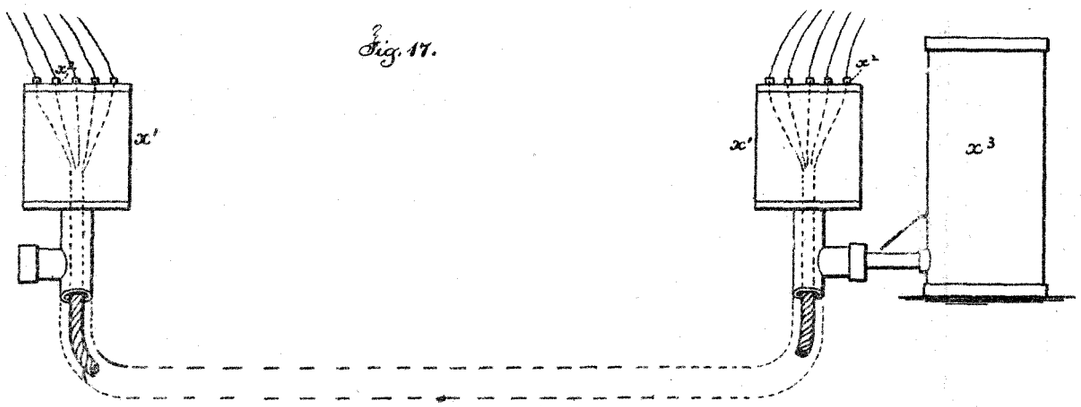

This is the Sheet of Drawings marked C referred to in the annexed Letters of Registration, granted to Thomas Alva Edison this Sixteenth day of September, A.D. 1880.

Augustus Loftus.

(Sig. 357-)

PHOTO-LITHOGRAPHED AT THE GOVT. PRINTING OFFICE, SYDNEY, NEW SOUTH WALES.

Fig: 22.

Fig: 23.

Fig: 5A

Fig: 5B.

Fig: 26.

Fig: 24.
Section on CD

Fig: 25.
Section on AB.

Fig: 12 A.

Fig: 21.

Fig: 19.

Fig: 20.

Fig: 18.

Fig: 18A.

PHOTO-LITHOGRAPHED AT THE GOVT. PRINTING OFFICE,
SYDNEY, NEW SOUTH WALES.

This is the Sheet of Drawings marked D referred to in the annexed Letters of Registration, granted to Thomas Alva Edison this Sixteenth day of September, A.D., 1880.

Augustus Loftus.

(Sig. 357-)

A.D. 1880, 22*nd September*. No. 876.

THE EXCELSIOR SELF-HEATING AND REVOLVING SMOOTHING IRON.

LETTERS OF REGISTRATION to George Weichmann, for an improved self-heating and revolving Smoothing Iron, to be called the "Excelsior self-heating and revolving Smoothing Iron."

[Registered on the 23rd day of September, 1880, in pursuance of the Act 16 Vic. No. 24.]

BY His Excellency the Right Honorable Sir Augustus William Frederick Spencer Loftus, (commonly called Lord Augustus Loftus), Knight Grand Cross of the Most Honorable Order of the Bath, a Member of Her Majesty's Most Honorable Privy Council, Governor and Commander-in-Chief of the Colony of New South Wales and its Dependencies.

TO ALL TO WHOM THESE PRESENTS SHALL COME, greeting:

WHEREAS George Weichmann, of Sydney, in the Colony of New South Wales, tinsmith, hath by his Petition humbly represented to me that he is the author or designer of a certain invention or improvement in manufactures, that is to say, of an invention of an "Improved self-heating and revolving Smoothing Iron, to be called the 'Excelsior self-heating and revolving Smoothing Iron,'" which is more particularly described in the specification and the sheet of drawings which are hereunto annexed; and that he, the said Petitioner, hath deposited with the Honorable the Treasurer of the said Colony of New South Wales the sum of Twenty Pounds sterling, for defraying the expense of granting these Letters of Registration, as required by the Act of Council, sixteenth Victoria, number twenty-four; and hath humbly prayed that I would be pleased to grant Letters of Registration, whereby the exclusive enjoyment and advantage of the said invention or improvement might be secured to him for a period of fourteen years: And I, being willing to give encouragement to all inventions and improvements in the arts or manufactures which may be for the public good, and having received a report favourable to the prayer of the said Petition, from competent persons appointed by me to examine and consider the matters stated therein and to report thereon for my information, am pleased, with the advice of the Executive Council, and in exercise of the power and authority given to me by the said Act of Council, to grant, and do by these Letters of Registration grant unto the said George Weichmann, his executors, administrators, and assigns, the exclusive enjoyment and advantage of the said invention or improvement, for and during the term of fourteen years from the date hereof; to have, hold, and exercise unto the said George Weichmann, his executors, administrators, and assigns, the exclusive enjoyment and advantage thereof, for and during and unto the full end and term of fourteen years from the date of these presents next and immediately ensuing, and fully to be complete and ended: Provided always, that if the said George Weichmann shall not, within three days after the granting of these Letters of Registration, register the same in the proper office in the Supreme Court, at Sydney, in the said Colony of New South Wales, then these Letters of Registration, and all advantages whatsoever hereby granted, shall cease and become void.

In witness whereof, I have hereunto set my sign manual, and have caused the present Letters of Registration to be sealed with the seal of the said Colony of New South Wales, at Government House, Sydney, in New South Wales, this twenty-second day of September, in the year of our Lord one thousand eight hundred and eighty.

[L.S.] AUGUSTUS LOFTUS.

The Excelsior self-heating and revolving Smoothing Iron.

SPECIFICATION.

TO ALL TO WHOM THESE PRESENTS SHALL COME, I, GEORGE WEICHMANN, of Sydney, in the Colony of New South Wales, send greeting:

WHEREAS I am desirous of obtaining Letters of Registration under the sign manual of His Excellency the Governor of the said Colony of New South Wales and the seal of the said Colony, for the exclusive enjoyment and advantage for a period of fourteen years of an invention or improvement in the arts or manufactures, namely, of an "Improved self-heating and revolving Smoothing Iron," invented by me: Now know ye that I, the said George Weichmann, do hereby declare the nature of the said invention and the manner in which performed to be particularly described and ascertained in and by the following statements and description, reference being had to the drawing hereto annexed, and to the letters and figures marked thereon, which indicate the parts herein referred to and herein particularly explained, that is to say:—

Specification for an improved self-heating and revolving smoothing iron to be called the "Excelsior self-heating and revolving Smoothing Iron."

1. My invention consists of an improved hollow smoothing iron with two parallel faces.

2. It revolves on two central pivots. To the front pivot is hinged a small lever handle secured in place by a small self-acting spring; the back pivot is hollow, and fitted with a small lamp of peculiar construction.

3. The burner of this lamp is between the two faces inside the iron, and when lighted heats the upper face; holes are provided at the side of the iron to admit air to ensure a regular burning of lamp.

The different parts of my improved smoothing iron are marked by the following letters on the accompanying drawing:—A is the hollow iron with the two smooth faces B and C; D D are small holes to admit atmospheric air inside the iron; E is the front pivot to which the small lever handle F is hinged and secured in place by the spring G; H is the back hollow pivot, through which the burner K of the lamp L is introduced; M is the receiver for the spirit or oil, and N a tube for the wick. The receiver is closed at S by a screw cover with a vent hole.

Modus operandi:—The lamp having been lighted, heats the upper face of the smoothing iron, until it is ready for use. It is revolved or reversed and brought in the position of the lower face by moving the lever handle F round and securing it in position by the spring G.

During the process of ironing with the lower face of the iron previously heated as hereinbefore described, the lamp is heating the upper face until it is ready for use, when it is reversed again and the operation of self-heating continuously performed as long as required.

The advantages of my invention are—

1. A smoothing iron heated by a small lamp burning inside it.

2. The heating of the upper face of the iron during the process of ironing with the lower face, thus ensuring a continuous work without loss of time.

3. The arrangement of the lamp and burner, by which volatile substances such as spirits of wine contained in an outer receiver can be safely burned inside the smoothing iron.

4. The faces always remaining smooth and clean.

5. Removing the lamp to use the improved iron as a common smoothing iron if necessary.

Having set forth the nature of my invention and the manner in which my improvements are made in self-heating and revolving smoothing irons, it is to be clearly understood before I proceed to state my claims, that I do not bind myself to, nor do I claim the particular form, shape, and dimensions of the different parts of my self-heating and revolving smoothing irons, nor the material of which they are made (which may be either iron, steel, brass, or any other metal or any substance or composition found suitable for the construction of smoothing irons); neither do I claim any of my arrangements singly or apart from the objects or purposes of the said invention as herein set forth.

I claim generally the improvements in smoothing irons I have described, by the use of which I obtain either separately or in combination the advantages herein set forth; and I further specially claim, on account of their peculiar novelty,—

Firstly—The revolving or reversing of the upper and lower faces of my improved smoothing iron, by means of the small lever handle hinged to the front pivot and secured in position by a self-acting spring.

Secondly—Fixing the lamp through the near pivot to bring the burner only within the smoothing iron, and by having the receiver outside, ensuring perfect safety in burning spirits of wine or other volatile substances.

Dated this day of August, in the year of our Lord one thousand eight hundred and eighty.

GEORGE WEICHMANN.

This is the specification referred to in the annexed Letters of Registration granted to George Weichmann, this twenty-second day of September, A.D. 1880.

AUGUSTUS LOFTUS.

REPORT.

The Excelsior self-heating and revolving Smoothing Iron.

REPORT.

Sir, Sydney, 23 August, 1880.

We do ourselves the honor to state that we find no objection to the issue of Letters of Registration in favour of Mr. George Weichmann, for his invention of an "Improved self-heating and revolving Smoothing Iron," in accordance with the specification, Petition, drawings, and claim transmitted for our report under your blank cover communication of the 19th instant, No. 6,847.

We have, &c.,
GOTHER K. MANN.
EDMUND FOSBERY.

The Principal Under Secretary.

[Drawings—one sheet.]

No. 877.

[Assignment of No. 777. See Letters of Registration for 1879, page 157.]

No. 878.

[Assignment of No. 876.]

No. 879.

[Withdrawn, and subsequently registered again under another number.]

THE EXCELSIOR SELF HEATING & REVOLVING SMOOTHING IRON

Fig 1.

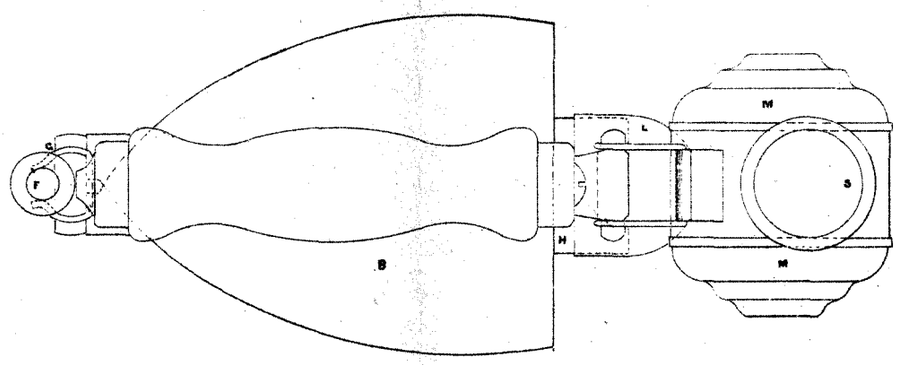

PLAN

Fig 3.

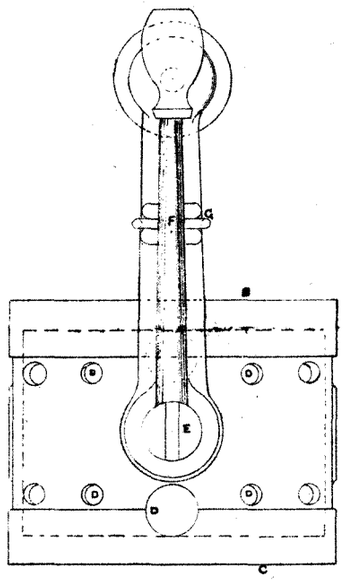

END ELEVATION

Fig 2.

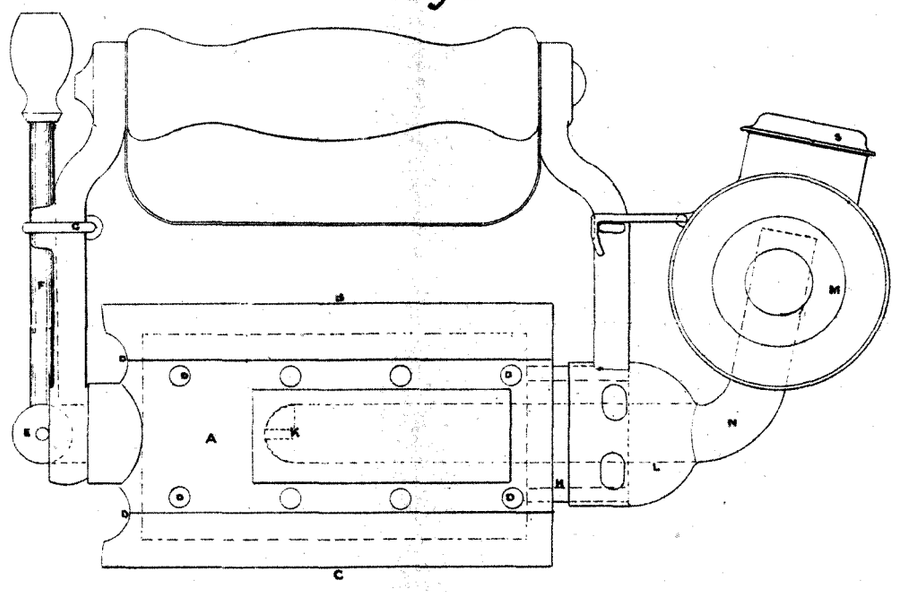

SIDE ELEVATION

Fig 4.

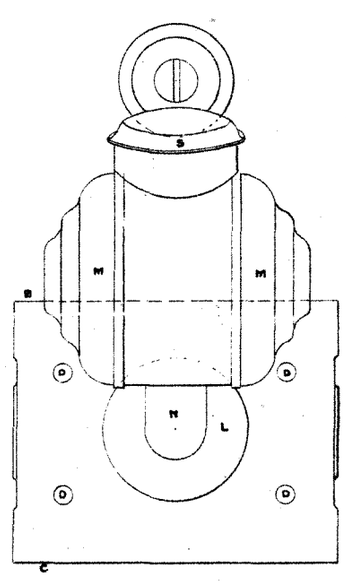

END ELEVATION

This is the Sheet of Drawings referred to in the annexed Letters of Registration granted to George Weichmann this twenty-second day of September — A.D. 1880. — (Sig. 357-) "Augustus Softus"

This is the Drawing referred to in the annexed specification

George Weichmann

PHOTO-LITHOGRAPHED AT THE GOVT. PRINTING OFFICE, SYDNEY, NEW SOUTH WALES.

A.D. 1880, 19*th October*. No. 880.

IMPROVEMENTS IN STREET TRACTION RAILWAYS.

LETTERS OF REGISTRATION to Andrew Smith Hallidie, for Improvements in propelling, hauling, and operating cars on tracks, and propelling other vehicles and boats, &c.

[Registered on the 20th day of October, 1880, in pursuance of the Act 16 Vic. No. 24.]

BY His Excellency the Right Honorable Sir Augustus William Frederick Spencer Loftus (commonly called Lord Augustus Loftus), Knight Grand Cross of the Most Honorable Order of the Bath, a Member of Her Majesty's Most Honorable Privy Council, Governor and Commander-in-Chief of the Colony of New South Wales and its Dependencies.

TO ALL TO WHOM THESE PRESENTS SHALL COME, greeting:

WHEREAS Andrew Smith Hallidie, of Sydney, New South Wales, also of the City of San Francisco, in the State of California, one of the United States of America, engineer, hath by his Petition humbly represented to me that he is the author or designer of a certain invention or improvement in manufactures, that is to say, of an invention entitled "Improvements in propelling, hauling, and operating cars on tracks, and propelling other vehicles and boats, and in the machinery and apparatus connected therewith," which is more particularly described in the specification, marked A, and the four sheets of drawings, marked B, C, D, and E respectively, which are hereunto annexed; and that he, the said Petitioner, hath deposited with the Honorable the Treasurer of the said Colony of New South Wales the sum of Twenty Pounds sterling, for defraying the expense of granting these Letters of Registration, as required by the Act of Council, sixteenth Victoria, number twenty-four; and hath humbly prayed that I would be pleased to grant Letters of Registration, whereby the exclusive enjoyment and advantage of the said invention or improvement might be secured to him for a period of fourteen years: And I, being willing to give encouragement to all inventions and improvements in the arts or manufactures which may be for the public good, and having received a report favourable to the prayer of the said Petition, from competent persons appointed by me to examine and consider the matters stated therein and to report thereon for my information, am pleased, with the advice of the Executive Council, and in exercise of the power and authority given to me by the said Act of Council, to grant, and do by these Letters of Registration grant unto the said Andrew Smith Hallidie, his executors, administrators, and assigns, the exclusive enjoyment and advantage of the said invention or improvement, for and during the term of fourteen years from the date hereof; to have, hold, and exercise unto the said Andrew Smith Hallidie, his executors, administrators, and assigns, the exclusive enjoyment and advantage thereof, for and during and unto the full end and term of fourteen years from the date of these presents next and immediately ensuing, and fully to be complete and ended: Provided always, that if the said Andrew Smith Hallidie, shall not, within three days after the granting of these Letters of Registration, register the same in the proper office in the Supreme Court, at Sydney, in the said Colony of New South Wales, then these Letters of Registration, and all advantages whatsoever hereby granted, shall cease and become void.

In witness whereof, I have hereunto set my sign manual, and have caused the present Letters of Registration to be sealed with the seal of the said Colony of New South Wales, at Government House, Sydney, in New South Wales, this nineteenth day of October, in the year of our Lord one thousand eight hundred and eighty.

[L.S.] AUGUSTUS LOFTUS.

Improvements in Street Traction Railways.

A.

SPECIFICATION of ANDREW SMITH HALLIDIE, of the city of Sydney, in the Colony of New South Wales, and of the city and county of San Francisco, in the State of California, one of the United States of America, engineer, for an invention entitled "Improvements in propelling, hauling, and operating cars on tracks, and propelling other vehicles and boats, and in the machinery and apparatus connected therewith."

THIS invention relates to a new system, mode or method of propelling cars and other land vehicles along a road, tram, or track, by means of an endless rope, cable, or chain, actuated by a stationary steam-engine or other motive-power; it also relates to the mechanism used in connection therewith, a portion of which is applicable for propelling boats and vessels in the water. The use, however, for which my system is more especially adapted is for propelling passenger and other cars through the streets of a city, whether the line of the track be level or uneven, and it is in this connection that I have represented my invention in the accompanying specification and drawings, leaving the various adaptations of which it is capable to be applied by the skilled mechanic.

The general plan of my system of propelling cars and vehicles is described as follows:—

A tube or underground tunnel of sufficient capacity to contain at proper intervals of distance grooved sheaves or pulleys, upon or under which a rope, cable, or chain may travel, is placed or constructed beneath the surface of the street, and between or alongside and parallel to or with the rails, grooves, or tram-plates or track along or upon which the car or other vehicle is to be propelled.

The tube or tunnel I provide with a narrow slot or longitudinal opening on its upper side running along its entire length. This slot or opening is sufficiently wide to admit of the passage through it and along it of a thin shank, but is not wide enough to admit the wheel tire of any ordinary carriage. Where there is a double track, two tubes are used, but where there is only a single track one tube is employed, and in the latter case two sets of sheaves or pulleys are mounted in the tube, and it will contain both parts of the travelling rope, which will run therein in opposite directions. At a suitable place on the line of the road, and connected by suitable gear to the steam or other engine or motor, are mounted the grip pulleys or other suitable devices by which the power is transmitted to the endless rope or chain (and a steel wire rope is preferred) to set it in motion.

The rope or chain after passing the grip pulley or pulleys aforesaid, passes through the tube or tunnel, resting upon the supporting sheaves or pulleys, to the lower end of the line where it passes around a horizontal sheave or pulley which is fixed to an adjusting frame for compensating for expansion and contraction of the rope, and thence it passes back through the second tube (if a second tube is used) in the same manner as previously stated, to the place of starting.

The grip pulley being set in motion transmits motion to the rope or chain, which constantly travels in the tube or tubes on the supporting sheaves during the time of working.

When the line of route is comparatively level, or is a true line between two given points, sheaves on the bottom of the tube are only required to support the travelling rope, but when the grade varies considerably, in order to keep the line of the rope parallel to the surface of the street or road, then upper sheaves will be required in the tube at the point where there is an angle or change upward in the direction of travel. Thus in such cases the rope travels over the lower sheaves and under the upper sheaves, sufficient space being left between the line of the upper and lower sheaves to permit the gripping attachment to pass between them.

The track may be laid in the ordinary way, except that when the tube is placed between the two rails of a track the cross sleepers or ties must be cut, and the cut off ends securely connected to the tube or tubes. The longitudinal slot or opening is in the upper side of the tube, but by preference it is formed on one side of the vertical centre line or axis of the tube, and not directly over the rope or sheaves, so that dirt and small stones are prevented from falling thereon.

In order to connect the car with the travelling rope so that the motion of the rope will be transmitted to the car, I attach to the car a device which I call a "gripper" or a gripping attachment, the shank of which passes down through the slot or opening in the tube and carries the gripping device at its lower end inside of the tube. This shank should by preference be made of steel, and say about 5 inches wide by $\frac{5}{8}$ of an inch in thickness, in which case the longitudinal slot in the tube need not be over seven-eighths ($\frac{7}{8}$) of an inch wide.

Ordinarily I shall employ a special car or "dummy" for carrying the gripper, to which car or "dummy" the gripper will be permanently attached. The "dummy" or gripper-carrying car will then form a permanent part of the cable road and will be provided with a coupling device by means of which other cars not provided with grippers can be connected with it, so that one "dummy" can draw one or more cars in the manner of a train. The "dummy" will only travel the length of the tube, while the attached cars can be detached at the end of the line or other point in the length of the tube and transferred to other tracks to be drawn by other means of propulsion.

The gripper consists of jaws or clamps which are arranged to seize the rope, and these jaws or clamps are operated to seize and hold or to release the rope by means of proper connections and devices which are operated by a person called the "dummy driver" who stands on the platform of the car.

This system of propulsion is especially useful for towing or propelling cars and vehicles over steep grades and inclines, I have therefore devised special means and devices for stopping and retaining the cars on steep grades or inclines.

Referring to the accompanying drawings,—Fig. 5 is a longitudinal section on an enlarged scale showing the gripper attached to the rope and passing one of the supporting pulleys.

Fig. 6 shows a cross-section of a double tube or arrangement for working up and down lengths of the running rope within the same shell or tube. This double or compound tube has two sets of sheaves mounted within it, one on each side of a vertical longitudinal partition; each compartment or division has a separate longitudinal slot through which the shank of the gripping attachment can pass, so that when the car has travelled the length of the tube in one direction, by gripping one branch of the rope, the gripper can be swung around into the opposite compartment or division so as to grip the opposite branch of the rope and be towed back again over the same track in an opposite direction. Fig. 7

Fig. 7 is a transverse section of an oval or egg-shaped single tube showing a slot-closing device, which consists of two parallel strips that close together midway across the slot by gravity, and which are opened or thrown upward and outward by a coulter-shaped device in advance of the gripper shank, so as to let the shank pass, and which close together by gravity after the shank has passed. This arrangement is shown more plainly in figures 27 and 28, sheet 3. Slot-closing plates that are kept together by springs could also be used.

Fig. 8 is a plan view of a main track and a branch track leading out thereof. The main track represented in this figure is the one represented in transverse section at figure 6, wherein the rope passes in both directions through a single tube. The lines between the tracks represent the longitudinal slot in each tubes.

Fig. 9 is a transverse section of an elliptic tube shown as being cast in three parts or portions, which are bolted or otherwise fastened together. This figure shows the bearing sheave with the rope running over it, and it also shows the foot of the gripper with its angular rope-holding pulleys and the rope passing between the pulleys. The relative position of lower pulley rope, gripper, foot, and shank passing through the slot is well shown in this figure.

Fig. 10 is a longitudinal view of a section of the tube, showing the end flanges for connecting the ends of two sections and the flanges for receiving the ends of the transverse beams or ties of the road formation.

Figs. 11 and 12 show transverse sections of the tube with two sets of rope supporting pulleys mounted inside of it, and also showing the cross ties, stringer pieces and rails of the track, and the wheels and axle of the car resting upon the track; they also show the gripper shank passing down through the slot in the tube and the gripper foot with its rope-holding rollers. In figure 12 the foot of the gripper is made T-shaped, and a double arrangement of the gripper jaws are shown, one set of grippers being above each rope, but in figure 11 the foot of the gripper is L-shaped, and a single set of grippers is used. In this latter case the gripper must be turned around at the end of the track when it is desired to drop one rope and seize another in the same tube. I therefore mount the gripper, in this case, in a turn-table in the floor of the car, as shown at figure 22, so that the jaws can be easily turned to either side.

Figs. 13 and 16 are plan views of the tube with two sets of pulleys, having a portion broken away to show the lines of ropes and pulley shaft with its bearings.

Fig. 14 shows an arrangement of the wheels mounted on independent axles, the dummy floor and the gripper screw, gripper shank and gripper rollers supported in position through a hole in the dummy floor.

Fig. 15, sheet 2, shows a side elevation and plan view of the depending pulley attached to the sliding box.

Figs. 20 and 21, sheet 2, show side or horizontal pulleys for changing the direction of the rope on a horizontal plane.

Figs. 17 and 18 show the construction of the longitudinal slot in the tube.

Fig. 19 shows the gripper and pulley arrangements for passing curves in the track.

Fig. 23 is a perspective view of a section of the tube and track.

Figs. 24, 25, and 26, sheet 3, show an automatic switch, the object of which is to enable the passage of one car to set the switch rail so that the following car will remain and pass the switch on the main track.

Figs. 29, 30, and 31, same sheet, show a construction in which the two tubes are placed between the tracks, each tube containing a double set of pulleys, one of which sets of pulleys carries a reserve rope to be used in case of accident to the main rope. Figure 30 also shows an arrangement of a sewer below the tracks.

Figs. 32 and 33, same sheet, show a brake and its operating lever. Figs. 34, 35, 36, 37, and 38, same sheet, show the different parts of what I call a roller grip, the main feature of which is the employment of rollers for seizing the rope, and a brake or brakes applied to the rollers to retard their rotation. Figs. 39, 40, 41, 42, 43, 44, 45, 46, 47, and 48, same sheet, show the construction of my L-shaped grip, with angular pulleys for holding the rope and sliding gripper jaws for seizing and holding the rope. Figs. 49, 50, and 51 show the depending pulley at the foot of an incline, to keep the rope from jumping up through the slot. Fig. 52 shows the diagonal switch. Fig. 53 shows a grip having two sets of opposing vertical rollers for gripping and carrying the rope. Figs. 54, 55, and 56 show a grip with rope-carrying pulleys with solid block above for braking the pulleys and gripping the rope.

The size and shape of the underground tube or tunnel A is immaterial, but the greatest amount of strength is obtained in a round or oval tube, and for that reason I prefer these shapes. Its location with reference to the track may be between the two rails of each track or just outside of them. The best plan is to place or construct it between the two rails of each track, as shown at fig. 4, sheet 1. Each rope-supporting pulley B is mounted on an axle which bears in upright standards inside the tube. When the foot of the gripper is attached to the gripper shank so as to form an L, as shown at figs. 4, 6, and 9, of sheet 1, figs. 11, 12, 14, and 19 of sheet 2, and figs. 44, 45, and 48 of sheet 3, the longitudinal slot C is made on one side of the plane in which the pulleys rotate, but when a gripper constructed as shown at figs. 36, 37, and 38, sheet 3, and figs. 53 and 54, sheet 4, is used, the slot will be made nearly perpendicularly above the pulleys.

When the tube is placed between the rails of the track as shown at figs. 3 and 4, sheet 1, and figs. 11, 12, and 23 of sheet 2, the cross ties must be cut and their ends fastened to flanges D on the exterior of the tube, but when the tubes are placed between the tracks as shown at fig. 30, sheet 3, the cross ties E are not interfered with, but their inner ends can rest upon and be bolted to the ends of the cross timber F, which extends across between the tracks and forms the base of the tube structure, thus practically forming a continuous cross tie. Underneath the cross timber F, a sewer pipe, G, is placed, and at intervals between the cross timbers the bottom of the tube A on each side is connected with the sewer so as to drain the tubes of water and permit of their being flushed out when necessary.

The tubes are constructed by securing uprights H to the timber F, and connecting them near their puper ends by means of a rod, I, to guard against lateral strain.

When the level of the track changes from a horizontal to an inclined plane, retaining pulleys must be used to keep the rope in its proper relation to the top and bottom of the tube. When the change is upward an overhead pulley J, fig. 3, sheet 1, is used. This pulley prevents the rope from striking the top of the tube or being drawn up through the slot when the strain is on the rope. When the change is downward, the pulley K supports the rope as it passes over the brow of the hill. Instead

Improvements in Street Traction Railways.

Instead of securing the overhead or depending pulley directly to the top of the tube, I attach it to a block, as shown at fig. 15, sheet 2, and this block I slide into an opening in the top of the tube with the pulley hanging into the tube. This enables me to remove one pulley and substitute another one for it in a very short time, so that the operation of the road is not interfered with. I prefer also to attach hanging sides to the block on each side of the pulley, so that the pulley is partially boxed in and thereby protected.

In making curves in the track, I arrange a series of pulleys, L, L, L, figs. 20 and 21, sheet 2, in a circular form on the inside wall of the tube, around which the rope will move upon the pulleys.

A contrivance which I have found useful in some cases and in certain situations where it is required to increase the radius of the circle around which the rope has to bend, is by employing an oval form or body, shown in fig. 28, sheet 3, around which on the periphery thereof is placed a number of friction wheels, connected together either by links or mounted upon a flexible chain, frame, or band, the running rope in turn passing over or partially around this series of independent rollers which form an anti-friction surface, the curve of which may be varied by the extension of the major axis of the oval or ellipse, and this device may be applied either at the junction of a down angle or other place where a pulley of sufficiently large diameter could not easily be introduced. On a larger scale it may be applied horizontally at the upper ends of the tubes where the rope emerges therefrom, and where from the distance apart of the tubes it may be desired to introduce a horizontal pulley or drum in closer proximity to the ends thereof than could be effected by a circular drum or sheave, without the addition of angle pulleys and other contrivances.

The gripper shown in position in fig. 14, sheet 2, is an L-shaped gripper, and it is shown in detail at figs. 42, 44, 45, 46, 47, and 48, of sheet 3.

This gripper, as shown at fig. 14, sheet 2, consists of a large screw, M, with a hand wheel, N, at its upper end. The upper end of the shank O is attached to the lower end of this screw, while the gripping jaws P and rope-carrying pulleys Q are secured to a block, R, which is secured to the lower end of the shank O, the attachment being made near one end of the block, so that in connection with the shank it will form a side extension or L-shaped foot.

To the underside of this foot or block I attach two or more pairs of pulleys, Q Q, in two sliding frames so that they can be moved towards or from each other for the purpose of clasping and releasing the rope or cable as circumstances may require. Between the pairs of pulleys and in the same frame I place the solid or positive jaws P. A vertical slide, T, moves in a groove in the shank, and its upper end is connected with a screw, U, which turns inside of the large screw M, and to the upper end of which is a hand wheel, V. To the lower end of the slide a wedge, W, is secured, which moves between the sliding frames, so that when the slide T and wedge are raised by means of the screw V^1, the sliding frames are closed together and the jaws and pulleys are clamped upon the rope, while the downward movement of the wedge separates the jaws and pulleys and allows the rope to drop. Flanges at the corners of the wedge moving in corresponding recesses in the frames serve to connect the movement of the frames with the movement of the wedge.

The pulleys Q are mounted on journals at an angle to each other, their under faces forming two inclined sides which converge towards their upper edges, between which the rope or cable is seized. This construction enables me to drop the cable by separating the pulleys sufficiently and to pick it up again by lowering the foot or block R until the pulleys drop over the rope sufficiently to allow them to be closed upon it. When the rope has been caught it can be lifted to the proper position by means of the screws M V^1, or by other device supplied for the purpose.

This feature is of the utmost importance in the construction of a gripper for this class of work, because it often happens that a car must stand in a fixed position on the track for a considerable time, in which case if the pulleys continued holding the cable, the speed at which the cable travels would cause the journals to heat, and thus not only destroy the pulleys but injure the rope, but by providing the combination of devices above described, I entirely overcome this difficulty by enabling the attendant or operator to release the cable entirely from the grippers when desired, and with equal facility to pick it up again when the car is ready to proceed.

In order to provide a convenient and desirable amount of elasticity so that the pulleys shall act as "feelers" in picking up the rope, and to avoid accident by a too sudden and powerful compressing of the pulleys upon the rope or cable, I employ spiral or other springs (shown at fig. 42, sheet 3), for retaining the pulleys at an angular position, so that the compression of the pulleys upon the rope will compress the springs and render their pressure elastic. These pulleys therefore serve to pick up and grip the rope when it is desired to move the car, but in order to give a positive gripping power such as will be absolutely necessary when the car is to be drawn or propelled over a steep grade, I provide the positive or fixed jaws P so that when the pulleys have been compressed tightly on the rope the positive jaws will be brought into action, so as to grip it more powerfully, thus ensuring a holding power upon the rope that will be sufficient in all cases. I prefer to place the positive jaws between the pulleys, as they will thus be in the most favourable position for seizing the rope when the pulleys are forced together.

The screw is mounted in a tripod or other frame, which is fastened firmly to the floor of the car or dummy and the screw passes through a hole in the floor so that the shank can pass through the slot while the pulleys, grippers, and wedge are inside of the tube as shown at figs. 11 and 12, sheet 2.

The positive grippers should have removable faces or shoes, so that when one set of shoes or faces are worn out a new set can be substituted for them; soft metal faces will be the best, as they create less wear on the rope.

Obvious changes in the construction of this gripper would be to have one stationary and one sliding frame on the block, and arravge the wedge to move the sliding frame against the stationary frame and clamp the rope between them, also fixing the journals of the angular pulleys in arms on the sliding blocks, but these would be mere modifications of the above described arrangement.

When this gripper is used in connection with a tube in which both lengths of the rope travel in opposite directions in the tube, I mount it on a turn-table, Z, fig. 22, sheet 2. This avoids the necessity of turning the car around at the end of the line.

Another style of grip, which I designate a lever grip, is represented at figs. 53 and 54, sheet 4. In this grip no positive jaws are used, but the rope is held and gripped between two vertically adjusted pairs of pulleys, *a a*, and a brake, *b*, is arranged to press upon large hubs on the sides of the rollers, and by retarding

retarding their rotation cause them to grip the rope between them. The brakes are applied by means of a lever, *d*. The gripper frame consists of a thin piece of metal which is bent so that its middle portion forms an arc or segment of a circle, while its ends are bent downward so as to form the gripper shank and grip frame all in one piece. The two parts which form the grip frame are vertical and parallel. The lower grip rollers are secured in a vertical position on journals on the opposite ends of a horizontal bar, *e*, while the upper rollers are mounted in a similar manner on the opposite ends of a similar bar, e^1. The ends of these two bars clasp the vertical plates of the frame and move up and down between them like slides. The rollers have enlarged hubs on one side against which the brake bars press. A brake bar, *f*, is mounted underneath the hubs of the lower rollers, and another, f^1, is mounted above the hubs of the upper rollers, and the ends of these bars clasp the vertical frame plates and move up and down like the bars $e\ e^1$. The lower end of the lever *d* is widened and one corner is connected by a link, *g*, with the upper brake block, while its opposite corner is connected by a link, g^1, with the lower brake bar, so that by moving the lever in one direction the brake bars are forced against the hubs of the rollers in opposite directions, and the rollers are clamped upon the rope. An opposite motion of the lever separates the brake blocks and releases the rollers, so that they rotate, and the rope travels between them. The upper semi-circular portion of the frame has teeth or notches formed on it, and a hand-operated pawl, *n*, is attached to the lever, so that when the brakes are pressed upon the rollers the pawl is dropped into the notch and the parts held in place.

This gripper is hung through the floor of the car or dummy so that the circular portion is above the floor while the two downward extensions of the frame form both the shank and gripper frame. The extensions inside the tube are provided with vertical rope-bearing rollers, *i i*, which keep the rope away from the frame plates, and horizontal rollers, *j*, which protect the frame plates from striking the tube.

A variation of this style of gripper is shown at figs. 54, 55, and 56, sheet 4, wherein two or more vertical pulleys are mounted on knee-shaped blocks *k*, which are pivoted at one end to the lower ends of the frame plates. The inner ends of these knee-shaped blocks are separately attached to the opposite corners of a slide, *l*, which is raised and lowered by the lever *d*, the slide moving between the vertical edges of the frame plates. These rollers form the lower jaw of the gripper, and also serve to hold and carry the rope when it is not desired to disconnect from it entirely. The upper jaw *m* is a solid block which is also connected with the lever *d* by a pivot on the side opposite that to which the slide *l* is attached, so that when the lever is thrown over in one direction the rope is gripped between the rope-supporting rollers and the solid block *m*. On the frame-plates, just below the line of the rope-supporting pulleys, I secure small cones, *n n*, so that when the knee-blocks are lowered far enough the rollers will be carried below the centres of the cones or inclines and the cones will throw the rope outward and free from the pulleys. When the rope is supported by the pulleys so as to move freely through the grip it does not touch the cones or inclines, therefore when it is desired to simply loosen the grip upon the rope I move the lever slightly so as to separate the jaws and allow the rope to travel on the pulleys; but when it is desired to drop the rope altogether I lower the jaws far enough to let the inclines *n* throw it entirely free from the gripper. The rack against which the lever *d* moves is represented in this case as being horizontal instead of curved.

A still further variation of the roller grip is shown at figs. 36, 37, and 38, sheet 3. Fig. 16 shows the gripper, which is represented more clearly at fig. 38, attached underneath the front part of a car. In this device the pulleys are clamped upon the rope by means of lever brakes *p p*. The brakes are applied directly opposite the frictional contact of the pulleys against the rope and the pressure is applied by means of chains *q*, which connect the free end of the levers with a vertical shaft, upon and around which they are wound by power applied to a hand-wheel in the usual way of applying power to brakes. Figures 36 and 37, same sheet, represent the power applied to the brake lever by means of screws and cranks.

Any of these various gripping devices can be used for connecting the car or dummy with the travelling rope.

Figs. 27 and 28, sheet 3, represent the slot-closers. It consists of a series of rails, *r*, which are constructed with a rib or toe-like projection, *t*, which fits in a longitudinal recess in the edge plate of the slot. A continuous series of independent rails of this construction is placed on each side of the slot, so that the ribs on opposite sides will fall together and meet half-way across the slot. In this position they will rest against each other and form a two-part bridge that entirely covers the slot and prevents the entrance of dirt on the wheels of vehicles. The upper part of each rail being heavier than the lower part will cause them to fall together when they are raised to let the shank of the gripper pass between them. To facilitate the opening of these rails in advance of the shank, I attach a wedge or coulter, a^1, to the shank, so that it will project in front of the shank and lift the rails apart so that the shank can pass between them, when they immediately fall together again.

In order to pass a grip-carrying car or dummy from one track to another, I connect the two tracks by means of a diagonal switch track, and between the rails of this diagonal track I construct a tube or passage for the gripper to move in while the car is passing from one track to the other. This tube has a slot for the shank to move in, but it has no pulleys inside of it, neither does any rope pass through it. This arrangement is shown at fig. 52, sheet 4.

Where the switch slot joins the slot in the main tube an unusually wide opening will necessarily be made, in which objects are liable to enter unless the opening is protected. I therefore employ a curved covering plate, b^1, which covers the widest part of the slot and extends a short distance over the switch slot. A spring, c^1, keeps the plate in its place. When the gripper shank starts through the switch slot, it passes this plate back, and after the shank has passed beyond it the spring returns it to its covering position. Figures 24, 25, and 26, sheet 3, represent an arrangement of a switch rail, by which the passage of a car or dummy over the switch track sets the switch automatically, so that the following car will pass it on the main track. This device is used to save time in operating the switch rail when the car which follows the dummy passes from the cable means of propulsion to another track, or an extension of the same track, where horses or other propelling power is used. The dummy then passes through the switch in advance of the car and automatically sets the switch rail, so that the car will follow on the same track past the switch. In this case the wide end of the tongue rail is secured firmly to the middle of a cross-bar, d^1, which lies under the switch plate, and as this cross-bar is moved the tongue is thrown to one side or the other of the switch plate. The movements of the cross-bar are produced by the draw-rods $e^2\ e^2$ secured to the ends of the cross-bar

and

and passing beneath and in line with the rails, one under the rail of the main track and the other under the rail of the switch. These draw-rods are protected by tubes f^2 f^2 that are fixed to the undersides of the rails, and serve to prevent any clogging of the rods and mechanism by the accumulation of dirt around them. At the end of each tube f^2 is a fixed block, g, with an inclined face and a slot through which the rod passes. Dogs n^1 are secured to the ends of the rods by a nut and washer, and they are held against the face of the blocks g^1 by the action of buffer springs k^1 on the ends of the rods. These dogs have an inclined face that rests against and slides upon the face of the block g^1, and a rounded head projects through a slot in the rail in line with the tread of the wheels, so that the depression of the dogs by the weight of the cars causes them to slide upon the inclined faces of the blocks and draw upon the rods e^2 e^2 which throws the tongue rail to the opposite side.

On steep inclines, powerful brakes must be used in order to ensure the stoppage of the car in case of accident or necessity. Where the incline is very steep, I use the skid arrangement shown at fig. 1, sheet 1. This brake is applied to the track, and the entire weight of the car can be put upon it if necessary. This is a powerful brake, but for ordinary grades the device shown at figs. 32 and 33, sheet 3, is used. In this arrangement the brakes are applied by a hand lever, l^1, which is connected with the brake beams by means of the links m^1, progressive levers n^1, and rods o^1, so that the movement of the lever operates both brake-beams simultaneously and applies the brake power in opposite directions. The hand lever works alongside of a rack or toothed segment, with the teeth of which a hand-operated pawl engages to hold the brakes against the wheels.

In countries where snow and ice prevail in the winter season, it will be necessary to keep the atmosphere inside of the tube at a temperature that will prevent the formation of ice and the accumulation of snow in the tube. To do this I will construct a furnace at some point in the length of the road near or adjacent to the tube, and from this furnace I will lead a pipe or pipes so that it or they can be connected by branch pipes with the tube at various points or intervals. During cold weather I will maintain a fire in the furnace, and by means of a fan blower or other air-forcing apparatus, I will drive heated air through the pipes into the tube, or a hot air pipe or steam pipe could be run directly through the tube from end to end so as to heat the air in the tube.

Having thus described my improved railroad system, what I claim and desire to secure by Letters Patent is—

First—The improvements in operating the system of tramway or road car traction herein described, and in the machinery and apparatus connected therewith.

Secondly—The mode of hauling or propelling street cars or carriages by means of a constantly travelling endless rope or cable running in a tube (or tubes) as herein described, and which rope is kept in position at intervals by sheaves below and above, as herein set forth, each tube having a longitudinal slot or opening on its upper surface, and having suitable openings at convenient distances to enable the sheaves or the gripper to be withdrawn, all substantially as herein described and set forth.

Thirdly—The combination of an underground slotted tube containing a running rope carried upon sheaves, with a car or dummy having an attached gripper, said gripper consisting of gripping jaws or rollers inside of the tube, which are connected with an operating mechanism upon the car or body of the dummy by a shank which moves in the slot in the tube, substantially as specified.

Fourthly—The construction and mode of working the L-shaped gripper substantially as described.

Fifthly—The arrangement of vertical pulleys adapted to receive the running rope by a lateral movement of the grip in combination with a brake or brakes connected with a mechanism operated from the car platform, whereby the brakes are applied against the peripheries of the wheels to retard their rotation when it is desired to seize the rope, substantially as herein set forth.

Sixthly—The combination of pulleys for supporting the running rope and for forming the under jaw of a grip, with a solid block for clamping the rope upon the pulleys, and the mechanism connected therewith, substantially as described.

Seventhly—The arrangement and construction of anti-friction sheaves working around an oval form or body for the purpose of maintaining the rope in position at brows or changes of angle and in other situations, as herein described.

Eighthly—The arrangement of hinged bars working on knife-edges and closing by gravitation, for the purpose of keeping the slot closed when the shank of the gripper is not passing through the slot, as herein set forth.

Ninthly—Connecting the two tubes by an oblique tunnel with slot in combination with the switch track for transferring cars carrying grippers from one track to another, substantially as described.

Tenthly—An automatic switch rail connected with a cross-head and operated by the pressure of the car-wheel through the medium of inclined faces operating on draw-rods connected with the cross-head, substantially as described.

Eleventhly—The lever brake herein described arranged to set the brakes against the car wheels in opposite directions.

Twelfthly—The arrangement of a furnace and heating pipes so as to heat the air in the underground tube or tunnel, substantially as described.

In witness whereof, I, the said Andrew Smith Hallidie, have hereunto set my hand and seal.

1 Bridge-street Chambers, Sydney. ANDREW SMITH HALLIDIE.

This is the specification, marked A, referred to in the annexed Letters of Registration granted to Andrew Smith Hallidie, this nineteenth day of October, A.D. 1880.

AUGUSTUS LOFTUS.

Improvements in Street Traction Railways.

REPORTS.

Sir, Sydney, 4 August, 1880.

We do ourselves the honor to report, in reply to your blank cover communication of the 12th July, No. 80/5,566, that on examination of Mr. A. S. Hallidie's application for Letters of Registration "of an invention for improvements in Street Traction Railways," we find that so far as relates to its use in this Colony the invention is novel, and the claim to provisional registration might have been granted, but for the fact that the whole of the details as adopted by the Clay-street Hill Railway Co., in San Francisco, in August, 1873, were published in the *Engineer* (London), October 10th, 1879; it is therefore a question to be decided by the Crown Law Officers, if, under the circumstances, Mr. Hallidie's claim to protection should be admitted.

We have, &c.,
JOHN WHITTON.
WILLIAM C. BENNETT.

The Principal Under Secretary.

Sir, Sydney, 8 September, 1880.

The Honorable the Attorney General having reported upon the question raised in our letter of the 4th ultimo that no legal objection exists to the granting of Letters of Registration on Mr. Hallidie's application, we have the honor to state that we now see no objection to the prayer of the Petition being granted.

We have, &c.,
JOHN WHITTON.
WILLIAM C. BENNETT.

The Principal Under Secretary.

[Drawings—four sheets.]

Fig. 1.

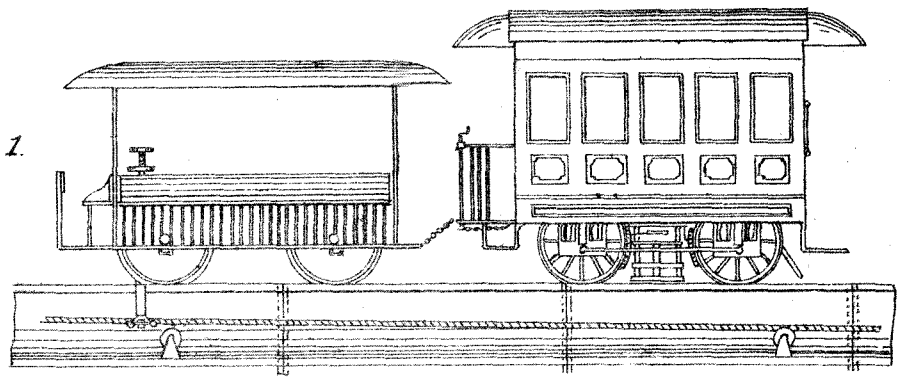

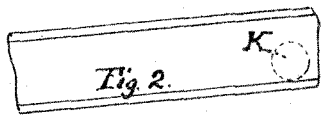

Fig. 2.

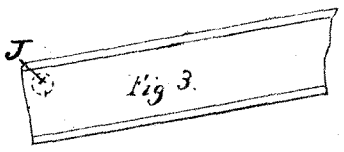

Fig 3.

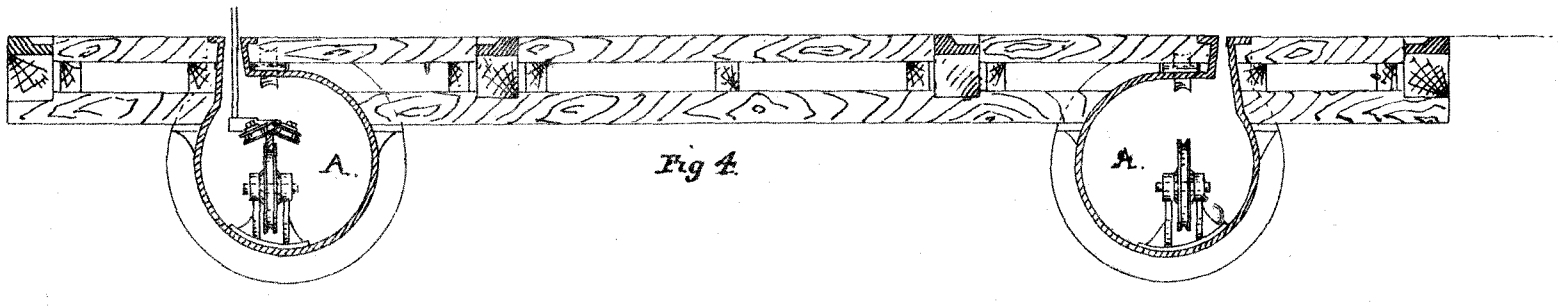

Fig 4.

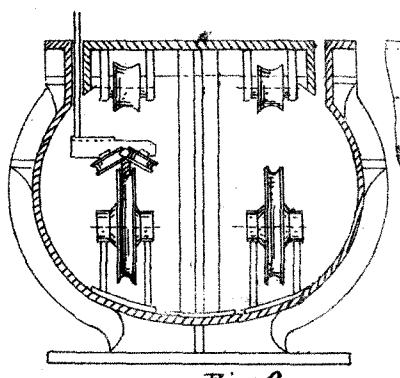

Fig 6

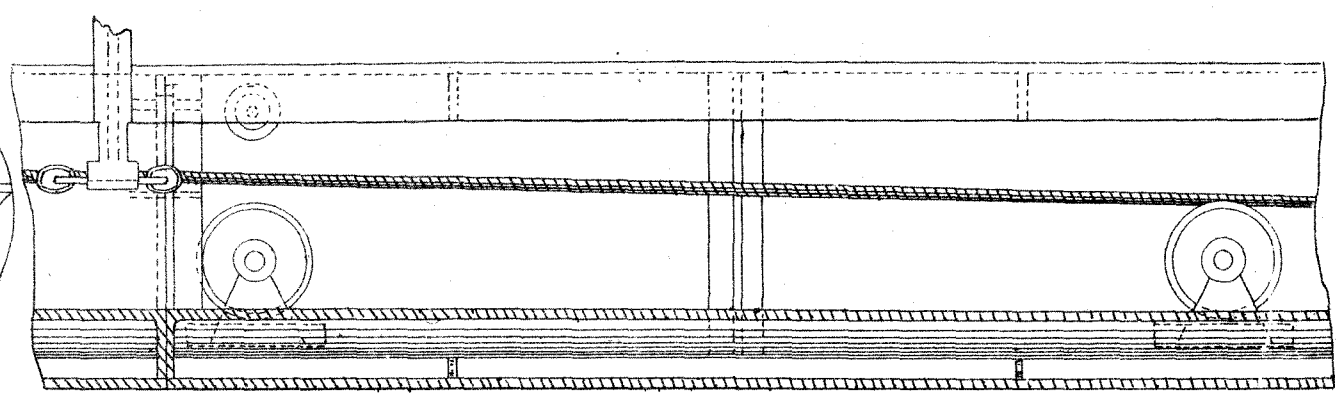

Fig. 5.

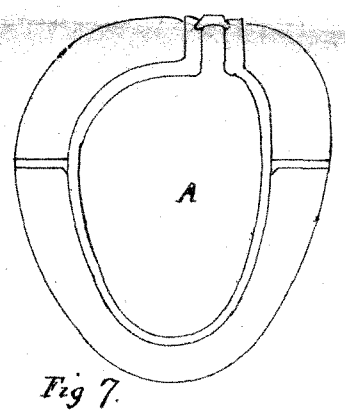

Fig 7.

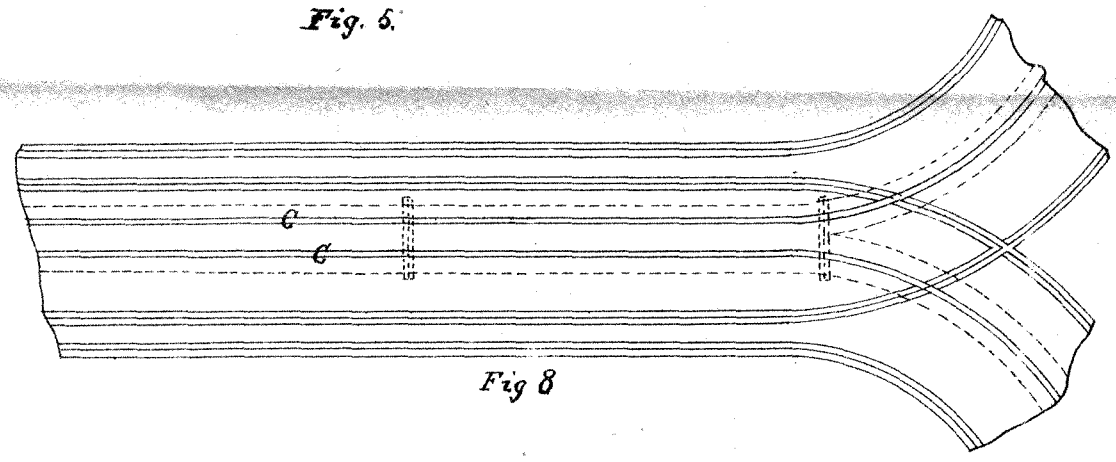

Fig 8

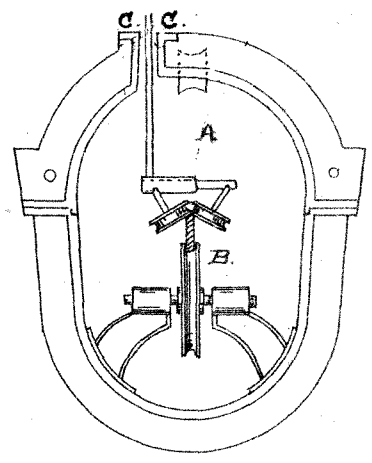

Fig 9.

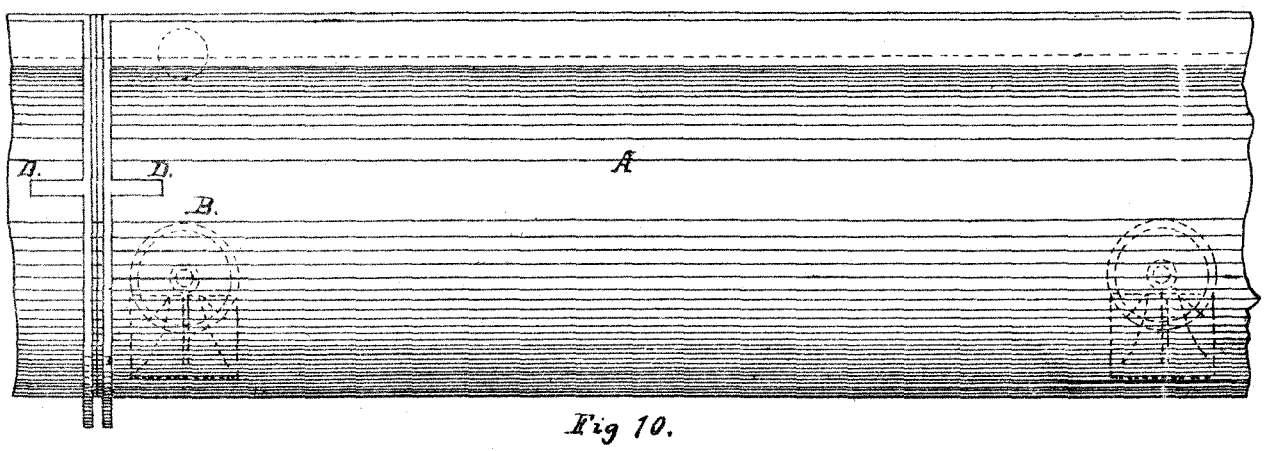

Fig 10.

"This is the Sheet of Drawings marked "B" referred to in the annexed Letters of Registration granted to Andrew Smith Hallidie this nineteenth day of October A.D. 1880

(Sig. 357-)

Augustus Loftus

PHOTO-LITHOGRAPHED AT THE GOVT. PRINTING OFFICE,
SYDNEY, NEW SOUTH WALES.

C.

[880]

Fig 11.

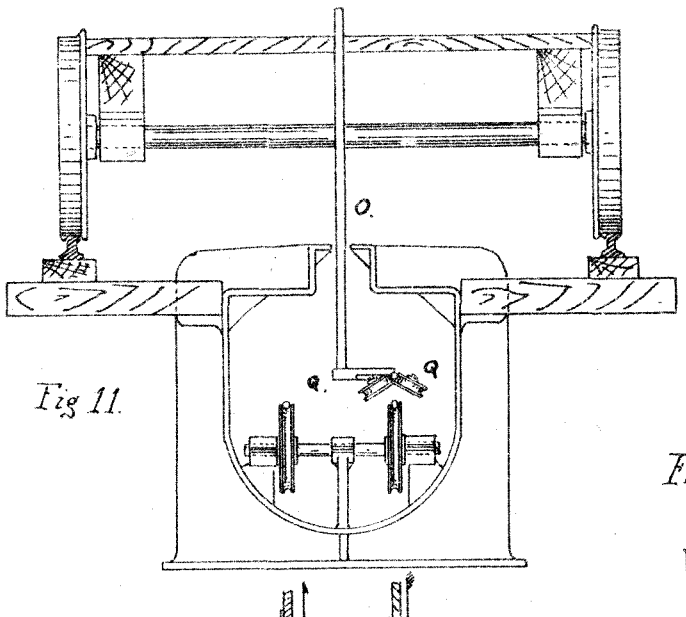

Fig 12.

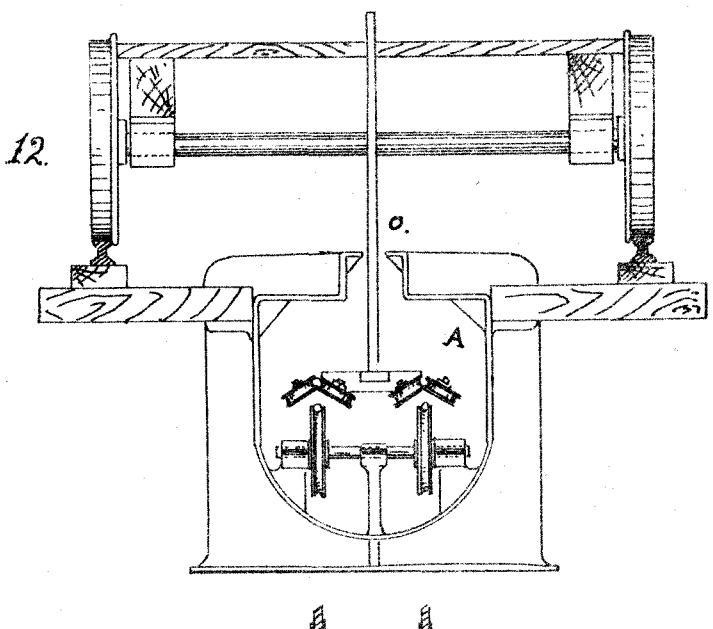

Fig 14.

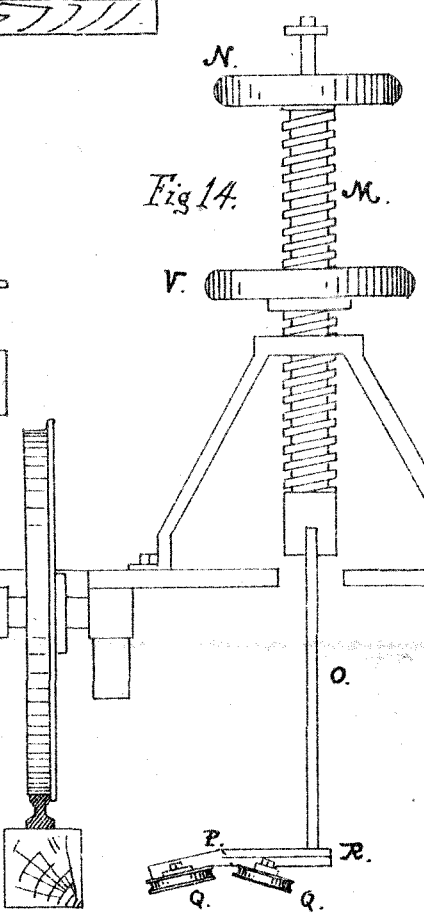

Fig 16

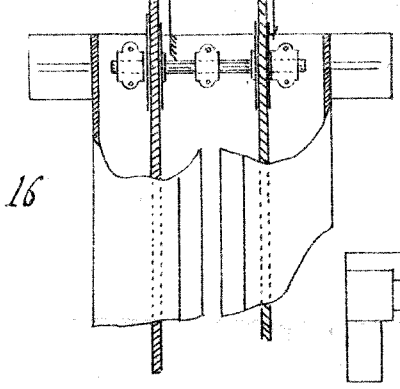

Fig 13.

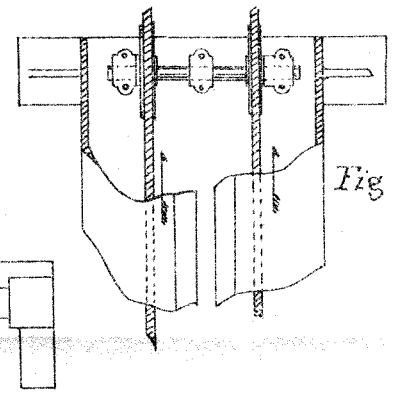

Fig 17.

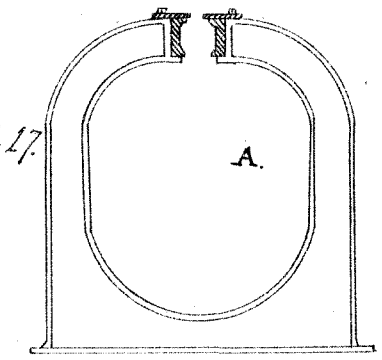

Fig 18.

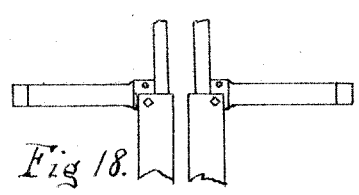

Fig 19.

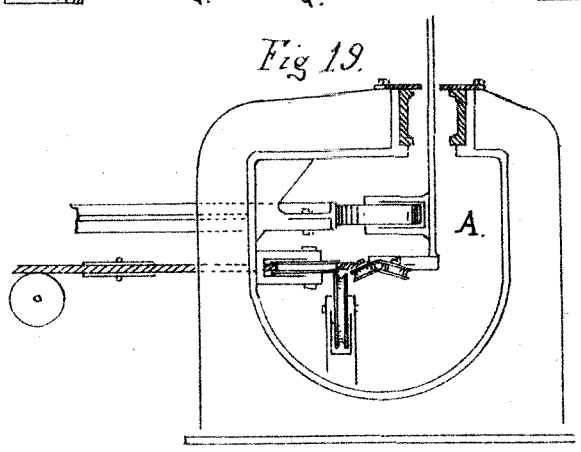

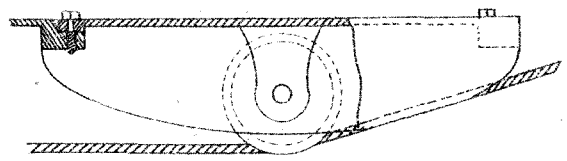

Fig 15.

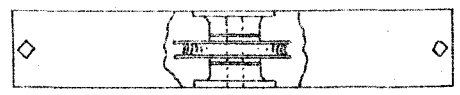

Fig 20.

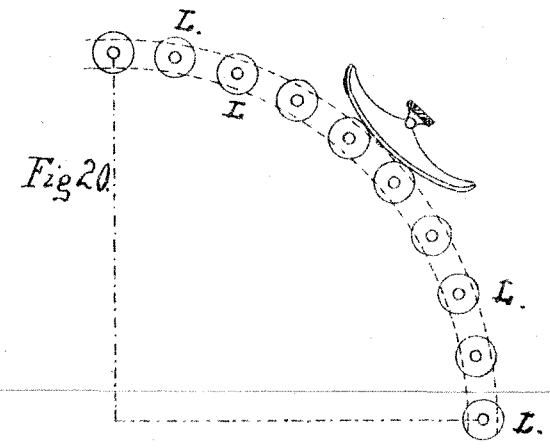

Fig 21.

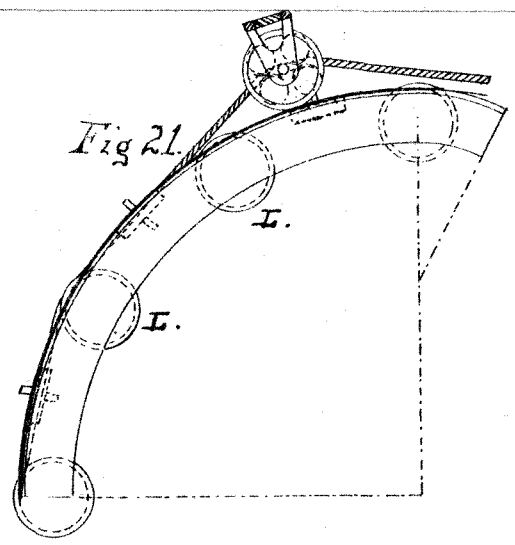

Fig 22.

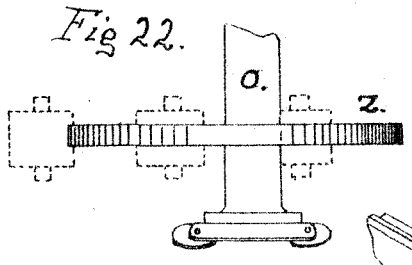

Fig 23.

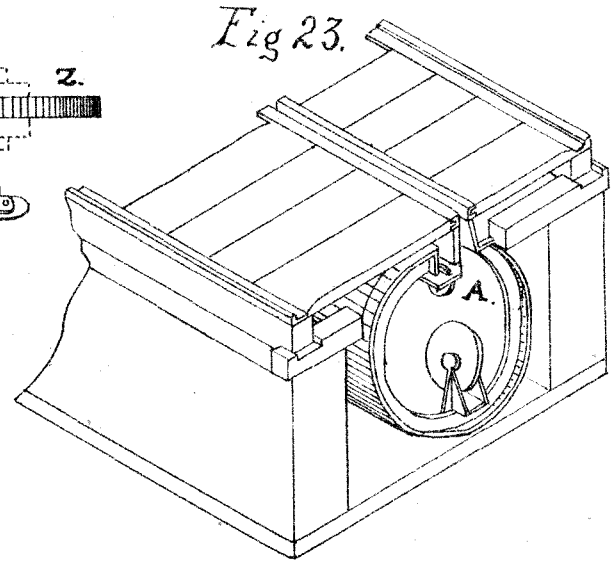

This is the Sheet of Drawings marked "C" referred to in the annexed Letters of Registration granted to Andrew Smith Hallidie this fourteenth day of October A.D. 1880.

(Sig. 357-)

Augustus Loftus.

PHOTO-LITHOGRAPHED AT THE GOVT. PRINTING OFFICE, SYDNEY, NEW SOUTH WALES.

Fig. 24.

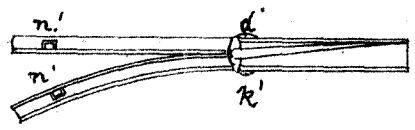

Fig. 25.

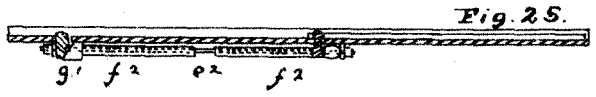

Fig. 26.

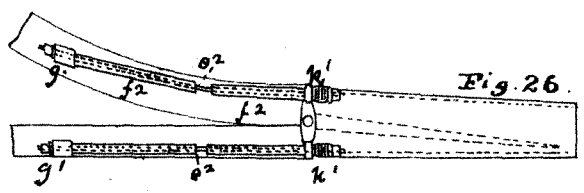

Fig. 27.

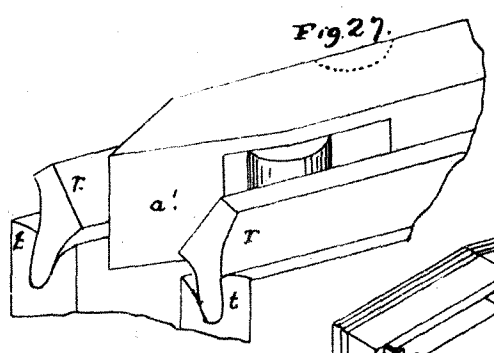

Fig. 28.

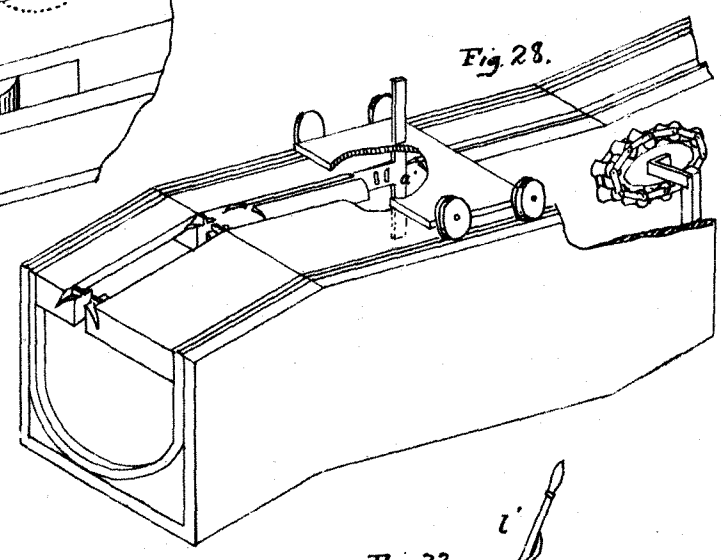

Fig. 29.

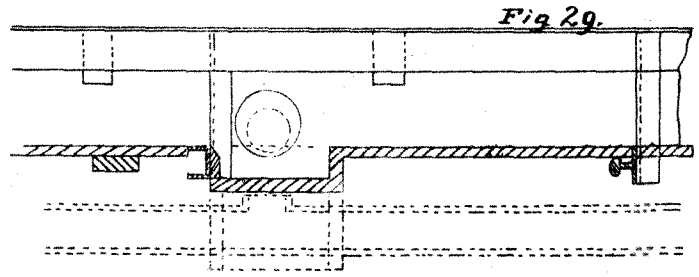

Fig. 30.

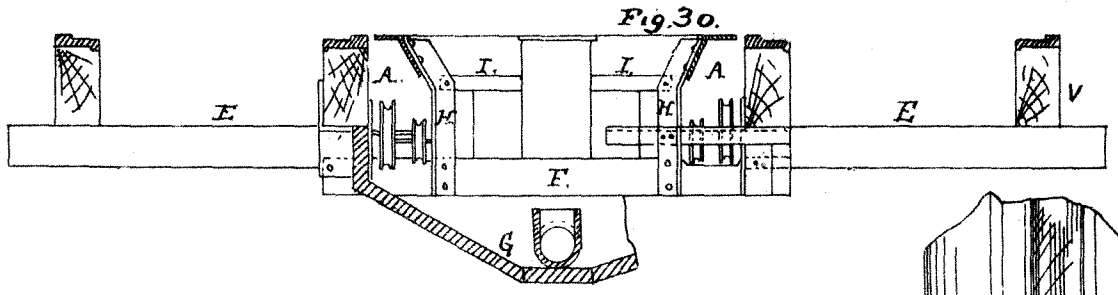

Fig. 31.

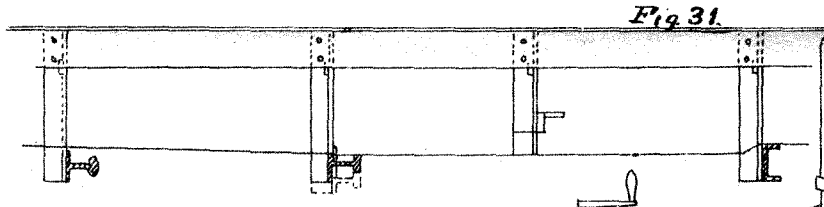

Fig. 32.

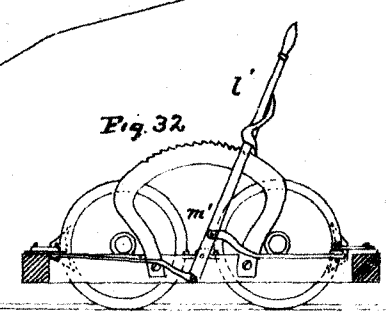

Fig. 33.

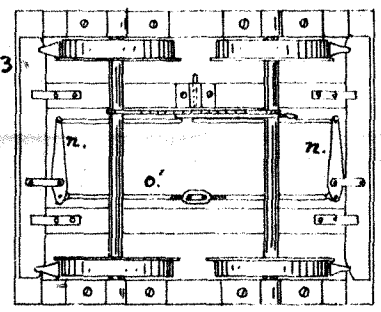

Fig. 34.

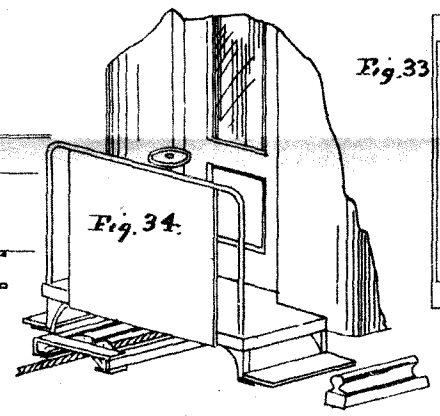

Fig. 35.

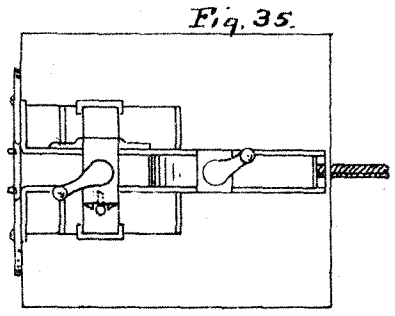

Fig. 36.

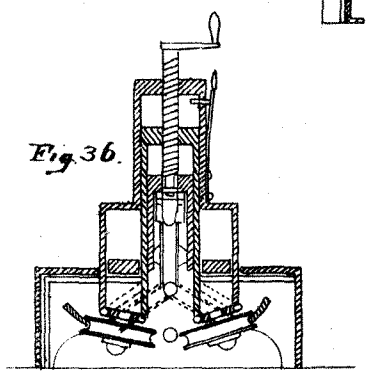

Fig. 37.

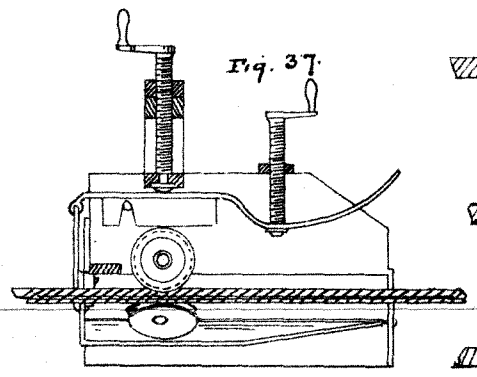

Fig. 38.

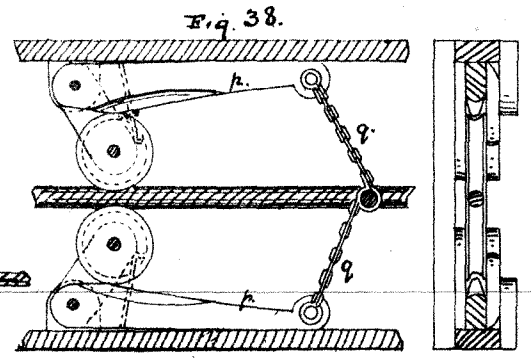

Fig. 39.

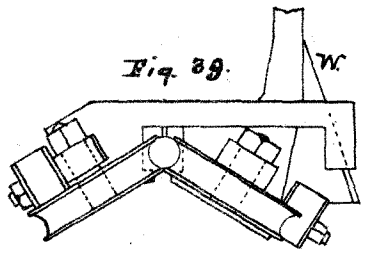

Fig. 40.

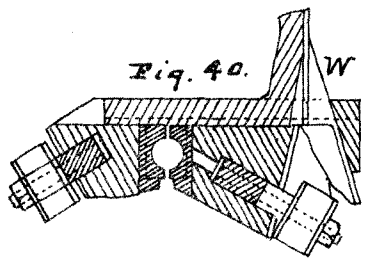

Fig. 41.

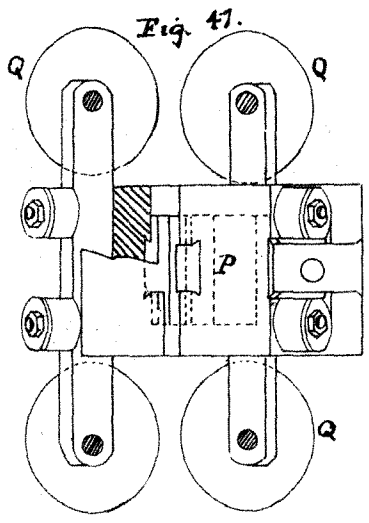

Fig. 42.

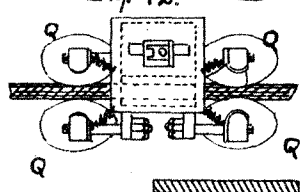

Fig. 43.

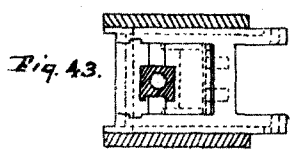

Fig. 44.

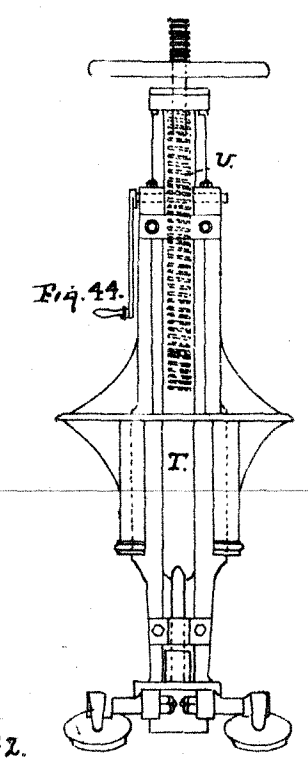

Fig. 45.

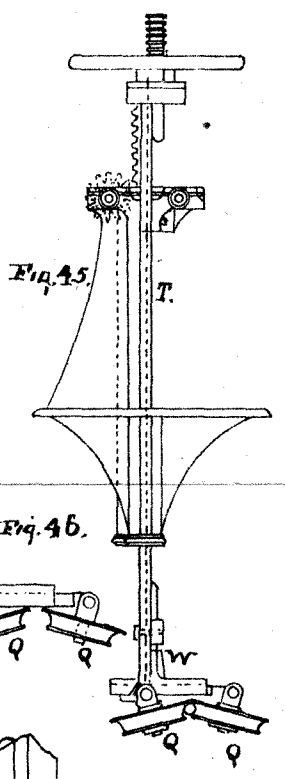

Fig. 46.

Fig. 47.

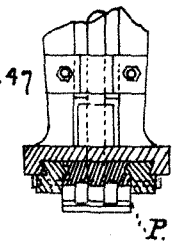

Fig. 48.

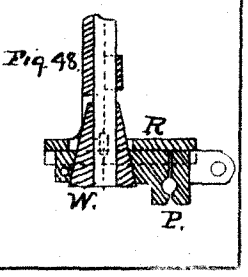

This is the Sheet of Drawings marked "D" referred to in the annexed Letters of Registration granted to Andrew Smith Hallidie this nineteenth day of October A.D. 1880.

(Sig. 357-)

Augustus Loftus.

PHOTO-LITHOGRAPHED AT THE GOVT. PRINTING OFFICE,
SYDNEY, NEW SOUTH WALES.

Fig. 49.

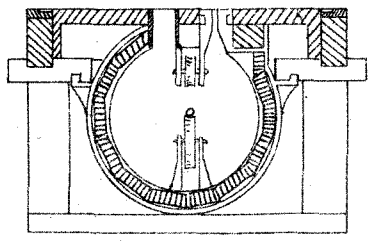

Fig. 50.

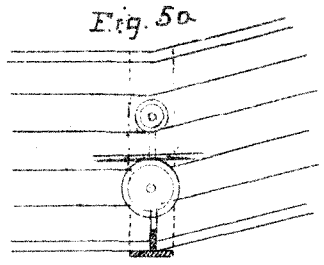

Fig. 51.

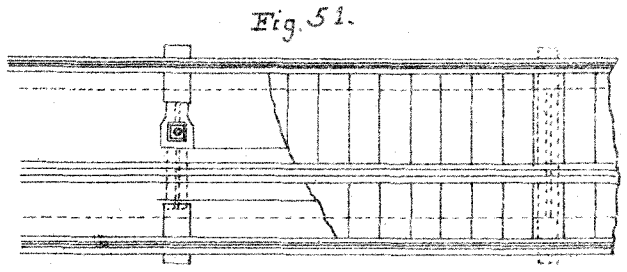

Fig. 52.

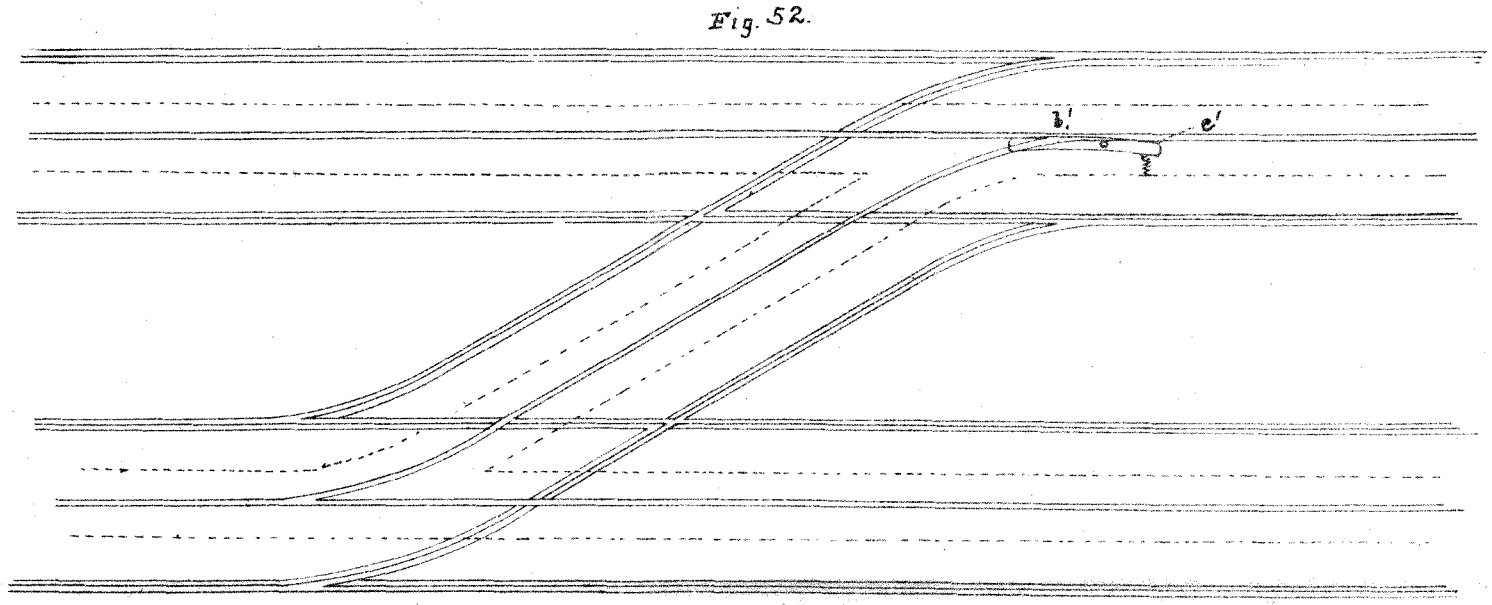

Fig. 53.

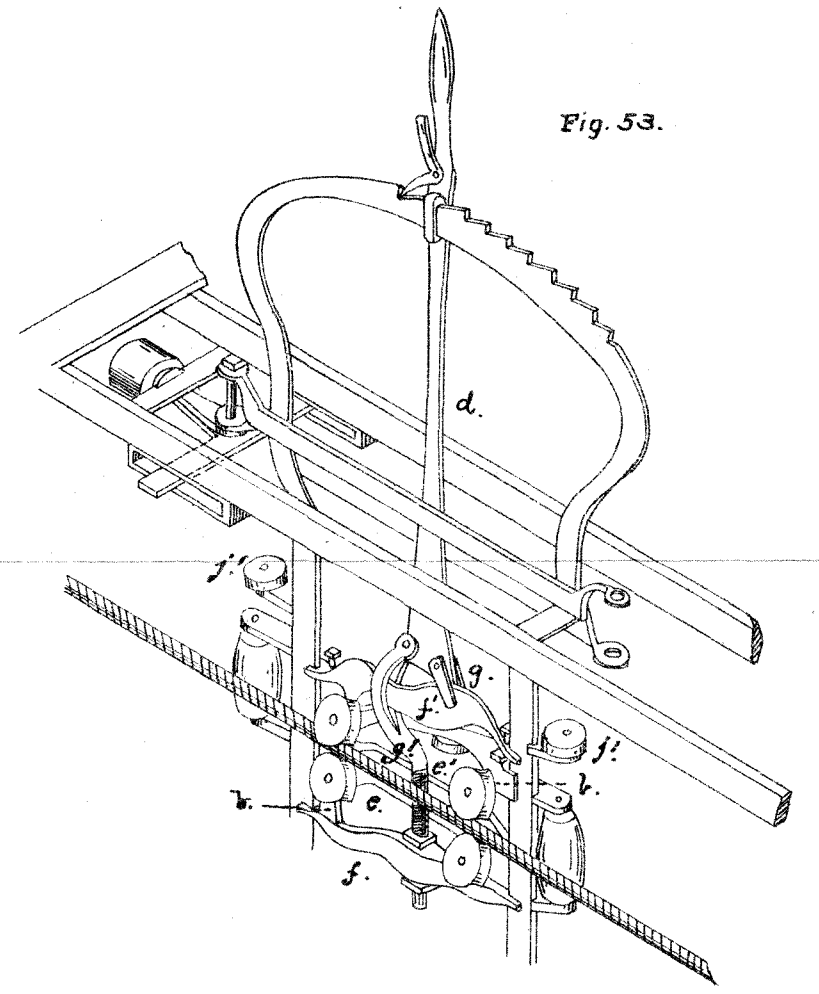

Fig. 54.

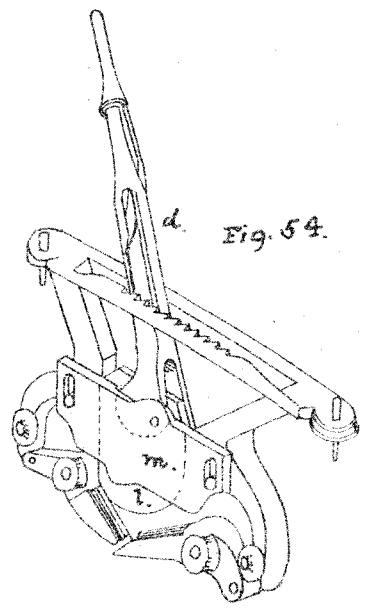

Fig. 55.

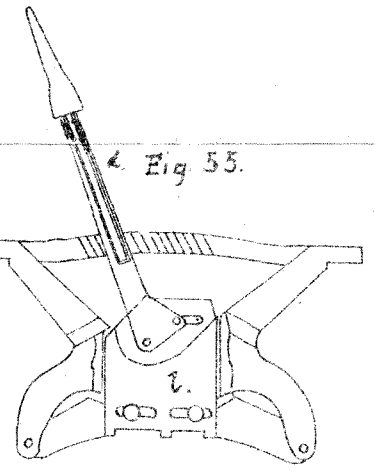

Fig. 56.



This is the Sheet of Drawings marked "E." referred to in the annexed Letters of Registration granted to Andrew Smith Hadidie this nineteenth day of October A.D. 1880.

(Sig. 357-)

PHOTO-LITHOGRAPHED AT THE GOVT. PRINTING OFFICE,
SYDNEY, NEW SOUTH WALES.

Augustus Loftus

A.D. 1880, 19*th October*. No. 881.

IMPROVEMENTS IN ELECTRIC LIGHTING AND IN APPARATUS THEREFOR.

LETTERS OF REGISTRATION to the Anglo-American Electric Light Company (Limited), for Improvements in Electric Lighting and in Apparatus therefor.

[Registered on the 20th day of October, 1880, in pursuance of the Act 16 Vic No. 24.]

BY His Excellency the Right Honorable Sir Augustus William Frederick Spencer Loftus, (commonly called Lord Augustus Loftus), Knight Grand Cross of the Most Honorable Order of the Bath, a Member of Her Majesty's Most Honorable Privy Council, Governor and Commander-in-Chief of the Colony of New South Wales and its Dependencies.

TO ALL TO WHOM THESE PRESENTS SHALL COME, greeting:

WHEREAS the Anglo-American Electric Light Company (Limited), of 74, Hatton Garden, London, in England, hath by its Petition humbly represented to me that it is the assignee of Charles F. Brush, of Cleveland, Ohio, in the United States of America, who is the author or designer of a certain invention or improvement in manufactures, that is to say, of an invention entitled "Improvements in Electric Lighting and in Apparatus therefor," which is more particularly described in the specification, marked A, and the eight sheets of drawings, marked B, C, D, E, F, G, H, and I, respectively, which are hereunto annexed; and that the said Company hath deposited with the Honorable the Treasurer of the said Colony of New South Wales the sum of Twenty Pounds sterling, for defraying the expense of granting these Letters of Registration, as required by the Act of Council, sixteenth Victoria, number twenty-four; and hath humbly prayed that I would be pleased to grant Letters of Registration, whereby the exclusive enjoyment and advantage of the said invention or improvement might be secured to the said Company for a period of fourteen years: And I, being willing to give encouragement to all inventions and improvements in the arts or manufactures which may be for the public good, and having received a report favourable to the prayer of the said Petition, from competent persons appointed by me to examine and consider the matters stated therein and to report thereon for my information, am pleased, with the advice of the Executive Council, and in exercise of the power and authority given to me by the said Act of Council, to grant, and do by these Letters of Registration grant unto the said Anglo-American Electric Light Company (Limited), and its assigns, the exclusive enjoyment and advantage of the said invention or improvement, for and during the term of fourteen years from the date hereof; to have, hold, and exercise unto the said Anglo-American Electric Light Company (Limited), and its assigns, the exclusive enjoyment and advantage thereof, for and during and unto the full end and term of fourteen years from the date of these presents next and immediately ensuing, and fully to be complete and ended: Provided always, that if the said Anglo-American Electric Light Company (Limited) shall not, within three days after the granting of these Letters of Registration, register the same in the proper office in the Supreme Court, at Sydney, in the said Colony of New South Wales, then these Letters of Registration, and all advantages whatsoever hereby granted, shall cease and become void.

In witness whereof, I have hereunto set my sign manual, and have caused the present Letters of Registration to be sealed with the seal of the said Colony of New South Wales, at Government House, Sydney, in New South Wales, this nineteenth day of October, in the year of our Lord one thousand eight hundred and eighty.

[L.S.] AUGUSTUS LOFTUS.

Improvements in Electric Lighting and in Apparatus therefor.

A.

SPECIFICATION of THE ANGLO-AMERICAN ELECTRIC LIGHT COMPANY (LIMITED), of 74, Hatton Garden, London, in England, assignees of Charles F. Brush, of Cleveland, Ohio, in the United States of America, for an invention entitled "Improvements in Electric Lighting and in Apparatus therefor."

THE invention relates to dynamo-electric machines, and has for its object the adaptation of such machines to variable external conditions, without variation of the speed at which their armatures are rotated, but by variation of the intensity of the magnetic field, and this by means not directly depending on the volume of current circulating in the external circuit. When dynamo-electric machines of usual construction are driven at a normal speed, the external or working resistance must be of certain amount in order to secure a normal volume of current in circulation. Any addition to the work to be performed, or increase of external resistance, is attended by a diminution of the current strength; while any decrease in the resistance of the external circuit is productive of an increased volume of current. In other words, the current produced by these varies inversely as the work they are called upon to perform. It is generally desirable, and often necessary, that the volume of current maintained in circulation by a machine should remain nearly constant, while the external or working resistance is varied within reasonable limits to conform to variable requirements. This end has heretofore been attained by varying the speed at which the armature of the machine is rotated. This method is generally impracticable, especially when many variations of external conditions are encountered.

This object is effected by varying the intensity of the magnetic field in which the armature rotates. Suppose a machine driven at its normal speed maintains its normal current through a certain external resistance; now if this resistance is diminished, and at the same time the intensity of the magnetic field of the machine is also diminished a certain amount, then the current in circulation will remain the same as before, because its electro-motive force has been lowered.

The magnetic field of the machine is weakened either by shunting away from the coils of the field magnets a portion of the current which excites them, or by cutting out or short-circuiting some portion of one or more of the coils, so that the current shall make a less number of convolutions about the cores of the magnets. By varying the resistance of the shunt which diverts a portion of the current from the magnet coils, or by varying the number of convolutions of the coils cut out or short-circuited, any number of variations in the intensity of the magnetic field of the machine may be produced.

In the drawings, sheet 1*a*, figure 1, represents a portion of a dynamo-electric machine, provided with a shunt of manually adjustable resistance round the field magnet circuit. Figure 2 represents a modified embodiment of the invention wherein its operations are performed in an automatic manner. Figures 3, 4, and 5 show other similar modifications. Figure 6 represents a field magnet coil adapted to have various portions of itself short-circuited. Figure 7 shows a modification of the same. Figure 8 represents a magnet helix adapted to have various portions of itself cut out of circuit.

In figure 1, A A represents the two helices of one of the magnets of a dynamo-electric machine; they are joined together in single circuit, and one end of the conductor so formed is attached to the commutator brush B, while the other end is attached to the binding-post P, forming one terminal of the machine. The other binding-post or terminal N is connected with the remaining commutator brush C.

a b c d e are resistance coils connected with each other in series, by means of the studs or buttons a^1 b^1 c^1 &c., the coil *a* being also connected with one end of the field magnet conductor at P. D is a switch-arm pivoted at *g*, and adapted to connect *g* with a^1 b^1 c^1, &c., at pleasure.

The stud *g* is connected with the commutator brush B, and these with the other end of the magnet circuit. Now when the terminals P N are connected by means of the external or working circuit (not shown, all of this current developed by the machine, in operation, will circulate in the helices A A as long as the switch-arm B is not in contact with any of the buttons a^1 b^1 c^1, &c.; but when the arm D is moved into contact with the button a^1, then a portion of the current developed by the machine will be diverted from the helices A A, and will flow through the shunt circuit P *a* a^1 D *g* B; the amount so shunted being determined by the resistance of the shunt circuit as compared with that of the magnet circuit.

The machine will now be in a condition to develop its normal current through a small external resistance only, because its field magnets are greatly weakened through the decrease of the current exciting them. The coil *a* is made of such resistance that when it only is included in the shunt circuit, the machine shall be adapted to operate normally the smallest external resistance met with in practice.

When the arm D is moved to the button b^1, the resistance *b* is added to the shunt circuit, whereby less current is diverted from the magnet circuit, the intensity of the magnetic field is increased, and the machine is adapted to operate an increased external resistance.

By moving the arm D to c^1, &c., and thus adding the resistance *c*, &c., to the shunt circuit, the machine will in like manner become adapted to operate more and more external resistance, until finally, when the arm D is moved off from the last button *e* (the resistance of the shunt circuit being now infinitely great), the machine will have attained its full power.

In order to adapt the machine to regularly increasing external resistance, the resistances *b c d e* are made successively greater, because each one, in order to increase the total resistance of the shunt in a given proportion, must obviously be larger than the one preceding it; thus the last resistance after *e* (circuit open) is infinitely greater.

Obviously one or more (preferably all) of the magnet helices of a machine may be included in that part of the circuit of the machine affected by the shunt.

In practice it is convenient to arrange the resistances *a b c*, &c., on metal cores in a metal case, and connect the piece of apparatus with the dynamo machine by means of suitable wires. The metal of the cores encased absorbs the heat developed in the resistance coils, and dissipated by radiation and convexion.

The

The metal case surrounding and protecting the resistance coils is also provided with suitable openings above and below, to allow a circulation of air about the coils, which arrangement materially aids in keeping them cool.

The invention is well adapted for use with dynamo-electric machines operating several electric lights in single circuit, since by means of this device such machines may operate normally any number of lights from one (the other lights being short-circuited) up to their full capacity without change of speed, and with an absorption of driving power varying (though not proportionally) with the number of lights used.

Figure 2 of the drawings illustrates a method of operating the switch-arm D automatically, according to the varying requirements of the working circuit of the machine.

The arm D is held in the position shown in the figure by means of the spring H, so that the shunt resistances are open-circuited when the machine is operating its highest external resistance. An armature is attached to a short prolongation of the arm D in front of an electro-magnet E, which is excited by the working current from the machine as shown. The tension of the spring H is so adjusted that it shall be just sufficient to hold the arm D in the position shown, when the current exciting the opposing magnet E is of normal amount.

Now if the external or working resistance of the machine is diminished, the first effect will be an augmentation of the volume of current in circulation; but this will at once increase the attraction of the magnet E for its armature, and the arm D will be thrown successively into contact with the buttons e^1 d^1, &c., until the shunt resistance is sufficiently reduced to effect the reduction of the general current nearly to its normal condition, in the manner already specified. Conversely an increase of resistance in the working circuit will first diminish the current in circulation; the magnet E will become weakened, and the opposing spring H will throw its arm D in the other direction, until the increasing resistance of the shunt produces a sufficiently increased working current to enable the magnet E to arrest the action of the spring.

Figure 3 shows a modified form of automatic shunt resistance. The resistance *a b c*, &c., of figures 1 and 2 are here replaced by a pile H of carbon discs or plates, the resistance of which is varied by varying pressure brought to bear upon the pile through the agency of the magnet E, the latter being excited by the working current from the dynamo machine, as described in connection with figure 2.

The operation of the device is obvious without further explanation. Figures 4 and 5 show obvious modifications of the resistance pile H (figure 3).

Instead of employing a fixed magnet core and movable armature in these automatic devices, the magnet helix may be made hollow, and a movable core may be substituted for the armature.

Means other than magnetism may also be employed to effect these automatic operations, such, for instance, as varying expansion in wires, bars, or ribbons of metal, produced by varying temperatures of such bodies due to varying currents passing through them.

Instead of shunting away a portion of the current used to excite the magnets of a dynamo-electric machine in order to reduce the magnetic field of the latter, some of the convolutions of the magnet helices may be short-circuited or cut out of the circuit altogether, thus reducing the magnetism by reducing the number of current convolutions. This method may be applied to one or several of the field-of-force helices of a machine.

Figure 6 shows an end view of a field magnet, core, and helix. A portion of the magnet head is represented as cut away, thus exposing the convolutions of helix conductor to view. Now by inserting one or more metalic pins or plugs between the convolutions of wire, as shown in the figure, a suitable number of layers of the wire may be short-circuited (and thus rendered inactive) to effect the purpose in view.

Figure 7 shows a modification of figure 6, wherein the short-circuiting plugs are replaced by a switch-arm connected with the outer convolution of wire, and adapted to make contact with various other convolutions, thus short-circuiting all of those convolutions or layers of wire which lie between.

Figure 8 shows a modification of the device shown in figure 7, wherein the switch-arm itself forms the terminal of the helix conductor, thus determining the number of convolutions of the working helix according to its position, the remaining idle convolutions being open-circuited.

The devices shown in figures 6, 7, and 8, sheet 1*a*, may be rendered automatic in their action by means analogous to that shown in figure 2.

The invention relates further to the magneto-electric machinery for the conversion of mechanical into electrical energy, and consists of improvements in the armature and commutators.

In the drawing, sheet 1, figure 1 represents a vertical section, through its axis, of apparatus with my said improvements. Figure 2 shows a vertical section, across its axis, of the same.

Figure 3 represents the armature with grooves or depressions at right angles to its axis.

Figures 4 and 5 show four modifications of the same.

Figure 6 shows a perspective view of the commutator cylinder complete. Figure 7 shows the same when developed.

Figure 8 shows a developed commutator provided with double the number of segments shown in figure 7, used when each section of wire of the armature is connected with two opposite segments, each section provided with its own pair of segments.

Figure 9 represents a commutator, wherein the strips of metal are arranged on the cylinder in a direction parallel with its axis.

Figure 10 represents a perspective view of the armature and commutator cylinder E, both on the shaft, with the sections of wire on the armature connected with the segments of metal on said cylinder, the first or last ends of diametrically opposite sections joined together, and the remaining ends only attached to opposite segments.

Figure 11 shows two diametrically opposite sections and segments, both detached, wherein the first and last ends of each section are connected with opposite segments.

Figure

Figure 12 represents a section and two segments all detached, showing how the first and last ends of a section are joined to opposite segments.

Figure 13 represents a number of sections on an armature and commutator cylinder, the sections being connected together in a continuous series, and joined to the segments.

Figure 14 shows a side view of the magnetic pole pieces in segmental form.

Figure 15 represents an annular armature without grooves, wound with a series of sections of wire connected together in a continuous series.

Figure 16 is a plan view of the armature provided with sections of wire wound in grooves (shown in figure 3).

Figure 17 shows a modified arrangement of commutator cylinder, and brushes or plates for collecting the electric current.

Figure 18 shows still another modified arrangement of commutator cylinder, and brushes or plates for collecting the electric current.

Figure 19 represents an armature without grooves, wherein the diametrically opposite sections with which said armature is wound have their first or last ends connected together, and their remaining ends attached to diametrically opposite segments.

Figure 20 represents modifications of grooved armatures in which the grooves are placed obliquely.

Figure 21 represents a grooved armature, in which the magnetic pole pieces are presented to the armature on three sides of its magnetic axis.

The armature A (shown in plan in figure 16) is of iron or other magnetic substance; it is in the form of a ring or endless band, and is attached to a hub B, of suitable material provided with any convenient number of spokes, as shown. This hub is rigidly attached to the shaft C, which, when driven by the pulley D, or by means of a crank, in case hand power is used, causes the armature to revolve in its own plane. The armature is provided with grooves or depressions in a direction at right angles with its magnetic axis or length. These grooves are wound full of insulated copper wire, in the manner shown. The sections of wire thus formed may be of any suitable number, according to the use for which the machine is designed, eight being shown in the drawing.

In figure 10 diametrically opposite sections have their first (or can have their last) ends joined together, and their remaining ends connected with two segments of metal of the commutator cylinder E, which is carried by the shaft C, and is of insulating material. The two metal segments are placed diametrically opposite each other on the cylinder, and are each of a length less than half the circumference of the latter. The two segments, say S^3 and S^7, corresponding to sections 3 and 7 of wire, hold a position on the cylinder in advance of those of the preceding sections S^2 and S^6 to the same angular extent that the sections 3 and 7 in question are in advance of sections 2 and 6. In this arrangement the number of segments is equal to the number of sections, each segment being connected with but one section. Figure 7 shows the commutator developed, showing the arrangement of metal segments on the same, and the manner in which they are connected with the section's wire. Each segment S is insulated from its neighbours, and has a wire soldered to its under side, and extending under, but insulated from, any segments which may be in front of it. A simplified arrangement is shown in figure 11; the wires represent the different segments, and appear at equal distances around the cylinder. All the sections or bobbins of wire on the armature being wound in the same direction, one section will have its first and last end connected respectively with wires 2 and 6, while the opposite section will be similarly connected with 6 and 2. Two metallic plates or brushes, F, figure 2, insulated from each other, press lightly upon cylinder E, at opposite points, so selected that while each section of wire on the armature is passing from one neutral point to the other, the corresponding segments on the cylinder will be in contact with them. These plates or brushes collect the currents of electricity generated by the revolution of the armature, one being positive and the other negative. When the section of wire is passing the neutral points on the armature, the plates F are in contact with the insulating material of the cylinder between the corresponding segments, thus cutting the section (which is at the time useless) out of the circuit altogether. During the time a section or bobbin is passing from one neutral point of the armature to the next one, an electric impulse, constant in direction, but varying in electromotive force, is induced in it. This electro-motive force, starting from nothing at the neutral point, quickly increases to nearly its maximum, and remains almost constant until the section is near the next neutral point, when it rapidly falls to zero as the neutral point is reached.

The insulating spaces are made of such a length that a section or bobbin is cut out of the circuit, not only when it is at the neutral points, but also during the time when its electro-motive force is rising and falling at the beginning and end of an impulse.

It is necessary to adjust the commutator cylinder on the revolving shaft of the machine with special reference to the neutral points of the armature when in motion, in order that its insulating space may correspond with said neutral points. This adjustment is made experimentally as follows:—The commutator cylinder having been placed approximately in its proper position, the machine is started, and the presence or absence of sparks at the points of contact between the brushes or plates F and commutator cylinder is noted.

By doubling the size of each bobbin and diminishing their number one-half, a current of double the intensity and one-half the quantity of the former will be obtained. This effect, however, can be secured in another manner by connecting the first and last ends of the two opposite sections together, and joining the remaining ends only to two opposite segments, as illustrated in figure 10. This arrangement I find most convenient in practice.

In figure 17 the strips of the commutator cylinder are arranged on the same in a direction parallel with its axis, and the current is taken off by a series of plates or brushes equal in number to the strips of metal; said plates or brushes attached to two curved plates arranged diametrically opposite each other.

In figure 18 the segments of the commutator cylinder are arranged in the same in pairs, placed diametrically opposite each other, each pair occupying a different position longitudinally, but the

same

same position circumferentially, and the current is taken off by an arrangement of brushes or plates similar to that shown in figure 17, each pair of oppositely placed brushes or plates however necessarily occupying a different position longitudinally with regard to the cylinder.

The two arrangements thus described, and illustrated in figures 17 and 18, may be substituted for the other arrangements shown.

The commutator cylinder may be turned ninety degrees on its axis, while the armature remains stationary, so that the sections would stand at right angles with regard to the segments. The position of the brushes would have to be changed accordingly in that case.

The electro-magnets H are excited by the whole or a portion of the electric current derived from the revolving armature, as is usual in apparatus of this kind, the novel feature of this part of the machine consisting of the manner in which the magnetic poles are presented to the armature; this arrangement is such that a very large proportion of the entire surface of the armature is constantly presented to the poles of the magnets, thus securing uniformity of magnetization, as well as maximum amount.

The iron segments N S (shown in figure 14) constitute the poles of the magnets H, and are arranged on both sides of the armature, as shown in figure 1, thus securing the advantages enumerated above.

In the drawings, sheet 2, figure 1 represents in perspective one form of annular armature constructed according to my invention, and figure 2 represents a cross-section of the same.

In both of the above figures the armature is shown naked of its wire, and disconnected from the other parts of the machine.

I prefer to construct the armature from cast iron, although any suitable metal may be used.

The armature is constructed substantially as shown in the drawing, and consists primarily of two parts A A^1, firmly secured together with any suitable insulating material E interposed between them. B represents an annular groove formed upon one or both sides of the armature, and, for reasons which will appear, there may be more of these grooves than are shown if desirable. C C are depressions in the armature, which in the completed machine are wound full of insulated wire. D D are holes piercing the armature from its periphery to the annular grooves B. When this armature is revolved (in its own plane) in a suitable magnetic field, electric currents will be induced in a direction at right angles to its circumferential length, and will traverse the wire wound in the depressions C.

In the drawings, sheet 3, figure 1 is a developed view of a commutator.

Figure 2 is a copy for purpose of convenient comparison with the commutator of figure 7 of the drawings, sheet 1, which shows a developed view of commutator.

Figure 3 is a view in cross-section of the device developed in figure 4.

Figure 4 shows a detached portion of another device as developed, and in end elevation.

S S represent the conducting plates or segments of the commutator that connect with the different bobbins on the armature on the same planes; T T are insulating segments intervening between the ends of the conducting segments S S; R represents separate metalic plates or sub-segments, to which are attached the wearing segments S T; P is a hub or cylinder of wood or any suitable non-conducting material, which serves as a carrier and as means of attachment to the entire commutator, and is made of suitable length, style, and dimensions to suit this object; O O are the bobbin wires that connect between the armature and commutator segments In this device the insulating segments T are composed of the same metal, preferably copper, on account of its durability and good conducting quality as the segment S, but being insulated from the pair of segments between whose ends it is located, a segment T performs the function of an insulating material as far as its particular pair of segments is concerned.

It will be observed that the insulating segment T may, if desired, be united to the side and form a part of an adjoining segment S. Beneath the segments S T are the bases or sub-segments R, corresponding in fashion and location to the segments S T above them.

The segments R are secured to the hub P by suitable screws, or the like, substantially as shown in figure 3, and to said segment R are attached the bobbin wires O, in any suitable manner to insure good electrical connection, as shown in figure 4.

The segments S are secured to the sub-segments R by peculiarly shaped screws, K, as shown in figure 3.

In the drawings, sheet 4, figure 1 represents in plan view a portion of a dynamo-electric machine, showing one of its magnetic helices partially wound, and so arranged as to exhibit the "teaser" and helix F, also to show one form of arranging the currents of the teaser and main wire.

Figure 2 is the same, showing, however, a modified arrangement of the currents of teaser and main wire.

Figure 3 shows a modified method of applying the teaser, by wrapping it upon the outside of the main helix instead of within it, as shown in figure 1.

Figure 4 shows another modified form of teaser, where it may be wrapped around the magnet alongside and independent of the main helix.

Figure 5 shows another modified form of device, in which the main helix F is omitted, and the magnet clothed only with the teaser.

A A represent the base and standards of a dynamo-electric machine; A^1 A^1 are bearings in which revolves the shaft that carries the armature and commutator cylinder; B is one arm of a field magnet, of which said magnets there are two in such a machine as here shown, one upon either side of the revolving armature; C C are metallic brushes for collecting the current from the commutator cylinder, and conducting the same down through their supports C^2 to suitable connections, where it is disposed of according to the arrangement of the circuits; D D^1 are binding posts, representing the positive and negative poles of the machine, from which proceeds the conductor for conveying said current to its place of application; E represents the "teaser,"

As shown in the drawings, the teaser E is first wrapped (say) in two courses around the core of the magnet

magnet B, and the main helix or wire F is wound outside and independent of the teaser. One end of the teaser wire is connected with the binding post D and brush C, and the other with the post D^1. The main helix wire F passes from the post D^1, to which it is connected, to the magnet core, around which it forms a helix, and finally connects with the brush C^1; thus arranged, the current will be as follows, while the external circuit is closed:—Tracing it from brush C it divides itself between the external circuit and the teaser inversely as their respective resistances, and again uniting into an undivided current at the post D^1, it passes on through the helix F to the brush C^1. If now the external circuit be opened, the reduced current consequently evolved by the machine will take the following course, by which it will be clearly perceived how, in such case, a permanent magnetic field is maintained. The current from the brush C passes through the teaser E, around its helical portion down to binding post D^1, where it meets the wire F of the main helix, through which it passes again around the magnet, and finally to the brush C^1. This arrangement of circuits as shown in figure 1, while for many purposes preferable on account of the increased amount of current convolutions passed around the magnets, is not the only one that will prove effective in carrying out and embodying my said invention. Such an arrangement of current as shown in figure 2 will serve an operative purpose. In this form the teaser E, instead of connecting with the wire F at the binding post D^1, as hereinbefore specified, takes the following course, commencing, say, at its connection with the brush C and post D, it proceeds to describe a helix around the magnet, and then terminates in its connection with the brush C^1.

Figure 5 of the drawing is designed to show the arrangement of the current when the wire F is omitted, as hereinbefore described, in which case the magnets are wound only with the teaser.

In the drawing, sheet 5, figure 1 is a view in longitudinal section of a device for holding and regulating the carbon sticks.

Figure 2 is a detached view showing the ring, clamp, and lifter, as it appears while not in operation; figure 3, the same as it appears while in operation.

Figure 4 is a detached view, showing my improved carbon holder.

Figure 5 comprehends a few of various modifications of which the invention is susceptible, without a departure from the spirit and principles thereof.

Figure 6 represents a form in which the invention may be applied to a lamp that moves both of its carbons.

In figure 1, A is a helix of insulated wire, said helix being in the form of a tube resting upon an insulated plate, A^1, upheld by the metallic post E. Within the cavity of the helix A is contained the iron core C and the rod B, which passes loosely through the core C. The core C is also made to move very freely within the cavity of the helix A, and it is partially supported within the cavity of said helix by means of the springs *c*, whose tension is regulated by the set screw c^1. These springs push upwards against ears attached to the core C; D is a ring of metal (preferably such as will not be attracted by the magnet) surrounding the rod B, just below the core C. One edge of the ring D is over a lifting tongue C^1, or its equivalent, which is attached to the core C, while the opposite edge of the said ring is a short distance below the crown of an adjustable set screw, D^1.

The support E (which may also act as a conductor) is fastened to a suitable base, H, to which base is also attached the mechanism for holding the carbon F^1. This mechanism consists of a support, G, terminating in a part similar in construction to the part B^1. The lower part of this support is bent at a right angle and rests upon the base H, and is fastened to said base by the thumb or set screw, or any equivalent device.

It is necessary that the carbons F F^1 should be presented in accurate opposition to each other, and, to accomplish this, the set screw C^1 is made to pass through a hole in the support G considerably larger than the shaft of said set screw.

It will thus readily appear that when the set screw G^1 is loosened, the support G may be moved about until its carbon F^1 shall properly present toward the carbon F, when it may be secured in proper position by tightening the set screw G^1. Now if one pole of any source of electricity be attached to the support G^1, while the other pole is connected to the support E, the electric current passes from the latter through the helix A, rod B, and carbons F F^1, down to the support G, thus completing the circuit. The core C, by force of the axial magnetism thus created, is drawn up within the cavity of the helix, and by means of the finger C^1 it lifts one edge of the ring D, until, by its angular impingement against the rod B, it clamps said rod and also lifts it up to a distance limited by the adjustable stop D^1. While the ring retains this angular relation with the rod B, said rod will be firmly retained and prevented from moving through said ring.

The adjustable stop D^1 is fixed so that it shall arrest the lifting of the rod D, when the carbons F F^1 are sufficiently separated from each other.

While the electric current is not passing, the rod B can slide readily through the loose ring D and the core C, and it will be readily seen that in this condition the simple force of gravity will cause the carbon F to rest down upon the carbon F^1, thus bringing the various parts of the device into the position of "closed circuit." Now if a current of electricity is passed through the apparatus it will instantly operate, as just explained, to lift the rod B, and thus separate the carbons F F^1 and produce the electric light.

The tension of the spring *c* is so adjusted by means of the screws c^1, or equivalent, that they, together with magnetic attraction of the helix, shall be just sufficient to support the core C, rod B, and carbon F, in the position described for producing light. As the carbons burn away, thus increasing the length of the voltaic arc, the electric current diminishes in strength, owing to the increased resistance. This weakens the magnetism of the helix, and accordingly the core, rod, and carbon F, move downward by the force of gravity, until the consequent shortening of the voltaic arc increases the strength of the current, and stops this downward movement. After a time, however, the clutch ring D will reach its floor or support D^2, and its downward movement will be arrested. Now, any downward movement of the core C, however slight, will at once affect the rod B, allowing it to slide through the ring D until it is arrested by the upward movement of the core C, due to the increased magnetism.

In

Improvements in Electric Lighting and in Apparatus therefor.

In continued operation, the normal position of the ring D is in contact with its lower support; the office of the core C being to regulate the sliding of the rod B through it. If, however, the rod accidentally slides too far, it will be instantly and automatically raised again, as at first, and the carbon points thus continued in proper relation to each other.

The rod B may be of such length that the longest carbon sticks may be employed.

The carbon holder shown consists essentially of a split cylinder, having a square or angular cavity. One of the pieces is attached to the rod B (or standard G), while the other part is loose, and is constructed to rest upon a stirrup B^2. A screw passing through the stirrup B^2 serves to clamp and bind the carbon between the two parts just specified.

I have thus far referred to my invention as applicable to a lamp wherein but one of the carbons is moved, but it is equally applicable to lamps that move both carbons, as shown in figure 6. Here A is again the helix; C, the core of iron; D, the clamping ring grasping a rod, directly connected to and controlling the movements of the rod B, holding the carbon F. C^1 is a spring lifting one edge of the ring D, similarly to the finger C^1 in figure 1, and the adjustable stop D^1 is identical with the one heretofore specified.

In this modification the motion of the core C is transmitted to the rod B substantially as heretofore described, and the exact motion of the rod B^1, through suitable link and lever connections b^1 b^2 b^3 b^4, is communicated in reverse to the rod B^1, carrying the carbon F^1. The operation of this device is similar to that of the device shown at figure 1. A current of electricity being passed through the helix A, the core C is by force of the axial magnetism thus created drawn up within the cavity of said helix.

The spring S or its equivalent acts as gravity does in the rod B, shown in figure 1, to keep the carbons together, and the force of the magnetism through the core C resists this tendency of the spring S to draw the carbon into actual contact. The rod B in this instance also passes through the ring D, which is held in its angular clamping position by the spring C^1, which is the equivalent of the finger C^1, figure 1.

The adjustable stop D^1 is the same as before described. As to the link and lever connection between the rods B and B^1, each rod is pivoted to a common frame at b. The rod B extends from the carbon F^1 to a point beyond the ring D, having a joint x where it is made to turn beyond the helix A. It is journalled at or near the end of a swinging lever b^2, said lever hinged to a common frame at b^1.

The rod B^1 extends from the carbon F to the point b^5, where it journals with a link b^2, which connects it with the lever b^2 at or very near the point of connection of the rod B. It will now readily be seen that motion given to either rod B or B^1 will be imparted in reverse to the other.

In the drawings referring to light regulators or electric lamps, sheet 6, figure 1 represents a vertical section of an electric light regulator; figure 2 shows a modified arrangement of releasing mechanism and clutch G H; figure 3 shows modified arrangement of principal helix A and adjusting helix I; figure 4 shows another modification of the same; figure 5 shows one method of applying the adjusting helix I to an ordinary magnet, such as is involved in many regulators in common use; figure 6 shows the adjusting helix I, as used without a principal helix; figure 7 shows a modification of the same; figure 8 shows the adjusting helix and principal helix operating different cores. Referring now to sheet 6, in figure 1, K is a base of suitable material to which is attached a metallic post E supporting the arm x, which carries the rod B. This rod moves through holes in the arm x, and has at its lower end a carbon holder which clamps the carbon F firmly in position, so that it is carried up and down with the rod; H is a ring clamp surrounding the rod B, and prolonged and weighted at one side, as shown. This clamp is supported on projections e attached to the arm x; l is a tube loosely surrounding the rod B for the purpose of preventing the clamp H being carried up with the rod B when the latter is raised; D is an iron core rigidly attached to the tube M, which projecting above and below the core passes through suitable bearings, as shown, and terminates above in the carbon holder L^1, which clamps the carbon F^1, the latter extending down the tube M as far as may be desirable; c are arms attached to the upper end of the core D, by means of which the spiral springs C support and force upwards the core D and with it the carbon F; c^1 are adjusting screws for regulating the tension of the springs C; G is an arm carried by the carbon holder L^1, and its upper end passes loosely through a hole in the prolonged end of the clamp H. This clamp is provided at its end with an insulating material m, so that the arm G cannot make electrical contact with it. The arm G is provided with an adjustable collar, n, so placed that when the core D is at the limit of its upward movement the end of the clamp H will be slightly raised. The lower portion of the core D is surrounded by a helix of coarse wire, A, having one of its ends attached to the binding post N, and the other in connection with the carbon holder L^1, through tube tbe M and its upper bearing as shown. P is a binding post attached to the post E. When the regulator is not in operation, the springs C will force the core D upward, the collar n on the arm G will raise the end of the clamp H, the rod B will be released, and will fall until the carbons F F^1 are in contact. The arm x being provided with a slot, through which the post E passes, the carbons F F^1 may be adjusted in proper position by loosening the nut y, which may then be tightened. The operation of the device as far as described is as follows:—The posts P N being attached to a suitable source of electricity, the current passes through the post E, arm x, and rod B to the carbon F, thence through the carbon F^1, tube M, and helix A to the other binding post N. Under these conditions the core D is drawn down by the axial magnetism of the helix A, carrying with it the carbon F^1 and arm G. The weighted end of the clamp H being thus allowed to fall at the beginning of the downward movement, the sides of the hole in the clamp through which the rod B passes impinged against the latter and prevent its downward movement. The core D continuing to move downward separates the carbons F F^1, and the voltaic arc is developed between them, thus producing the electric light. When the carbons have burned to such an extent that the core D approaches near to the limit of its upward movement, the clamp H is raised, and the rod B being liberated falls downward, carrying with it the carbon F, until the downward movement of the core D, caused by the shortening of the voltaic arc, allows the clamp H to again fasten the rod B. The releasing arm G,

figure

Improvements in Electric Lighting and in Apparatus therefor.

figure 1, may be replaced by the arrangement shown in figure 2, consisting of a lever *g* pivoted at one end to the post E, and connected by a link G with the clutch or clamp H. One end of the lever *g* projects over the carbon holder L^1, from which it is insulated by suitable material *h* as shown. The lever *g* and link G are so arranged that when the carbon holder L^1 is at its upper limit, the lever will be raised by it, thus raising the clamp H and liberating the rod B. An important element of this invention consists in the introduction of the second helix I, used alone or in connection with the principal helix A. I have styled the second helix the "adjusting helix"; it is employed for the purpose of governing the automatic adjustments of the regulator, its value for this purpose being more apparent when two or more are used in a single electric circuit, since no more than one regulator of the ordinary forms can be successfully operated by a single circuit. If, however, a device can be applied to the regulators above considered which shall automatically tend to force the carbons together with a constantly increasing pressure as their distance increases, then the two regulators, or as many more as the current is capable of operating, will work uniformly, each maintaining its due portion of the voltaic arc. This important result I attain by means of the adjusting helix I. This helix consists of wire very much finer than that of the helix A, and consequently the wire is much longer and makes more convolutions than the latter. The ends of the fine wire are connected with the binding posts P and N, but in such a manner that the electric current shall pass through it in a direction opposite to that in the helix A. It will now be seen that the electric current has two passages provided for it, one of high resistance through the adjusting helix I, and the other of comparatively low resistance through the helix A, carbons F F^1, and the voltaic arc between them. The number of convolutions of the helix I and its resistance are so proportioned to the number of convolutions in the helix A and its resistance, together with that of the normal voltaic arc, that the magnetising power of the latter helix shall be much greater than that of the former. The adjusting helix I may occupy various positions in relation to the principal helix A without interfering with its peculiar function; thus, for instance, it may be placed within the principal helix instead of at either end, or it may be placed outside of the latter. These modifications are shown respectively in figures 3 and 4. The adjusting helix is equally applicable to those regulators in which an ordinary electric-magnet is employed, having its helix or helices rigidly attached to its core or cores. One method of so applying is shown in figure 5; or it may be applied to those regulators having two principal helices, like the well-known Browning and similar regulators. When a single regulator is used in the electric circuit the adjusting helix acts as a valuable governor, preventing sudden changes of position in the carbons and insuring great uniformity of working. We have yet to consider the application of the adjusting helix to those regulators in which it may replace the principal helix entirely, while still performing its peculiar function. Such a regulator is shown in figure 6, in which the carbon F^1 is stationary, being connected directly with the binding post N. The adjusting helix I here acts on an iron core *p*, attached to the outer end of the clamp H, and taking the place of the weight similarly placed in figure 1. One end of the adjusting helix is attached to the binding post P, through the post E, while the other is attached to the binding post N. The operation of the device is as follows:—The electric current being supplied to the binding posts P N, the carbons are properly separated by raising the rod B. The electric current then divides itself between the main circuit of the regulator, including the carbons F F^1 and that of the adjusting helix, as before explained. When now the carbons burn away so that their separation becomes too great, the increased resistance of the main circuit strengthens the current of the adjusting helix so as to enable it to lift the core *p*, and with it the clamp H, thus allowing the rod B to move downward until the decreasing resistance of the main circuit again allows the core *p* to fall and clamp the rod B. Figure 7 shows a modified application of the adjusting helix as applied to the regulator just described. Here the helix I and the core *p* in figure 6 are replaced by an ordinary electro-magnet wound with the adjusting helix or helices, and acting on an armature of iron attached to the clamp H, as shown. Figure 8 shows a modification or development of the regulator represented in figure 6. In this case the lower carbon F^1 is operated by a principal helix A in the manner described in connection with figure 1, while the mechanism for releasing the rod B is operated by the adjusting helix I, as described in connection with figure 6. In the drawings, sheet 7, figure 1 shows a form of device and a method of placing several lamps on a single circuit; also one method of attaching a pendant lamp to a ceiling. Figure 2 shows a few of various modifications to which my invention is susceptible, as relates to the method of attaching a lamp to a wall or ceiling. Figure 3 shows a few of various modifications to which my invention is susceptible as regards mechanism for automatically accomplishing shunting or short circuiting.

A is a plate of wood, gutta-percha, or any other suitable non-conducting material; to this plate are attached the suspending hooks, loops, or their equivalent A^1. These hooks are simply designed to suspend the lamp, and are not placed in electrical connection with any part of the apparatus. A^2 are loops or hooks, attached to the wall or ceiling, with which the hooks A^1 engage. B B are contact plates, springs, or their equivalents, representing and placed in electrical connection respectively with the positive and negative poles of the lamp. B^1 B^1 are stationary plates, springs, or other suitable equivalent contact surfaces, fixed stationary at that locality in the wall or ceiling where the lamp is intended to be used. These contact surfaces B^1 represent and are placed respectively in electrical connection with the battery, dynamo-electric machine, or other source of electric current. The contact surfaces B and B^1 may be constructed in any manner, so that by the act of placing the lamp in position they shall be brought together in such a way that the lamp is put in the electric circuit. C is a frame, preferably constructed of iron or other electro-conducting material, and this frame is formed in any proper manner to hold and accommodate the various parts of the regulator; D is the magnet core hereinbefore described; D^1 is the armature; around the magnet core is wound the helix E of coarse wire, and the helix E^1 of fine wire. It will be observed that the armature is made movable by pivoting it to the frame C. The armature and frame C are placed in electrical connection with each other. The position of the armature D^1 during the time that the lamp is properly acting is in its dropped position away from the core D. The distance of the armature drop may be regulated in any desired way by means of the curved piece F, which may be bent at pleasure to adjust the desired drop of the armature. The piece F rests upon any suitable stop F^1; G is a contact point of any suitable conducting material so placed that the armature as it is lifted will impinge against it before coming into contact with the core D, thus always preventing any actual union between the core and armature. This contact point G

connects

connects with the coarse wire helix E. The coarse helix is arranged and connected as follows :—Commencing from the contact plate B, it describes a helix around the core D, and terminates with the contact point G. Thus it will be seen that until connection is made between the contact point G and armature D^1, the coarse helix E does not constitute any part of a completed circuit. The fine wire helix E^1, commencing from its attachment to the coarse wire, as shown at *c*, proceeds directly to describe a helix about the core D, and then connects with the frame at c^1, and also with the pole B, opposite from that to which the coarse helix E is primarily connected as above specified. The armature and its adjustment may be varied, as indicated in the drawings. During the time that the lamp is properly performing, the current through the fine wire helix E will not be sufficient to lift the armature D^1, but when it is desirable to "shunt circuit" the lamp as above set forth, then the current will be sufficiently strong to draw the armature. Beginning from the pole B it passes down through coarse helix, thus strongly magnetising the core D (and thus securely maintaining a "contact position" of the armature), then through the contact points G, and through the armature D^1 to the frame C, and from thence to the opposite pole B, with which the frame C is now in electrical connection.

In the drawing, sheet 8, figure 1 is an isometric view of a lamp embodying the invention, the said lamp operating two sets of carbons. Figure 1*a* is a diminished view of the lamp showing its general appearance and proportions. Figure 2 is a detached view of the parts operating to lift the carbon rods and thus to dissimultaneously operate the carbons of the two sets there shown. Figure 3 is a detached view showing a supporting device between the carbon lifting or separating apparatus and one of the lifted carbons. Figure 4 is a vertical sectional view of the device shown in figure 1. Figure 5 is a view in longitudinal section of a carbon holder in the shape of a tube, which tube constitutes the body of a dash-pot and which also constitutes the moving element of the dash-pot, the piston being stationary. Figure 6 are detached plan views of the plunger and valve of the dash-pot shown in figure 5; and figure 7 is a view more fully illustrating the combination of cut off mechanism and resistance.

A represents one set of carbons; A^1 another set, each carbon having an independent holder, B B^1. The carbon holders B B^1 may either be in the form of a rod or tube, and each of them is made to pass through a clamping and lifting device C C^1 respectively. These clamps and lifter C C^1 are shown in the present instance in the shape of rings surrounding their respective carbon holders B B^1. Each ring clamp C C^1 is adapted to be lifted from a single point, thus tilting it and causing it to grasp and lift its enclosed carbon holder. This tilting and lifting movement is imparted to the clamps C C^1 by any suitable lifter D, and this lifter may have its movement imparted either by magnetic attraction due to the current operating the lamp, or by the expansive action of heat upon any suitable apparatus connected with the lamp, said heat generated by the electric current operating the lamp. The lifter D in the present instance is so formed that when it is raised it shall not operate upon the clamps C C^1 simultaneously, but shall lift first one, then the other (preferably the clamp C first and C^1 second, for reasons which will hereinafter appear).

This function of dissimultaneous action upon the carbons or their holders, whereby one set of carbons shall be separated in advance of the other, constitutes a principal and most important feature of my invention. In the clamp shown in the drawings, the lifter D is actuated and controlled through the agency of magnetic attraction due to the influence of the current operating the lamp; and this is accomplished as follows :—One, two, or more spools or hollow helices E, of insulated wire are placed in the circuit within whose cavities freely move cores E^1. The electric current passing through the helices E, operates to strongly draw up within their cavities their respective cores E^1.

The cores E^1 are rigidly attached to a common bar E^2, and the upward and downward movement of this bar, due to the varying attractions of the helices E, is imparted by a suitable link and lever connection E^3, E^4, to the lifter D. By this connection the lifter will have an up and down movement in exact concert with the cores E^1.

The lifter D may be so constructed and applied as to separate the carbons A and A^1 successively or dissimultaneously by being so balanced that any difference, however slight, between the weights of the carbons A A^1, or their holders B B^1, shall result in one being lifted and separated before the other.

In order properly to balance the attractive force of the magnets, a coil spring F or its equivalent may be employed substantially as shown; and to ensure a steady motion to the magnets and to the carbon points A A^1, a dash-pot G or its equivalent should be employed, as this prevents any too sudden or excessive movement of parts H. H^1 are metallic cables through which the current is conducted from above the clamps C C^1 to the carbons A A^1.

The operation of this device is as follows :—

When the current is not passing through the lamp, the positive and negative carbons of each set A A^1 are in actual contact.

When now a current is passed through the lamp, the magnetic attraction of the helices E will operate to raise the lifter D; this lifter D, operating upon the clamps C and C^1, tilts them and causes them to clamp and lift the carbon holders B B^1, and thus separates the carbons and produces the voltaic arc light. But it will be especially noticed that the lifting and separation of these carbons is not simultaneous; one pair is separated before the other, it matters not how little nor how short a time before. This separation breaks the circuit at that point, and the entire current is now passing through the unseparated pair of carbons A^1; and now when the lifter continues to rise, separates these points, the voltaic arc will be established between them and the light thus produced.

In the lamp, as shown in the drawings, the support K is in the form of a tube surrounding the carbon holder B, and this support K is made of such a length that when the carbons A^1 shall have been sufficiently consumed, a head upon the carbon holder R will rest upon the top of the support K, whereby the weight of the carbon holder B and its support K shall, at all times and under any circumstances, be supported by the lifter D.

Besides the carbon holder B with its carbon and the support K, the lifter D (when the lamp is in operation) should also be made to carry the carbon holder B^1 and its carbon.

The lamp is primarily adjusted so that the magnets through the lifter D shall always carry a definite load, to wit (in the lamp shown), the carbon holders B and B^1 and support K.

Improvements in Electric Lighting and in Apparatus therefor.

Said support K might be omitted if desired in a lamp where the lifter is actuated through the agency of the expansion of a metal wire or bar, by the action of heat generated by the current operating the lamp.

L L^1 are metallic hoods or protectors for inclosing and shielding the upper projecting ends of the carbon holders B B^1.

The poles of the lamp are constructed in the form of suspending hooks or loops from which the lamp is suspended, and the corresponding hooks or loops with which they engage in the ceiling (or other locality where the lamps are used) are the positive and negative poles of the current-generating apparatus.

Thus by the simple act of suspension the lamp is placed in circuit ready for use.

Another feature of the lamp consists in the provision whereby the protecting globe surrounding the light can be raised and lowered for convenience in renewing carbons and handling the lamp. This is accomplished by making the platform or gallery O upon which the globe rests vertically adjustable upon a rod O^1 attached to the lamp frame in any convenient manner. A set screw should be provided whereby the globe can be adjusted to any desired position.

In order to accommodate long sticks of carbon, the platform or gallery O should be perforated to allow passage down through it of said carbon sticks.

It will be particularly observed that in the form of dash-pot employed, which is shown in figure 5 of the drawings, the cylinder is the movable and the piston or plunger the stationary element.

The piston or plunger of the dash-pot is shown stationary. Figure 6 in plan view illustrates the valvular construction of the plunger.

It will be seen that the plunger is itself a hollow cylinder perforated at its top; and upon this perforated top rests a sliding disk which slides upon the plunger rod. Thus in its upward movement (or the downward movement of the body or tube) it will be retarded and will move slowly, while a positive movement can be accomplished with more ease and rapidity, owing to the lifting of the valve and the escape of fluid through the top of the piston or plunger. The upper portion of the dash-pot tube shown in figure 5 has an enlarged diameter forming a reservoir, which is designed to prevent overflow of the liquid contents of the dash-pot.

Sheet 8 of the drawings partially illustrates, and figure 7 more particularly shows, that which shall be now described.

P is a bar or slab of wood or any suitable electro-nonconducting substance.

Q is an iron rod attached at its upper end to the slab P, and at its lower end to an iron cross-piece R.

S is another rod of any material mechanically connecting the part R and P.

T is a holder for a carbon A^1. The parts A^1 T R Q are electrically connected with each other.

B is a vertically sliding rod or tube of brass or other suitable electro-conducting material ending below in a holder for retaining a carbon, A^1.

The separation of the electrodes A A^1 is accomplished by moving the rod B, in the manner here specified or in any other manner.

U is an electro-magnet core of soft iron. It is surrounded by two helices, V V^1, and is attached to the slab P. The helix V is of coarse wire, and of correspondingly low resistance.

The helix V^1 is of fine wire, and it offers a higher resistance to the current. This helix V^1 is always in closed circuit with the current operating the lamp, so that said current divides itself between the helix V^1 and the lamp electrodes in proportion to the relative resistances offered in these two paths, as in manner hereinafter appears.

The coarse wire helix V connects with the pole W at one end and W^1 after describing a sufficient number of convolutions about the core U terminates blindly as shown at V^2, thus forming no part of a closed circuit, while the armature M^2 is separated from it, as shown in the drawings.

The armature M^2, while being insulated from the lamp frame, is pivotally attached thereto. Its drop and consequent distance in separation from the core U is determined by any suitable adjustable stop M^3. As the armature M^2 is held closer to or farther from the core U, a proportionally weaker or stronger current through the fine wire helix V^1 will be required to lift said armature into contact with the blind end V^2 of the coarse wire helix V.

M is a resistance electrically connecting the armature M^2 and the pole W^1 of the lamp.

The lamp casing X is electrically connected with the rod B.

While the lamp is in normal operation, the various parts are in substantially the relation shown in the drawings, and the current is (say) from the pole W^1 through frame X and rod B to the carbon A. Thence through the carbon A^1, its holder T, the cross-piece R, and rod Q, to the opposite pole W.

Here is the path for the major portion of the current, but as already said there are two paths between which the current divides itself according to their respective and relative resistances. One is that already traced out, the other is (say) from the pole W through the wire V, fine wire helix V^1, coarse wire V, to the opposite pole W^1.

Now, when the resistance in the lamp proper is normal the armature is in the open circuit position, that is, dropped down and separated from the blind end V^2 of the coarse wire helix V; but if for any reason the resistance in the lamp (say at the electric arc) is abnormally great, then the current will be greatly increased through the fine wire helix V^1 until the core becomes sufficiently magnetic to draw up its armature M^2 into contact with the blind end V^2 of the coarse wire helix. As soon as this connection is made the electrodes are practically cut out of the circuit; for now the path of the current is from pole W through the wire V, resistance M, armature M^2, and helix, to the opposite pole W^1.

So long as the current take this course, the coarse wire helix V forms a part of a close circuit, and strongly magnetises the core U

We now find the electrodes A A^1 and the mechanism separating them released from the control of the

the operating current; therefore, the carbons by force of gravity will fall into contact into the position of closed circuit.

At this time, if the lamp is in a normally operative condition, it is desirable that the cut-off or shunting mechanism cease its operation, and that the current be again established through the electrodes so as to produce the arc light; and this will be accomplished, for now the carbons, being united, they will offer a passage to the current having a resistance so much lower than offered by the resistance M, that the current through the coarse wire helix V will be so weakened that the core U will not be sufficiently magnetic to sustain its armature M^2, which will drop and thus break the circuit at that point, and re-establish the normal flow through the electrodes A A^1. But if the lamp is in such inoperative condition as to continue its abnormal resistance to the passage of the current, then the armature M^2 will not be released, but will be maintained in its closed circuit position, and the lamp will be permanently extinguished. It will thus be seen that any accidental cause, while it may call into action for a time the shunting mechanism, will not result in the continued extinguishment of the lamp.

Claims :—

1.—A dynamo-electric machine wherein the field of force electro magnets are excited wholly by the main or working current, constructed or combined with suitable mechanism for varying the magnetizing effect of the exciting current according to the requirements of the external or working circuit

2.—A dynamo-electric machine wherein the field of force electro-magnets are excited wholly by the main or working current, constructed or combined with suitable mechanism for shunting from one or more of the inducing magnets of said machine a portion of the exciting current according to varying requirements of the external or working circuit.

3.—A dynamo-electric machine wherein the field of force electro-magnets are excited wholly by the main or working current, constructed to have the exciting current diverted from a suitable number of convolutions of the field of force helices to adapt the strength of the magnetic field to the varying requirements of the external or working circuit.

4.—An annular armature constructed from a single solid piece of metal, and grooved upon its periphery or sides, or both, substantially as shown.

5.—An annular armature, consisting of two or more plates formed with grooved sides or peripheries, or both, and insulated either partially or entirely from each other.

6.—A commutator cylinder of an insulating hub or body, to which are attached sub-segments placed in proper electrical connection with the general mechanism in which the commutator is employed, and wearing segments detachably attached to said sub-segments, substantially as shown.

7.—The combination of sub-segments R, wearing segments S or T, and screws K, substantially as and for the purposes shown.

8.—The commutator having metallic insulating segments T, substantially as shown.

9.—A commutator having metallic insulating segments T, attached to and forming part of the adjoining conducting segments S, substantially as shown.

10.—A commutator having two conducting segments S, two opposing ends of which said segments are separated by an intervening insulator T, the other ends of said segments, while insulated from each other, being closely associated and not provided with an insulator T, substantially as shown.

11.—A dynamo-electric machine, wherein a portion of the current produced or capable of being produced thereby is diverted for the purpose of maintaining a permanent magnetic field, substantially as shown.

12.—In a dynamo-electric machine the wire or helix E, having a comparatively high resistance and kept in closed circuit while the machine is running, in combination with the magnet wire or helix F as commonly employed, substantially as shown.

13.—In an electric lamp the combination with the carbon holder and core of a clamp surrounding the carbon holder, said clamp being independent of the core but adapted to be raised by a lifter secured thereto, substantially as shown.

14.—In an electric lamp the clamp D, or its equivalent, by means of which the carbon holder B is firmly held and permitted to accurately feed the carbon point as the same is consumed, substantially as shown.

15.—In an electric lamp or regulator, the combination of the clamp D and adjustable stop D^1, or their equivalent, by means of which the carbon points are prevented from becoming so far separated as to break the electric current and extinguish the light, substantially as shown.

16.—In an electric lamp, the combination of core or armature C and the clamp D, by means of which the carbon points are separated from each other as soon as the electric current is established, and held asunder during the continuance of the current, and then permitted to come together as soon as the current ceases, substantially as shown.

17.—In an electric lamp or regulator, the combination of the core or armature C, the clamp D, an adjustable stop D^1, or their equivalent, whereby the points of the carbons are separated from each other when an electrical current is established, and prevented from separating so far as to break the current, and gradually feed together as the carbons are consumed, substantially as shown.

18.—In combination with the core C, one or more sustaining springs *c*, or their equivalent, substantially as shown.

19.—

19.—The combination in a single circuit of two or more electric lights, each of which is provided with an upper carbon point having mechanism connected therewith for releasing the carbon holder, and allowing it to be fed by gravity, and a lower carbon, the position of which is regulated by the resulting force of axial magnetism, caused by the passage of electricity through a helix in the main circuit and a helix in a shunt circuit, substantially as shown.

20.—In an electric light regulator the combination with a carbon holder of a magnet surrounded by two helices, one helix located in the main circuit and the other in a shunt circuit, the main and subsidiary currents passing through said helices in opposite directions, substantially as shown.

21.—In an electric lamp the combination with a movable core supporting a carbon point, and upheld by suitable springs of a helix surrounding the core and connected with the main circuit, and a superposed subsidiary helix, also surrounding the movable core and connected with a shunt circuit, substantially as shown.

22.—In an electric lamp, the combination with a movable core supporting one of the carbon points, and a main and subsidiary helix surrounding said core, and respectively connected with main and shunt circuits of the upper carbon point, and suitable intervening mechanism, whereby the upper carbon point is fed downward by the action of the lower carbon point, substantially as shown.

23.—In an electric lamp, the combination with the upper and lower carbon points thereof of a helix in the main circuit and a helix in a shunt circuit, both of said helices surrounding a movable core, with which one of the carbon points is connected.

24.—In combination with an electric lamp, a suitable short circuiting device adapted to automatically shunt the current from the lamp, when for any reason there is a too great resistance offered by said lamp, substantially as shown.

25.—A system wherein two or more electric lamps or light regulators are placed in a single electric circuit with short circuiting contrivances, connected with each said lamp or regulator, the whole being so arranged, constructed, adjusted, and electrically connected, that from any lamp or regulator offering too great a resistance the current will be automatically shunted, substantially as shown.

26.—The combination with each electric lamp on a single circuit, containing two or more of said lamps of a shunt, and mechanism, substantially as described, whereby any undue resistance in any lamp to the passage of the electric current will operate to automatically shunt the current through such lamp's individual shunt, thereby shunting the current from said lamp without permanently extinguishing or materially affecting any other lamp in the circuit, substantially as shown.

27.—An electro-magnet D, having a fine wire helix E^1, and a coarse wire helix E, combined, substantially as specified, and adapted respectively to shunt, and to maintain shunted, the current from an electric lamp with which it is associated, substantially as shown.

28.—The combination with an electric lamp of the electro-magnet D and an armature D^1, being electrically connected in such a manner that when, by reason of the lamp with which it is associated offering too great a resistance to the electric current, it (the said armature) shall be made to close a shunt circuit, thereby shunting the current from said lamp, substantially as shown.

29.—Associated with an electric lamp or regulator, the helix E^1 of comparatively high resistance, adapted to automatically operate a shunting device whenever said lamp or regulator shall offer an abnormally great resistance to the current, substantially as shown.

30.—In combination with a suitable device for attaching an electric lamp to a wall, ceiling, or support, one or more suitable contact surfaces B B, electrically connected with said lamp, and contact surfaces B^1 B^1, representing and placed in electric connection respectively with the positive and negative poles of the battery or other source of electric current, said contact surfaces B^1 placed stationary at the locality where said lamp is intended to be used, substantially as shown.

31.—In an electric lamp two or more pairs or sets of carbons in combination with mechanism constructed to separate said pair dissimultaneously or successively, substantially as and for the purposes specified.

32.—In an electric lamp two or more pairs or sets of carbons in combination with mechanism constructed to separate said pairs dissimultaneously or successively, and establish the electric light between the members of but one pair (to wit, the pair last separated), while the members of the remaining pair or pairs are maintained in a separated relation, substantially as shown.

33.—In an electric lamp having more than one pair or sets of carbons, the combination with said carbon sets or pairs of mechanism constructed to impart to them independent and dissimultaneous separating and feeding movements, whereby the electric light will be established between the members of but one of said pairs or sets at a time, while the members of the remaining pair or pairs are maintained in a separated relation, substantially as shown.

34.—In a single electric lamp two or more pairs or sets of carbons, all placed in circuit, so that when their members are in contact, the current may pass freely through all said pairs alike, in combination with mechanism constructed to separate said pairs dissimultaneously or successively, as and for the purpose shown.

35.—In an electric lamp wherein more than one set or pair of carbons are employed, a lifter D or its equivalent, moved by any suitable means, and constructed to act upon said carbons (or carbon-holders), dissimultaneously or successively, substantially as and for the purpose shown.

36.—In an electric lamp wherein more than one pair or sets of carbons are employed, a clamp C, or its equivalent, for each said pair or set; said clamps C adapted to grasp and move said carbons or carbon holders, dissimultaneously or successively, as and for the purpose shown.

37.—In an electric lamp the combination with a carbon holder and the mechanism moving said carbon holder, of a lifter or support K, or its equivalent constructed to operate in compelling the said moving mechanism to sustain the weight of the carbon holder after its carbon is sufficiently consumed or removed, substantially as and for the purpose described.

38.—The resistance M, or its equivalent, in combination with any contrivance adapted to shunt the current from an electric lamp when for any reason said lamp shall offer an abnormally great resistance to the passage of the current operating it, substantially as and for the purpose shown.

39.—The combination with the electrodes A, of an electric lamp and the mechanism separating and governing said electrodes of a suitable shunt or cut off, and a resistance M, or its equivalent, said shunt or cut off adapted automatically to afford a sufficiently free passage for the current independent of the lamp, when from any cause said lamp shall offer an abnormally great resistance to the passage of said current, and said resistance adapted on the union of said electrodes to weaken or break the circuit through said shunt, and thus to re-establish the normal flow of current through the electrodes and reproduce the light, substantially as shown.

In witness whereof, we, the said Anglo-American Electric Light Company (Limited), have hereunto set our seal, this twelfth day of March, in the year of our Lord one thousand eight hundred and eighty.

J. IRVING COURTENAY,
THOS. J. MONTGOMERY,
Directors.

The common seal of the Company was affixed in the presence of,—
G. R. DAVIES,
Secretary.

This is the specification, marked A, refered to in our annexed Letters of Registration, granted to the Anglo-American Electric Light Company (Limited), this nineteenth day of October, A.D. 1880.

AUGUSTUS LOFTUS.

REPORT.

Sir,

Sydney, 14 July, 1880.

The application of the Anglo-American Light Company for Letters of Registration for "Improvements in Electric Lighting and in Apparatus therefor," having been referred to us, we have examined the specification and drawings accompanying the same, and have now the honor to report that we see no objection to the issue of Letters of Registration as prayed for.

We have, &c.,
J. SMITH.
E. C. CRACKNELL.

The Principal Under Secretary.

[Drawings—eight sheets.]

B.

[881]

(Sheet 1a)

FIG. 1.

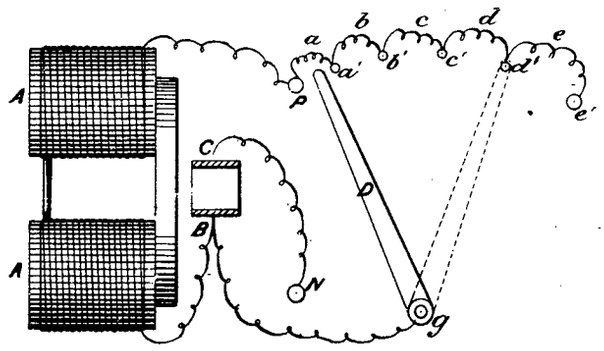

FIG. 3.

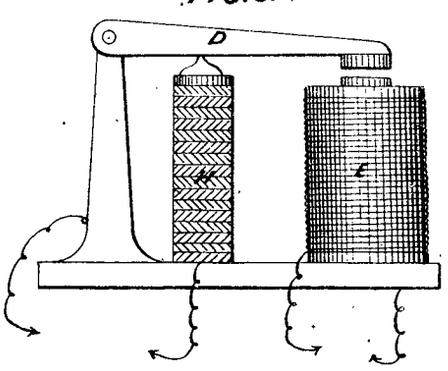

FIG. 2.

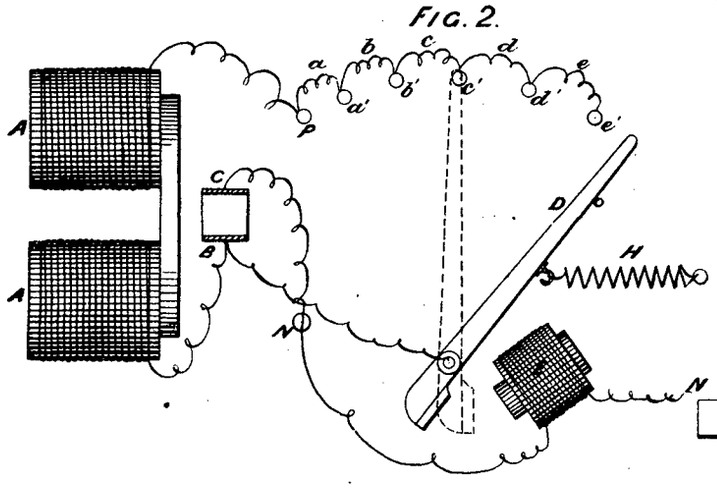

FIG. 4.

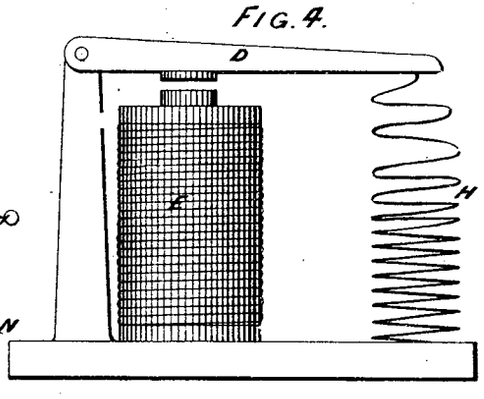

FIG. 5.

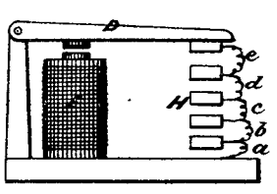

FIG. 6.

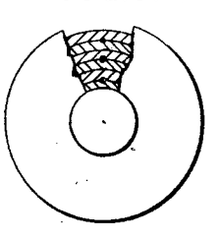

FIG. 7.

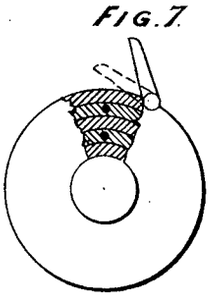

FIG. 8.

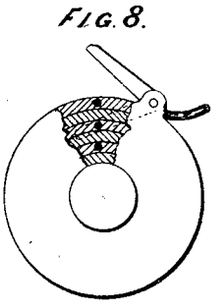

This is the sheet of Drawings marked "B" referred to in the annexed Letters of Registration granted to the Anglo-American Electric Light Company, Limited, this seventeenth day of October A.D. 1880

(Sig: 357-)

"Augustus Loftus."

PHOTO-LITHOGRAPHED AT THE GOVT. PRINTING OFFICE, SYDNEY, NEW SOUTH WALES.

C. [881]

(SHEET 1.)

FIG. 1.

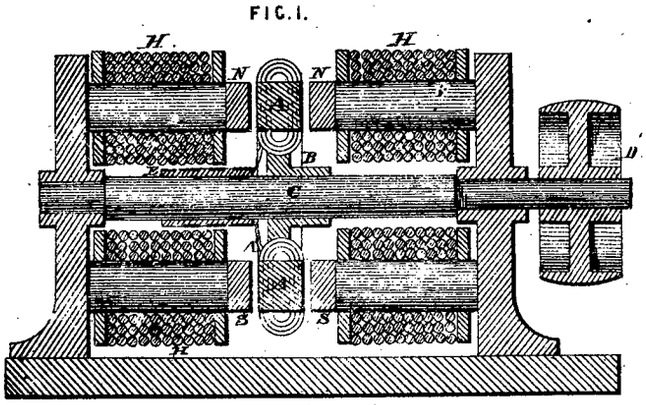

FIG. 2.

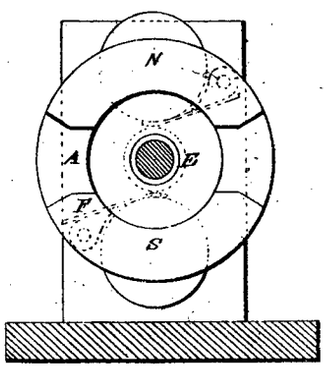

FIG. 3.

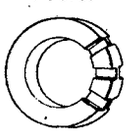

FIG. 4.

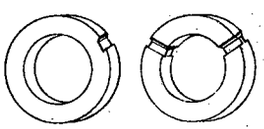

FIG. 5.

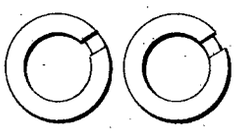

FIG. 6.

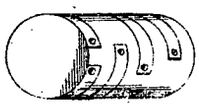

FIG. 7.

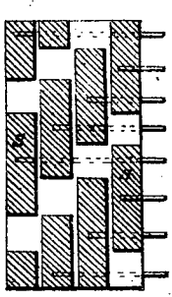

FIG. 8.

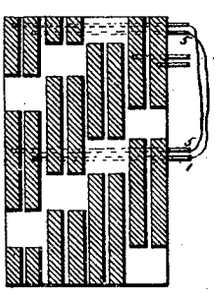

FIG. 9.

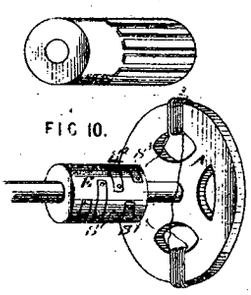

FIG. 10.

FIG. 11.

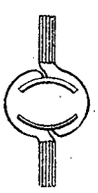

FIG. 12.



FIG. 13.

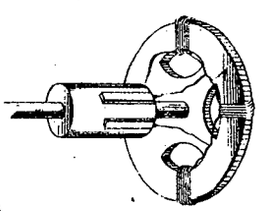

FIG. 14.

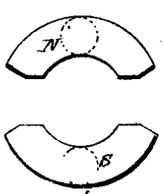

FIG. 15.

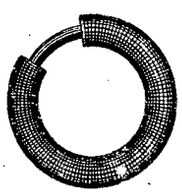

FIG. 16.

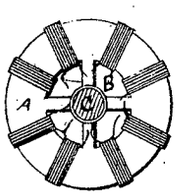

FIG. 17.

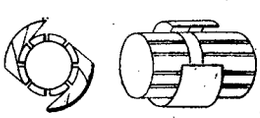

FIG. 18.

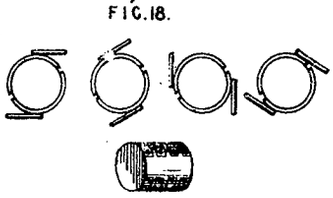

FIG. 19.

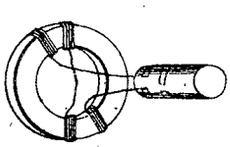

FIG. 20.

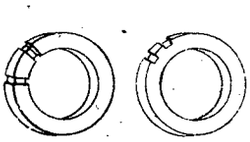

FIG. 21.

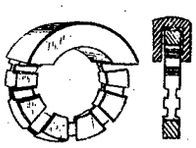

This is the Sheet of Drawings marked "C" referred to in the annexed Letters of Registration granted to the Anglo-American Electric Light Company Limited this nineteenth day of October A.D. 1880.

(Sig: 357-)

"Augustus Loftus"

PHOTO-LITHOGRAPHED AT THE GOVT. PRINTING OFFICE, SYDNEY, NEW SOUTH WALES.

(SHEET 2.)

FIG. 1.

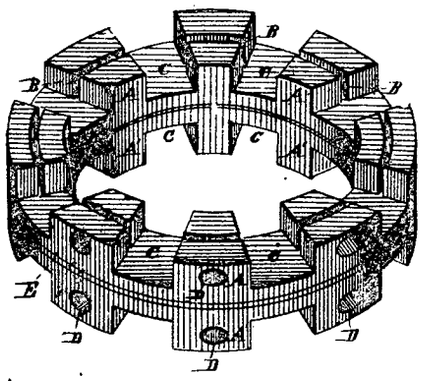

FIG. 2

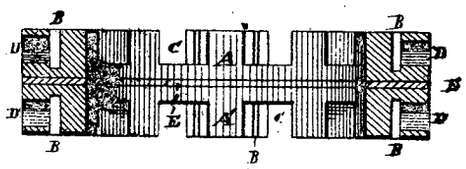

(SHEET 3.)

FIG 1

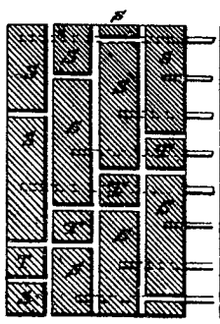

FIG. 2

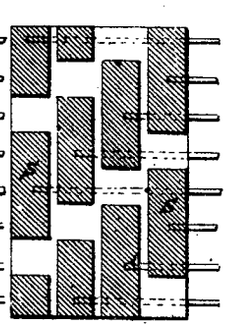

FIG 3

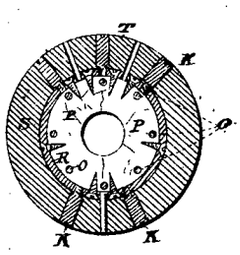

FIG. 4

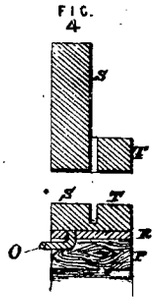

This is the sheet of Drawings marked "D" referred to in the annexed Letters of Registration granted to The Anglo-American Electric Light Company Limited this nineteenth day of October A.D. 1880.

(Sig: 357-)

"Augustus Softus"

PHOTO-LITHOGRAPHED AT THE GOVT. PRINTING OFFICE, SYDNEY, NEW SOUTH WALES.

F

[881]

(SHEET 5.)

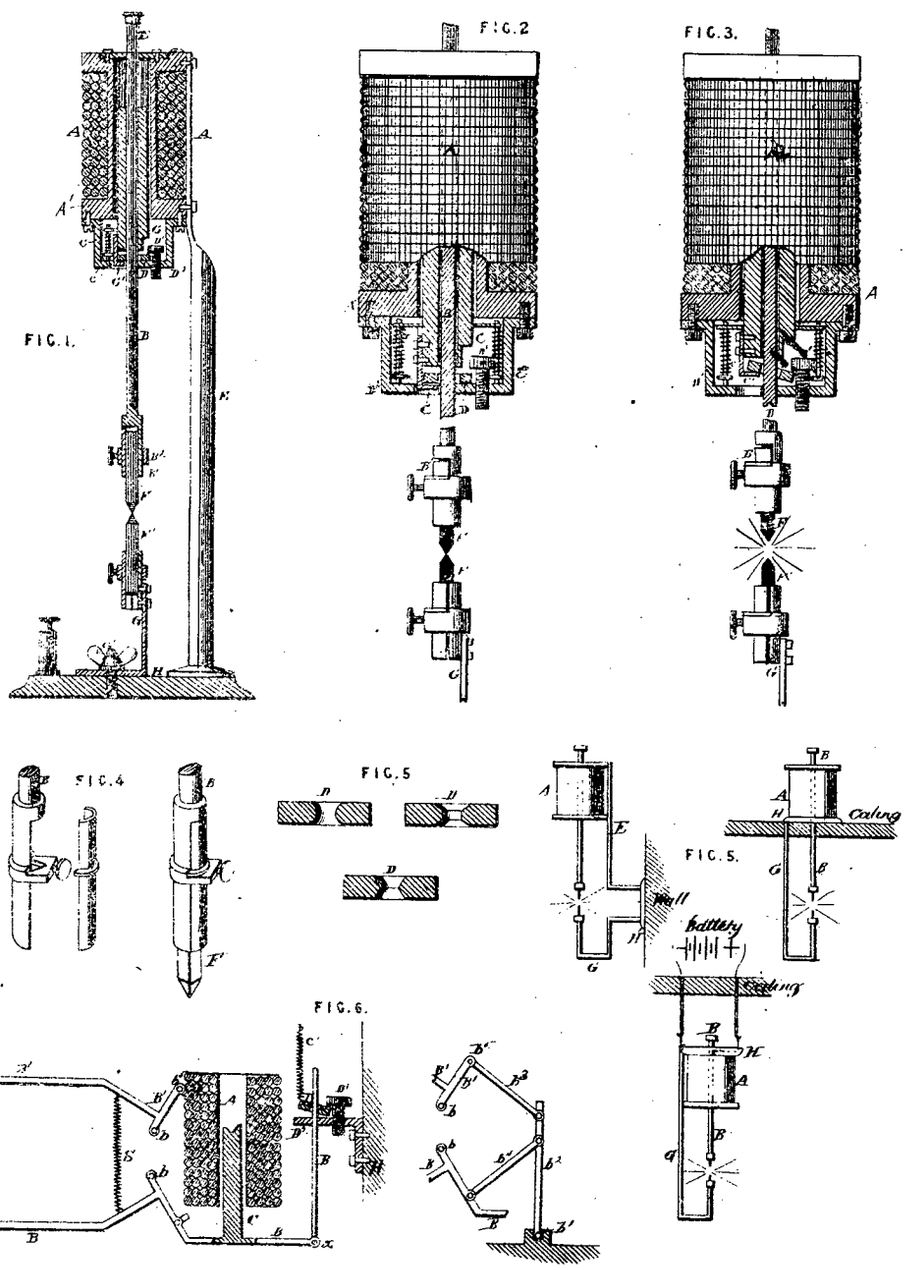

This is the Sheet of Drawings marked F, referred to in the annexed Letters of Registration granted to the Anglo-American Electric Light Company Limited this seventeenth day of October A. D. 1888

(Sig. 357.) Augustus Loftus

PHOTO-LITHOGRAPHED AT THE GOVT. PRINTING OFFICE, SYDNEY, NEW SOUTH WALES.

(SHEET 7.)

[881]

H.

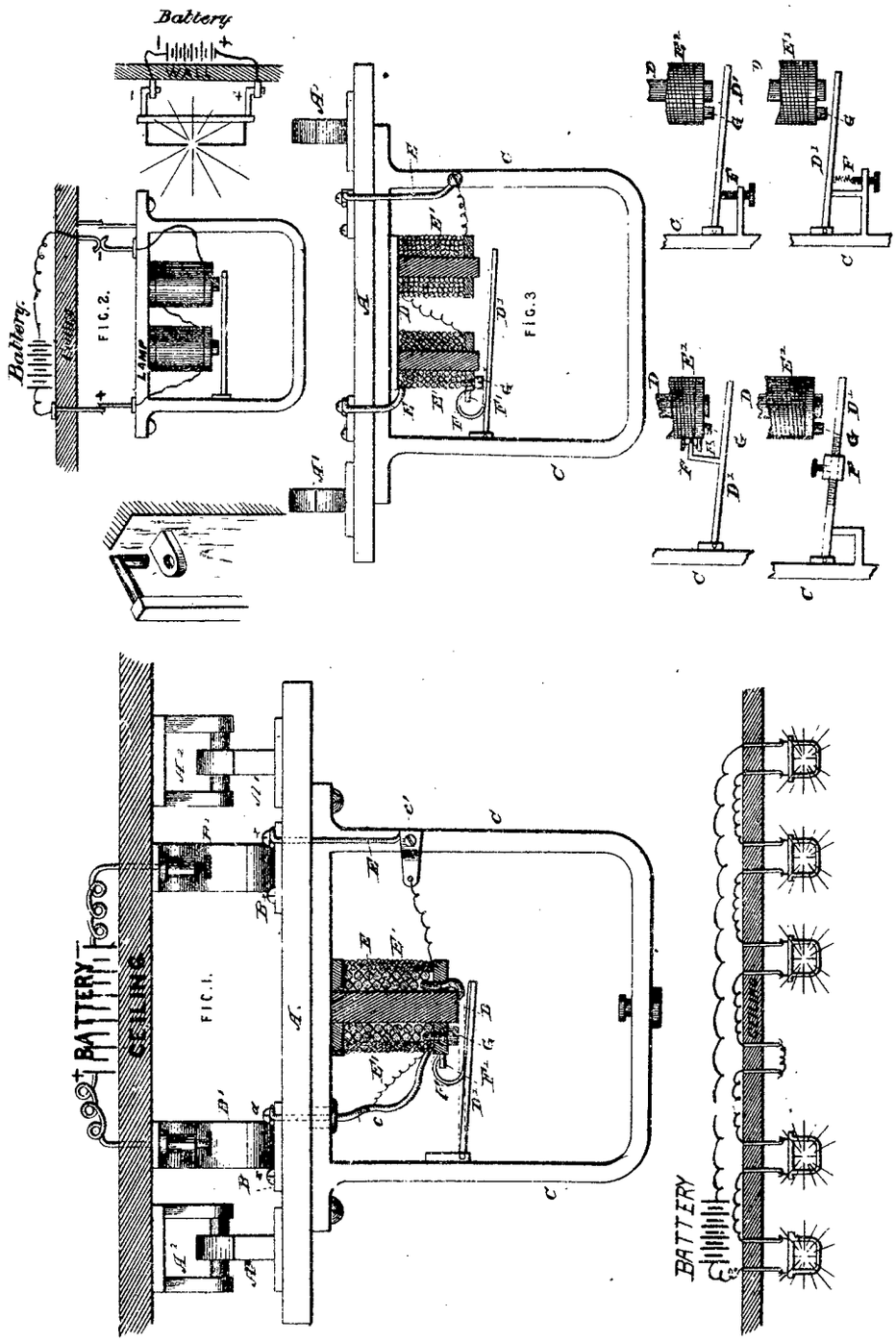

(Sig: 357-)

This is the Sheet of Drawings marked H. referred to in the annexed Letters of Registration granted to the Anglo-American Electric Light Company Limited this fourteenth day of October A.D. 1880.

Augustus Loftus

PHOTO-LITHOGRAPHED AT THE GOVT. PRINTING OFFICE
SYDNEY, NEW SOUTH WALES.

I. [881]

(SHEET 8)

Fig. 1.

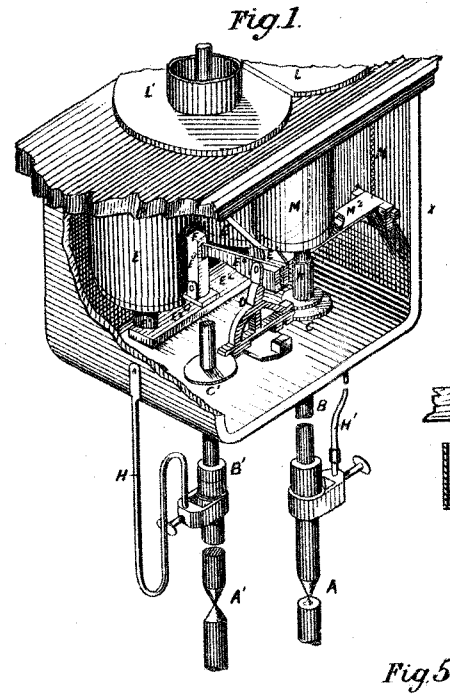

Fig. 2.

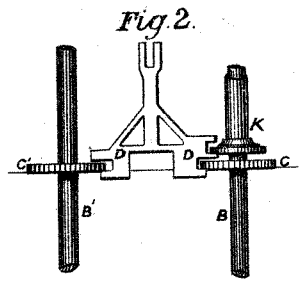

Fig 3.

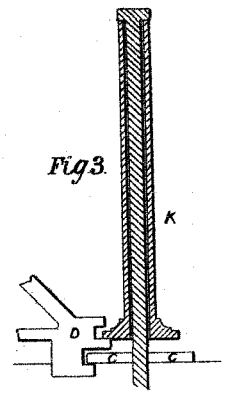

Fig 4.

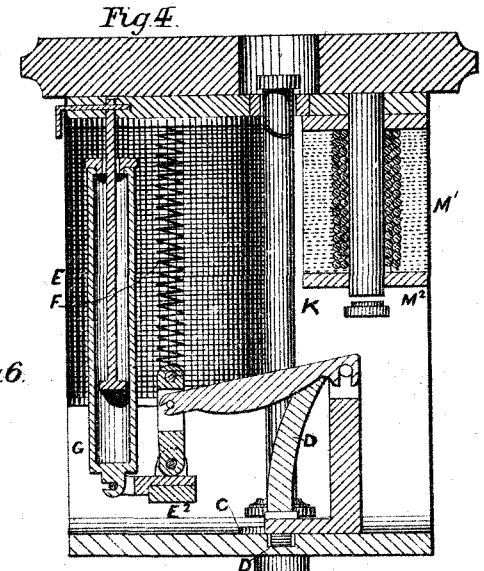

Fig 5.

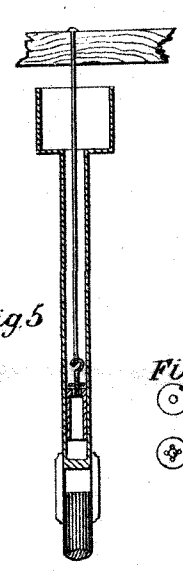

Fig 6.



Fig. 1a

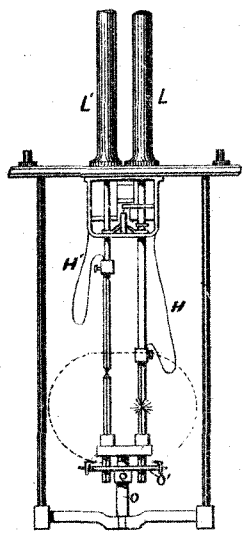

Fig. 7.

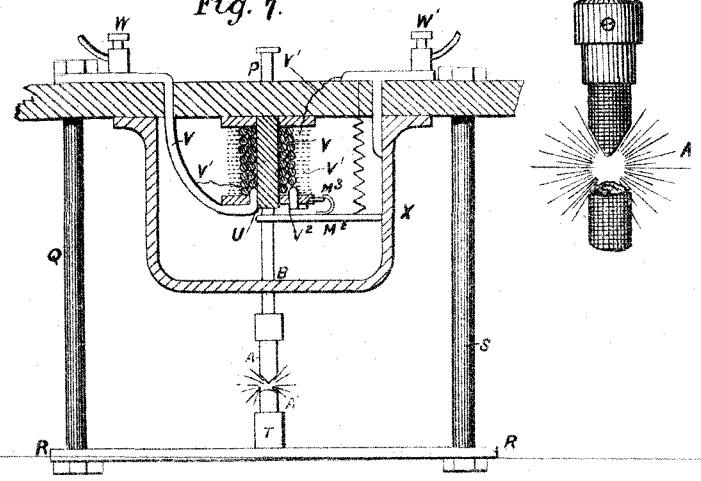

This is the Sheet of Drawings marked "I" referred to in the annexed Letters of Registration granted to the Anglo-American Electric Light Company (Limited) this nineteenth day of October A.D. 1880.

(Sig: 357-) "Augustus Loftus."

PHOTO-LITHOGRAPHED AT THE GOVT. PRINTING OFFICE,
SYDNEY, NEW SOUTH WALES.

(SHEET 6)

G.

[881]

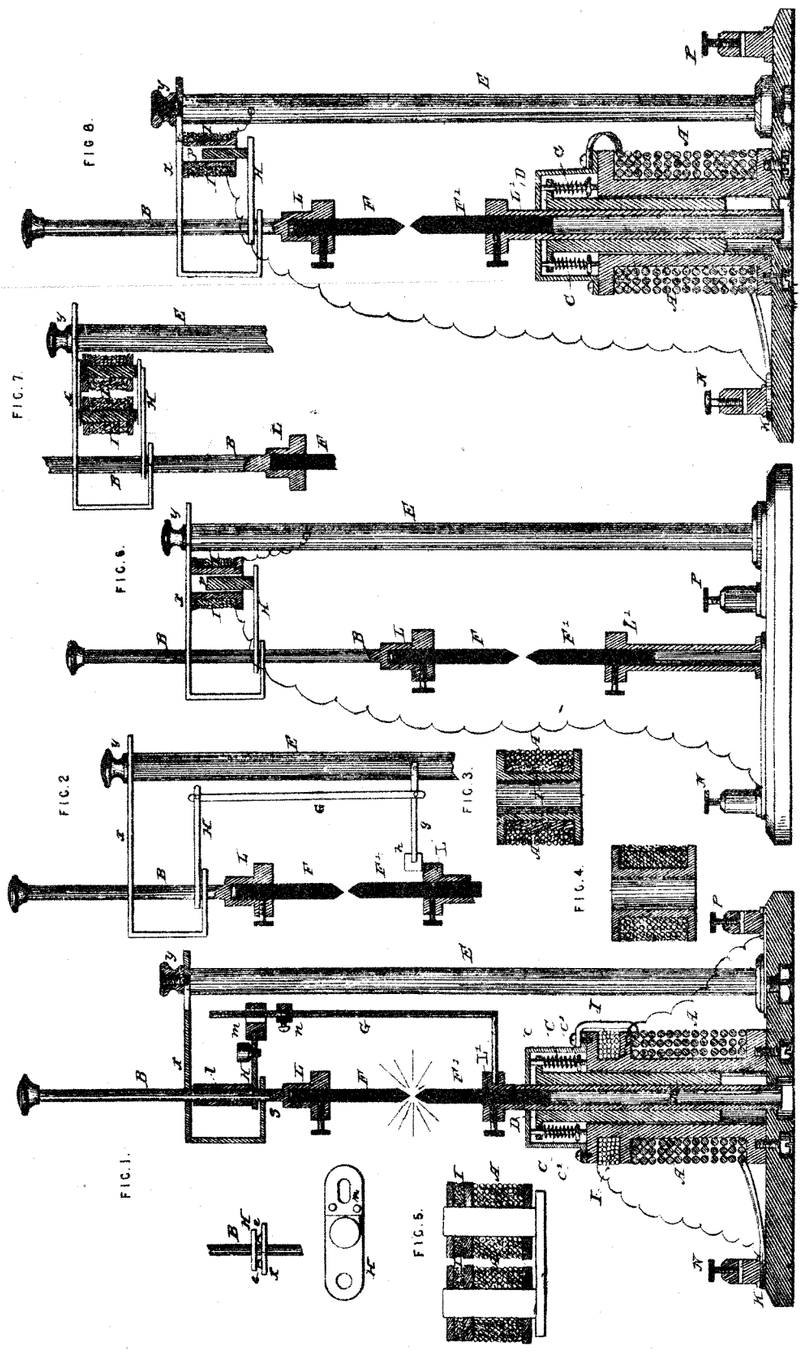

This is the Sheet of Drawings marked "G" referred to in the annexed Letters of Registration granted to the Anglo-American Electric Light Company Limited this nineteenth Day of October A.D. 1880.

Augustus Loftus

PHOTO-LITHOGRAPHED AT THE GOVT PRINTING OFFICE, SYDNEY, NEW SOUTH WALES.

(Sig: 357)

Fig. 1.

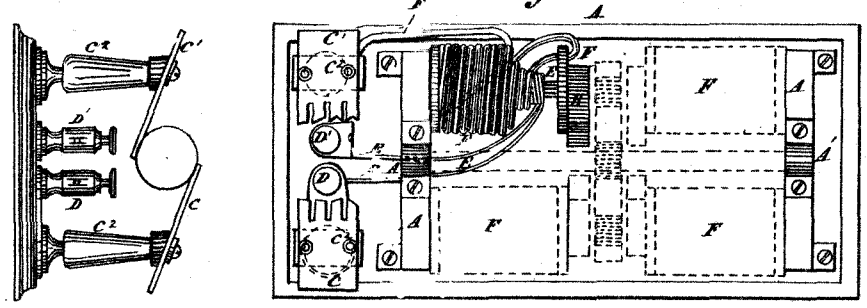

Fig. 3.

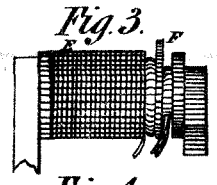

Fig. 4.

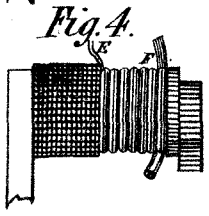

Fig. 2.

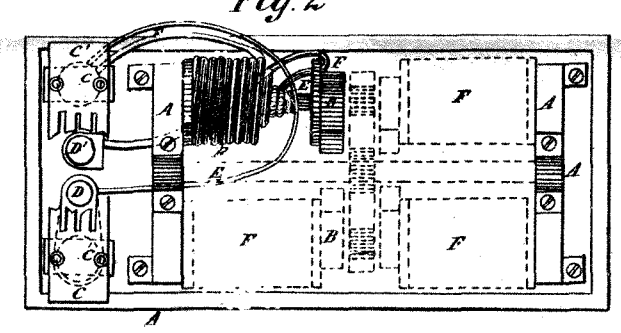

Fig. 5.

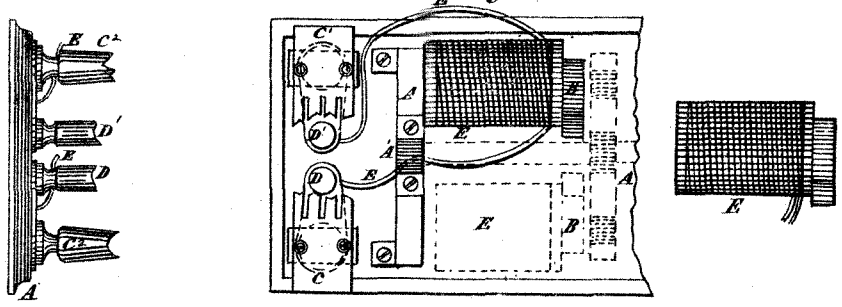

This is the Sheet of Drawings marked E. referred to in the annexed Letters of Registration granted to the Anglo-American Electric Light Company (Limited) this nineteenth day of October A.D. 1880.

Augustus Loftus.

(Sig. 357.)

PHOTO-LITHOGRAPHED AT THE GOVT. PRINTING OFFICE, SYDNEY, NEW SOUTH WALES.

A.D. 1880, 19*th October*. No. 882.

IMPROVEMENTS IN BOTTLES AND STOPPERS, AND IN APPARATUS FOR FILLING OR CHARGING THE SAME.

LETTERS OF REGISTRATION to Henry Barrett, for Improvements in Bottles and Stoppers, and in Apparatus for filling or charging the same.

[Registered on the 20th day of October, 1880, in pursuance of the Act 16 Vic. No. 24.]

BY His Excellency the Right Honorable Sir Augustus William Frederick Spencer Loftus (commonly called Lord Augustus Loftus), Knight Grand Cross of the Most Honorable Order of the Bath, a Member of Her Majesty's Most Honorable Privy Council, Governor and Commander-in-Chief of the Colony of New South Wales and its Dependencies.

TO ALL TO WHOM THESE PRESENTS SHALL COME, greeting:

WHEREAS Henry Barrett, of Hampton, in the County of Middlesex, England, hath by his Petition humbly represented to me that he is the author or designer of a certain invention or improvement in manufactures, that is to say, of an invention for "Improvements in Bottles and Stoppers, and in Apparatus for filling or charging the same," which is more particularly described in the amended specification and the sheet of drawings which are hereunto annexed; and that he, the said Petitioner, hath deposited with the Honorable the Treasurer of the said Colony of New South Wales the sum of Twenty Pounds sterling, for defraying the expense of granting these Letters of Registration, as required by the Act of Council, sixteenth Victoria, number twenty-four; and hath humbly prayed that I would be pleased to grant Letters of Registration, whereby the exclusive enjoyment and advantage of the said invention or improvement might be secured to him for a period of fourteen years: And I, being willing to give encouragement to all inventions and improvements in the arts or manufactures which may be for the public good, and having received a report favourable to the prayer of the said Petition, from competent persons appointed by me to examine and consider the matters stated therein and to report thereon for my information, am pleased, with the advice of the Executive Council, and in exercise of the power and authority given to me by the said Act of Council, to grant, and do by these Letters of Registration grant unto the said Henry Barrett, his executors, administrators, and assigns, the exclusive enjoyment and advantage of the said invention or improvement, for and during the term of fourteen years from the date hereof; to have, hold, and exercise unto the said Henry Barrett, his executors, administrators, and assigns, the exclusive enjoyment and advantage thereof, for and during and unto the full end and term of fourteen years from the date of these presents next and immediately ensuing, and fully to be complete and ended: Provided always, that if the said Henry Barrett shall not, within three days after the granting of these Letters of Registration, register the same in the proper office in the Supreme Court, at Sydney, in the said Colony of New South Wales, then these Letters of Registration, and all advantages whatsoever hereby granted, shall cease and become void.

In witness whereof, I have hereunto set my sign manual, and have caused the present Letters of Registration to be sealed with the seal of the said Colony of New South Wales, at Government House, Sydney, in New South Wales, this ninteenth day of October, in the year of our Lord one thousand eight hundred and eighty.

[L.S.] AUGUSTUS LOFTUS.

SPECIFICATION

Improvements in Bottles and Stoppers, and in Apparatus for filling or charging same.

SPECIFICATION of HENRY BARRETT, of Hampton, in the County of Middlesex, England, for Improvements in Stoppers for Bottles, and in contrivances to be used therewith.

THIS invention relates to the improvements hereinafter described and represented in the accompanying drawing in internal stoppers for bottles, for containing aerated or gaseous liquids (applicable also for bottles containing beer and other malt liquors), and in the apparatus employed for filling or charging the said bottles. When stoppers are used, which consist of a hollow sphere of glass, earthenware, or other like vitreous material having inherently a greater specific gravity than water, I provide the filling or charging apparatus with a vertical tube, the upper end of which is open to the atmosphere or provided with a piston, and the lower end of which may be slightly bell-mouthed and lined with rubber or other suitable material. In figure 2 of the accompanying drawing *c* shows a central depression, and *d* the tube for raising the stopper when the bottle is filled. The bottle *e* to be filled is placed in the filling apparatus of ordinary construction, and the said tube *d* is passed down into the bottle as shown in figure 2, until the lower open mouth *f* of the tube *d* rests against and fits upon the surface of the stopper *g*, and the bottle is filled in the usual manner. The said tube *d* is then quickly raised out of the bottle, and will lead or draw with it the stopper into its seat in the neck.

The lowering and raising of the tube may be effected by a handle or treadle suitably arranged for the purpose, and needs no further description.

When the hereinbefore described floating stoppers are employed for closing bottles containing beer or other malt liquor, the required pressure for keeping the stopper against its seat in the bottle is obtained by introducing a small quantity of compressed air into the bottle, or into the cask from which the beer is drawn for bottling.

My improvements also relate to a novel construction of bottle and of internal stopper to be used therewith, whereby I am enabled to employ a stopper of hard non-elastic material of larger diameter than the opening of the mouth of the bottle, and to introduce such stopper into and remove it from the interior of the bottle as required. In the drawing, figure 7 is a section of a bottle constructed according to this part of my invention; figure 8 similar view, showing the stopper applied thereto; figure 5, plan of the mouth of the bottle.

In carrying out this part of my invention, the stopper is formed of a circular disc, *k* (as shown in plan and side views at figures 9 and 10) of suitable hard material, such as pearl, ivory, or glass, but preferably pearl, two of the sides of the said disc being in some cases cut or formed straight as shown in figure 11, so as to give the stopper somewhat of an elliptical shape. The bottle A to be used with this stopper is formed as shown at figure 7, with an interior shoulder in the neck, with the annular groove *m* in the shoulder, a slot or groove *l* being formed vertically through the said annular grooved shoulder on each side; the diameter of the interior of the neck of the bottle below the shoulder is slightly in excess of the diameter of the hereinbefore described disc *k* forming the stopper (or of the larger diameter when the stopper is formed of the shape shown in figure 11), while the diameter of the stopper is slightly less than the diameter of the neck of the bottle between the bottom of the two hereinbefore described grooves *l*. From this construction it will be evident that if the stopper *k* be taken edgewise in a vertical direction, it can be passed into the interior of the bottle through the hereinbefore described slots or grooves *l*, the width of the slots *l* being slightly greater than the thickness of the stopper *k*.

The stopper *k* having been introduced into the bottle, I then place in the annular groove *m* the seating for the stopper to bear against. This seating I have found it advantageous to make of a ring of a suitable hard material, such as ivory, bone, vulcanite, or glass, a thin ring of compressed cork being combined with or cemented to each side of the hard ring; the circumference of the said seating being of the same shape as that of the hereinbefore described stopper shown in figure 11, so that it may be passed into the bottle through the hereinbefore described slots *l l*, and is then placed (by means of a suitable tool) into the annular groove *m*, and cemented in position, care being taken that the shorter diameter of the ring is placed transversely to the slots *l l* in the annular groove. By these means I obtain a yielding seat for the stopper *k* to bear against, and also a yielding seat to form an air-tight joint betweeen the ring and the bottle.

It will be understood that in place of the compound elastic seating, such as is above referred to, a simple seating such as that made of vulcanised india-rubber may be used as a seating with my improved disc stopper.

Instead of the bottle being formed with the slots *l l* as hereinbefore described, the disc stopper when made of heat-resisting material, may be introduced into the bottle before the latter is completed, the mouth of the bottle being afterwards contracted, but I do not prefer this method. I may also employ a disc of smaller diameter than the opening of the neck of the bottle, in which case the seating in the bottle must be such that it will prevent the disc passing out of the bottle; or the mouth of the bottle may be diminished by any suitable filling.

A bottle provided with the hereinbefore described flat or disc stopper *k* may be filled by being inverted in the manner usual with bottles having internal non-floating stoppers, and the stopper will fall flatwise on to its seat, the neck of the bottle serving as a guide. Or it may in some cases be found advantageous to provide the centre of the stopper with a small piece of steel or other suitable metal, and the end of the air pipe of the filling machine is provided with a small magnet, by which means the magnet will, during the filling of the bottle, attract the stopper, which will thus be drawn into its seat by the withdrawal of the air-tube from the bottle.

The bottle may also be filled in an upright non-inverted position, in which case instead of an air tube I employ a rod with a magnet, the bottom of the bottle being formed of such a shape that the stopper will fall to the centre thereof in a similar manner to that hereinbefore described for the hollow floating stopper, and shown at figure 2.

Instead of using my improved flat or disc stopper separately from its elastic seating, I find that they may be advantageously used in permanent combination, forming a compound stopper and seating.

One

Improvements in Bottles and Stoppers, and in Apparatus for filling or charging same.

One form of this modification of my improved stopper and seating is shown in plan and section at figures 10^a and 11^a of the accompanying drawing. This stopper is constructed of a ring of vulcanised india-rubber, a^1, formed with a slit around its interior, in which is placed a disc b^1 of glass or other suitable material; the disc b^1 is preferably made somewhat elliptical as shown by the dotted lines figure 10^a, to allow of the stopper being more easily forced through the neck of the bottle. A great advantage of this construction of stopper is that no elastic seating is required in the neck of the bottle, which requires to be formed with merely a shoulder for the elastic ring a^1 to bear against.

My improvements also relate to an improved floating stopper which is shown in plan, elevation, and section in figures 12, 13, and 14 of the accompanying drawing, such floating stoppers being formed of a disc of several layers of compressed cork *n*, a disc *o* of suitable material, such as pearl, being fixed on the surfaces of the cork disc *n*, the upper covering disc being smaller than the surface of the cork, so as to leave a rim of cork all round (as shown in plan at figure 12) which forms an elastic seating. This stopper is provided with a small piece of steel, *p*, in the centre, if a magnet is to be employed in filling the bottle. The interior of the mouth of the bottle to be used with this construction of stopper is, as shown in figure 15, formed conically with an annular groove *r* therein, and into the mouth (after the stopper has been placed in the bottle) I place a hollow cone *s* made of suitable material such as is now known in the trade as lionite, which will soften under the effect of heat, and while the material is still soft, or by means of a heated tool, I turn the upper edge of this cone into the annular groove *r* in the neck of the bottle; the bottom edge of this cone thus forms a projecting shoulder, against which the hereinbefore described rim of cork bears so as to form a tight joint when the bottle is closed. Or the bottom of this cone may be provided with an elastic seat, in which case the stopper employed may be a ball or disc of glass or other suitable material.

A bottle provided with a stopper constructed according to this part of my invention may be filled by employing a rod with a magnet as hereinbefore described, it being understood that for floating stoppers it is not necessary that the rod should extend to the bottom of the bottle.

If, however, the stopper is not provided with steel, the bottle may be filled by the use of a hollow bell-mouthed tube as hereinbefore described with reference to the hollow spherical floating stopper, the bottom of the bottle being formed accordingly.

An important advantage arising from the employment of the hereinbefore described flat stoppers is that the stopper does not roll to the mouth of the bottle while the contents are being discharged, or should it do so it will rest edgewise, and will therefore not interfere with the discharge of the liquid, as is so often the case with internal stoppers as at present constructed.

Lastly, my invention relates to the construction and employment of what may be termed a partly flexible disc stopper, which is flexible in one direction and stiff in the transverse direction. Figures 16 and 17 show a horizontal and a vertical section respectively of a stopper of this construction.

In carrying out this part of my invention, I take a disc *t* of cork or india-rubber; on this disc *t* I place a number of lengths of wire or rods, or strips of metal *u*, laid side by side and in the same direction as shown in figure 16; over these pieces of wire or strips of metal *u*, I lay a disc of any suitable gum which will soften under the effect of heat, and over the disc of gum I superpose a disc *v* of cork or india-rubber. I then subject the whole to pressure, whereupon the pieces or the strips of metal will become embedded in and covered by the gum, and the discs of cork or india-rubber will be caused to firmly adhere together.

Or I produce a similar stopper by taking a disc of vulcanised india-rubber formed or perforated with holes horizontally through it, into which holes I pass the wires or strips.

By this means I obtain a disc or stopper which may be rolled up in the direction parallel with the direction in which the wires *u* are placed, but the disc will be rigid in the other direction. The bottle to be used with this stopper is formed with an internal flange or shoulder as hereinbefore described, and the stopper is made of greater diameter than the opening of the mouth of the bottle, and somewhat less than the diameter of the interior of the neck below the shoulder.

To introduce the stopper, it is simply partly rolled up as hereinbefore described, and may then be passed into the bottle, and when below the shoulder it will expand or may be expanded into its flat or normal position.

In filling a bottle provided with this construction of stopper, I employ either the hollow rod or the magnetic rod hereinbefore described, but in the latter case it will be understood that the stopper must be provided with a piece of steel in the centre, or otherwise rendered subject to the action of the magnet.

I sometimes employ a disc of vulcanite or like material, which being heated may be rolled so as to allow of introducing it into the bottle; it is then strengthened in any suitable manner, and will then recover its normal or flat shape, or if a brittle material be used it must be afterwards strengthened and flattened out into its normal position.

It will be understood that when a stopper of a non-yielding material is employed, the bottle must be furnished with an elastic seating for the stopper to bear against.

Having thus described the nature of my said invention, and the best means with which I am acquainted for carrying the same into effect, I would have it understood that I do not confine myself to the precise details herein laid down and shown in the accompanying drawing, as the same may be varied without departing from the peculiar character of my invention, but what I claim is—

Firstly—The use in bottle filling or charging machines of a vertical tube for raising the stopper to its seat when the bottle is filled as hereinbefore described, and represented in figure 2 of the accompanying drawing.

Secondly—The use for stopping bottles of an internal bottle stopper, consisting of a circular or slightly elliptical disc or its equivalent of suitable material, such as glass, porcelain, ivory, or pearl, as hereinbefore described.

Thirdly—The improved internal bottle stopper forming a combined disc stopper and seating, consisting of a ring of vulcanised india-rubber surrounding a disc of suitable hard material as hereinbefore described, and represented in figures 10^a and 11^a of the accompany drawing.

Fourthly—

Improvements in Bottles and Stoppers, and in Apparatus for filling or charging same.

Fourthly—The improved floating stopper formed of a disc of compressed cork, on each side of which is placed a disc of suitable hard material, and provided in the centre with a piece of steel in combination with a seating adapted to the interior of the mouth of the bottle, as hereinbefore described, and represented in figures 12, 13, 14, and 15 of the accompanying drawing.

Fifthly—The method of stopping bottles by employing stoppers provided centrally with a piece of steel or other metal attracted by a magnet, and bringing them to their seat in the neck of the bottle by the employment of a rod provided with a magnet as hereinbefore described.

Sixthly—The construction and employment of the flexible disc stopper as hereinbefore described, and represesented in figures 16 and 17 of the accompanying drawing.

In witness whereof, I, the said Henry Barrett, have hereto set my hand and seal.

HENRY BARRETT,
By his Agent,
EDWD. WATERS.

This is the amended specification referred to in the annexed Letters of Registration granted to Henry Barrett, this ninteenth day of October, A.D. 1880.

AUGUSTUS LOFTUS.

REPORTS.

Sir, Sydney, 30 June, 1880.

On examination of the documents transmitted for our report under your blank cover communication of the 21st instant, we are of opinion that the only apparent novelties detailed in Mr. Henry Barrett's specification are—the application of a tube, a magnet, and a disc for stoppering bottles containing aerated liquids, the remainder of his specification and claim embodying methods and appliances either registered or in ordinary use in this Colony. We therefore do ourselves the honor to state that we are of opinion that the prayer of the Petitioner cannot be granted in its present form.

We have, &c.,
GOTHER K. MANN.
ROBERT GEO. MASSIE.

The Principal Under Secretary.

Sir, Sydney, 30 July, 1880.

We do ourselves the honor to report that, having reconsidered Mr. Henry Barrett's application for Letters of Registration, in conjunction with Mr. Edward Waters' letter of the 13th instant, we find no grounds for deviating from the opinion expressed by us in our report of the 30th June last; the only apparent novelties in Mr. Barrett's specification being the application of a tube, a magnet, and a disc for stoppering bottles. If Mr. Waters submits Mr. Barrett's revised specification and claim in due form, the Board will be in a position to report finally thereon.

We have, &c.,
GOTHER K. MANN.
ROBERT GEO. MASSIE.

The Principal Under Secretary.

Sir, Sydney, 23 August, 1880.

Adverting to your blank cover communication of the 14th instant, No. 6,756, transmitting Mr. F. Barrett's revised specification and claim, we do ourselves the honor to state that we are of opinion that Letters of Registration may now be granted in accordance therewith.

We have, &c.,
GOTHER K. MANN.
ROBERT GEO. MASSIE.

The Principal Under Secretary.

[Drawings—one sheet.]

Fig. 2.

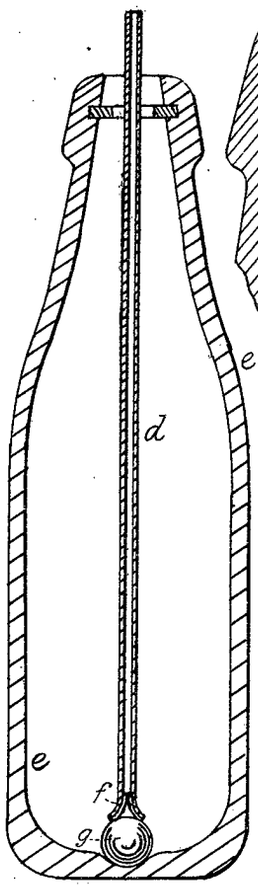

Fig. 4.

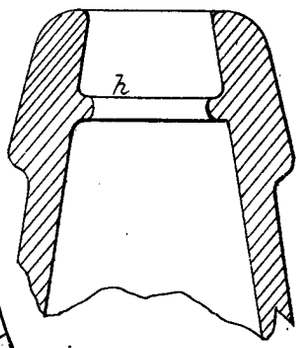

Fig. 7.

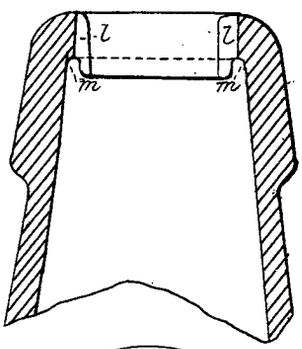

Fig. 15.

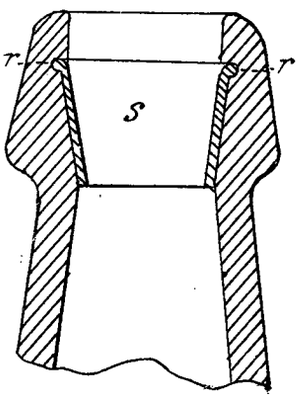

Fig. 6.

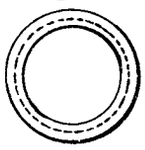

Fig. 5.

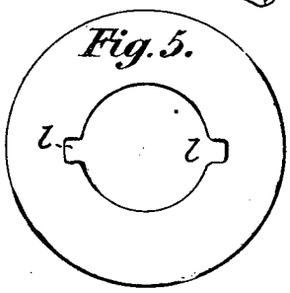

Fig. 12.

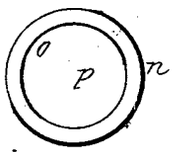

Fig. 3.

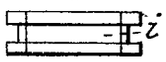

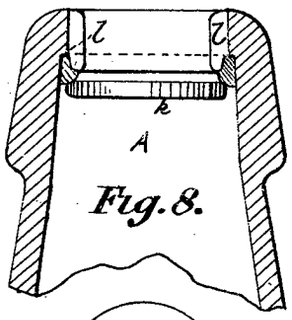

Fig. 8.

Fig. 13.



Fig. 14.



Fig. 1.

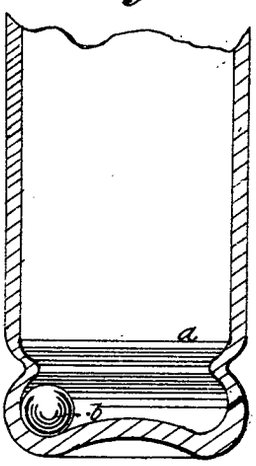

Fig. 10a.

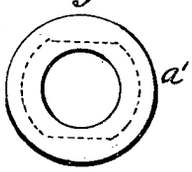

Fig. 9.



Fig. 16.

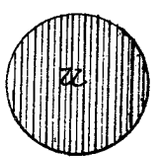

Fig. 10.

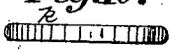

Fig. 11a.

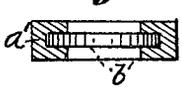

Fig. 11.



Fig. 17.

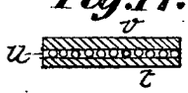

This is the Sheet of Drawings referred to in the annexed Letters of Registration, granted to Henry Barrett, this nineteenth day of October; A.D. 1880. Augustus Loftus.

(Sig: 357-)

A.D. 1880, 19*th October*. No. 883.

IMPROVEMENT IN STONE-BREAKING MACHINES.

LETTERS OF REGISTRATION to Arthur Hope, for an Improvement in Stone-breaking Machines.

[Registered on the 19th day of October, 1880, in pursuance of the Act 16 Vic. No. 24.]

BY HIS EXCELLENCY THE RIGHT HONORABLE SIR AUGUSTUS WILLIAM FREDERICK SPENCER LOFTUS (commonly called LORD AUGUSTUS LOFTUS), Knight Grand Cross of the Most Honorable Order of the Bath, a Member of Her Majesty's Most Honorable Privy Council, Governor and Commander-in-Chief of the Colony of New South Wales and its Dependencies.

TO ALL TO WHOM THESE PRESENTS SHALL COME, greeting:

WHEREAS ARTHUR HOPE, of Yarra Bank South, near Melbourne, in the Colony of Victoria, engineer, hath by his Petition humbly represented to me that he is the author or designer of a certain invention or improvement in manufactures, that is to say, of an invention entitled an "Improvement in Stone-breaking Machines," which is more particularly described in the specification and the sheet of drawings which are hereunto annexed; and that he, the said Petitioner, hath deposited with the Honorable the Treasurer of the said Colony of New South Wales the sum of Twenty Pounds sterling, for defraying the expense of granting these Letters of Registration, as required by the Act of Council, sixteenth Victoria, number twenty-four; and hath humbly prayed that I would be pleased to grant Letters of Registration, whereby the exclusive enjoyment and advantage of the said invention or improvement might be secured to him for a period of fourteen years: And I, being willing to give encouragement to all inventions and improvements in the arts or manufactures which may be for the public good, and having received a report favourable to the prayer of the said Petition, from competent persons appointed by me to examine and consider the matters stated therein and to report thereon for my information, am pleased, with the advice of the Executive Council, and in exercise of the power and authority given to me by the said Act of Council, to grant, and do by these Letters of Registration grant unto the said Arthur Hope, his executors, administrators, and assigns, the exclusive enjoyment and advantage of the said invention or improvement, for and during the term of fourteen years from the date hereof; to have, hold, and exercise unto the said Arthur Hope, his executors, administrators, and assigns, the exclusive enjoyment and advantage thereof, for and during and unto the full end and term of fourteen years from the date of these presents next and immediately ensuing, and fully to be complete and ended: Provided always, that if the said Arthur Hope shall not, within three days after the granting of these Letters of Registration, register the same in the proper office in the Supreme Court, at Sydney, in the said Colony of New South Wales, then these Letters of Registration, and all advantages whatsoever hereby granted, shall cease and become void.

In witness whereof, I have hereunto set my sign manual, and have caused the present Letters of Registration to be sealed with the seal of the said Colony of New South Wales, at Government House, Sydney, in New South Wales, this nineteenth day of October, in the year of our Lord one thousand eight hundred and eighty.

[L.S.] AUGUSTUS LOFTUS.

A.D. 1880. No. 883.

Improvement in Stone-breaking Machines.

SPECIFICATION of ARTHUR HOPE, of Yarra Bank South, near Melbourne, in the Colony of Victoria, engineer, for an invention entitled an "Improvement in Stone-breaking Machines."

MY invention has been designed for the purpose of multiplying the crushing motion of the moving jaw or jaws of stone-breaking machines at the least possible expense in construction and working. By it I am enabled to give either a double or treble motion to such jaws at each revolution of the crank-shaft, the result of which is that the discharge is very rapid, and the stone passing through the machine is of a better quality, having less dust when road-metal is required to be produced, and capable of adjustment so as to produce more screenings when required. The contrivances by which I am enabled to accomplish this, and in which my invention consists, are a novel construction of toggle and of toggle-face. According to my invention each of my toggles has a single curved face to the pitman or pendant lever (which is common), and a double-curved face at the other end, which is not common. This will be readily understood on reference to my drawings, in which figs. 1 and 2 show side-sectional view and plan of my toggles in position. A B are the toggles, and A^1 and B^1 the double-curved faces against which they work. C is the moving jaw, D the pendant-lever or pitman, and E the back bolster. Fig. 3 shows my toggles and toggle-faces, with the projecting curves on the toggles instead of on the toggle-faces, as in figs. 1 and 2, but otherwise there is no difference between them. As here shown the machine will produce good road metal with little screenings.

Fig. 4 shows a modification of my invention, in which the projection in the centre of the toggle A is deepened so as to fit into the hollow *a*. This gives a modified action to the jaw C, and produces more screenings.

Figs. 5, 6, and 7 show respectively plan, longitudinal section, and side elevation of a stone-breaking machine constructed according to my invention, and in which there is nothing new, except the parts I have already referred to. C is the moving jaw, D the pendant lever, E the back bolster, F the wedge-piece, which is screwed up by screw F^1 as required, and between which and the back bolster are adjusting plates, as is common. G G are cotters regulated by nuts and screws, as shown in fig. 5.

In figs. 5, 6, and 7 the machine is shown so set as to most advantageously break ordinary road metal with the least amount of screenings, giving a double motion to the jaw C at each revolution of the crank-shaft.

If the toggles and toggle-faces be made as shown in fig. 4, the result will be a treble (instead of a double) motion to the jaw C, and the produce will consist very largely of small metal and screenings.

Having thus described the nature of my invention and the manner of performing same, I woul have it clearly understood that I do not claim any novelty in those mechanical contrivances which I have herein referred to and illustrated in my drawings, except in the toggles and toggle-faces; but what I claim as my improvement in stone-breaking machines is—

The peculiar construction of toggles and toggle-faces combined and arranged in the manner and for the purpose herein described and explained, and as illustrated in my drawings hereto annexed (more especially in figs. 1, 2, and 3.)

In witness whereof, I, the said Arthur Hope, have hereto set my hand and seal, this twenty-sixth day of August, one thousand eight hundred and eighty.

ARTHUR HOPE.

Witness—
EDWD. WATERS,
Melbourne, Patent Agent.

This is the specification referred to in the annexed Letters of Registration granted to Arthur Hope, this nineteenth day of October, A.D. 1880.

AUGUSTUS LOFTUS.

REPORT.

Sir, Sydney, 15 September, 1880.

We do ourselves the honor to state that we find no objection to the issue of Letters of Registration in favour of Mr. Arthur Hope for an "Improvement in Stone-breaking Machines," in accordance with Mr. Hope's Petition, specification, drawings, and claim, transmitted for our report under your blank cover communication of the 2nd instant, No. 7,531.

We have, &c.,
GOTHER K. MANN.
JAMES BARNET.

The Under Secretary of Justice.

[Drawings—one sheet.]

Fig. 1

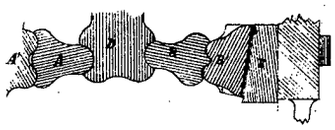

Fig. 3

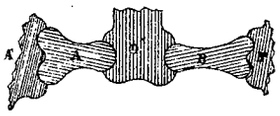

Fig 2

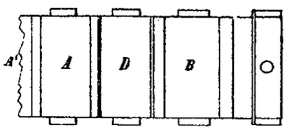

Fig. 4

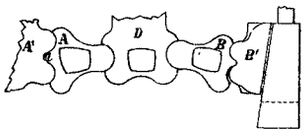

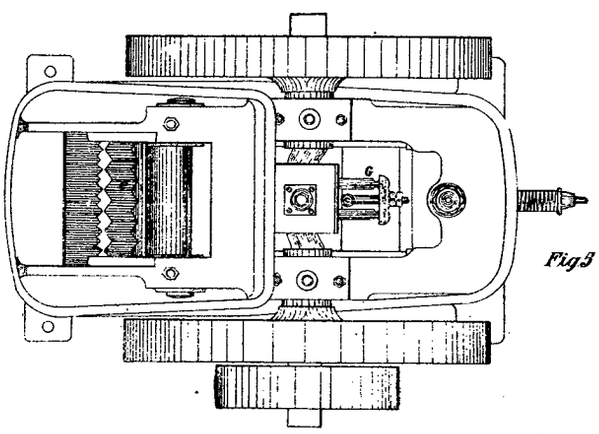

Fig 3

HOPE'S PATENT

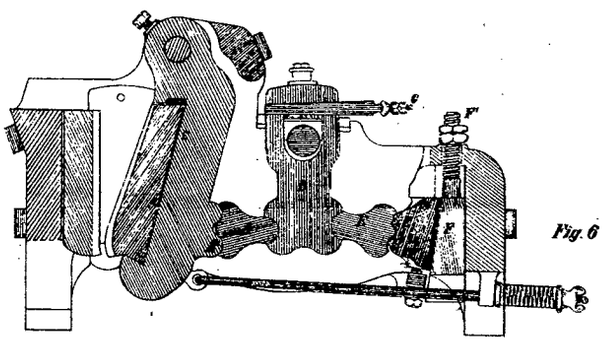

Fig. 6

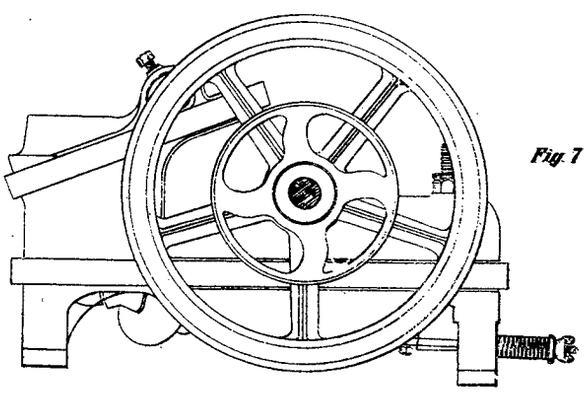

Fig. 7

This is the sheet of Drawings referred to in the annexed Letters of Registration granted to Arthur Hope this nineteenth day of October A.D. 1880.

(Sig. 357)

Augustus Loftus

PHOTO-LITHOGRAPHED AT THE GOVT. PRINTING OFFICE, SYDNEY, NEW SOUTH WALES.

A.D. 1880, 19*th October*. No. 884.

IMPROVEMENTS IN KNOT-TYERS FOR GRAIN-BINDERS.

LETTERS OF REGISTRATION to Ole O. Storle, for Improvements in Knot-tyers for Grain-binders.

[Registered on the 19th day of October, 1880, in pursuance of the Act 16 Vic. No. 24.]

BY His Excellency the Right Honorable Sir Augustus William Frederick Spencer Loftus (commonly called Lord Augustus Loftus), Knight Grand Cross of the Most Honorable Order of the Bath, a Member of Her Majesty's Most Honorable Privy Council, Governor and Commander-in-Chief of the Colony of New South Wales and its Dependencies.

TO ALL TO WHOM THESE PRESENTS SHALL COME, greeting:

WHEREAS Ole O. Storle, of Milwaukee, Wisconsin, in the United States of America, hath by his Petition humbly represented to me that he is the author or designer of a certain invention or improvement in manufactures, that is to say, of an invention entitled "Improvements in Knot-tyers for Grain-binders," which is more particularly described in the specification and the sheet of drawings which are hereunto annexed; and that he, the said Petitioner, hath deposited with the Honorable the Treasurer of the said Colony of New South Wales the sum of Twenty Pounds sterling, for defraying the expense of granting these Letters of Registration, as required by the Act of Council, sixteenth Victoria, number twenty-four; and hath humbly prayed that I would be pleased to grant Letters of Registration, whereby the exclusive enjoyment and advantage of the said invention or improvement might be secured to him for a period of fourteen years: And I, being willing to give encouragement to all inventions and improvements in the arts or manufactures which may be for the public good, and having received a report favourable to the prayer of the said Petition, from competent persons appointed by me to examine and consider the matters stated therein and to report thereon for my information, am pleased, with the advice of the Executive Council, and in exercise of the power and authority given to me by the said Act of Council, to grant, and do by these Letters of Registration grant unto the said Ole O. Storle, his executors, administrators, and assigns, the exclusive enjoyment and advantage of the said invention or improvement, for and during the term of fourteen years from the date hereof; to have, hold, and exercise unto the said Ole O. Storle, his executors, administrators, and assigns, the exclusive enjoyment and advantage thereof, for and during and unto the full end and term of fourteen years from the date of these presents next and immediately ensuing, and fully to be complete and ended: Provided always, that if the said Ole O. Storle shall not, within three days after the granting of these Letters of Registration, register the same in the proper office in the Supreme Court, at Sydney, in the said Colony of New South Wales, then these Letters of Registration, and all advantages whatsoever hereby granted, shall cease and become void.

In witness whereof, I have hereunto set my sign manual, and have caused the present Letters of Registration to be sealed with the seal of the said Colony of New South Wales, at Government House, Sydney, in New South Wales, this nineteenth day of October, in the year of our Lord one thousand eight hundred and eighty.

[L.S.]

AUGUSTUS LOFTUS.

SPECIFICATION

Improvements in Knot-tyers for Grain-binders.

SPECIFICATION of OLE O. STORLE, of Milwaukee, Wisconsin, in the United States of America, for an invention entitled "Improvements in Knot-tyers for Grain-binders."

MY invention relates to grain binders, and more particularly to the mechanism for tying the knot, and it consists in the construction and arrangement of devices whereby the ends of the cord which is made to encircle the bundle of grain are drawn together and tied as will be hereinafter more fully set forth.

In order to enable others skilled in the art to which my invention appertains to make and use the same, I will now proceed to describe its construction and operation, referring to the annexed drawings which form a part of this specification, and in which figure 1 is a side elevation of my device; figures 2 and 3 are edge views of the same; figure 4 is a side elevation from the opposite side to that shown in figure 1; figure 5 is a plan view; figures 6, 7, 8, 9, and 10 are detailed views of parts of the machine; figure 11 shows the knot tied by the machine.

A represents the standard or frame, to which all the operating parts are connected, and which is to be firmly secured in any suitable or convenient manner to the main frame of the binder. To this standard at *a* is pivoted a segment B, by which the mechanism for tying is operated. Below the pivot point to the standard A is attached a bracket C, to which is attached a loop or eye *b*, and through this eye passes the lower end of a vertical staff *d*. This shaft passes upward through two concentric tubes D D^1, which are journalled in a head E attached to or formed on the upper end of the standard or frame A. The inside tube D is at or near its lower end provided with a pinion *f*, which has on its lower side a triangular piece, *e*, called a "delay." The lower end of the outside tube D^1 is in like manner provided with pinion f^1, having on its upper face a delay e^1. The pinion f^1 is located immediately above the pinion *f*.

The upper end of the shaft *d* is formed with a hook d^1, and said shaft is feathered in the interior tube D so as to revolve at all times therewith and yet be capable of an up and down movement. This feather also prevents the cord from wedging down at the side of the hook between it and the tube D.

The pinions *f f* engage with a rack *h* on the side of the segment B and which rack meshes with said pinions for about one half of its length (more or less) in the centre. At each end the rack is cut away one half in width for about one fourth of its length. At one end this is done at the top, and at the other end at the bottom of the rack. Corresponding with these reduced portions of the rack delay surfaces *k* k^1 are formed beyond the inner and outer peripheries of the rack, as shown, and the outer end of each delay surface forms a stop *i*.

On this shaft or spindle *d* are secured two collars *n n*, between which is fitted a tube *m* formed with a bar or web *p* connecting it with a vertical rod F, which passes upward through a tubular bearing G on the head E parallel with the shaft or spindle *d*.

From the connecting bar or web *p* projects a stud with roller *s*, which works in an eccentric guide H on the face of the segment B. To the face of the segment is further attached a bracket J, to which is pivoted an arm I, for operating the mechanism for holding both portions of the looped cord after it has passed round the bundle of grain and during the tying process.

This mechanism consists of an arm K pivoted at i^1 to the head E, and having a bent arm L attached to its outer end, the arm I being pivoted to said arm K at its end as shown. The outer portion of the arm L projects over and at right angles to the segment B, and is constructed to form a guide for a plate M, to which the cutter *t* is secured. A pin *v* also projects from said plate or slide M below the cutter, and a spring *w* is arranged at the end of the plate for holding the same with the cutter and pin inwards in position.

Another pin *x* projects downwards from the plate M, for a purpose that will be hereinafter described.

To the head E is attached a shield N which partially encircles the upper end of the tube D^1 and forms a guide for the loop. This shield is inclined as shown, and is attached to the head by means of an elbow which projects down and passes around the shaft *d*, forming a bearing N^1 for the delay *e* to revolve in.

At one side of the head is a rock shaft *y*, which has on one end an arm O projecting in the direction of the cord-holding mechanism above described, and which carries at its end the arm O^1. At the other end of the rock shaft *y* is another arm P, projecting in the opposite direction and provided at its end with a stud and roller *z*, which supports said arm upon a guide a^1 on the back of the segment B. This guide terminates at one end in a raised surface b^1, and at the other end in a hooked or depressed surface h^1. This hook or depression operates a finger R pivoted eccentrically to the standard, and provided with a stud and roller i^1 on which said hook takes.

The operation of my machine is substantially as follows:—

The frame or standard A being securely fastened to the binder frame in a perpendicular position, suitable mechanical means are employed to give the segment B, which operates the various devices in the knot-tyer, a reciprocating movement. By preference I employ a crank on some revolving shaft in the reaper or binder proper, coupled to the segment by means of a connecting rod. When the point m^1 is at its point of nearest approach to the centre of the standard A, the machine is in position to engage the cord thrown over and around the bundle. The end of the cord before it is looped round the bundle is securely held by the pin *v* in the cord-holder. The cord is looped about the bundle by means of an arm similar to that employed in the ordinary well-known binder. As the cord is carried down after encircling the bundle, it is brought near to and past the holder and between the finger R and the tyer. The finger is now thrown forward by the stud and roller i^1 passing out of the depression h^1 and on to the track a^1, and presses both parts of the cord into the notches or jaws of the two tubes D D^1, where they are securely held. By the peculiar system of gears and delays the inside tube D is made first to rotate, while the outside tube D^1 is at rest until the cord is securely bit or held between the sides of the two notched tubes, when they are both moved simultaneously by means of the gears *f* f^1 on the rack *h*. During this part of the movement of the segment the spindle *d* is moved upward by means of the eccentric guide H on the segment, and the cord-holder is turned upward close under the finger R. As the fast held cord is carried about the spindle it forms a loop plate N and the incline on tube D^1, guiding the parts of the cord near to the cord-holder over the looped or wound part into the hook d^1 on the spindle.

As

As the segment continues to advance, the spindle continues to descend and draws the cord from above the loop down through it, and the inner tube D is stopped by its delay while the outer tube D^1 continues to rotate, whereby the cord previously grasped is gradually released and the continuously descending movement of the spindle draws the knot tight, since the tube D holds the looped cord from following it, and at the same time the cutting device is operated by the cam O^1, and the end of the cord is grasped and held by the pin *v* to enable the binder arm to bring the cord around a new bundle and the operation repeated. When the knot is tied or fully formed the loop is easily slipped over the end of the spindle by the falling bundle. The return movement of the segment B carries all the parts back to their original positions.

It will be noticed that the cord is clamped at two points; that the loop is formed from that portion of the cord held between the two clamps and around the inner clamp or that next to the gavel, and that the cord is drawn through the loop to form the knot before the inner clamp releases the cord, so that the slack of the knot or loop is not allowed to go into the bundle or that portion of the cord around the gavel, but is taken up outside the knot in the loop of the cord which is pulled through the loop first formed by the hook or spindle.

The cutting device is operated at the proper time by the roller *z* riding upon the raised surface b^1 at the end of the track a^1, which throws the arm O forward so that the front portion of the cam O^1 striking the pin *x* will move back the slide M with the cutter *t* and the cord-holding pin *v*. As soon as the front portion of said cam has passed the pin *x* the rear portion of the cam operates against the same pin to throw the slide M inward, causing the cutter to sever the cord and the pin *v* to take hold of the end of the cord from the spool, the spring *w* simply holding the parts in proper position.

Having thus fully described my invention, what I claim as new and desire to secure by Letters of Registration is—

First—In a binder, the combination of a clamping mechanism adapted to clamp the cord at two points, a looping mechanism adapted to form a loop from that portion of the cord held between the two clamps, the loop being formed around the inner clamp or next to the gavel, and a device adapted to draw the cord through the loop and form the knot before the clamp next the gavel releases the cord, substantially as described.

Second—In a grain binder a combined clamp and looping mechanism, consisting of two concentric cylinders or tubes, with gear mechanism adapted to impart both simultaneous and independent rotary motion thereto, and a guide or shield, the devices combined substantially in the manner and for the purpose specified.

Third—A knot-tyer for grain-binders, consisting of an outer tube D^1 and an inner tube D, constructed as described, which clamp the cord or twine between them, and a hook to draw the bow through to form the knot as set forth.

Fourth—The combination of the inner tube D and the outer tube D^1 having both simultaneous and independent rotary motion, and the spindle *d* rotating with the inner tube and movable up and down therein, substantially as herein set forth.

Fifth—The combination of the tubes D D^1, constructed as described, gears $f f^1$ with delays $e e^1$ and the reciprocating segment B, provided with the rack *h* cut away at its ends and provided with the delay surfaces $k k^1$, substantially as and for the purposes herein set forth.

Sixth—The finger R, operated by means of the stud and roller *i* and the segment B, with track a^1 and hook h^1 in combination with the tubes D D^1, for the purposes herein set forth.

Seventh—The combination of the segment B, bracket J, arm and cord-holder K L, as and for the purpose herein set forth.

Eighth—The slide M, arranged in the arm L and provided with the cutter *t*, holding pin *v*, and pin *x*, in combination with the double cam O^1, substantially as and for the purposes herein set forth.

Ninth—The combination of the cam O^1, arm O, rocking shaft *y*, arm P, with stud and roller *z*, and the segment B, having brack a^1 with raised surface b^1, substantially as and for the purposes herein set forth.

Tenth—The combination of the spindle *d* with collars *n n*, tube *m* with web *p*, guide rod F, stud and roller *s*, and the eccentric guide H on the segment B, substantially as and for the purposes herein set forth.

In witness whereof, I, the said Ole O. Storle have hereto set my hand and seal, this second day of September, one thousand eight hundred and eighty.

OLE O. STORLE,
(By his Agent, EDWD. WATERS.)

This is the specification referred to in the annexed Letters of Registration granted to Ole O. Storle, this nineteenth day of October, A.D. 1880.

AUGUSTUS LOFTUS.

REPORT.

Sir,

Sydney, 20 September, 1880.

We do ourselves the honor to state that we are of opinion that Letters of Registration may issue in favour of Mr. Ole O. Storle, for his invention, "Improvements in Knot-tyers for Grain-binders," in accordance with Mr. Storle's Petition, specification, drawings, and claim, transmitted for our report, under your blank cover communication of the 10th instant, No. 7,450.

We have, &c.,
GOTHER K. MANN.
ROBERT GEO. MASSIE.

The Principal Under Secretary.

[Drawings—one sheet.]

— O. O. STORLE. —

KNOT-TIER FOR GRAIN-BINDERS.

Fig. 1

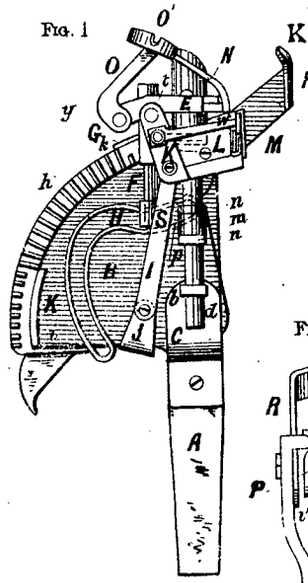

Fig. 11



Fig. 2

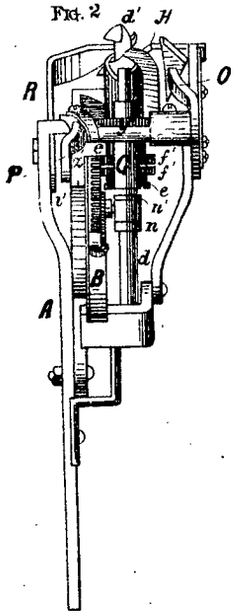

Fig. 4.

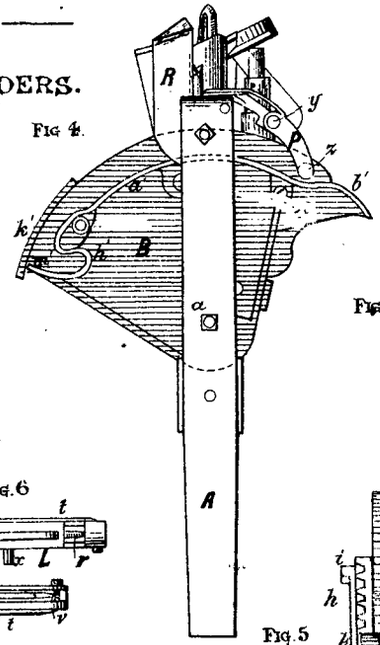

Fig. 7.



Fig. 6

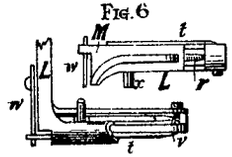

Fig. 8

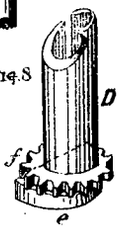

Fig. 3

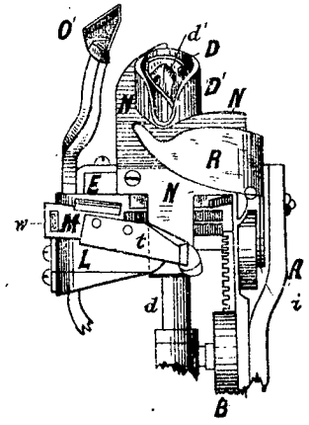

Fig. 9

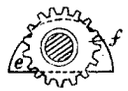

Fig. 5

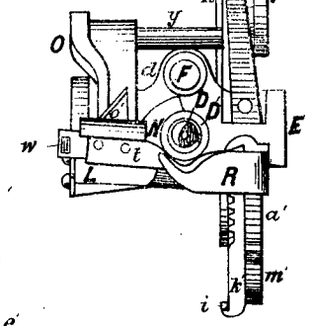

Fig. 10

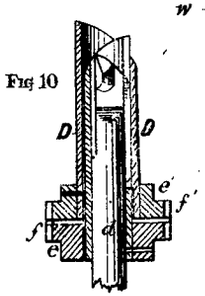

This is the Sheet of Drawings referred to in the annexed Letters of Registration granted to Ole. O. Storle this nineteenth day of October ad 1880.

(Sig. 357.)

"Augustus Loftus."

PHOTO-LITHOGRAPHED AT THE GOVT. PRINTING OFFICE
SYDNEY, NEW SOUTH WALES.

A.D. 1880, 19*th October*. No. 885.

AN EXCAVATING MACHINE.

LETTERS OF REGISTRATION to John McNevin, for an Invention for excavating and depositing earth.

[Registered on the 20th day of October, 1880, in pursuance of the Act 16 Vic. No. 24.]

BY HIS EXCELLENCY THE RIGHT HONORABLE SIR AUGUSTUS WILLIAM FREDERICK SPENCER LOFTUS (commonly called LORD AUGUSTUS LOFTUS), Knight Grand Cross of the Most Honorable Order of the Bath, a Member of Her Majesty's Most Honorable Privy Council, Governor and Commander-in-Chief of the Colony of New South Wales and its Dependencies.

TO ALL TO WHOM THESE PRESENTS SHALL COME, greeting :

WHEREAS JOHN MCNEVIN, of Cardington, Molong, in the Colony of New South Wales, hath by his Petition humbly represented to me that he is the assignee of William Whitton Davis, of Forbes, in the said Colony, who is the author or designer of a certain invention or improvement in manufactures, that is to say, of an invention for "Excavating and depositing earth," which is more particularly described in the specification and the sheet of drawings which are hereunto annexed; and that he, the said Petitioner, hath deposited with the Honorable the Treasurer of the said Colony of New South Wales the sum of Twenty Pounds sterling, for defraying the expense of granting these Letters of Registration, as required by the Act of Council, sixteenth Victoria, number twenty-four; and hath humbly prayed that I would be pleased to grant Letters of Registration, whereby the exclusive enjoyment and advantage of the said invention or improvement might be secured to him for a period of fourteen years: And I, being willing to give encouragement to all inventions and improvements in the arts or manufactures which may be for the public good, and having received a report favourable to the prayer of the said Petition, from competent persons appointed by me to examine and consider the matters stated therein and to report thereon for my information, am pleased, with the advice of the Executive Council, and in exercise of the power and authority given to me by the said Act of Council, to grant, and do by these Letters of Registration grant unto the said John McNevin, his executors, administrators, and assigns, the exclusive enjoyment and advantage of the said invention or improvement, for and during the term of fourteen years from the date hereof; to have, hold, and exercise unto the said John McNevin, his executors, administrators, and assigns, the exclusive enjoyment and advantage thereof, for and during and unto the full end and term of fourteen years from the date of these presents next and immediately ensuing, and fully to be complete and ended: Provided always, that if the said John McNevin shall not, within three days after the granting of these Letters of Registration, register the same in the proper office in the Supreme Court, at Sydney, in the said Colony of New South Wales, then these Letters of Registration, and all advantages whatsoever hereby granted, shall cease and become void.

In witness whereof, I have hereunto set my sign manual, and have caused the present Letters of Registration to be sealed with the seal of the said Colony of New South Wales, at Government House, Sydney, in New South Wales, this nineteenth day of October, in the year of our Lord one thousand eight hundred and eighty.

[L.S.] AUGUSTUS LOFTUS.

A.D. 1880. No. 885.

An Excavating Machine.

SPECIFICATION.

TO ALL TO WHOM THESE PRESENTS SHALL COME, I, JOHN MCNEVIN, of Cardington, Molong, in the Colony of New South Wales, send greeting:

WHEREAS I am the assignee of an excavating machine, whereof William Whitton Davis, of Molong in the Colony of New South Wales, is the author or inventor, and whereas I am desirous of obtaining Letters Patent for the same, I now declare the nature of my invention, that is to say:—

MY improved excavator consists of four principal parts: firstly, a plough or ploughs to break and raise the earth; secondly, a revolving wheel, carrying forks, shovels, or other implements to throw the earth back from the ploughs; thirdly, an elevator to raise the earth; and fourthly, a box to contain the earth. The whole is mounted on a wheeled carriage, so that it can be drawn by horses, oxen, and steam-traction engine, or by any other motive power.

In the accompanying drawing, fig. 1 is a side view of the machine in sections, &c.; fig. 2 is a partial plan of the same, portions being shown as removed to simplify the drawing. The same letters apply to both views. A A is the main frame. B B are the principal wheels. C C are the fore wheels. D is the pole for traction. E E are ploughs right and left handed. F is a trough or box, being a continuation of the breasts of the ploughs. H is a large box to hold the excavated material. I is a movable or hinged lid to box H. K is a top tumbler to give motion to the elevator. L is a bottom tumbler to the elevator. M is a revolving wheel, carrying movable forks or shovels. N N are elevator buckets. O O are the locking plates of the fore carriage. P is a frame resting on the fore carriage, and hinged to the main frame. Q is a bolt forming the hinge of frame P to main frame A A. R is a screw working freely in a bracket on frame P, and in a nut attached to frame A. S is bevel-gearing to screw R. T is a hand-wheel for working gearing S. U is a pitch or gear wheel giving motion to tumbler K. V is a pitch or gear wheel giving motion to revolving forks M. W is the counter shaft for transmitting motion to tumbler K. X is a spur-wheel on shaft W. Y is a spur-wheel on shaft or tumbler K. Z Z are pitch chains for driving tumbler K and revolving forks M. *a a* are ploughshares. *b* is a coulter. *c* is a seat for the attendant. *d* is a footboard for same. *e* is a bell-crank lever for opening and closing the door of box H. *f* is a screw actuating lever *e*. *g* is a hand-wheel by which the attendant opens or shuts the door of box H. *h* is the main axle of the carriage. *i* is the fore axle of the carriage. *k* is a pitch pinion or pulley keyed fast on axle of M, to take the motion from wheel or pulley V and drive the revolving forks or shovels. *l* is a pitch pinion or pulley keyed fast on axles W, to take the motion from wheel or pulley U and drive the tumbler and elevator buckets. *m* is an axle or hinged joint on which the movable bottom or door of box H is hinged. *n* is a connecting rod for opening or shutting door H from bell-crank *e*. *o* is a joint on door H to which the connecting rod *n* is jointed. *p* is the upper tumbler shaft or axle. *q* is the lower tumbler shaft or axle. *r r r r* are bosses or sockets on the wheel M, to hold shovels, forks, rakes, or other tools as may be required by the nature of the ground being excavated. *s s s s* are forks, rakes, or other tools attached to wheel M in such a way as to be removable and changeable at pleasure. *t* is a shaft or axle of wheel M. *u u* are stay rods to strengthen the framing of the machine. *v v* are brackets for holding the coulter or coulters of the plough or ploughs. *w* is a bracket secured to frame P, for carrying the gearing S and screw R. *x* is a nut secured to main frame A, in which the screw R works.

Having now described the various leading parts of my machine, the manner of its operation is as follows:—

On being brought to the site of the intended waterhole or excavation, the horses, oxen, or other motive power are attached, and by means of the hand-wheel T and screw R the main frame is raised or lowered so that the plough and ploughshare are raised or lowered to suit the thickness of the sod to be cut, and the hand-wheel S is turned so that the bottom I of box H is closed. When the machine is set in motion the plough with its share and coulter cuts a slice of earth, which slides along the breasts of the ploughs into box or trough F. At the same time the motion of the machine (through the revolution of the principal wheels B, the chains or belts Z Z, the pulleys or pinions *k* and *l*, the wheel and pinion X and Y, and the axles W *q t*) causes the tumbler K and the wheel M to revolve in the directions indicated by the arrows, and the revolution of tumbler K causes the elevator buckets N N to travel. The revolution of the wheel M causes the forks of shovels *s s* to throw the excavated earth against the elevator buckets N N, and these buckets by their motion raise such earth and deposit it in the box H. When by the action of the machine the box H is filled to the extent required, the attendant turns the hand-wheel T and raises the plough out of the earth, when cutting ceases and the machine is drawn to the spot where the excavated material is to be deposited. When the box H is to be emptied, the hand-wheel *g* is turned until the door I or bottom of box H is tilted or opened much or little, and by the forward progress of the machine the excavated material is deposited and spread on the ground in thick or thin layers as required, which may be consolidated each succeeding time; the machine passes over it to deposit another layer, and thus form a solid dam or embankment.

Having now described my machine, I do not claim as novel any of the mechanical arrangements taken separately, but what I do claim is:—

Firstly—The combination of a plough or ploughs with a set of revolving forks or shovels, and an elevator for raising and filling a box for excavating purposes, and arranged substantially as shown on drawing.

Secondly—The construction of the box for the excavated material, with a jointed bottom for emptying and discharging the contents in a thick or thin layer as required, and substantially as shown on drawing.

In witness—

JOHN MCNEVIN.

This is the specification referred to in the annexed Letters of Registration granted to John McNevin, this nineteenth day of October, A.D. 1880.

AUGUSTUS LOFTUS.

REPORT.

An Excavating Machine.

REPORT.

Sir, Sydney, 6 September, 1880.

We do ourselves the honor to report, in reply to your blank cover communication of the 25th ultimo, No. 7,069, that we find no objection to the issue of Letters of Registration in favour of John McNevin for an invention for "Excavating and depositing earth," in accordance with his Petition and his specification, drawings, and claim transmitted therewith.

We have, &c.,
GOTHER K. MANN.
JAMES BARNET.

The Principal Under Secretary.

[Drawings—one sheet.]

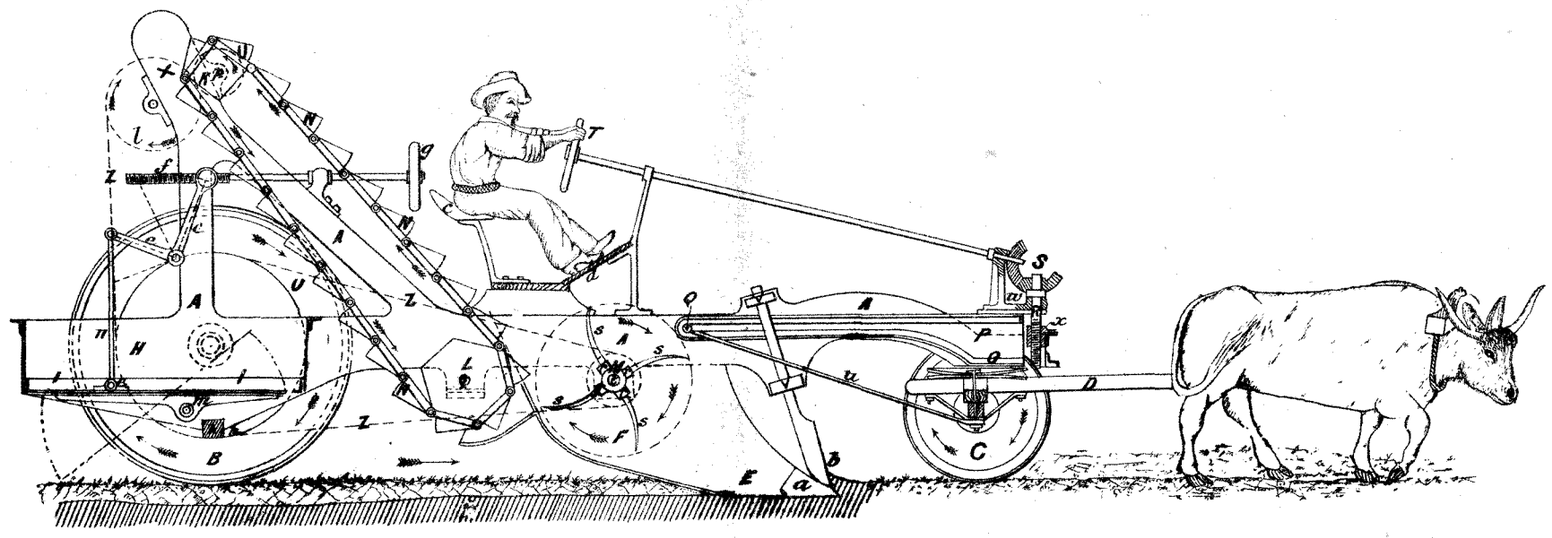

Fig:1.

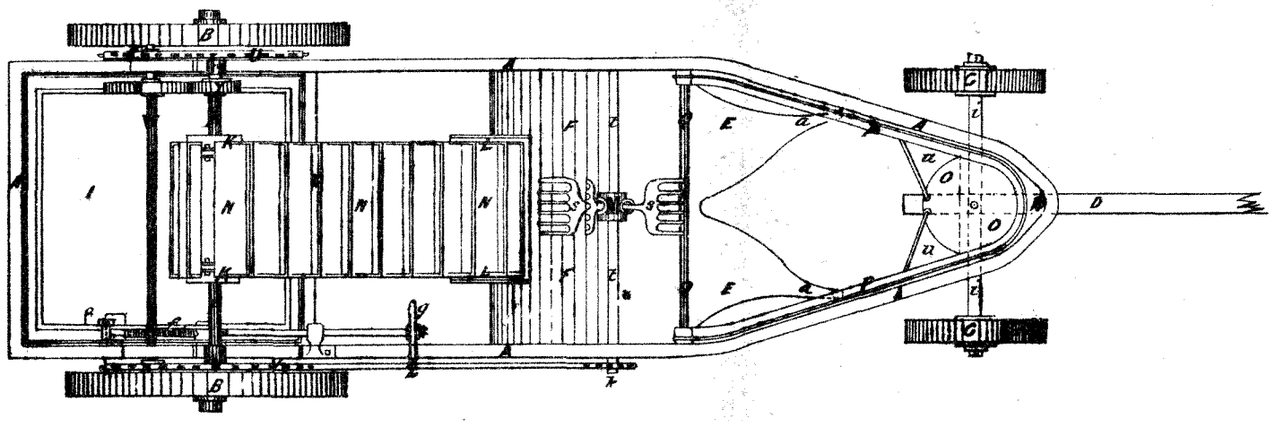

Fig:2.

This is the Sheet of Drawings referred to in the annexed Letters of Registration granted to John Mc Nevin, this nineteenth day of October A.D. 1880

Augustas Loftus



A.D. 1880, 19*th October*. No. 886.

LOCK'S RADIAL POINT AND IMPROVED CARRIER HOOK AND ROLLER.

LETTERS OF REGISTRATION to Alexander Barclay Farquhar and William Galpin Lock, for Lock's Radial Point and improved Carrier Hook and Roller.

[Registered on the 20th day of October, 1880, in pursuance of the Act 16 Vic. No. 24.]

BY HIS EXCELLENCY THE RIGHT HONORABLE SIR AUGUSTUS WILLIAM FREDERICK SPENCER LOFTUS (commonly called LORD AUGUSTUS LOFTUS), Knight Grand Cross of the Most Honorable Order of the Bath, a Member of Her Majesty's Most Honorable Privy Council, Governor and Commander-in-Chief of the Colony of New South Wales and its Dependencies.

TO ALL TO WHOM THESE PRESENTS SHALL COME, greeting:

WHEREAS ALEXANDER BARCLAY FARQUHAR and WILLIAM GALPIN LOCK, both of Sydney in the Colony of New South Wales, gentlemen, have by their Petition humbly represented to me that they are the authors or designers of a certain invention or improvement in manufactures, that is to say, of an invention of "A method of easily transporting goods, wares, and materials on rails or trams, to be called 'Lock's Radial Point and improved Carrier Hook and Roller,'" which is more particularly described in the specification and the sheet of drawings which are hereunto annexed; and that they, the said Petitioners, have deposited with the Honorable the Treasurer of the said Colony of New South Wales the sum of Twenty Pounds sterling, for defraying the expense of granting these Letters of Registration, as required by the Act of Council, sixteenth Victoria, number twenty-four; and have humbly prayed that I would be pleased to grant Letters of Registration, whereby the exclusive enjoyment and advantage of the said invention or improvement might be secured to them for a period of fourteen years: And I, being willing to give encouragement to all inventions and improvements in the arts or manufactures which may be for the public good, and having received a report favourable to the prayer of the said Petition, from competent persons appointed by me to examine and consider the matters stated therein and to report thereon for my information, am pleased, with the advice of the Executive Council, and in exercise of the power and authority given to me by the said Act of Council, to grant, and do by these Letters of Registration grant unto the said Alexander Barclay Farquhar and William Galpin Lock, their executors, administrators, and assigns, the exclusive enjoyment and advantage of the said invention or improvement, for and during the term of fourteen years from the date hereof; to have, hold, and exercise unto the said Alexander Barclay Farquhar and William Galpin Lock, their executors, administrators, and assigns, the exclusive enjoyment and advantage thereof, for and during and unto the full end and term of fourteen years from the date of these presents next and immediately ensuing, and fully to be complete and ended: Provided always, that if the said Alexander Barclay Farquhar and William Galpin Lock, shall not, within three days after the granting of these Letters of Registration, register the same in the proper office in the Supreme Court, at Sydney, in the said Colony of New South Wales, then these Letters of Registration, and all advantages whatsoever hereby granted, shall cease and become void.

In witness whereof, I have hereunto set my sign manual, and have caused the present Letters of Registration to be sealed with the seal of the said Colony of New South Wales, at Government House, Sydney, in New South Wales, this nineteenth day of October, in the year of our Lord one thousand eight hundred and eighty.

[L.S.] AUGUSTUS LOFTUS.

Lock's Radial Point and improved Carrier Hook and Roller.

SPECIFICATION.

TO ALL TO WHOM THESE PRESENTS SHALL COME: We, ALEXANDER BARCLAY FARQUHAR and WILLIAM GALPIN LOCK, both of Sydney, in the Colony of New South Wales, send greeting:

WHEREAS we are desirous of obtaining Letters Patent for securing unto us Her Majesty's special license that we, our executors, administrators, and assigns, or such others as we or they should or may at any time agree with, and no other, should and lawfully might, from time to time, and at all times during the term of fourteen years, to be computed from the day on which this instrument is left at the office of the Colonial Secretary, at Sydney, make, use, exercise, and vend within the Colony of New South Wales, an invention for economising labour and facilitating the transport of goods by rails or trams, styled "Lock's Radial Point and improved Carrier Hook and Roller"; and in order to obtain the said Letters Patent we must, by an instrument in writing under our hands and seals, particularly describe and ascertain the nature of the said invention and in what manner the same is to be performed: Now know ye that we, the said Alexander Barclay Farquhar and William Galpin Lock, do hereby declare the nature of the said invention and the manner performed to be particularly described and ascertained in and by the following statement and description, reference being had to the drawings hereunto annexed, and to the letters and figures marked thereon, which indicate the parts there referred to and herein particularly explained, that is to say: This invention is based on a principle and mode of connecting one line of trams or rails with another line running at right or any other angle to it, and conveying goods and materials by a single carrier hook from one line of rails or trams on to other lines at any angle or curve with facility and economy, avoiding the labour of lifting, detaching, reloading or rehooking in transit, which advantages are not found in any other modes of transporting goods, packages, or materials, and for this we seek the protection of Letters Patent.

Figure No. 1, exhibits a plan of a room or enclosure with the main and radiating lines of carrier rails, which rails may be applied to or in any store, warehouse, building, wharf, yard, enclosure, or any place where goods, wares, packages of all descriptions, have to be transported from one point to another.

Figures Nos. 2 and 4 are elevation and plan respectively showing the main carrier rail and radial point connecting the main and radiating lines.

Figure No. 3 represents the improved carrier hook and roller, all of which are more particularly described as follows:—

Figure No. 1, *a a* is a room which is selected preferably for the sake of illustration, having the main carrier line A B entering at the centre and running across the room, but which may enter at any convenient point and run in any direction to any desired point, either in a straight line or with any curve or incline. 1, 2, 3, 4 are the radiating lines running at right angles to A B, but which may be arranged to any other desirable angle, as at 5 D F, the radial points connecting the main carrier rail A B with the radiating lines 1, 2, 3, 4, and 5, and may be made with a curve of any radius to suit the desired connection.

Figures Nos. 2 and 4 are elevation and plan respectively showing the radial points D F connecting the main carrier line A B with the radiating lines 1 and 2, and in the same manner with the other lines in figure No. 1. The radial point D F is an inclined plane or wedge-shaped bar made of wood or any metal (preferably iron is taken for the sake of illustration) resting on the main line A B at the points D E, and from point E is curved with any required radius so as to join the radiating lines 1 and 2 at the point F with a scarf. About the centre or any other convenient point of the curve is fixed a bracket G, the end of which is made to rest on the main line A B to maintain the radial point D F in opposite position. The radial point D F being a detachable part is adaptable for connecting the main line A B with any of the radiating lines shown in figure No. 1, and the radial point D F may be made to curve either to the left or to the right of the main line A B, so that the improved carrier hooks, figure 3, may hang on either the left or right side of the radiating lines.

Figure No. 3 represents the improved carrier hook and roller which may be made of any material of sufficient strength for the purpose required—preferably iron is taken for the sake of illustration. C is the hook made in one piece, and set so as to form the pin H for the roller I, and balanced so as to carry a weight on a straight or curved line or incline, and round a curve of any radius necessary without losing its equilibrium or running off the line. The roller G is made with bevelled flanges on both sides $\frac{1}{4}$ of an inch deep (but which may be more or less, but preferably for illustration $\frac{1}{4}$ of an inch is specified), with the bevel formed preferably at the angle shown in the drawing. The end of the pin H is preferably on the score of economy simply riveted over a washer.

The following are a few of the numerous advantages claimed for the before specified:—

We claim especially the applying of the inclined plane D E of the radial point D F as a novel and most convenient mode of connecting radiating lines of rails or trams, and for raising the improved carrier hook or other vehicle of conveyance sufficiently off the line A B to allow the flanges of the roller in turning the curve on radial point D F to clear the line A B and pass on to the radiating lines.

Simplicity and economical construction of the "Improved Carrier Hook and Roller," the peculiar form of the hook and pin in one piece, the bevel flanges of the roller, and its adaptability to run in safety on curves of any radius or incline.

The economy of labour in moving and transporting goods and heavy weights from one place to another, and especially in dealing with meat in abattoirs, markets, refrigerating chambers and cars, and freezing depôts, by avoiding all handling.

Simplicity and economy of general arrangement.

ALEX. B. FARQUHAR.
W. G. LOCK.

Sydney, 27th August, 1880.

This is the specification referred to in the annexed Letters of Registration granted to Alexander Barclay Farquhar and William Galpin Lock, this nineteenth day of October, A.D. 1880.

AUGUSTUS LOFTUS.

REPORT.

Lock's Radial Point and improved Carrier Hook and Roller.

REPORT.

Sir, Sydney, 14 September, 1880.

We do ourselves the honor to state that we see no objection to the issue of Letters of Registration, securing to Messrs. Alexander Barclay Farquhar and William Galpin Lock the invention styled by them "Lock's Radial Point and Improved Carrier Hook and Roller," in accordance with the Petition and drawings and specification transmitted for our report under your blank cover communication of 31st August, 1880.

We have, &c.,
JOHN WHITTON.
WILLIAM C. BENNETT.

The Principal Under Secretary.

[Drawings—one sheet.]

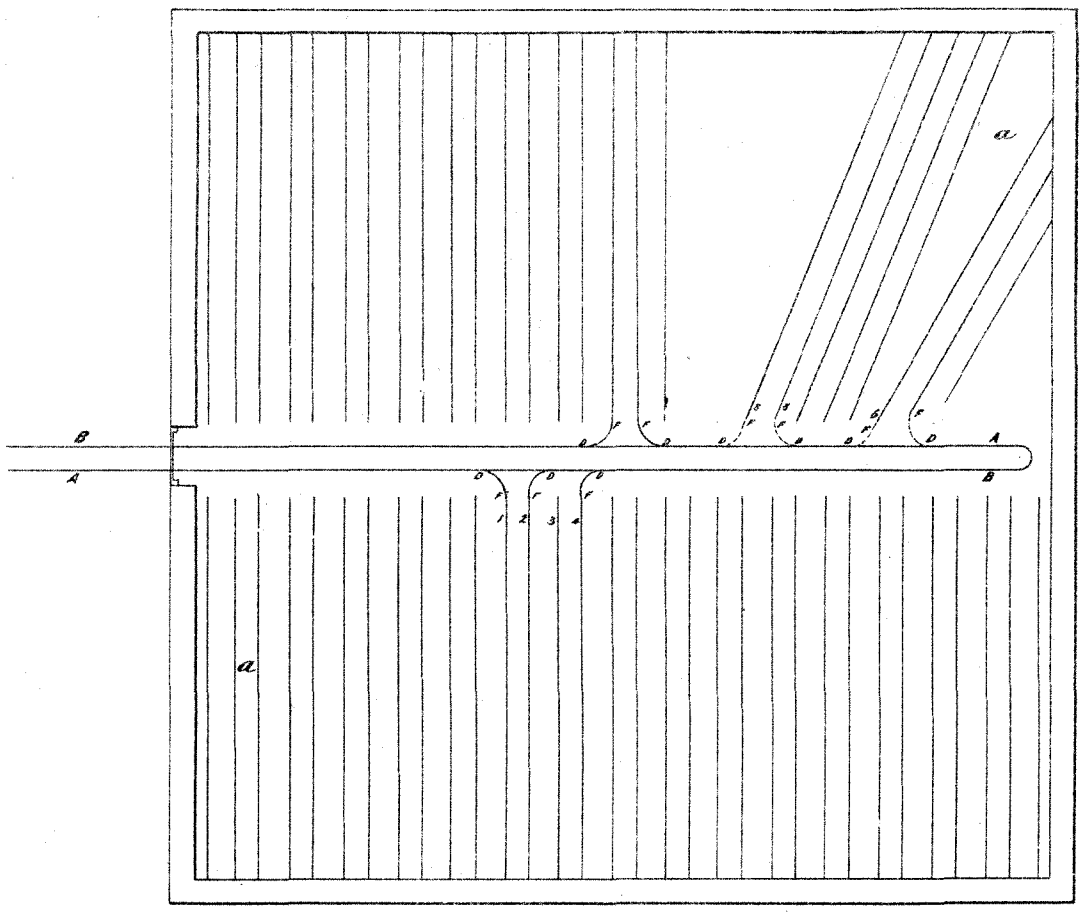

Fig 1

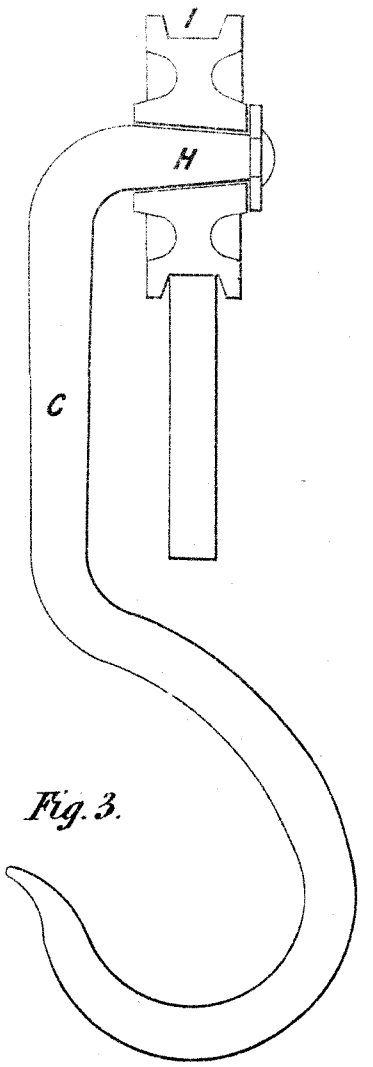

Fig. 3.

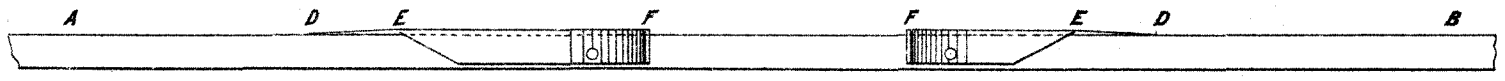

Fig. 2.

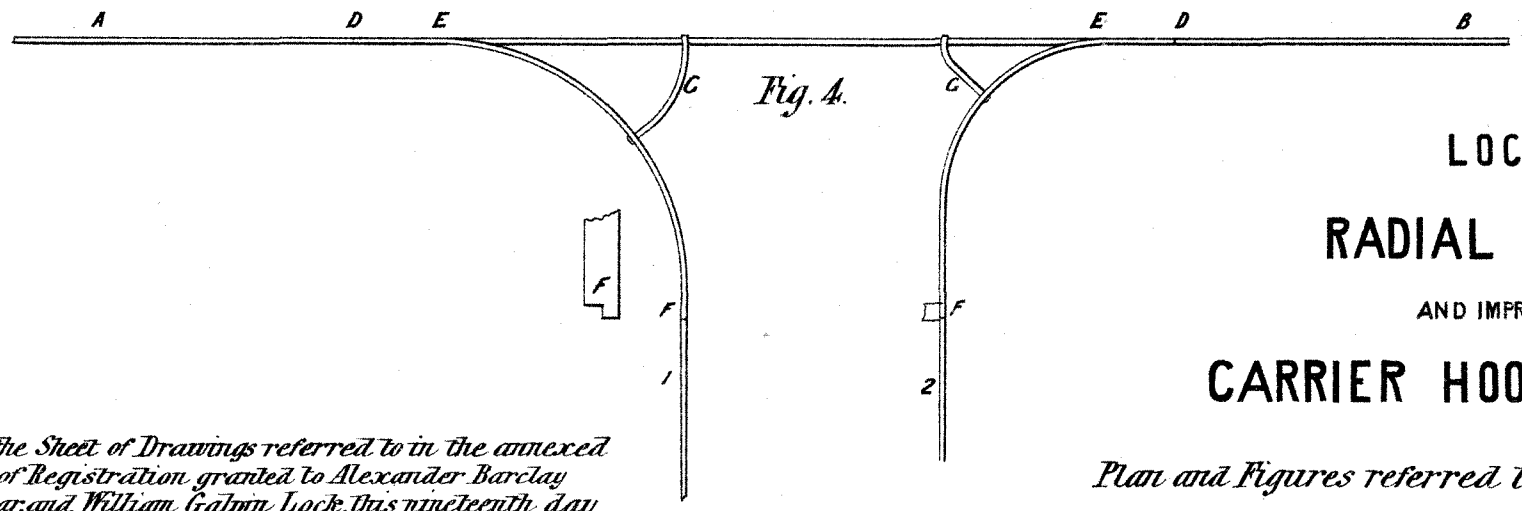

Fig. 4.

LOCK'S

RADIAL POINT

AND IMPROVED

CARRIER HOOK AND ROLLER

Plan and Figures referred to in annexed Specification.

This is the Sheet of Drawings referred to in the annexed Letters of Registration granted to Alexander Barclay Farquhar, and William Galpin Lock, this nineteenth day of October A.D. 1880.

Augustus Loftus.

Alex. Farquhar

W. G. Lock

(Sig. 337)

PHOTO-LITHOGRAPHED AT THE GOVT. PRINTING OFFICE, SYDNEY, NEW SOUTH WALES.

A.D. 1880, 19*th October*. No. 887.

COLONIAL FREEZING MACHINE.

LETTERS OF REGISTRATION to Norman Selfe, for the production of Artificial Cold.

[Registered on the 20th day of October, 1880, in pursuance of the Act 16 Vic. No. 24.]

BY His Excellency the Right Honorable Sir Augustus William Frederick Spencer Loftus (commonly called Lord Augustus Loftus), Knight Grand Cross of the Most Honorable Order of the Bath, a Member of Her Majesty's Most Honorable Privy Council, Governor and Commander-in-Chief of the Colony of New South Wales and its Dependencies.

TO ALL TO WHOM THESE PRESENTS SHALL COME, greeting:

WHEREAS Norman Selfe, of Sydney, in the Colony of New South Wales, hath by his Petition humbly represented to me that he is the author or designer of a certain invention or improvement in manufactures, that is to say, of an invention for "The production of Artificial Cold," which is more particularly described in the amended specification and the sheet of drawings which are hereunto annexed; and that he, the said Petitioner, hath deposited with the Honorable the Treasurer of the said Colony of New South Wales the sum of Twenty Pounds sterling, for defraying the expense of granting these Letters of Registration, as required by the Act of Council, sixteenth Victoria, number twenty-four; and hath humbly prayed that I would be pleased to grant Letters of Registration, whereby the exclusive enjoyment and advantage of the said invention or improvement might be secured to him for a period of fourteen years: And I, being willing to give encouragement to all inventions and improvements in the arts or manufactures which may be for the public good, and having received a report favourable to the prayer of the said Petition, from competent persons appointed by me to examine and consider the matters stated therein and to report thereon for my information, am pleased, with the advice of the Executive Council, and in exercise of the power and authority given to me by the said Act of Council, to grant, and do by these Letters of Registration grant unto the said Norman Selfe, his executors, administrators, and assigns, the exclusive enjoyment and advantage of the said invention or improvement, for and during the term of fourteen years from the date hereof; to have, hold, and exercise unto the said Norman Selfe, his executors, administrators, and assigns, the exclusive enjoyment and advantage thereof, for and during and unto the full end and term of fourteen years from the date of these presents next and immediately ensuing, and fully to be complete and ended: Provided always, that if the said Norman Selfe shall not, within three days after the granting of these Letters of Registration, register the same in the proper office in the Supreme Court, at Sydney, in the said Colony of New South Wales, then these Letters of Registration, and all advantages whatsoever hereby granted, shall cease and become void.

In witness whereof, I have hereunto set my sign manual, and have caused the present Letters of Registration to be sealed with the seal of the said Colony of New South Wales, at Government House, Sydney, in New South Wales, this nineteenth day of October, in the year of our Lord one thousand eight hundred and eighty.

[L.S.] AUGUSTUS LOFTUS.

Colonial Freezing Machine.

SPECIFICATION.

TO ALL TO WHOM THESE PRESENTS SHALL COME, I, NORMAN SELFE, of Sydney, in the Colony of New South Wales, send greeting:

WHEREAS I am the author of an invention for producing artificial cold, which I call the "Colonial Freezing Machine," and am desirous of obtaining Letters Patent for the same: I now declare the nature of my invention and the way in which its operations are performed in the following specification, that is to say:—

My invention consists of certain improvements in apparatus for making ice for cooling chambers, or in other ways producing cold by the alternate liquefaction and evaporation of ammonia. Instead of using ammoniacal liquor or a solution of ammonia in water, as is done in many other freezing machines, I use ammonia liquefied or compressed ammoniacal gas. I produce the liquefaction of the ammonia by compression in a special form of pump to be presently described, and the evaporation or gasification of the same is produced by the heat taken up from a brine, from air, or from some other cooling medium which is then employed either for making ice or for cooling chambers as may be desired.

I arrange my pump so that it can be driven by a steam-engine, windmill, waterwheel, turbine, by horses, or by any other source of power, so as to adapt it for the varied requirements of the Colonies. The machine is thus suitable for the dairyman or butcher in the country, who may require only a small cooling power, and who may prefer to drive it by means of horses. It can be driven from a steam-engine, which also does other work, or it can have a special engine of its own; it is thus enabled to meet all requirements and circumstances.

In the simplest form of my machine for making ice I employ (1) an ammonia pump, (2) a condenser, (3) an evaporator immersed in a vessel containing a non-freezing solution, and (4) the moulds containing the water to be frozen.

In the simplest form of my machine for cooling a chamber I add to the foregoing (5) pipes or flat-surfaced boxes fixed in the chamber to be cooled, and (6) a pump to circulate the cold solution or brine through such pipes to take up the heat of the chamber.

In another form of my machine, and when it is not required to make ice, I enclose the ammonia pipes or evaporator in a trunk or casing through which air is circulated on its way to the cold chamber, and I can increase the surface of these evaporating pipes by forming them with fins, wings, or flanges, so as to increase their power of conducting the heat of the air or solution to the ammonia to be evaporated.

In another arrangement of my machine I pass the cold brine or solution over a series of pipes arranged as a refrigerator commonly used by brewers, and circulate air through the pipes to become cooled, or I arrange boxes or pipes for the circulation of air to be cooled, and the coils of the ammonia evaporator alternately in a box or vessel of brine or non-freezing solution, so that such brine or solution acts as a medium and enables the evaporation of the ammonia to reduce the temperature of the air circulated through the apparatus.

In another arrangement of my machine for producing a circulation of cold air in a chamber, I immerse the ammonia evaporator in an air-tight vessel of water, and pump or force air through the water on its way to the chamber; such air may be either at the atmospheric pressure or above it, and may be forced by a fan, blower, or other equivalent well known device or devices, or by one of the special forms of air-pumps described in my former patent for freezing machinery, No. , and I abstract the water taken up by the air from such vessel by causing it to pass through trunks or pipes lined with non-conducting material, or through a surface condenser or exchanger in which is circulated a still colder solution, and I withdraw the water by means of traps or other similar devices, and I cause the cold air to be delivered into my cold chamber or into any part of such chamber as may be required by means of pipes opening where required, and controlled by cocks or valves, so as to enable me to regulate the relative temperatures of the various portions of the chamber.

Another part of my invention has for its object the production of cold in a railway train, principally for the preservation of perishable goods under transport; and for this purpose I fit up a refrigerating carriage with a separate compartment, in which I place refrigerating machinery so constructed that the motive power required can be taken directly or indirectly from the axle of the carriage and primarily from the locomotive drawing the train. In descending inclines it would be worked by the gravity of the train without requiring engine power. Having produced cold from the action of the pump driven from the carriage axle, in the form of cold air, cold brine, or other convenient medium, I circulate such cold medium in the chamber for the purpose of keeping it cool, or through chambers in other carriages of the train, by making a communication through flexible pipes. In order to dissipate and get rid of the heat taken up by the ammonia and to reduce the quantity of condensing water which would be required, I construct my condenser, or a part of it, of pipes having wings or fins, to increase their surface as before described, or of any other arrangement of suitable surfaces; and I fix these pipes or surfaces outside the carriage, where they will be exposed to the action of the air or wind, and by this means cool the vapour or liquid within the pipes; or I circulate my condensing water through a similar arrangement of pipes or metallic surfaces, so as to enable it to part with the heat it has taken up and be used over again; or I use any other similar arrangement whereby the natural wind or artificial rush of air set up by the motion of the train may be made use of for carrying away the heat given out by condensation.

In an arrangement of my machine for compressing vapour or doing other work with an economical expenditure of steam, air, or other vapour, I use a compound engine having two or more cylinders, in which the steam, air, or vapour is successively expanded; and in order to enable such compound engine to exert a variable power with a constant pressure, or a constant power with a variable pressure, I provide a valve by which the steam, air, or vapour may be admitted to the smallest cylinder only, or successively to the larger cylinders as well.

In the accompanying drawing, fig. 1 is a general plan of a refrigerating or cooling establishment; fig. 2 is a sectional elevation of the same; fig. 3 is a detail section of the pump; figs. 4, 5, 6, and 7 are plans showing the pump driven respectively by a belt, horses, water power, and by the direct action of a steam-engine.

The

The same letters apply to the above seven figures in the following descriptions:—

A is a pump for exhausting and compressing ammonia, by preference so constructed that the piston-rod side of the piston is not subject to the pressure against which the pump is working, in order that the risk of leakage at the piston-rod packing may be reduced.

B B is the sole-plate and framing, which may be of any convenient form.

C is the crank-shaft whereby the pump is put in motion through a connecting rod in the usual way.

D is a pipe conveying the compressed ammonia from the pump to the condenser.

E is a coil of pipes, worm, or condenser, immersed in a vessel of water. Through this condenser the compressed ammonia from the pump A and pipe D is passed for the purpose of removing the sensible heat of compression and of producing liquefaction of the ammonia.

F is a tank or other vessel for holding the condensing water in which the condenser E is immersed.

G is the ice-box containing a solution of brine or chloride of calcium to be used as a medium for making ice, for cooling chambers, or for any other application of cold.

H H^{I} H^{II} H^{III} H^{IV} are coils of pipe immersed in the brine, through which pipes the condensed ammonia from the condenser E is passed to take up the heat from the brine.

I^{I} I^{II} I^{III} I^{IV} are cocks or valves to regulate the admission of ammonia to the pipes H H^{I} H^{II} H^{III} H^{IV} at their upper ends.

J is a pipe connecting the condenser E with the pipes H H^{I} H^{II} H^{III} H^{IV}.

K is a pipe communicating with the bottom ends of the coils H H^{I} H^{II} H^{III} H^{IV} and the suction branch of the pump A to enable the heated or vaporized ammonia to be withdrawn for compression and liquefaction.

L M is a cooling chamber and ice-house constructed with double walls, filled with non-conducting material, and provided with double or treble doors.

N is a brine pump, which may be worked off the main crank-shaft C and be fitted with disconnecting gear; it is for pumping the cold solution from the ice-box G, when the chamber L is required to be cooled.

OOO are pipes in the chamber L, for reducing its temperature by the circulation of cold brine through them.

P is a suction pipe to pump N, communicating with the bottom of ice-box G, by which the cold brine is drawn into the pump.

Q is a delivery pipe to pump N, by which the cold brine is delivered into the top ends of the pipes OOO and caused to circulate in the chamber L.

R is a pipe by which the brine, after having circulated through pipes OOO and taken up heat from the chamber L, returns to the ice-box G to be again cooled.

SSS are metal moulds or boxes containing fresh water and inserted in the brine in box G, in order that such fresh water may become frozen.

T is a pipe for conveying the condensing water to the bottom of the vessel F.

U is an overflow pipe by which the heated water of the condenser or worm-tub F flows away.

W is a cock on pipe J by which the circuit of the ammonia through the machine is stopped when it is desired to exhaust the air and charge with ammonia or empty the ammonia out.

X is a cock on pipe J having a coupling or union to which a vessel can be applied when it is desired to empty the ammonia out of the machine.

Y is a cock on pipe J, having a coupling or union to which a vessel can be applied when it is desired to charge the machine with ammonia after the air has been exhausted by the pump.

In the detail figures 3, 4, 5, 6, 7, 8, fig. 3 is a pump designed to work without bringing a pressure on the piston-rod side of piston to act on the piston-rod and its packing.

a is the pump cylinder casting.

b is a liner or bush, preferably of steel, having a water jacket around between itself and the cylinder casting *a*.

c is the piston with a valve or valves opening one way.

d is the piston-rod.

e is the inlet pipe for the ammonia or gas.

f is the outlet pipe for same after compression or liquefaction.

g is an inlet valve arranged and constructed so that it can together with its seat be easily taken out for examination without removing the cylinder end.

h is a valve in the piston similar to valve *g*.

i is a delivery valve for the compressed gas, also easily removed.

k is an inlet pipe for admitting water to the cylinder jacket to keep it cool.

l is the outlet for cooling water from the cylinder jacket.

Fig. 4: *m* is a belt for driving the pump from any available source of power; *n* n^{1} are the driving and driven pulleys respectively.

Fig. 5: *o* is an ordinary horse-power machine, with the shaft connected direct to the pump.

Fig. 6: *p* is a turbine for driving the pump by water; *q* is the inlet pipe for the water; *r* is the outlet pipe; *s* is wheel gearing for transferring the motion of the turbine to the pump.

Fig. 7: *u* is a steam ordinary or compound connected direct to the pump and working in a horizontal, vertical, or any other position.

Fig. 8 represents a strong vessel, such as a quicksilver bottle, for holding liquefied ammonia under pressure for conveyance to and from the machine; *x* is a stop valve, having a screw, *y*, by which it can be connected to the union or coupling on the machine for charging with ammonia.

Fig. 9 represents another form of exhausting and compressing pump designed to operate without requiring a pressure to cause leakage through the piston-rod packing; it is also constructed to work compound in its action by compressing in two separate operations. It also works as a double-acting pump in exhaustion or suction, while it is single-acting in its delivery; 1 is a cylinder or pump barrel; 2 is a cylinder bored throughout or pump barrel smaller in diameter than 1 and concentric with it, accurately bored but not necessarily for the whole length; 3 is a liner or bush to cylinder 1, accurately bored and fitted, so as to leave a water jacket in the same way as in fig. 3; 4 is a piston, accurately fitting cylinder 1 or its liner 3; 5 is a trunk attached to piston 4 and fitting cylinder 2; 6 is a piston-rod giving motion to

piston

piston 4 and trunk 5, and working through a stuffing-box in the ordinary way; 7 is a passage connecting the bottom end of cylinder 2, the inlet valve to cylinder 1, and the suction pipe of the pump; 8 is the inlet or suction pipe; 9 is an inlet valve to cylinder 1, constructed with its seat so as to be easily removable without taking off the cylinder cover; this valve opens on the out-stroke of the piston and closes on the in-stroke; 10 is a valve in piston 4 to open on the in-stroke of the piston and permit the ammonia to pass from the full cylinder 1 to the annular space 11 below, and be thus reduced in volume; 11 is an outlet valve by which the contents of the annular portion of cylinder 1 are discharged on the out-stroke of the piston; 12 is the discharge or delivery pipe to the pump.

Fig. 10 is a detail of the suction valve and seat; 13 is the valve with a spindle; 14 is the seat shown in section, and fitted accurately into the cover of the pump; 15 is a portion of the cylinder cover; 16 is a passage in the cover; 17 is a spring to keep the valve closed; 18 18 are springs in valve seat from passage in cover; 19 is a nut to keep the seat in place; 20 is a cap to close the end and act as a lock-nut.

Fig. 11 is a combined compound engine and pump for refrigeration purposes; *a* is the high pressure cylinder of a compound steam-engine; *b* is the low pressure cylinder of a compound steam-engine; *c d* are the cylinders or barrels of the pumps; *e e*^{1} are the piston-rods of the engine and pumps respectively; *f* is a cross-head connected to the piston-rods and guided in a suitable manner; *i i*^{1} are connecting rods; *k k* are fly-wheels; *l l* are crank pins in cranks on the fly-wheels; *m* is the sole-plate of the machine; *n n* is the framing connecting the several parts of the machine; *o o* are the valve-chests of the engine cylinders; *p* is the main pipe supplying the air, steam, or vapour to drive the engine; *q* is the valve or cock for distributing the steam, air, or vapour either to the valve-chest of the smaller cylinder or the valve-chests of both the small and the large cylinders direct, or to three or more cylinders, beginning from the smallest if more than two cylinders are used; *r* is the pipe connecting the exhaust of small to valve-chest of large cylinder.

Fig. 12 is an arrangement for circulating air in direct contact with the ammonia evaporator; 21 is a pipe bringing ammonia from a condenser, as in figs. 1 and 2; 22 22 are pipes forming the evaporator for the ammonia, constructed of ordinary piping or of piping specially formed with wings or fins; 23 is a pipe communicating from the evaporator to the suction of ammonia pump; 24 25 are the inlet and outlet pipes respectively for air to traverse in order to be cooled by contact with the metallic surfaces of the evaporator.

Fig. 13 is an arrangement by which air is cooled by passing through pipes over which a cold liquid is flowing; 27 27 are pipes arranged one over the other through which air is forced; they have a serrated sheet of metal attached on the lower side, to equalize the flow of a liquid over their surfaces; 28 is a trough having openings in the bottom to allow of a flow of cold liquid over pipes 27 27.

Fig. 14 is an apparatus in which pipes or other arrangement of surfaces forming an ammonia evaporator and air-cooler respectively are arranged alternately in a vessel containing a conducting liquid; 29 is a pipe for the ammonia; 30 30 are pipes forming the ammonia evaporator; 31 32 32 are pipes through which air is circulated to become cooled.

Fig. 15 is an apparatus for cooling air by passing it through a cold liquid; 33 is a vessel containing cold liquid; 34 34 are portions of an ammonia evaporator to cool the liquid vessel 33; 35 is a pipe opening by perforations or otherwise near the bottom of vessel 33, and bringing air to be cooled forced in by mechanical means; 36 is a pipe to convey the cold and moist air to where required.

Fig. 16 is a compound engine to be worked by the pressure of ammonia gas or other similar vapour, so constructed as to reduce the risk of leakage through the piston-rod packing by a similar arrangement to that adopted in compound pump shown by fig. 9; 37 is the admission pipe for the vapour under pressure; 38 is the valve-chest; 39 is a cylinder or leakage chamber in connection with the exhaust pipe of engine; 40 is a cylinder, being the low pressure on down-stroke of piston and high pressure cylinder on the up-stroke; 41 is the low pressure piston on its upper side and the high pressure piston on its reduced or annular lower side; 42 is a trunk on piston 41, working in cylinder 39; 43 is the centre port or valve face by which the high pressure vapour is admitted to the annular or high pressure piston; 44 is a port by which the vapour in the annular space is admitted to the low pressure piston when the slide valve is down; 45 is the exhaust port by which the expanded vapour escapes from the low pressure side of piston on the up-stroke of piston; 46 is the slide valve; 47 is the exhaust pipe; 48 is the piston-rod.

Fig. 17 shows three sections of pipes for evaporator or exchanger; 46 47 48 are three sections of pipes, round and oval respectively; 49 49 49 are wings or flanges, made solid with the pipe or soldered, brazed, or otherwise attached, for increasing the conducting or radiating power of the pipe.

Fig. 18 is a railway carriage fitted up as a travelling cold chamber with non-conducting walls and having the cold-producing machinery worked from one of the axles in a separate compartment; 50 50 are the carriage wheels; 51 is the cooling compartment or store for goods to be carried while kept at a low temperature; 52 is the machine compartment; 53 is the pump; 54 is the cold pipe in the cold chamber.

Having now described my improvements in refrigeration machinery and their mode of operation, I do not claim as novel all the devices and arrangements therein set forth, neither do I confine myself to the exact forms, dimensions, arrangements, and proportions shown on the drawings, as I may interpose exchanges for increasing the economy of the machine and further vary my arrangements and their application in many ways; but what I do claim is,—

Firstly—The construction of an exhausting and condensing pump, either single-acting or compound, in such a way that the piston-rod and its packing are not subjected to the pressure of the vapour or liquid being condensed, so that the liability of leakage and escape of such vapour or liquid is reduced, substantially as shown by the drawings.

Secondly—The general and simple arrangement of my ice-box and cooling chamber, having an ammonia evaporator, and the moulds for holding the water to be converted into ice, all immersed direct in one freezing solution, which solution is circulated in my cooling chamber when desired in the manner before set forth.

Thirdly—The use of pipes having wings or fins attached for the purpose of increasing their conducting or radiating surface for refrigeration purposes.

Fourthly—

Fourthly—The combination of a compound engine and a compound vapour and liquid pump for refrigeration purposes, substantially as set forth.

Fifthly—The cooling of air by passing it through water in which an ammonia evaporator is immersed, and the subsequent drying and distributing such cold air in the manner set forth.

Sixthly—The construction of a mechanical refrigeration machine in a railway carriage, having the motive power taken from the motion of the train through the revolution of one or more of the axles.

Seventhly—The construction of an air condenser or cooler for refrigeration purposes with large surfaces, in such a way that heat is imparted to the atmosphere and a less quantity of condensing water is required for the purpose.

Eighthly—The construction of the cylinders and portions of an engine in such a way that the pressure of ammonia gas or other vapour may be employed either in a simple or compound form, without having such pressure to act on the piston-rod and its packing, in a similar manner and for the same purpose as in my first claim, and substantially as set forth.

Ninthly—The construction of a compound engine for freezing or other purposes, with a valve or valves, cock or cocks, so constructed as to admit the initial pressure of the steam, air, or vapour employed direct to the valve-chest of any cylinder of the series, and so enable a comparatively constant power to be obtained from a variable pressure, or a variable power from a constant pressure of steam, air, or other vapour.

NORMAN SELFE.

This is the amended specification referred to in the annexed Letters of Registration granted to Norman Selfe, this nineteenth day of October, A.D. 1880.

AUGUSTUS LOFTUS.

REPORTS.

Sir, Sydney, 30 August, 1880.

The application of Mr. Norman Selfe for Letters of Registration for an invention for producing artificial cold, styled the "Colonial Freezing Machine," having been referred to us, we have examined the specification and drawings accompanying the same, and have now the honor to report that if the first claim be expunged we see no objection to the granting of Letters of Registration for the remainder. The first claim runs thus: "The production of cold by the use of ammonia freed from water or aqueous vapour and without the direct application of heat." The production of cold in this manner is involved in several patents granted in this Colony, and cannot therefore be included in the protection now asked.

We have, &c.,

The Under Secretary of Justice.

J. SMITH.
CHAS. WATT.

MEMO.—With the amended specification now submitted we consider that Letters of Registration may be granted.

J. SMITH.
CHAS. WATT.

21 September, 1880.

[Drawings—one sheet.]

This is the Sheet of Drawings referred to in the annexed Letters of Registration of Norman Lefevre Sutton dated 9th October A.D. 1880.

"Argyrodite Soldering"

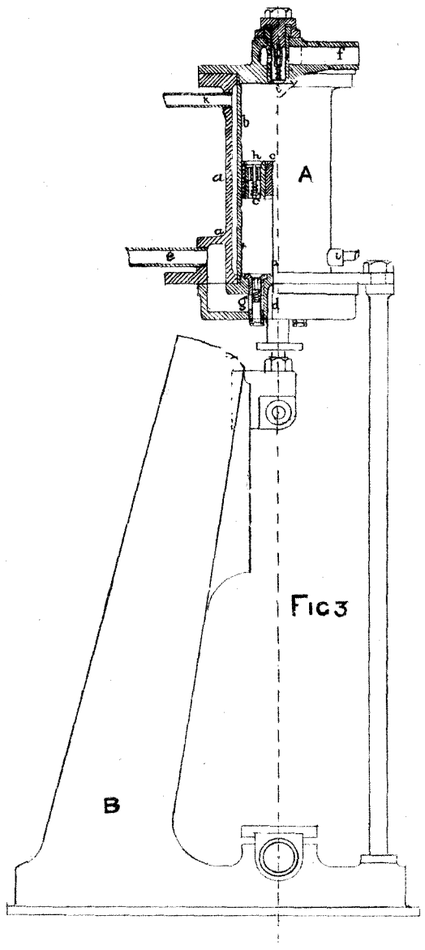

Fig 3

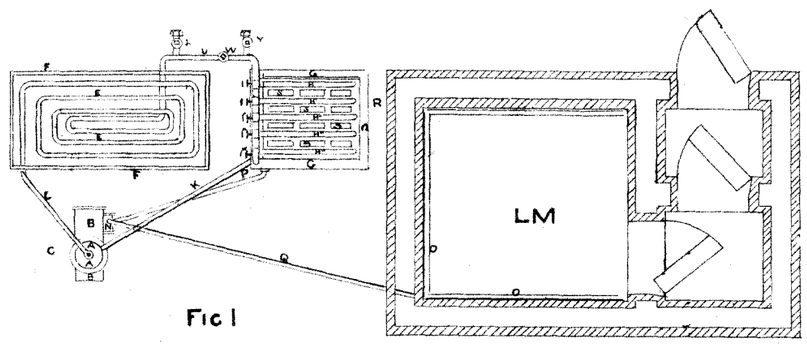

Fig 1

Fig 2

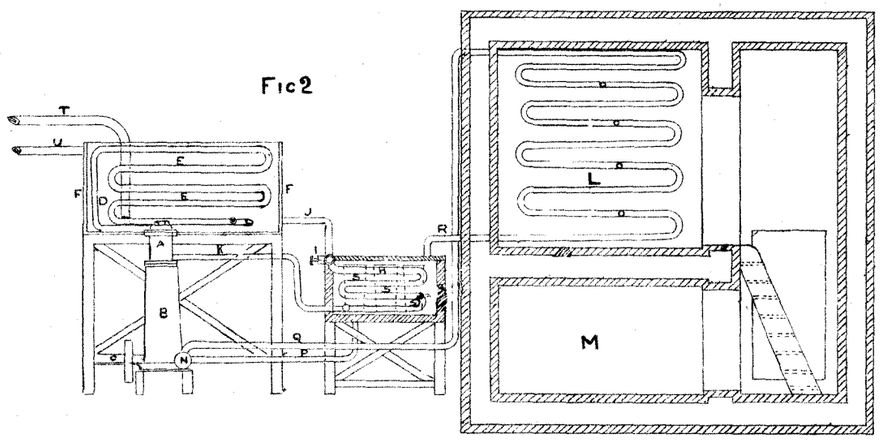

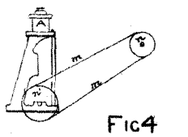

Fig 4

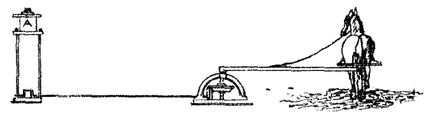

Fig 5

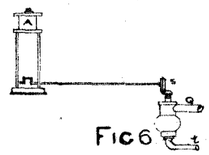

Fig 6

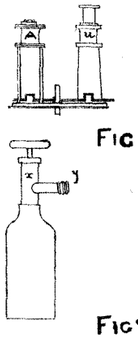

Fig 8

Fig 7

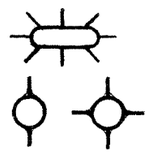

Fig 17

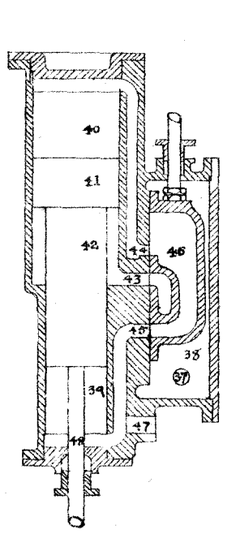

Fig 16

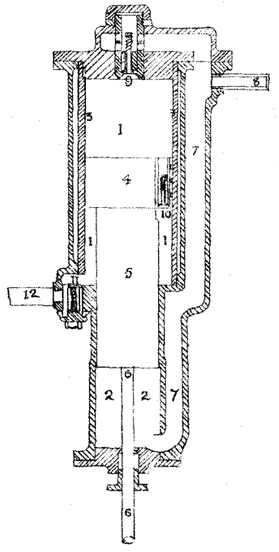

Fig 9

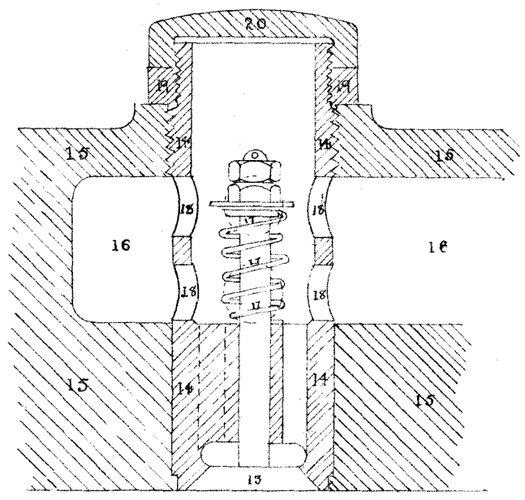

Fig 10

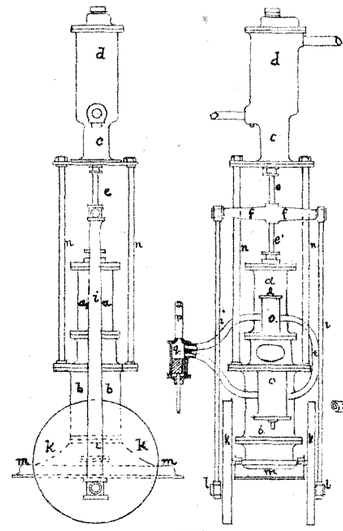

Fig 11

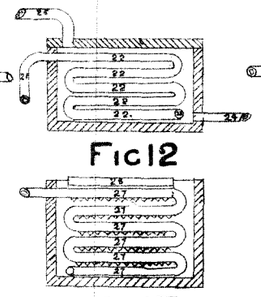

Fig 12

Fig 13

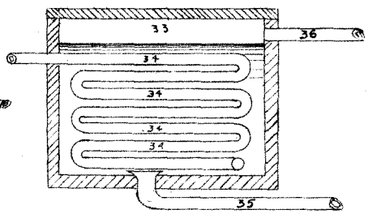

Fig 15

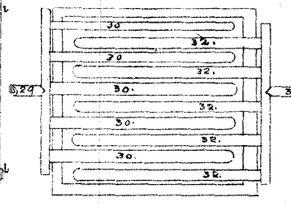

Fig 14

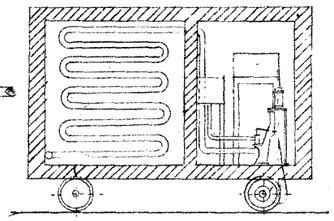

Fig 18

Norman Lefevre Sutton

(Sig: 357)

PHOTO-LITHOGRAPHED AT THE GOVT. PRINTING OFFICE, SYDNEY, NEW SOUTH WALES.

A.D. 1880, 19*th October*. No. 888.

IMPROVEMENTS IN REFRIGERATING CARS.

LETTERS OF REGISTRATION to Kennard Knott, for Improvements in Refrigerating Cars for the transportation of Meat and other perishable articles.

[Registered on the 20th day of October, 1880, in pursuance of the Act 16 Vic. No. 24.]

BY His Excellency the Right Honorable Sir Augustus William Frederick Spencer Loftus (commonly called Lord Augustus Loftus), Knight Grand Cross of the Most Honorable Order of the Bath, a Member of Her Majesty's Most Honorable Privy Council, Governor and Commander-in-Chief of the Colony of New South Wales and its Dependencies.

TO ALL TO WHOM THESE PRESENTS SHALL COME, greeting:

WHEREAS Kennard Knott, of London, England, hath by his Petition humbly represented to me that he is the author or designer of a certain invention or improvement in manufactures, that is to say, of an invention for "Improvements in Refrigerating Cars for the transportation of Meat and other perishable articles," which is more particularly described in the amended specification and the sheet of drawings which are hereunto annexed; and that he, the said Petitioner, hath deposited with the Honorable the Treasurer of the said Colony of New South Wales the sum of Twenty Pounds sterling, for defraying the expense of granting these Letters of Registration, as required by the Act of Council, sixteenth Victoria, number twenty-four; and hath humbly prayed that I would be pleased to grant Letters of Registration, whereby the exclusive enjoyment and advantage of the said invention or improvement might be secured to him for a period of fourteen years: And I, being willing to give encouragement to all inventions and improvements in the arts or manufactures which may be for the public good, and having received a report favourable to the prayer of the said Petition, from competent persons appointed, by me to examine and consider the matters stated therein and to report thereon for my information, am pleased, with the advice of the Executive Council, and in exercise of the power and authority given to me by the said Act of Council, to grant, and do by these Letters of Registration grant unto the said Kennard Knott, his executors, administrators, and assigns, the exclusive enjoyment and advantage of the said invention or improvement, for and during the term of fourteen years from the date hereof; to have, hold, and exercise unto the said Kennard Knott, his executors, administrators, and assigns, the exclusive enjoyment and advantage thereof, for and during and unto the full end and term of fourteen years from the date of these presents next and immediately ensuing, and fully to be complete and ended: Provided always, that if the said Kennard Knott shall not, within three days after the granting of these Letters of Registration, register the same in the proper office in the Supreme Court, at Sydney, in the said Colony of New South Wales, then these Letters of Registration, and all advantages whatsoever hereby granted, shall cease and become void.

In witness whereof, I have hereunto set my sign manual, and have caused the present Letters of Registration to be sealed with the seal of the said Colony of New South Wales, at Government House, Sydney, in New South Wales, this nineteenth day of October, in the year of our Lord one thousand eight hundred and eighty.

[L.S.] AUGUSTUS LOFTUS.

A.D. 1880. No. 888.

Improvements in Refrigerating Cars.

SPECIFICATION of KENNARD KNOTT, of London, England, for an invention intituled "Improvements in Refrigerating Cars for the transportation of Meat and other perishable articles."

THIS invention relates to improvements in refrigerating cars for the transportation of meat and other perishable articles; and the object of the improvements is to obtain in a more simple, cheap, and effective manner than hitherto any desired low temperature for the preservation during transportation of meat, fish, poultry, game, and other perishable articles, and to effect a circulation of such cooled air in an air-tight or nearly air-tight car, and also to condense and absorb any dampness in such air, and to purify the said air.

In carrying out my invention, I employ an air-tight or nearly air-tight and non-conducting refrigerating car, and I provide an arrangement (hereinafter described) whereby a constant circulation of cooled, dried, and purified air is kept up in the car.

But to make my invention better understood, I will proceed to describe the same by reference to the accompanying drawing, in which figure 1 is a section of a refrigerator car constructed according to my invention, and figure 2 is an end view of the same. A A is the car rendered non-conducting and air-tight in any suitable manner, and provided with the usual air-tight closing doors; B B are tubular tanks, each standing in a pan or tray, *j*, for receiving the condensed moisture dropping from the said tank. The tanks are supported on tables or scantling a^1, and are provided with tubular air passages *a a*, passing through them horizontally and preferably in a slightly oblique direction as shown. I prefer to make these tanks with inclined sides, as shown, so as to allow the moisture condensed thereon to more easily drain into the collecting pans or trays in which they are placed.

The required cold is produced in the tubular tanks B B, by means of suitable agents, such as fined ice, or ice and salt, and in addition to the purifying chamber F, charcoal or other purifying agent is placed or packed in spaces *n*, in the ends of the car, the inner sides of such spaces being formed of finely perforated zinc or other suitable metal, the said spaces *n* having ventilators or valves H at top and H^1 at bottom, by which the said spaces and consequently the interior of the car may be put in communication with the outside air when the car is stationary; E is a fan or blower, driven from one of the axles of the car; F is a purifying chamber containing charcoal; G is a chamber containing any suitable absorbing agent, such as chloride of calcium; *h* is a delivery pipe from the blower into the car or chamber A; *i*, collecting pipe perforated at one end, the other end opening into the purifying chamber F; *k k*, syphon pipes for discharging the condensed moisture outside the car; *l l*, discharge pipes for the tanks. The action of this improved construction of car when in motion is as follows:—

The tubular tanks B are charged or filled with the freezing agent, and the air in the car or chamber A, passing around and over the tanks B, and through the air passages *a* therein, will be reduced to a very low temperature; any dampness in the air condensed on the tanks B will be collected in the pans or trays *j j*, and will be discharged outside the car through the syphon pipes *k* (as hereinbefore described).

A circulation of the cooled air in the chamber A of the car is effected by the fan or blower E, and the air will be thereby drawn into the purifying chamber F, through the collecting pipe *i*, and will pass over the charcoal therein, by which means the air will be purified; the air will then pass into the chamber G, and any dampness which it may contain will be absorbed by the chloride of calcium or other absorbing agent in the said chamber. The air thus purified and dried will then pass into the blower E, and will be forced into the chamber A of the car through the delivery pipe *h* behind the tank, and will become cooled by passing around and over the tanks and through the air-passages *a a* therein, and will be again distributed through the car. By this arrangement it will thus be seen that a constant circulation of the same cooled, dried, and purified air is kept up in the car A, and the articles stored therein will be kept sweet and fresh for any desired length of time, and at a comparatively small cost. The tanks are charged and emptied through the air-tight closing doors I I at the top of the car, and suitable means are provided for charging and emptying the chambers F and G, and for oiling the blower E. When the car is stationary, the top ventilators H of one end of the car may be opened, and the lower ventilators H^1 of the other end of the car also opened, the other ventilators being closed. By this arrangement the air entering through the upper ventilators and passing over the charcoal in the space *n* will be purified, and will enter the car through the perforated zinc forming the inner lining of the space *n*, the air will be cooled by passing over and through the tanks, the moisture will be collected and discharged (as hereinbefore described), and the air will pass out through the lower ventilators at the other end of the car.

Having thus described the nature of my invention and the best means with which I am acquainted for carrying the same into effect, I wish it to be understood that what I claim is,—

The combination and arrangement of the several parts of my refrigerating cars for the transportation of meat and other perishable articles (as herein described and explained, and as represented in the drawing hereunto annexed).

This is the amended specification referred to in the annexed Letters of Registration granted to Kennard Knott, this nineteenth day of October, A.D. 1880.

AUGUSTUS LOFTUS.

Improvements in Refrigerating Cars.

REPORTS.

Sir, Sydney, 24 March, 1880.

The application of Mr. Kennard Knott for Letters of Registration for "Improvements in Refrigerating Cars for the transportation of Meat and other perishable articles" having been referred to us, we have examined the specification and drawings accompanying the same, and have now the honor to report thereon as follows:—

The applicant says in his specification—"For carrying out my invention I employ an air-tight or nearly air-tight and non-conducting refrigerating car, and I provide an arrangement hereinafter described, whereby a constant circulation of cooled, dried, and purified air is kept up in the car." This, in our opinion, clashes with a claim in the specification of Mr. D. Williams, on which we reported favourably under date 31st January, 1879, which runs thus—"I claim the use of a current of dry air, cooled and purified in the manner set forth, circulating through the interior of an air-tight carriage, chamber, or other receptacle of what kind soever."

If Mr. Knott were to confine his claims simply to the arrangements described and figured, he might possibly have a right to obtain Letters of Registration, although even then we do not think he couldlegally work his "refrigerating car" without the concurrence of the owners of Williams' Patent; but the claim which he makes in the specification before us is too wide. He claims—"The apparatus represented * * * * * that is to say, a refrigerating car or chamber having tubular cooling tanks, with any form of and arrangement of tubes"—but a tank with a coiled tube is embraced in Williams' Patent—"and having purifying chambers or spaces in communication with the atmosphere by means of suitable ventilators." This does not seem consistent with the body of the specification, which describes "an air-tight, or nearly air-tight car." The claim proceeds—"and purifying and absorbing chambers, or vessels, or trays containing any suitable purifying and absorbing agents such as charcoal"—but such purifying chambers containing charcoal are embraced in Williams' specification.

It is evident that the purpose of the apparatus described in the specification before us is identical with that in Williams' specification, namely, to effect a circulation of "dry air, cool, and purified," in the interior of an air-tight or nearly air-tight chamber, and the means adopted are substantially the same, although the arrangements are different. As Williams has actually been granted Letters of Registration for such a circulation, we doubt if any mere alteration of the mechanism can be made the subject of another Patent, but however that may be, the present application distinctly trenches on Williams' Patent, and must therefore be declined.

We have, &c.,
J. SMITH.
CHAS. WATT.

The Principal Under Secretary.

Sir, Sydney, 12 August, 1880.

An amended specification having been submitted to us on behalf of Mr. Kennard Knott, we think that, although the case is not free from doubt, Letters of Registration may now be granted for the arrangements as described and figured; but we must again call attention to the following passage in our previous report (24th March) on Mr. Knott's application:—"We do not think he could legally work his refrigerating car without the concurrence of the owners of Williams' Patent.

We have, &c.,
J. SMITH.
CHAS. WATT.

The Under Secretary of Justice.

May be referred to the Crown Solicitor before preparing Minute for the Executive Council.—C.W., 14/8/80.

Sir, Crown Solicitor's Office, Sydney, 1 September, 1880.

I have the honor to return herewith the papers relating to the application of Mr. Kennard Knott for Letters of Registration, and, with reference to the letter of date 12th August last of Messrs. Smith and Watt, to state that the practice as to granting Patents in England is stated in Higgins' Digest of Cases relating to Patents, page 130, to be that "Where there is a doubt as to the validity of the ground of opposition to a Patent, the proper course is to grant the Letters Patent, as an error in refusing them would be irremediable, while one in granting them would not"; and further, that "unless a Patent is clearly bad, the Lord Chancellor will not refuse to seal it, as the effect of refusal, if erroneous, would be irremediable; whereas the sealing of a bad Patent leaves every one at liberty to dispute it." On the principle of the cases quoted as above, it would seem that if, as the Examiners suggest, Mr. Knott cannot work his Patent without the concurrence of the owners of Williams' Patent, that is no reason for refusing his application for registration. If he infringes the rights of the owners of Williams' Patent, they will have a remedy against him for his so doing.

I have, &c.,
JOHN WILLIAMS,
Crown Solicitor

The Principal Under Secretary.

Refer to Board, 3/9/80. Professor Smith, B.C., 6 Sept., 1880.—C.W.

Improvements in Refrigerating Cars.

It was because we held views similar to those herein expressed that we advised that "Letters of Registration may now be granted for the arrangements as described and figured." To that we simply added a warning which, if communicated to the applicant, might tend to obviate future litigation.

J. SMITH.
CHAS. WATT.

8 September, 1880.

[Drawings—one sheet.]

No. 889.

[Assignment of No. 846. See page 177 of this Return.]

No. 890.

[Assignment of No. 387. See Letters of Registration for 1873, page 131.]

No. 891.

[Sale of one-eighth share in Patent for the improvement of the illuminating and heating powers of gas]

Fig. 2.

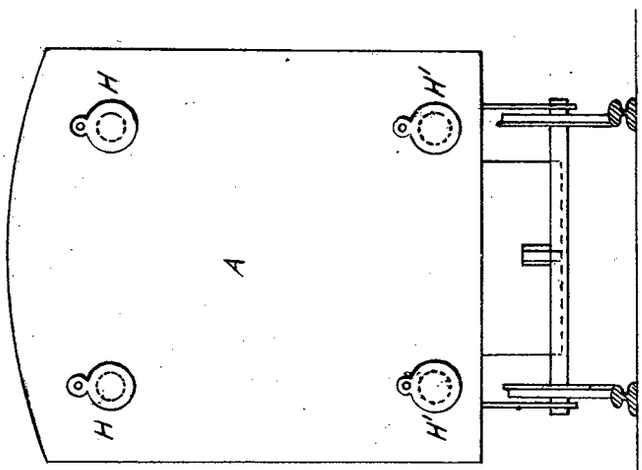

Fig. 1.

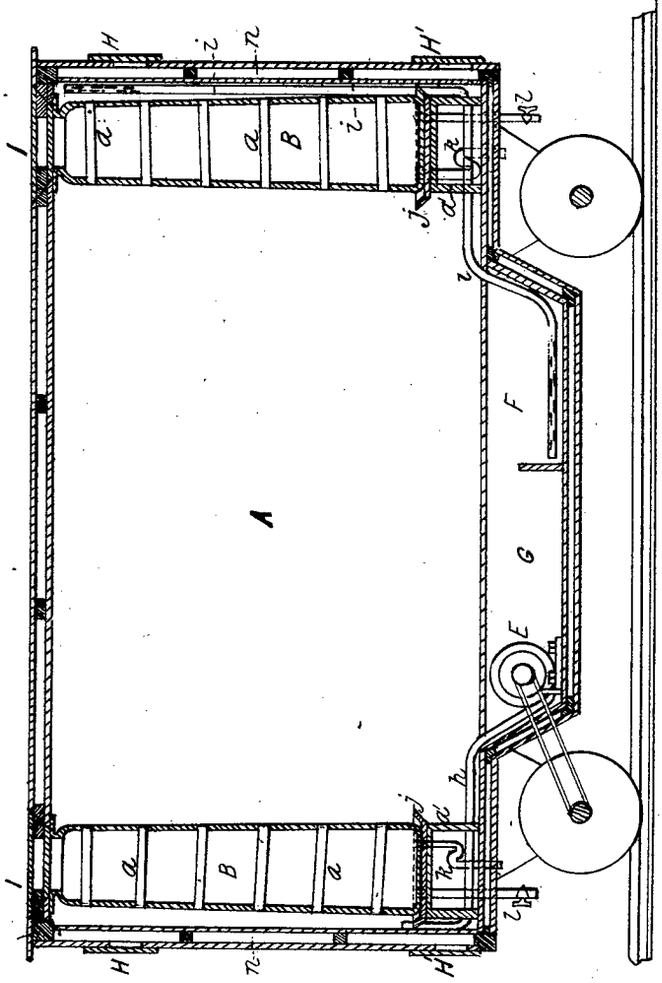

This is the Sheet of Drawings referred to in the annexed Letters of Registration granted to Kennard Knott, this nineteenth day of October, A.D., 1880.

Augustus Loftus.

Kennard Knott

(Sig: 357-)

A.D. 1880, 6*th December*. No. 892.

IMPROVEMENTS IN RAILWAY RAILS AND TRAMWAY RAILS, &c.

LETTERS OF REGISTRATION to David Smith, for Improvements in Railway Rails and Tramway Rails, and a new mode of repairing the same.

[Registered on the 7th day of December, 1880, in pursuance of the Act 16 Vic. No. 24.]

BY His Excellency the Right Honorable Sir Augustus William Frederick Spencer Loftus (commonly called Lord Augustus Loftus), Knight Grand Cross of the Most Honorable Order of the Bath, a Member of Her Majesty's Most Honorable Privy Council, Governor and Commander-in-Chief of the Colony of New South Wales and its Dependencies.

TO ALL TO WHOM THESE PRESENTS SHALL COME, greeting:

WHEREAS David Smith, of Wallerawang, in the Colony of New South Wales, hath by his Petition humbly represented to me that he is the author or designer of a certain invention or improvement in manufactures, that is to say, of an invention of certain "Improvements in Railway Rails and Tramway Rails, and a new mode of repairing the same," which is more particularly described in the specification, marked A, and the three sheets of drawings, marked B, C, and D, respectively, which are hereunto annexed; and that he, the said Petitioner, hath deposited with the Honorable the Treasurer of the said Colony of New South Wales the sum of Twenty Pounds sterling, for defraying the expense of granting these Letters of Registration, as required by the Act of Council, sixteenth Victoria, number twenty-four; and hath humbly prayed that I would be pleased to grant Letters of Registration, whereby the exclusive enjoyment and advantage of the said invention or improvement might be secured to him for a period of fourteen years: And I, being willing to give encouragement to all inventions and improvements in the arts or manufactures which may be for the public good, and having received a report favourable to the prayer of the said Petition, from competent persons appointed by me to examine and consider the matters stated therein and to report thereon for my information, am pleased, with the advice of the Executive Council, and in exercise of the power and authority given to me by the said Act of Council, to grant, and do by these Letters of Registration grant unto the said David Smith, his executors, administrators, and assigns, the exclusive enjoyment and advantage of the said invention or improvement, for and during the term of fourteen years from the date hereof; to have, hold, and exercise unto the said David Smith, his executors, administrators, and assigns, the exclusive enjoyment and advantage thereof, for and during and unto the full end and term of fourteen years from the date of these presents next and immediately ensuing, and fully to be complete and ended: Provided always, that if the said David Smith shall not, within three days after the granting of these Letters of Registration, register the same in the proper office in the Supreme Court, at Sydney, in the said Colony of New South Wales, then these Letters of Registration, and all advantages whatsoever hereby granted, shall cease and become void.

In witness whereof, I have hereunto set my sign manual, and have caused the present Letters of Registration to be sealed with the seal of the said Colony of New South Wales, at Government House, Sydney, in New South Wales, this sixth day of December, in the year of our Lord one thousand eight hundred and eighty.

[L.S.] AUGUSTUS LOFTUS.

Improvements in Railway Rails and Tramway Rails, &c.

A.

SPECIFICATION.

TO ALL TO WHOM THESE PRESENTS SHALL COME, I, DAVID SMITH, of Wallerawang, in the Colony of New South Wales, send greeting :

WHEREAS I am desirous of obtaining Letters Patent of Registration for securing unto me Her Majesty's special license that I and my executors, administrators, and assigns, or such others as I or they should or may at any time agree with, and no others, should and lawfully might from time to time, and at all times during the term of fourteen years, to be computed from the day on which this instrument is left at the office of the Colonial Secretary, at Sydney, in the Colony of New South Wales, make, use, and exercise, and vend within the Colony an invention for improvements in railway rails and tramway rails, and the mode of repairing and re-rolling old or worn-out railway rails and tramway rails; and in order to obtain the said Letters of Registration I must, by an instrument in writing under my hand and seal, particularly describe and ascertain the nature of the said invention and in what manner the same is to be performed : Now know ye that I, David Smith, do hereby declare the nature of the said invention and the manner performed to be described and ascertained in and by the following statement and description, reference being had to the drawings hereunto annexed and to the letters and figures marked thereon, which indicate the parts there referred to and herein particularly described, that is to say,—this invention has reference to the mode of constructing railway rails and tramway rails. When these are constructed of wood I use two wood rails so placed as to break joint with each other, and mortised or dovetailed into the cross-sleepers every yard.

When the rail is constructed or compounded of wood and iron or steel I use two wood rails and the iron or steel of the shape called T iron, which I place to break joint the one with the other, and the three pieces bolted together every yard. When the rail is constructed of iron or steel, I use two or four pieces to form the body of the rail and a separate head (this is as hard as it will work without breaking).

Drawing No. 1 shows full size, an iron and one steel rail, made of two parts, each part so placed as to break joint with the other.

A is the part on which there is no wear, and consequently will last an indefinite time; the other part B will be the part only requiring renewal, thus saving half the cost of renewals and the cost of the carriage of the old metal to the works and the new parts of the rail from the works to the site on which they have to be used. The bolt C I place 36 inches apart, the compound I fix in chairs similar to those now in use for bull-head rails.

The advantages arising from the use of this rail consist in the abolition of the customary fish-plates, which at their best only enable the joints of the rail to sustain a load of one-third the weight the body of the rail will carry. It also eliminates all shocks occasioned by the rail in front of the wheels standing up above the level of the rails upon which the wheels are carried. This in many instances, when the fish-plates have worked loose, has been one quarter of an inch. The effect of these knocks is shown in the ends of the rails in many instances being destroyed before the other part of the rail is worn out. This mode of construction admits of the head of the rail being made as wide as it is necessary, as the sides may be made to support the outside. Some engineers advocate a rail-head $3\frac{1}{2}$ inches and even 4 inches wide. With this plan it can be obtained; but with the old pattern head, supported by the centre web, it is not practicable, unless very much more depth is put into the head.

When the top of this rail is worn out the part B can be supplied, and the part A will last for (say) 100 years, thus saving half the cost of renewals and one-half the cost of the carriage of the old rails back to the works and of the new rails from the manufactory to the railway.

The cost of rolling two rails in place of one is only a few shillings per ton.

Drawing No. 2 shows the mode of making the rail of steel or iron in three parts; stopped at the dotted line O it forms a railway rail; as shown it forms a tramway rail, bolted every yard as shown C, and fixed on wood sleepers of the usual dimensions—8 feet 9 inches by $4\frac{1}{2}$ inches—and placed 36 inches from centre to centre.

When this compound rail is used for tramways, I use square-headed $\frac{3}{4}$-inch screws with wood thread, or bolts and nuts; the nuts I fix on the underside of the sleeper and make fast, both taken out or tightened when required by the aid of a box spanner; when used for ordinary railway, with dog spikes, or in preference bolts through the sleepers and nuts upside.

Drawing No. 3 shows the mode of constructing a compound rail for a railroad, excluding the piece outside, dotted O. When made as shown it forms a tram rail, and inside I fix a core to assist in strengthening the rail and helping to support the two side rails A A.

The advantages to be obtained by the use of this rail are as in No. 2. The sides A A break joint with each other and the head B; the sides are deep to give stiffness when placed upon wood sleepers (usual size 36 inches centre to centre). The broad base of the two rails gives a bearing not likely to beat into the sleepers. The bolts and nuts, every yard well screwed up to the wood core, insures compactness of the whole, and the shape of the head B, supported to the outside, makes it possible to wear down the head, so as to leave the part worn out about 15 lbs. per yard. This weight of old metal (15 lbs.) as compared by the weight of old metal per yard (say) of 60 lbs., in a new 70-lbs. per yard rail, with the carriage of old metal to the works and new rails from the works, and the compound rail ensuring a safer and smoother road, more durable inasmuch as the ends of the head are kept level and they are not smashed by the wheels as the ordinary rails must be when standing up above the level of the line.

Drawing No. 4 shows the rail in five parts, bolted together with $\frac{3}{4}$-inch bolts every yard, with intermediate iron washers S S. This deflection of the joints of a compound rail, when made up of the two side rails and a centre head is perceptible, and injurious both to the road bed and rolling stock, and will be increasingly so when in this country we shall, to economise our freight charges, be compelled to run very much heavier locomotives to pull heavy trains up the unusually steep grades of this Colony. To obviate the deflection at the joints as far as possible, I use a rail made up of four rails and a centre head, as shown A A A A and B.

Drawing

Improvements in Railway Rails and Tramway Rails, &c.

Drawing No. 5. This shows a compound rail intended for a railway where it has been found necessary to use a simple rail of (say) 70 lbs. per yard. When a rail of this weight is required, I use two rails, each (say) 35 lbs. per yard, and in addition I use a head of about the usual weight of a 70-lbs. simple rail. The increased stiffness given by these two rails at the joints will ensure a road of so much more evenness, and the sides being ample to support the weight of the engines, we can put more carbon into the head of the rail when of steel, to very materially increase the hardness, so much as to double or more the life of the rail. When the rail is worn out it will be worn to about the dotted lines, and this will leave the part to be sent back as old steel about 17 lbs. per yard. The wood core D will to some considerable extent assist the strength of the rail as a whole, and very much assist in stiffening the two side rails as in No. 3. When this head B is worn out or down to dotted lines I use it upside down for colliery or light tram-roads, as shown in drawing No. 6.

Drawing No. 6. The making of a compound rail in four or five parts, whereby the shock or hammering at the joints is further and very considerably eliminated, and a further saving is thereby effected in the expense of keeping in repair the road, and a considerable reduction in the cost of repairs and renewals to rolling stock of the railway and a greatly increasing safety and comfort in travelling with this compound system, so truly may every rail be kept in line. It will be practicable to take very nearly the whole of the transverse play, now $\frac{3}{8}$ of an inch or more, thus avoiding a great part of the unsteadiness of the carriages now so generally complained of, and especially if the pace exceeds thirty (30) miles per hour.

In all the drawings A refers to the rails, B to the head, C to the bolts, D to the wood core. 7th. Of a new mode of repairing worn-out iron rails. These I heat to a welding temperature in a re-heating furnace, which I construct of sufficient length to hold the rail. I prefer for this purpose a furnace heated with Siemen's gas. Before introducing the old rail into the furnace I attach to it a piece of iron, either new or old, of a weight to make up and a little over the iron lost in wear by the old rail, and when sufficiently heated I pass the rail and added piece of iron through the ordinary rolls of the section required. Old steel rails I re-heat in a similar manner, and re-roll them into such a section as the steel will permit of. For instance, if I heat a 70-lbs. per yard steel rail, and in wear it has lost 10 lbs. per yard, I re-roll this into a rail about 60 lbs. per yard. I also re-roll iron rails when required into light sections, such as they without any addition of old or new iron are capable of making.

Drawing No. 7. I claim the following advantages from the adoption of this mode of constructing both railroads and light tram or colliery roads. First I use two wood rails, the two of sufficient strength to carry the proposed load; then I bolt together every yard, and let into cross-sleepers (say) every yard on the dovetail plan, as shown at X. I used two wood rails and an iron or steel T rail, of any weight per yard, according to the weight and amount of traffic the road will have to sustain. By the adoption of this compound plan of two wood rails and one of metal, a road equal in strength and infinitely smoother can be had for 58 tons of metal per mile, as against 110 tons in a road where a 70-lbs. per yard rail is now used, effecting a saving in countries where wood is cheap of several hundred pounds sterling per mile.

I claim as new,—

1st—The using of two wood rails to break joint with each other.

2nd—Using two wood rails with T iron or steel to break joint with each other and with the metal.

3rd—The mode of mortising or dovetailing the two wood rails into the cross-sleepers, as shown in drawing No. 7.

4th—Making the knob or double-head rail in two parts, to break joint with each other, and with or without wood core in middle.

5th—The adapting of a compound rail to tram-roads.

DAVID SMITH.

This is the specification, marked A, referred to in the annexed Letters of Registration granted to David Smith, this sixth day of December, A.D. 1880.

AUGUSTUS LOFTUS.

REPORT.

Sir,

Sydney, 18 October, 1880.

In reference to the Petition of David Smith, of Wallerawang, for Letters of Registration for certain "Improvements in Railway and Tramway Rails, and a new mode of repairing the same," forwarded to us B.C. on the 7th instant, we have the honor to state, after examination of the specification, &c., that we see no reason why the Letters applied for should not be issued.

We have, &c.,

JOHN WHITTON.

WILLIAM C. BENNETT.

The Under Secretary of Justice.

[Drawings—three sheets.]

N° 1.

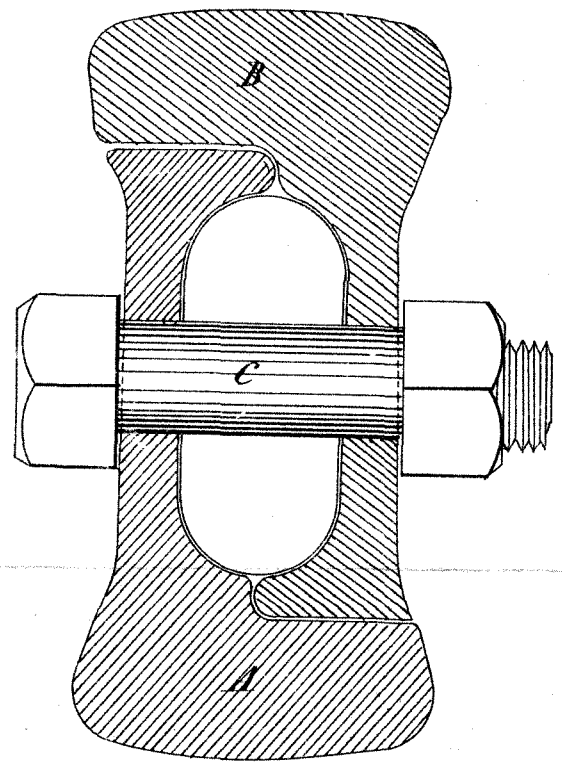

N° 2.

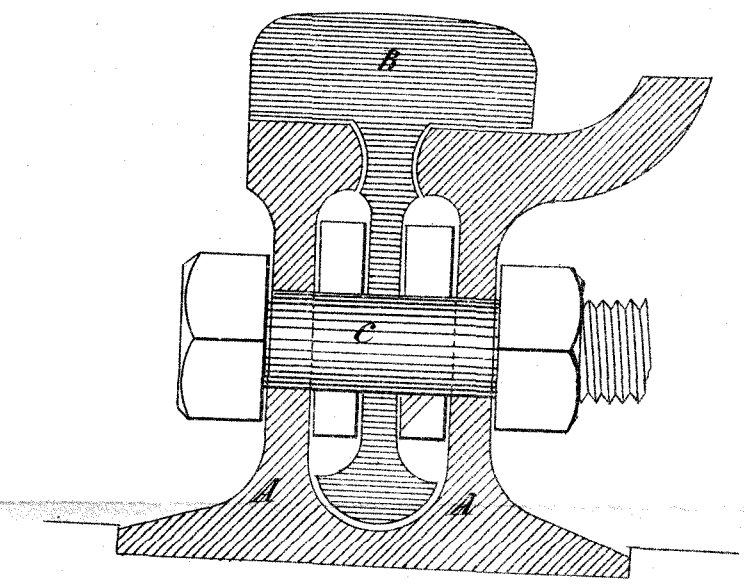

N° 3.

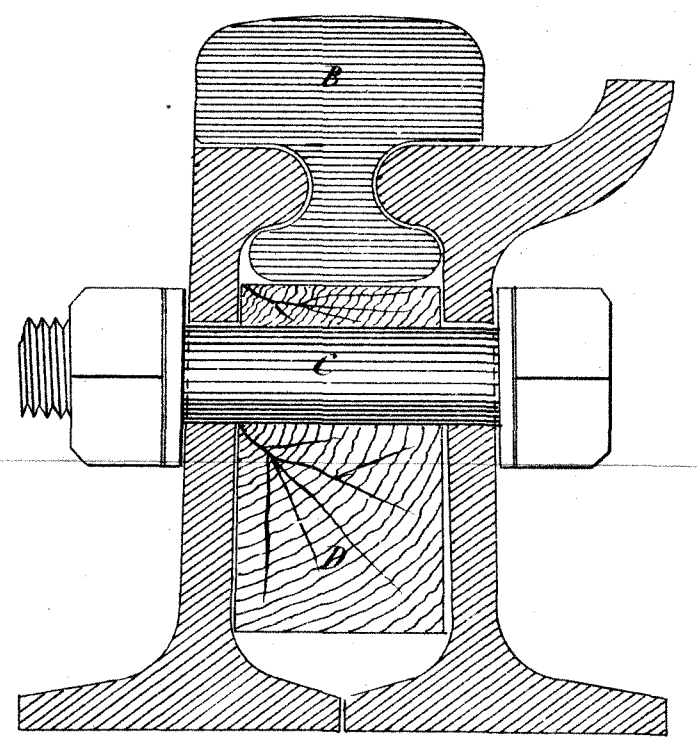

N° 4.

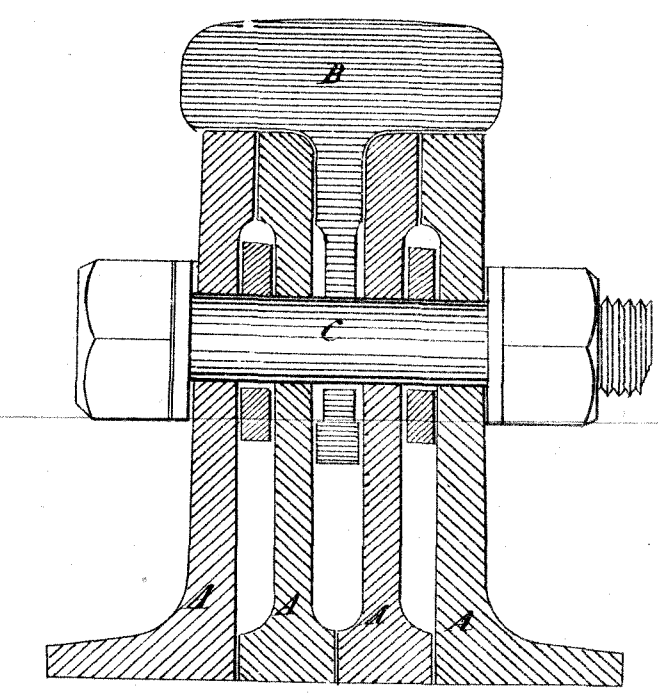

This is the Sheet of Drawings marked B. referred to in the annexed Letters of Registration granted to David Smith, this sixth day of December A.D. 1880.

Augustus Loftus.

David Smith.

Sig 357.

PHOTO-LITHOGRAPHED AT THE GOVT. PRINTING OFFICE
SYDNEY, NEW SOUTH WALES

N°5

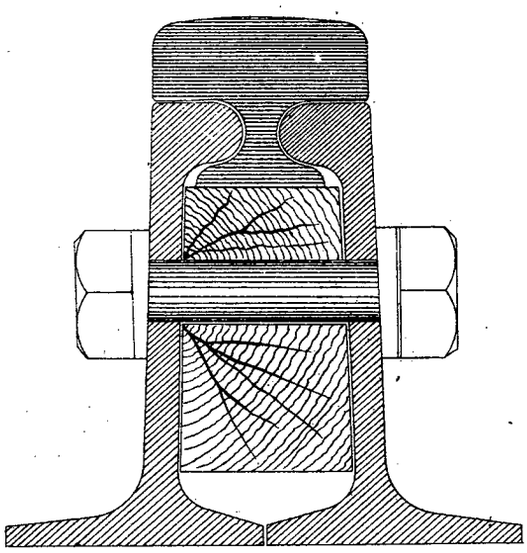

N°6.

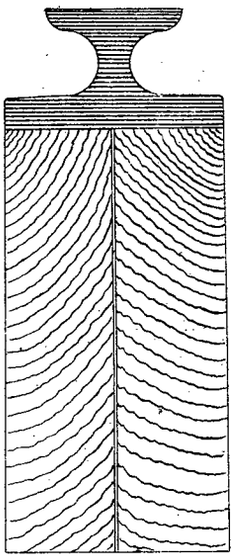

David Smith.

This is the Sheet of Drawings marked C. referred to in the annexed Letters of Registration granted to David Smith, this sixth day of December A.D. 1880.

Augustus Loftus.

PHOTO-LITHOGRAPHED AT THE GOVT. PRINTING OFFICE, SYDNEY, NEW SOUTH WALES.

No 7.

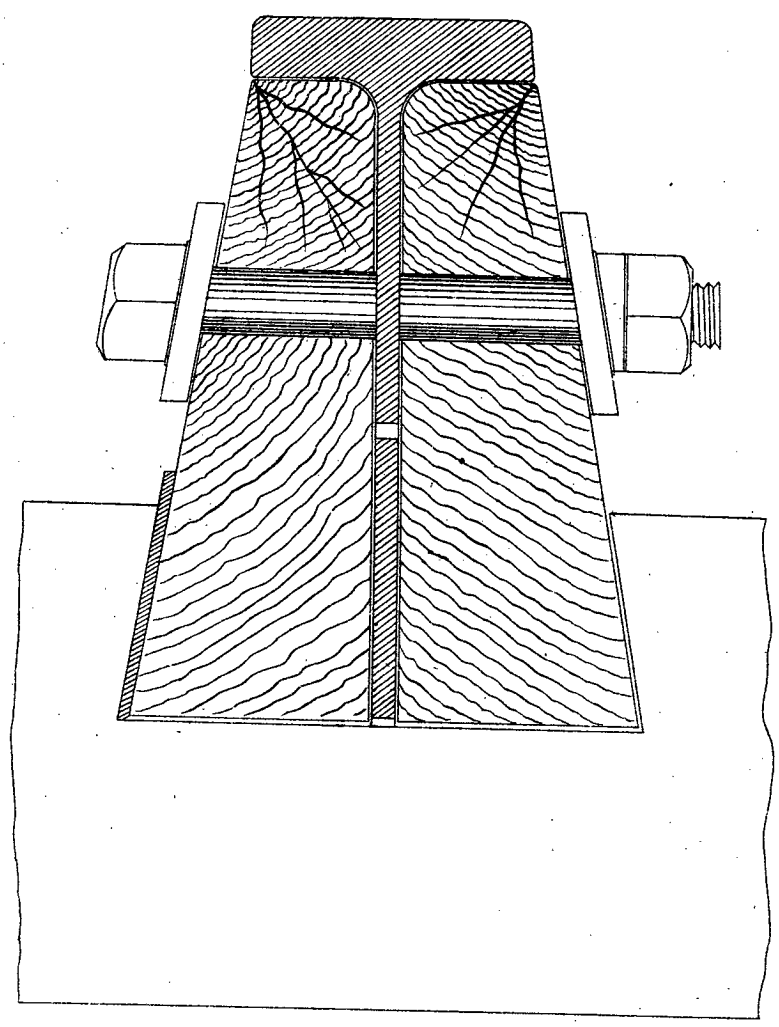

David Smith.

This is the Sheet of Drawings marked D referred to in the annexed Letters of Registration granted to David Smith this sixth day of December A.D. 1880.

Augustus Loftus.

Sig 357

PHOTO-LITHOGRAPHED AT THE GOVT. PRINTING OFFICE, SYDNEY, NEW SOUTH WALES

A.D. 1880, *6th December.* No. 893.

SPENCE'S METAL.

LETTERS OF REGISTRATION to John Berger Spence, for certain Improvements in the manufacture of Metallic Compounds, and in the application of such compounds to various purposes.

[Registered on the 7th day of December, 1880, in pursuance of the Act 16 Vic. No. 24.]

BY His Excellency the Right Honorable Sir Augustus William Frederick Spencer Loftus (commonly called Lord Augustus Loftus), Knight Grand Cross of the Most Honorable Order of the Bath, a Member of Her Majesty's Most Honorable Privy Council, Governor and Commander-in-Chief of the Colony of New South Wales and its Dependencies.

TO ALL TO WHOM THESE PRESENTS SHALL COME, greeting:

WHEREAS John Berger Spence, of Lombard-street, in the City of London, merchant, hath by his Petition humbly represented to me that he is the author or designer of a certain invention or improvement in manufactures, that is to say, of an invention entitled "Certain Improvements in the manufacture of Metallic Compounds, and in the application of such compounds to various purposes," which is more particularly described in the specification which is hereunto annexed; and that he, the said Petitioner, hath deposited with the Honorable the Treasurer of the said Colony of New South Wales the sum of Twenty Pounds sterling, for defraying the expense of granting these Letters of Registration, as required by the Act of Council, sixteenth Victoria, number twenty-four; and hath humbly prayed that I would be pleased to grant Letters of Registration, whereby the exclusive enjoyment and advantage of the said invention or improvement might be secured to him for a period of fourteen years: And I, being willing to give encouragement to all inventions and improvements in the arts or manufactures which may be for the public good, and having received a report favourable to the prayer of the said Petition, from competent persons appointed by me to examine and consider the matters stated therein and to report thereon for my information, am pleased, with the advice of the Executive Council, and in exercise of the power and authority given to me by the said Act of Council, to grant, and do by these Letters of Registration grant unto the said John Berger Spence, his executors, administrators, and assigns, the exclusive enjoyment and advantage of the said invention or improvement, for and during the term of fourteen years from the date hereof; to have, hold, and exercise unto the said John Berger Spence, his executors, administrators, and assigns, the exclusive enjoyment and advantage thereof, for and during and unto the full end and term of fourteen years from the date of these presents next and immediately ensuing, and fully to be complete and ended: Provided always, that if the said John Berger Spence shall not, within three days after the granting of these Letters of Registration, register the same in the proper office in the Supreme Court, at Sydney, in the said Colony of New South Wales, then these Letters of Registration, and all advantages whatsoever hereby granted, shall cease and become void.

In witness whereof, I have hereunto set my sign manual, and have caused the present Letters of Registration to be sealed with the seal of the said Colony of New South Wales, at Government House, Sydney, in New South Wales, this sixth day of December, in the year of our Lord one thousand eight hundred and eighty.

[L.S.] AUGUSTUS LOFTUS.

SPECIFICATION

Spence's Metal.

SPECIFICATION of JOHN BERGER SPENCE, of Lombard-street, in the City of London, merchant, for an invention entitled "Certain Improvements in the manufacture of Metallic Compounds, and in the application of such compounds to various purposes."

MY invention consists in combining metallic sulphides with sulphur, for the production of a material which is applicable to various purposes in the arts.

In carrying out my invention I prefer to use the natural metallic sulphides, either singly or mixed, but preferable those of iron and copper. These natural ores I grind to an impalpable powder, and combine them by any suitable mechanical means with the sulphur while the sulphur is at a melting point. On cooling, the compound will possess great hardness and tenacity, and will have a metallic lustre. This compound I propose to designate as "Spence's metal."

The proportion of the sulphur combined with the metallic sulphide or sulphides may vary from 10 to 40 per cent., according to the quality of the metal it is desired to produce; but I have found that for general use the addition of about 30 per cent. of sulphur will give good and useful results, a less proportion of sulphur producing a harder metal, and a greater proportion a softer metal.

The material thus obtained may be used for a great variety of purposes, both useful and ornamental. Thus, for example, when in a molten state it may be cast into various forms, such as statuary, vases, medallions, columns, mouldings, cornices, and other ornamental work for buildings; hip, ridge, or other tiles, and gutters for roofs; or slabs and blocks for building purposes generally; for making drain or other pipes, either alone or in combination with other materials. The material may also be used whenever in a molten state for filling in the joints between the tiles and between the lengths of gutter instead of mortar, cement, or solder, or instead of lead for stopping the joints of pipes.

The material may also be employed for obtaining reproductions from complicated works of art by casting in elastic moulds; it will also serve for taking impressions from engraved copper or steel plates, or for making stereotype plates.

It may also be used in the place of cement for plastering purposes generally. For this purpose I add only a small percentage of sulphur, which will give when in a heated state a plastic material capable of being readily worked with a trowel.

It may also be used in the molten state as an enamel or paint for coating blocks and wall surfaces, for the lining of cisterns, drain and other pipes; for the protection of metal from oxidation, and of wood from decay, and for kindred purposes; for insulating telegraph wires, or for sealing bottles containing wine or other liquors. The material may be applied with a brush to the various surfaces, or in case of pipes may be run through them in the liquid state. For insulating purposes, the wires are drawn slowly through a bath of the heated liquid; and for sealing bottles, the corks and necks are simply dipped therein.

I also propose to employ this metallic sulphide compound in place of sulphur when manufacturing vulcanized india-rubber and equivalent compounds. It will also be useful for coating paper and textile fabrics, for rendering the same impervious to moisture. It may also be used in admixture with tar or pitch for asphalte. In some cases I may mix with the compound fibrous material to increase the strength. The colour of the material, which is naturally a dark grey or nearly black, I modify by introducing into the mixture any suitable colouring matter.

The material, when cool and ground to a fine powder and mixed with oil, will produce a paint of great density and body.

It may also be used to form a substitute for marble, and for this purpose it will have advantages over other artificial marbles, as it is unaffected by the action of the atmosphere and weather. To make the veining, I use sulphur in the liquid state, which I mix with any suitable colouring matter, and with a brush or piece of wood I draw lines, or make other marks to resemble veining, with this compound on the surface of the mould in which the slab or other article is to be cast, and then run in the required quantity of the metal.

Having now described the nature of my invention, and explained the manner of carrying the same into effect, I wish it to be understood that I claim—

The manufacture of fusible compounds from metallic sulphides and sulphur, as above described, and the application of such compounds to the various uses above set forth.

In witness whereof, I, the said John Berger Spence, have hereto set my hand and seal, this fifth day of August, 1880.

J. BERGER SPENCE.

Witness—
H. K. WHITE,
66, Chancery-lane, London.

This is the specification referred to in the annexed Letters of Registration granted to John Berger Spence, this sixth day of December, A.D. 1880.

AUGUSTUS LOFTUS.

REPORT.

Sir,

Sydney, 18 October, 1880.

We have the honor to return herewith the papers having reference to the application of Mr. John Berger Spence for Letters of Registration for "Certain Improvements in the manufacture of Metallic Compounds, and in the application of such compounds to various useful purposes." Having perused the specification, we beg to recommend that the application be granted.

We have, &c.,
CHAS. WATT.
E. C. CRACKNELL.

The Under Secretary of Justice.

A.D. 1880, 6*th December*. No. 894.

IMPROVEMENTS IN THE PRODUCTION OF LIGHT AND HEAT, AND IN APPARATUS FOR SAME.

LETTERS OF REGISTRATION to Quentin Leon Brin, for Improvements in the production of Light and Heat, and in Apparatus for same.

[Registered on the 7th day of December, 1880, in pursuance of the Act 16 Vic. No. 24.]

BY His Excellency the Right Honorable Sir Augustus William Frederick Spencer Loftus (commonly called Lord Augustus Loftus), Knight Grand Cross of the Most Honorable Order of Bath, a Member of Her Majesty's Most Honorable Privy Council, Governor and Commander-in-Chief of the Colony of New South Wales and its Dependencies.

TO ALL TO WHOM THESE PRESENTS SHALL COME, greeting:

WHEREAS Quentin Leon Brin, of Shepherd's Bush, in the county of Middlesex, England, hath by his Petition humbly represented to me that he is the author or designer of a certain invention or improvement in manufactures, that is to say, of an invention entitled "Improvements in the production of Light and Heat, and in Apparatus for same," which is more particularly described in the specification and the sheet of drawings which are hereunto annexed; and that he, the said Petitioner, hath deposited with the Honorable the Treasurer of the said Colony of New South Wales the sum of Twenty Pounds sterling, for defraying the expense of granting these Letters of Registration, as required by the Act of Council, sixteenth Victoria, number twenty-four; and hath humbly prayed that I would be pleased to grant Letters of Registration, whereby the exclusive enjoyment and advantage of the said invention or improvement might be secured to him for a period of fourteen years; and I, being willing to give encouragement to all inventions and improvements in the arts or manufactures which may be for the public good, and having received a report favourable to the prayer of the said Petition, from competent persons appointed by me to examine and consider the matters stated therein and to report thereon for my information, am pleased, with the advice of the Executive Council, and in exercise of the power and authority given to me by the said Act of Council, to grant, and do by these Letters of Registration grant unto the said Quentin Leon Brin, his executors, administrators, and assigns, the exclusive enjoyment and advantage of the said invention or improvement, for and during the term of fourteen years from the date hereof; to have, hold, and exercise unto the said Quentin Leon Brin, his executors, administrators, and assigns, the exclusive enjoyment and advantage thereof, for and during and unto the full end and term of fourteen years from the date of these presents next and immediately ensuing, and fully to be complete and ended: Provided always, that if the said Quentin Leon Brin shall not, within three days after the granting of these Letters of Registration, register the same in the proper office in the Supreme Court, at Sydney, in the said Colony of New South Wales, then these Letters of Registration, and all advantages whatsoever hereby granted, shall cease and become void.

In witness whereof, I have hereunto set my sign manual, and have caused the present Letters of Registration to be sealed with the seal of the said Colony of New South Wales, at Government House, Sydney, in New South Wales, this sixth day of December, in the year of our Lord one thousand eight hundred and eighty.

[L.S.] AUGUSTUS LOFTUS.

SPECIFICATION

Improvements in the production of Light and Heat, and in Apparatus for same.

SPECIFICATION of QUENTIN LEON BRIN, of Shepherd's Bush, in the county of Middlesex, England, for an invention entitled "Improvements in the production of Light and Heat, and in Apparatus for same."

THE object of this invention is to produce a steady, regular and economic light for illuminating purposes, by burning sticks of carbon called electric candles, or any other pieces of carbon or other carbonaceous material or composition, by contact with a current or currents of oxygen.

The combustion may take place in the open air, but for the purpose of economy I prefer to burn it in a closed globe.

The carbon stick in action passes through a guide tube and rests on the perforated end of the oxygen supply pipe, which is fitted with regulating cock.

The guide tube is below a carbon stick supply reservoir, having a slanting bottom. When the top of the stick in action by the burning away of its lower end has descended so far as to be flush with the bottom of this reservoir, a spring or springs force the next following carbon stick to take its place on the top of it.

When the carbon burns in a closed globe, there is a pipe for conveying the products of combustion (chiefly carbonic acid) away to a chamber containing lime or soda, or other material suitable for absorbing the carbonic acid, so as to liberate the oxygen, which collects in a gas-holder, and is then available for lighting again.

When the apparatus is to be used for heating purposes, I may use one or more carbon sticks placed in a slanting or horizontal position, and so that their points meet the jets of oxygen.

The oxygen may be produced in any well known manner, for instance, by causing sulphuric acid to pass through retorts containing siliceous material; the oxygen produced then passes to a reservoir, when it is drawn by a pump which compresses it to (say) four atmospheres, separating the sulphurous acid therefrom, the oxygen then passes through a washer and then to the gas-holder.

And in order that the said invention may be more easily understood and readily carried into effect, I will now proceed to describe the same with reference to the accompanying drawings.

Referring to that part of this invention which relates to the feeding of the carbon to the carbon-holder, figure 1 is a general elevation; figure 2 is a plan; figure 3 is an enlarged sectional part elevation; and figure 4 is a sectional plan on line $x\,y$ of figure 3, of apparatus constructed according to this part of the invention. For this purpose I form an outer tube or cylinder u; inside this tube is another tube, r, figure 3, with a slanting bottom, or of a conical or funnel shape, so as to direct the fall of the carbon stick towards the centre. The exterior of this tube r is a suitable distance from the interior of the outer tube u, to allow for the thickness of the carbons, which stand in a vertical position inside the outer tube u, which on the interior is formed with a half round guide for each carbon, which guides also prevent friction between the carbons; these are arranged around the inner tube r, and rest at their bottom end on a slanting bottom u^1, which assists in conveying the carbons to the carbon-holder q. The inner tube r is provided with a vertical slot on one side at its uppermost part, for the purpose of allowing the carbon sticks to pass into its inner part and thence down into the carbon-holder q. This conical inner tube r is provided at the lower extremity of the cone with a bevel wheel a, which is driven by another bevel wheel a^1 connected to clockwork mechanism A, which is actuated by a spring in the usual manner. I attach to this clockwork mechanism an additional wheel, b, having arms projecting from its periphery; and to make this part of my invention more readily understood, I will describe the mode of operation as follows:—When a carbon stick has been consumed a certain distance the clockwork mechanism is caused to operate, which imparts rotary motion to the inner tube r through the pair of bevel wheels $a\,a^1$. This tube r is rotated until the vertical slot in the same comes nearly opposite to a carbon stick, which then falls from its place between the outer and the inner tubes and slides down into the carbon-holder q. The carbon stick in passing down the holder comes in contact with a small friction wheel p, which is attached to one end of an arm, p^1. This arm is pivoted at p^2 (by preference equidistant) to the outer part of the carbon-holder. The other end of this arm p^3 engages with the wheel b, having projecting arms, and checks or releases the clock mechanism as the case may be. The pivoted lever p^1 is caused to rise or fall, for instance when a whole carbon is in the holder this end p^3 of the rod will be down; but when the carbon has been so far consumed as to be below the friction roller, the said roller p, assisted by the counterbalance weight o, will fall towards the interior of the carbon-holder, and so raise the outer end p^3 of the arm and release the clock mechanism, by which the inner conical tube r is rotated and another carbon fed into the carbon-holder. In figure 1 x is a bolt to stop or set going the clockwork mechanism as required. The carbon-holder and clockwork mechanism is connected to the outer tube u, which is carried a slight distance on the one side of the pedestal by means of an arm B, as shown in figure 1. In this figure C is the pedestal; D is a tube or burner for conveying the oxygen gas to the lower point or part of the carbon.

A modification of this arrangement is shown in figures 5, 6, and 7, showing respectively a side elevation partly in section, a front elevation and a plan.

The pedestal C carries an overhanging platform, b, which carries on its underside the clockwork mechanism A and the carbon-holder q. The clockwork mechanism is similar to that described with reference to figures 1 and 3; but in this case I extend one of the pivots of the wheels (by preference c) through the platform or table b, and on this pivot I fix a barrel containing (say) eight chambers for carrying the carbon sticks. By referring to figure 5 it will be seen that the tube q (for holding the carbons during their combustion) comes opposite to the chambers n on the one side of the barrel.

Further, in order that this, my invention, may be clearly understood, I will now describe the mode of operation. The chambers n are filled with the requisite number of carbons, and the one on the side nearest the holder q will fall through the said holder q and rest on a suitably formed tube or burner, such as those shown in figures 8, 9, 10, and 11. Figure 8 is an enlarged vertical section; and figure 9 a plan of a burner tube—the oxygen gas from the gas reservoir passes out through a number of small holes which all incline towards the centre, so as to cause a number of jets to impinge against the lower end of the carbon. Figure 10 is a vertical section; and figure 11 a plan of another form of burner tube, formed with two annular openings, which also produce jets projected towards the centre. When the carbon has been consumed so that the small friction wheel p assumes the position shown in dotted lines the wheel b and clockwork

clockwork mechanism is released, by which the chambers receive a partial revolution. Another chamber is thus brought opposite the holder *q*, together with another carbon which is fed into the said holder *q*. This second carbon rests on the top of the previous one, and in its downward movement the friction wheel will again be brought in tension, and the wheel *b* again locked until this second carbon has been partly consumed, when the same action will take place, and so on.

Figure 12 shows a carbon and gas burner enclosed in a closed globe, E; the products of combustion (chiefly carbonic acid) are carried away by the pipe F to the dome chamber G, containing an absorbent material such as lime or soda by preference, for absorbing the carbonic acid as before described. H is a counterbalance weight, which rises and falls as the air is exhausted out of the globe E.

Figure 13 is another view, showing the apparatus burning in the open air. I I are semicircular rods for carrying the carbon-holder *q*.

Although I have only described my invention relatively to round sticks of carbon, I would have it understood I may use other forms; thus, for a large burner, I may use a carbon or carbonaceous body made in the form of a flat straight or curved plate or slab. In figure 14 I have shown a section of a flat straight slab; the jets of oxygen are projected against it in the same manner as above described.

Figure 15 is a plan view of a burner for burning petroleum or other light or heavy hydro-carbon liquid body, with jet or jets of oxygen. The outer annular part *x* is filled with a wick, which is constantly drawing the liquid from a reservoir by capillary action or otherwise. In the interior circle there is a circular row of very small tubes, *y*, which convey the oxygen gas to the burner, as before described with reference to figures 8 and 9. Figure 16 is a side elevation of this burner, on the top of which is placed a deflector plate, Z. Figure 17 shows the burner alight. In figure 18 is shown a plan of a burner in which the oxygen issues through a narrow annular space *y*, similar to that described with reference to figures 10 and 11. This burner is also provided with a deflector plate, and burns in a similar manner to that in figure 17. Figure 19 is a plan of double wick burner; *x x* are the wick tubes containing wick; and *y y* narrow tubes for projecting the oxygen on to the wick. Figure 20 shows an arrangement of a single wick with a row of oxygen jet tubes on each side.

Having now described the nature of the said invention, and in what manner the same is to be performed, I declare that I am aware that it has been before proposed, and consequently is not new to use or project a hydrogen gas alone, or such gas and heated air against lime, platinum, or other substance which becomes incandescent when subjected to heat; but I claim as the aforesaid "Improvements in the production of Light and Heat, and in apparatus for same,"—

First—The use or employment of a current or currents of oxygen projected or carried to carbon sticks, known as electric candles, or sticks or other bodies of or containing a carbonaceous solid or liquid material or composition, and by igniting the said oxygen when in contact with the carbon material, the production of light and heat by the combination of the oxygen and carbon substantially in the manner set forth.

Second—The apparatus described and illustrated with reference to all the figures of the accompanying drawings, and for the purposes set forth.

In witness whereof I, the said Quentin Leon Brin, have hereto set my hand and seal, this twelfth day of July, one thousand eight hundred and eighty.

QUENTIN LEON BRIN.

This is the specification referred to in the annexed Letters of Registration granted to Quentin Leon Brin, this sixth day of December, A.D. 1880.

AUGUSTUS LOFTUS.

REPORT.

Sir, Sydney, 23 October, 1880.

We have examined the application of Mr. Quentin Leon Brin for Letters of Registration for "Improvements in the production of Light and Heat, and in apparatus for same," and have now the honor to report that we see no objection to the issue of Letters of Registration in accordance with the specification and drawings submitted.

We have, &c.,

J. SMITH.

The Under Secretary of Justice. GOTHER K. MANN.

[Drawings—one sheet.]

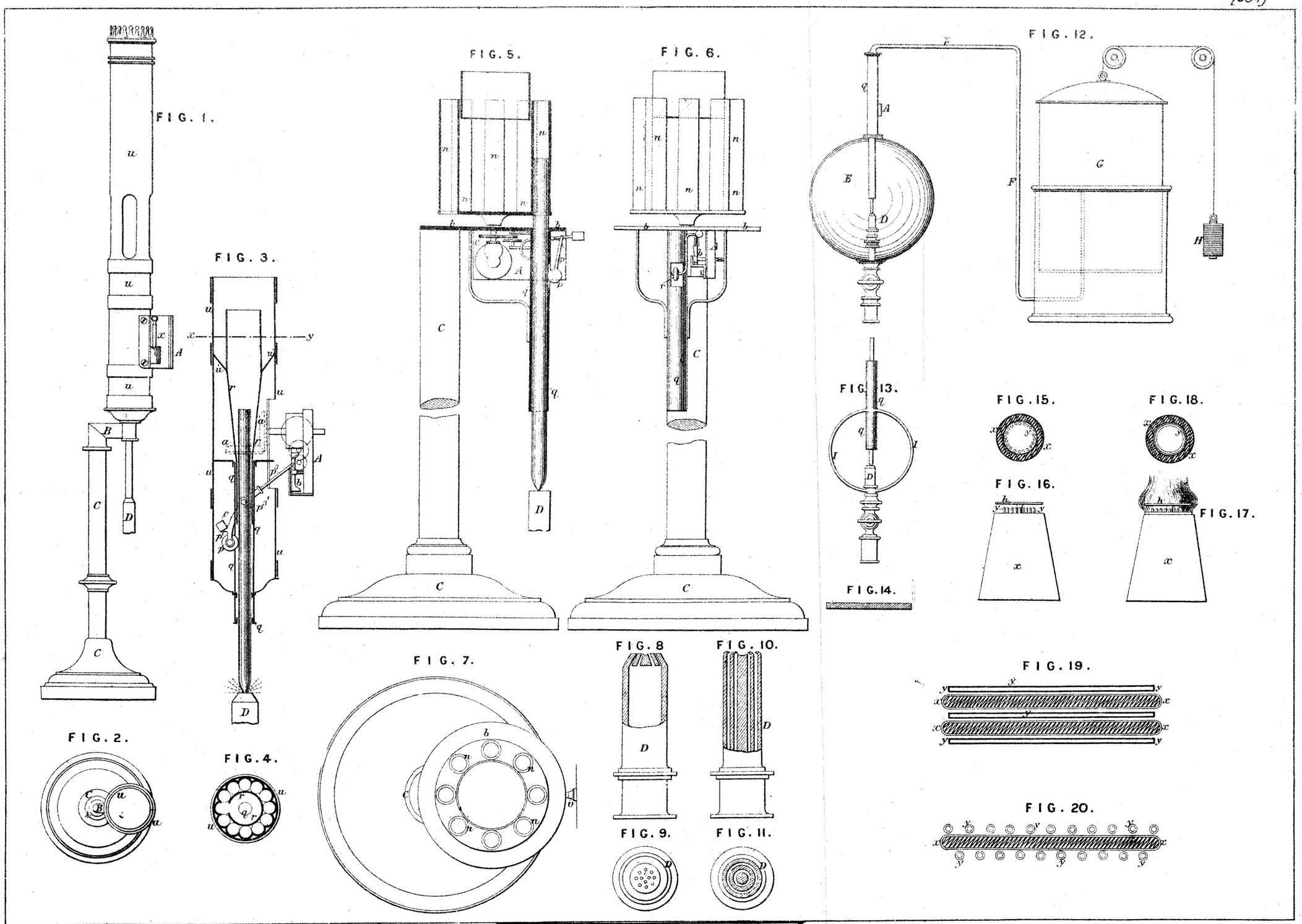

This is the Sheet of Drawings referred to in the annexed Letters of Registration granted to Quentin Leon Trino this Sixth — day of December — AD 1880.

(Sig. 357-)

Augustus Softus

PHOTO-LITHOGRAPHED AT THE GOVT. PRINTING OFFICE, SYDNEY, NEW SOUTH WALES.

A.D. 1880, *6th December.* No. 895.

IMPROVEMENTS IN TANNING.

LETTERS OF REGISTRATION to Heinrich Trenk, Jean Ballatschano, and Constantin Ballatschano, for Improved Processes and Compositions for the Tanning and Condensing of Hides or Skins.

[Registered on the 7th day of December, 1880, in pursuance of the Act 16 Vic. No. 24.]

BY HIS EXCELLENCY THE RIGHT HONORABLE SIR AUGUSTUS WILLIAM FREDERICK SPENCER LOFTUS (commonly called LORD AUGUSTUS LOFTUS), Knight Grand Cross of the Most Honorable Order of the Bath, a Member of Her Majesty's Most Honorable Privy Council, Governor and Commander-in-Chief of the Colony of New South Wales and its Dependencies.

TO ALL TO WHOM THESE PRESENTS SHALL COME, greeting:

WHEREAS HEINRICH TRENK, of Berlin, Prussia, and JEAN BALLATSCHANO, and CONSTANTIN BALLATSCHANO, both of Bucharest, Roumania, have by their Petition humbly represented to me that they are the authors or designers of a certain invention or improvement in manufactures, that is to say, of an invention entitled, "Improved processes and compositions for the Tanning and Condensing of Hides or Skins," which is more particularly described in the amended specification which is hereunto annexed; and that they, the said Petitioners, have deposited with the Honorable the Treasurer of the said Colony of New South Wales the sum of Twenty Pounds sterling, for defraying the expense of granting these Letters of Registration, as required by the Act of Council, sixteenth Victoria, number twenty-four; and have humbly prayed that I would be pleased to grant Letters of Registration, whereby the exclusive enjoyment and advantage of the said invention or improvement might be secured to them for a period of fourteen years: And I, being willing to give encouragement to all inventions and improvements in the arts or manufactures which may be for the public good, and having received a report favourable to the prayer of the said Petition, from competent persons appointed by me to examine and consider the matters stated therein and to report thereon for my information, am pleased, with the advice of the Executive Council, and in exercise of the power and authority given to me by the said Act of Council, to grant, and do by these Letters of Registration grant unto the said Heinrich Trenk, Jean Ballatschano, and Constantin Ballatschano, their executors, administrators, and assigns, the exclusive enjoyment and advantage of the said invention or improvement, for and during the term of fourteen years from the date hereof; to have, hold, and exercise unto the said Heinrich Trenk, Jean Ballatschano, and Constantin Ballatschano, their executors, administrators, and assigns, the exclusive enjoyment and advantage thereof, for and during and unto the full end and term of fourteen years from the date of these presents next and immediately ensuing, and fully to be complete and ended: Provided always, that if the said Heinrich Trenk, Jean Ballatschano, and Constantin Ballatschano shall not, within three days after the granting of these Letters of Registration, register the same in the proper office in the Supreme Court, at Sydney, in the said Colony of New South Wales, then these Letters of Registration, and all advantages whatsoever hereby granted, shall cease and become void.

In witness whereof, I have hereunto set my sign manual, and have caused the present Letters of Registration to be sealed with the seal of the said Colony of New South Wales, at Government House, Sydney, in New South Wales, this sixth day of December, in the year of our Lord one thousand eight hundred and eighty.

[L.S.] AUGUSTUS LOFTUS.

SPECIFICATION

Improvements in Tanning.

SPECIFICATION of HEINRICH TRENK, of Berlin, Prussia, and JEAN BALLATSCHANO, and CONSTANTIN BALLATSCHANO, both of Bucharest, Roumania, for an invention entitled, "Improved processes and compositions for the Tanning and Condensing of Hides or Skins."

THIS invention has for its object the tanning of hides or skins of all kinds in the most effectual manner and in the shortest possible time, and producing an article which may be classed as the best leather, especially in respect of great firmness, and not being injured in anywise by remaining for a long time in water.

For this purpose the skins are treated with the following tanning-fluids, either in single baths or solutions, and in a certain order, or by a mixture of the same, according to the species of the animal and strength of the skin, and the purpose for which it is to be used.

For the production of the following baths or solutions, we use either a solution of chromate of alumina in wood vinegar, or chrome alum in wood vinegar, whereby different results are obtained.

The tanning-fluids are as follows, namely:—

No. 1 is a solution of chromate of alumina or chrome-alum in wood-vinegar, and contains 1,000 parts of water to about twenty or thirty parts of chromate of alumina, or chromic alum solution, and about twenty or thirty parts of wood vinegar.

No. 2 is a solution of raw tartar, to which is added a solution of a salt, such as chloride of tin, hydro-chlorate of ammonia, chloride of nickel, chloride of calcium, or the like, in small quantities.

The tartar bath has the property of condensing or rendering more close of texture the skins considerably after their tanning with the wood vinegar and chromate of alumina, or chromic alum bath, when it is applied for about twenty-four to forty-eight hours or longer to the skins, when they come out of the tanning bath or solution, No. 1 completely tanned, washed, and still wet.

The tanning with these fluid is effected, as above specified, in different ways.

If two parts of the solution No. 1, viz., the chromate of alumina, or chromic alum, in wood vinegar, are mixed with one part of the solution No. 2, the hides of cattle and horses can be perfectly and completely tanned with the bath thus produced, in from eighteen to twenty-one days.

The raw hides have to be prepared in the usual manner before being introduced into the tanning bath.

According to the different purposes for which the prepared leather has afterwards to be manufactured, various mixtures or compounds are used of both of the above specified baths or solutions Nos. 1 and 2, as follows, that is to say,—

a. We use two parts of the solution No. 1 and one part of the solution No. 2.

b. We leave the skin at least thirty-six hours in the bath No. 2, and afterwards complete the tanning in the unmixed bath No. 1.

c. We tan the hide in the solution No. 1, and then leave it as long as may be desired in the bath No. 2.

d. We employ the process termed single tanning with the bath No. 1 alone, without using solution No. 2.

It is of advantage to the leather to add a small quantity of carbolic acid to the solution.

The proportions of the tanning baths may be made stronger or weaker according to requirements, and the same quantity of tanning fluids may be used several times.

A similar effect to that produced by single baths of chromate of alumina and chromic alum in wood vinegar will be produced by many nitrates, sulphates, and hydro-chloric acid, metallic combinations with metallic oxide—that is to say, nitrate sulphate, or hydro-chloric acid solutions of metals which are neutralised, or nearly neutralised, by treatment with carbonate of calcium; most of these substances dissolved in wood vinegar have a quickly acting capacity for tanning which approaches very nearly to the baths or solutions first herein specified.

The leather may have imparted to it an increased density by the following bath or solution, which can be stronger or weaker according to requirements, viz.: a quantity of glue is boiled in water, and oxalic acid added to it; to this is added a small quantity of glycerine containing acetate of alumina in solution. A raw hide is immersed in this solution for a few hours till it is saturated; it is then wrung out superficially and tanned in one of the above-mentioned tanning baths; or leather which has already been tanned in one of the aforesaid tanning baths and washed out, is brought either wet or dry into the condensing glue-bath in order that it may be saturated, thereby the same being wrung out and tanned again in the same tanning bath. We are thus enabled to give the leather a density or closeness of texture not hitherto attainable, and leather thus treated will be proof against water without having any grease applied to it.

Experiments have shown that by the use of wood vinegar in the above described and other methods of tanning, the dressing of the leather and the quantity of the same are greatly improved.

After the tanning of the hides or skins thus treated is effected, they must be well washed, and can then be finished as desired.

What we claim is the improved compositions, consisting of either of the above specified baths or solutions, namely:—

1st—A solution of chromate of alumina in wood vinegar, or chromic alum in wood vinegar, diluted with water, substantially as set forth.

2nd—A concentrated, or nearly concentrated, solution of raw tartar with a small addition of a salt, such as chloride of tin, hydro-chlorate of ammonia, chloride of nickel, chloride of calcium, or the like, as above set forth.

3rd—The application of double salts of tin, iron, chrome nickel, manganese, or the like, with calcium in an acetic solution, as above set forth.

4th—The application of glue in combination with oxalic acid, or other acids which do not coagulate the glue, with the addition of glycerine and acetate of alumina, as above set forth.

5th—The application of wood vinegar and analogous acids for tanning purposes.

We

Improvements in Tanning.

We also claim the use or application of either of the aforesaid compositions for the purpose of our invention, as above set forth.

We also claim the mixture or combination of the above-mentioned baths or solutions, or any of them with each other in any desired proportions, for the purpose of regulating the aforesaid baths in the tanning of hides or skins in a manner adapted to the requirements of each particular kind of the same, substantially as above set forth.

In witness whereof we, the said Heinrich Trenk, Jean Ballatschano, and Constantin Ballatschano, have hereto set our hands and seals, this twenty-sixth day of June, 1880.

HEINRICH TRENK.
JEAN BALLATSCHANO.
CONSTANTIN BALLATSCHANO.

Witness—
FRANZ SCHULTZE.

This is the amended specification referred to in the annexed Letters of Registration granted to Heinrich Trenk, Jean Ballatschano, and Constantin Ballatschano, this sixth day of December, A.D. 1880.

AUGUSTUS LOFTUS.

REPORT.

Sir, Sydney, 10 September, 1880.

We do ourselves the honor to state that we are of opinion that Letters of Registration may be granted in favour of Messrs. Heinrich Trenk and Jean and Constantin Ballatschano for an "Improved process and composition for Tanning and Condensing of Hides or Skins," in accordance with the specification transmitted for our report under your blank cover communication of the 2nd instant, No. 7,183; at the same time we are desirous of drawing attention to their concluding claim as being unusual.*

We have, &c.,
GOTHER K. MANN.
CHAS. WATT.

The Principal Under Secretary.

* The agent for the applicants (Mr. Waters) having struck out the concluding claim, as thought necessary by the Board, Letters of Registration were issued accordingly.

A.D. 1880, *9th December.* No. 896.

IMPROVEMENT IN BLEACHING, REFINING, AND PURIFYING FATS AND OILS.

LETTERS OF REGISTRATION to Alexander William Winter and William Tell Coleman, for an Improvement in Bleaching, Refining, and Purifying Fats and Oils.

[Registered on the 10th day of December, 1880, in pursuance of the Act 16 Vic. No. 24.]

BY His Excellency the Right Honorable Sir Augustus William Frederick Spencer Loftus (commonly called Lord Augustus Loftus), Knight Grand Cross of the Most Honorable Order of the Bath, a Member of Her Majesty's Most Honorable Privy Council, Governor and Commander-in-Chief of the Colony of New South Wales and its Dependencies.

TO ALL TO WHOM THESE PRESENTS SHALL COME, greeting:

WHEREAS Alexander William Winter, manufacturer, and William Tell Coleman, merchant, both of the city and county of San Francisco, State of California, one of the United States of America, have by their Petition humbly represented to me that they are the authors or designers of a certain invention or improvement in manufactures, that is to say, of an invention entitled an "Improvement in Bleaching, Refining, and Purifying Fats and Oils," which is more particularly described in the specification which is hereunto annexed; and that they, the said Petitioners, have deposited with the Honorable the Treasurer of the said Colony of New South Wales the sum of Twenty Pounds sterling, for defraying the expense of granting these Letters of Registration, as required by the Act of Council, sixteenth Victoria, number twenty-four; and have humbly prayed that I would be pleased to grant Letters of Registration, whereby the exclusive enjoyment and advantage of the said invention or improvement might be secured to them for a period of fourteen years: And I, being willing to give encouragement to all inventions and improvements in the arts or manufactures which may be for the public good, and having received a report favourable to the prayer of the said Petition, from competent persons appointed by me to examine and consider the matters stated therein and to report thereon for my information, am pleased, with the advice of the Executive Council, and in exercise of the power and authority given to me by the said Act of Council, to grant, and do by these Letters of Registration grant unto the said Alexander William Winter and William Tell Coleman, their executors, administrators, and assigns, the exclusive enjoyment and advantage of the said invention or improvement, for and during the term of fourteen years from the date hereof; to have, hold, and exercise unto the said Alexander William Winter and William Tell Coleman, their executors, administrators, and assigns, the exclusive enjoyment and advantage thereof, for and during and unto the full end and term of fourteen years from the date of these presents next and immediately ensuing, and fully to be complete and ended: Provided always, that if the said Alexander William Winter and William Tell Coleman shall not, within three days after the granting of these Letters of Registration, register the same in the proper office in the Supreme Court, at Sydney, in the said Colony of New South Wales, then these Letters of Registration, and all advantages whatsoever hereby granted, shall cease and become void.

In witness whereof, I have hereunto set my sign manual, and have caused the present Letters of Registration to be sealed with the seal of the said Colony of New South Wales, at Government House, Sydney, in New South Wales, this ninth day of December, in the year of our Lord one thousand eight hundred and eighty.

[L.S.] AUGUSTUS LOFTUS.

SPECIFICATION

Improvement in Bleaching, Refining, and Purifying Fats and Oils.

SPECIFICATION of ALEXANDER WILLIAM WINTER, manufacturer, and WILLIAM TELL COLEMAN, merchant, both of the city and county of San Francisco, State of California, one of the United States of America, for an invention entitled "Improvement in Bleaching, Refining, and Purifying Fats and Oils."

OUR invention relates to the bleaching, refining and purifying of tallow, lard, oils, stearic acid, and dark oils and fats, in an economical manner, without the use of acids or any poisonous or deleterious chemicals.

Hitherto it has been customary to treat oils either by distillation or with chemicals, in order to remove the impurities and the colouring matter. These methods are tedious and expensive, and are therefore not economical for the treatment of oils and fats for various purposes and uses.

We have discovered that fuller's earth will remove the impurities from animal oils and fats, and from certain vegetable oils, and that it also has an affinity for the colouring matters of these oils and fats, so that by the treatment of them with said fuller's earth they are purified and rendered practically colourless.

Our invention, therefore, consists in mixing with such oils and fats, reduced to a liquid condition, pulverised dry fuller's earth, and then separating the earth from the oil or fat, preferably by allowing it to settle in the same vessel, or removing it to another vessel to settle.

In carrying out our invention, we take the oil or fat to be purified in any desired quantity, place it in any ordinary vessel suited for the purpose, and warm it until it is in a suitably liquid condition. The degree of temperature required will of course vary with the different kind of oil or fat, and we do not deem it therefore necessary to specify any particular degree of heat, it being simply sufficient that the material to be treated should be reduced to a suitably liquid state.

When the fat or oil is in such proper state of liquefaction, we spread over its surface and mix with it a quantity of fuller's earth, or equivalent clay, which should be finely pulverized. After this has been thoroughly agitated and mixed it is allowed to settle. The fuller's earth will then be found at the bottom, and the oil or fat left free from all impurities and from colouring matter, but in other respects unchanged, and ready for use in the making of soap or candles, or for any other purpose where pure colourless oil or fat is required or desirable.

The residuum, consisting of fuller's earth mixed with oil, after the clear portion has been drawn off, may be put into boiling water, which separates the oil or fat from the earth, and permits it to rise to the top, where it can be recovered. The refuse may then be thrown away or utilized in any desired manner.

The amount of fuller's earth which we have found to be necessary varies with the different kinds of fats and oils, but may be stated at from one to fifteen per cent. in weight of the fat or oil to be treated thereby.

Obviously no stills or other expensive machinery are needed, the only apparatus required being an ordinary vessel of suitable capacity in which to warm the oil or fat, and, if desired, one or more settling tanks, separate or connected.

This process is designed mainly for the treatment of animal oils and fats such as those hereinbefore specified; we have found, however, that the treatment, though not applicable to all vegetable oils, may be advantageously applied to the treatment of cotton-seed oil, mustard-seed oil, and cocoa-nut oil, and may also be applied effectively to other oils of like constitution. In no case, however, have we found necessary, nor do we contemplate the use, with our process, of any acid or other chemical treatment, or the mixture of any other substance.

We are aware that fuller's earth has been heretofore suggested in the English Provisional Specification, No. 3,721, of 1867, in connection with a preliminary sulphuric acid treatment for the purification of paraffine; we do not therefore claim broadly the use of fuller's earth in connection with other matters, as an element in the purification of mineral oils.

We are aware that pumice and other magnesian earths, silica, and siliceous earths, in connection with acid treatment or other processes, have been heretofore known in the treatment of oils, and we do not broadly claim such, our process being confined to an argillaceous, non-aluminous clay, such as fuller's earth.

In the treatment of fats and oils, however, we have found the simple application with fuller's earth as we use it effective for the purpose of removing impurities, and at the same time removing the colouring matter, and we confine our claim therefore to the treatment of oils and fats by means of fuller's earth taken alone, the fuller's earth having a special fitness by reason of its affinity for the colouring matter contained in them.

By means of this process we are enabled to prepare in an inexpensive manner the dark and cheap oils and fats, and to render them practically colourless and fit to be used in the manufacture of soap, candles, and other articles.

Having thus described our invention, what we claim as new and desire to secure by Letters of Registration is,—

The described process of treating animal fats and oils and certain vegetable oils, by reducing them to a liquid condition, mixing therewith pulverized fuller's earth, in substantially the proportions specified, and then separating the earth from the oil or fat, as and for the purpose set forth.

In witness whereof, we, the said Alexander William Winter and William Tell Coleman, have hereunto set our hands and seals, this thirteenth day of September, 1880.

ALEXANDER WILLIAM WINTER.
WILLIAM TELL COLEMAN.

Witnesses,—
S. H. NOURSE.
FRANK A. BROOKS.

This is the specification referred to in the annexed Letters of Registration granted to Alexander William Winter and William Tell Coleman, this ninth day of December, A.D. 1880.

AUGUSTUS LOFTUS.

REPORT.

Improvement in Bleaching, Refining, and Purifying Fats and Oils.

REPORT.

Sir, Sydney, 1 November, 1880.

The application of Messrs. Winter and Coleman for Letters of Registration, for an "Improvement in Bleaching, Refining, and Purifying Fats and Oils," having been referred to us, we have examined the specification accompanying the same, and have now the honor to report that we see no objection to the issue of Letters of Registration as prayed for.

We have, &c.,
J. SMITH.
CHAS. WATT.

The Under Secretary of Justice.

A.D. 1880, *9th December.* No. 897.

IMPROVEMENTS IN EXETER COOKING-STOVES.

LETTERS OF REGISTRATION to George Fletcher and John Smethurst Fletcher, for Improvements in Exeter Cooking-stoves.

[Registered on the 10th day of December, 1880, in pursuance of the Act 16 Vic. No. 24.]

BY His Excellency the Right Honorable Sir Augustus William Frederick Spencer Loftus (commonly called Lord Augustus Loftus), Knight Grand Cross of the Most Honorable Order of the Bath, a Member of Her Majesty's Most Honorable Privy Council, Governor and Commander-in-Chief of the Colony of New South Wales and its Dependencies.

TO ALL TO WHOM THESE PRESENTS SHALL COME, greeting:

WHEREAS George Fletcher and John Smethurst Fletcher, trading as "Fletcher & Son," of Sydney, in the Colony of New South Wales, have by their Petition humbly represented to me that they are the authors or designers of a certain invention or improvement in manufactures, that is to say, of an invention of certain "Improvements in Exeter Cooking-stoves," which is more particularly described in the specification and the sheet of drawings which are hereunto annexed; and that they, the said Petitioners, have deposited with the Honorable the Treasurer of the said Colony of New South Wales the sum of Twenty Pounds sterling, for defraying the expense of granting these Letters of Registration, as required by the Act of Council, sixteenth Victoria, number twenty-four; and have humbly prayed that I would be pleased to grant Letters of Registration, whereby the exclusive enjoyment and advantage of the said invention or improvement might be secured to them for a period of fourteen years: And I, being willing to give encouragement to all inventions and improvements in the arts or manufactures which may be for the public good, and having received a report favourable to the prayer of the said Petition, from competent persons appointed by me to examine and consider the matters stated therein and to report thereon for my information, am pleased, with the advice of the Executive Council, and in exercise of the power and authority given to me by the said Act of Council, to grant, and do by these Letters of Registration grant unto the said George Fletcher and John Smethurst Fletcher, their executors, administrators, and assigns, the exclusive enjoyment and advantage of the said invention or improvement, for and during the term of fourteen years from the date hereof; to have, hold, and exercise unto the said George Fletcher and John Smethurst Fletcher, their executors, administrators, and assigns, the exclusive enjoyment and advantage thereof, for and during and unto the full end and term of fourteen years from the date of these presents next and immediately ensuing, and fully to be complete and ended: Provided always, that if the said George Fletcher and John Smethurst Fletcher shall not, within three days after the granting of these Letters of Registration, register the same in the proper office in the Supreme Court, at Sydney, in the said Colony of New South Wales, then these Letters of Registration, and all advantages whatsoever hereby granted, shall cease and become void.

In witness whereof, I have hereunto set my sign manual, and have caused the present Letters of Registration to be sealed with the seal of the said Colony of New South Wales, at Government House, Sydney, in New South Wales, this ninth day of December, in the year of our Lord one thousand eight hundred and eighty.

[L.S.] AUGUSTUS LOFTUS.

SPECIFICATION

A.D. 1880. No. 897.

Improvements in Exeter Cooking-stoves.

SPECIFICATION of MESSRS. GEORGE FLETCHER & SON, ironmongers and ironfounders, Oxford-street, Sydney, and Edgecliff Road, Waverley, in the Colony of New South Wales, for an invention to Exeter Cooking-stoves, entitled "Improvements in Exeter Cooking-stoves."

THIS invention consists of certain improvements to Exeter cooking-stoves, namely:—

By so arranging the internal flues so as to give a larger oven or baking space in same size of stove.

Also by putting in a perforated fire-back in direct communication with back flue with sliding damper in connection with same, which is intended to regulate the draught and to prevent a tendency to smoke when first lighted, and also to be used when baking ovens are not required.

And also by giving extra facility for boiling on top of oven plate, by having extra openings and rings to take pots, kettles, &c.

We therefore claim—

1st—A larger oven in same sized stove. (See drawing annexed, which shows two 36-inch stoves, the original one, marked figure A, with oven 1 foot 2 inches in width; the improved one, marked figure B, being 1 foot 4 inches.)

2nd—An improved perforated fire-back, with sliding damper, to give a direct draught to flue, and to regulate the heating of the oven. (See section of the stove, marked C on the drawing, showing damper both open and shut.)

3rd—Extra rings and covers on top of the oven plate, to receive pans or kettles. (See drawing, figure D.)

Having thus described the nature of our invention, we would have it understood that we do not confine ourselves to any particular size of stoves, or to the material of which they may be made or manufactured from.

G. FLETCHER & SON.

October 6th, 1880.

This is the specification referred to in the annexed Letters of Registration granted to George Fletcher and John Smethurst Fletcher, this ninth day of December, A.D. 1880.

AUGUSTUS LOFTUS.

REPORT.

Sir, Sydney, 29 October, 1880.

We do ourselves the honor to state, in reply to your blank cover communication of the 21st instant, No. 8,097, transmitting Messrs. George and John Fletcher's Petition for Letters of Registration of certain "Improvements in Exeter Cooking-stoves," that we are of opinion that the prayer of the Petitioners may be granted, in accordance with their specification, drawings, and claim.

We have, &c.,

JAMES BARNET.

The Under Secretary of Justice. GOTHER K. MANN.

[Drawings—one sheet.]

—Note.—

The lines marked thus -.-.-.-.- show position of Damper when closed.

The lines marked thus -------- show position of Damper when open.

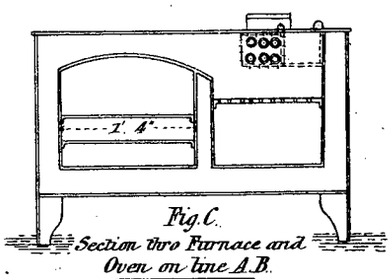

Fig. C.
Section thro Furnace and Oven on line A.B.

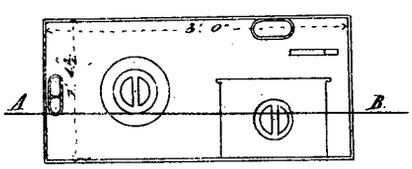

Fig. D.
Plan showing top Plate of improved Stove.

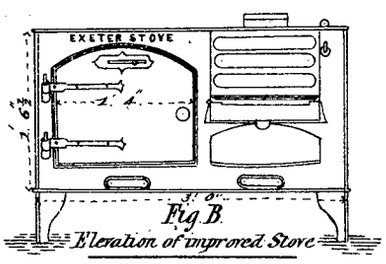

Fig. B.
Elevation of improved Stove

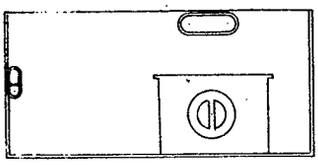

Plan showing top Plate of Old Stove.

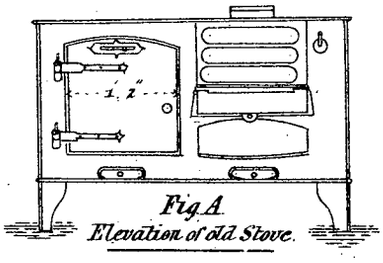

Fig. A.
Elevation of old Stove.

Scale.

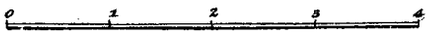

This is the Specification referred to in the annexed Letters of Registration granted to George Fletcher, and John Smithurst Fletcher, this ninth day of December A.D. 1880

Augustus Loftus.

(Sig: 357.)

PHOTO-LITHOGRAPHED AT THE GOVT. PRINTING OFFICE, SYDNEY, NEW SOUTH WALES.

A.D. 1880, 9*th December*. No. 898.

IMPROVEMENTS IN RASCHE'S PATENT DIRECT-ACTING BATTERY FOR QUARTZ-CRUSHING, &c.

LETTERS OF REGISTRATION granted to William Rasche, for Improvements in Rasche's Patent Direct-acting Battery for Quartz-crushing, &c.

[Registered on the 10th day of December, 1880, in pursuance of the Act 16 Vic. No. 24.]

BY His Excellency the Right Honorable Sir Augustus William Frederick Spencer Loftus (commonly called Lord Augustus Loftus), Knight Grand Cross of the Most Honorable Order of the Bath, a Member of Her Majesty's Most Honorable Privy Council, Governor and Commander-in-Chief of the Colony of New South Wales and its Dependencies.

TO ALL TO WHOM THESE PRESENTS SHALL COME, greeting:

WHEREAS William Rasche, of Melbourne, Victoria, civil engineer, hath by his Petition humbly represented to me that he is the author or designer of a certain invention or improvement in manufactures, that is to say, of an invention of "Improvements in Rasche's Patent Direct-acting Battery for Quartz-crushing, &c.," which is more particularly described in the specification and the sheet of drawings which are hereunto annexed; and that he, the said Petitioner, hath deposited with the Honorable the Treasurer of the said Colony of New South Wales the sum of Twenty Pounds sterling, for defraying the expense of granting these Letters of Registration, as required by the Act of Council, sixteenth Victoria, number twenty-four; and hath humbly prayed that I would be pleased to grant Letters of Registration, whereby the exclusive enjoyment and advantage of the said invention or improvement might be secured to him for a period of fourteen years: And I, being willing to give encouragement to all inventions and improvements in the arts or manufactures which may be for the public good, and having received a report favourable to the prayer of the said Petition, from competent persons appointed by me to examine and consider the matters stated therein and to report thereon for my information, am pleased, with the advice of the Executive Council, and in exercise of the power and authority given to me by the said Act of Council, to grant, and do by these Letters of Registration grant unto the said William Rasche, his executors, administrators, and assigns, the exclusive enjoyment and advantage of the said invention or improvement, for and during the term of fourteen years from the date hereof; to have, hold, and exercise unto the said William Rasche, his executors, administrators, and assigns, the exclusive enjoyment and advantage thereof, for and during and unto the full end and term of fourteen years from the date of these presents next and immediately ensuing, and fully to be complete and ended: Provided always, that if the said William Rasche shall not, within three days after the granting of these Letters of Registration, register the same in the proper office in the Supreme Court, at Sydney, in the said Colony of New South Wales, then these Letters of Registration, and all advantages whatsoever hereby granted, shall cease and become void.

In witness whereof, I have hereunto set my sign manual, and have caused the present Letters of Registration to be sealed with the seal of the said Colony of New South Wales, at Government House, Sydney, in New South Wales, this ninth day of December, in the year of our Lord one thousand eight hundred and eighty.

[L.S.] AUGUSTUS LOFTUS.

Improvements in Rasche's Patent Direct-acting Battery for Quartz-crushing, &c.

SPECIFICATION.

TO ALL TO WHOM THESE PRESENTS SHALL COME: I, WILLIAM RASCHE, of Melbourne, in the county of Bourke, engineer, send greeting :

WHEREAS I am desirous of obtaining Royal Letters Patent for securing unto me Her Majesty's special license that I, my executors, administrators, and assigns, and such others as I or they should at any time agree with and no others, should and lawfully might, from time to time, and at all times during the term of fourteen years (to be computed from the day on which this instrument shall be left at the office of the Registrar General), make, use, exercise, and vend within the Colony of New South Wales and its Dependencies, an invention for "Improvements in Rasche's Patent Direct-acting Batteries for Quartz-Crushing, &c."; and in order to obtain the said Letters Patent I must, by an instrument in writing under my hand and seal, particularly describe and ascertain the nature of the said invention and in what manner the same is to be performed, and must also enter into the covenant hereinafter contained: Now know ye that the nature of the said invention, and the manner in which the same is to be performed, is particularly described and ascertained in and by the following statement (that is to say) :—

1.—CONSTRUCTION.

Figure 1 shows a front elevation partly in section; figure 2, a side elevation partly in section; figure 3 shows another modification of the invention in section, the complementary parts being the same as shown in figure 1 and figure 2.

A A shows the stamper-box of ordinary construction or as shown; the stamps are also of the ordinary construction. B shows one of the stamps in dotted lines. C C shows the sole-plate cast on or bolted to top of stamper-box A A. The said sole-plate C C has sockets D D cast on or otherwise secured to it, to serve as guides to the stamp shanks E E. In the said sole-plate C C a column F is secured, and serves as a guide to the steam cylinder G; the said sole-plate C C has also a central socket, H, into which the said cylinder G or its stuffing-box I and gland K dip in the descent of said cylinder G. The said socket H serves as an air chamber or air cushion to terminate the down-stroke of said cylinder G gently. The said cylinder G has a double eye, L, secured to it, which carries by means of a pin, M, the lever N. The said lever N carries straps O O, of iron or other material, which have sockets P P secured to them, and serve to lift the stamps on the ascent of the cylinder G, the said sockets P P catching against disks Q Q keyed to the said stamper-shanks E E. The keying of said discs Q Q is effected by means of one, two, or more vertical keys, R R, whose heads are inserted into holes or recesses made in the stamp-shanks E E, and have the usual taper or not. S S are sockets through which the said stamper-shanks E E pass free, and serve to limit the down-stroke. The said cylinder G carries a belt or strap or eye or hook, T, to which a chain or strap or link is attached, which latter is connected to the lever V; latter carries a weight in case a chain or strap is used, or link if no weight is used. The said lever V works in a spindle X, and latter in a bearing, Y; the said lever V serves by its arm Z on being set in motion by the said cylinder G on steam or other fluid being admitted into latter to work the crooked valve rod *a*, for the purpose of admitting or exhausting the motive fluid by means of a valve, *b*, attached thereto. The said valve may be as shown, or an ordinary slide valve with the usual arrangements of ports and passages, pipes, &c. In drawing, figure 2, the valve is shown in the position for admitting the steam or, &c., by means of the steam pipe *e* and the annular space *d d*, and the steam connections *e f g*, into said cylinder G. On the arrival of the latter to near its full up-stroke, the said lever V having by means of its connection, as stated before, with the said cylinder G, brought the port *h* into the position of said annular space *d d* and the port *l* opposite the port *m*, the steam in said cylinder G exhausts into the atmosphere or otherwise in the usual manner through the exhaust pipe. To prevent any wasting of steam, the orifices in the valve casing *n* are fitted with packing rings weighted with springs. In the case a weight is attached to said lever *v*, a trestle is provided for the weight to fall on; *g* is a spring against which the said lever arm Z abuts, or otherwise; *x* is a guide to the said valve rod *a*. The movements of the valve may also be performed by means of tappet motion or straps and pulleys. In the modification shown in figure 3, *s s* shows a section of a column which is cast on or otherwise secured to said sole-plate C or box A, and in which the said cylinder G reciprocates in a similar manner; and by the same means as stated before, the steam or, &c., acting on the piston or disc *t* on the bottom of said cylinder G; the said cylinder G may be a solid plunger, or a piston and rod may be substituted or be hollow. If it be preferred to have double guides to the stamp-shanks, two uprights, 1, and a cross-piece, 2, are attached or fixed to the stamper-box, the cross-piece having two holes to serve as guides, and is secured to the uprights in the ordinary way. In this case the discs Q Q are fixed or keyed above the position of the lever N, and the straps O O, with their sockets P P, also sockets S S, are not applied, and the link or strap *u* is attached to the lever pin M or other motion parts (the same letters refer to the same parts in all the drawings). The air or steam cushion under said cylinder G or piston *t* is formed by an additional length of said column *s s*. The uprights and cross-piece, &c., are shown in figure No. 10 and figure No. 20.

From the foregoing, it will be evident that the stampers are lifted direct by means of steam or other fluids, and that the engine is single-acting, consequently that the stamps fall and strike by their own gravity. The number of stamps may be two, three, four, &c. The inventor prefers two to each engine. G G are guards.

Having now described the nature of my said invention, and in what manner the said is to be performed, I declare that what I claim in respect thereof is as follows:—

1—The use and adaptation of the construction of the Direct-acting Battery for the crushing of quartz or other minerals or materials as set forth as a whole.

2—The use and adaptation of the mode of fixing discs to stamper rods or shanks as set forth.

3—The use and adaptation of the valve gear as set forth.

4—The use and adaptation of compensating lever, for the purpose of equalizing the weight to the lifting cylinder, &c., as set forth.

And

Improvements in Rasche's Patent Direct-acting Battery for Quartz-crushing, &c.

And I do hereby, for myself and my heirs, executors, and administrators, covenant with Her Majesty, Her Heirs, and successors, that I believe the said invention to be a new invention as to the public use and exercise thereof; and that I do not know or believe that any other person than myself is the true and first inventor of the said invention, and that I will not deposit these presents at the office of the Supreme Court with any such knowledge or belief as last aforesaid.

In witness whereof, I, the said William Rasche, have hereunto set my hand and seal, this eighteenth day of September, one thousand eight hundred and seventy-seven.

WIILLAM RASCHE.

This is the specification referred to in the annexed Letters of Registration granted to William Rasche, this ninth day of December, A.D. 1880.

AUGUSTUS LOFTUS.

REPORT.

Sir, Sydney, 28 October, 1880.

We have examined the application of Mr. William Rasche for Letters of Registration for "Improvements in Rasche's Patent Direct-acting Battery for Quartz-crushing, &c.," and have now the honor to report that we see no objection to the issue of Letters of Registration in accordance with the drawings and specification submitted.

We have, &c.,
J. SMITH.
GOTHER K. MANN.

The Under Secretary of Justice.

[Drawings—one sheet.]

IMPROVEMENTS IN W. RASCHE'S PATENT DIRECT ACTING BATTERY FOR QUARTZ CRUSHING &c

Front Elevation partly in Section. Fig. 3.

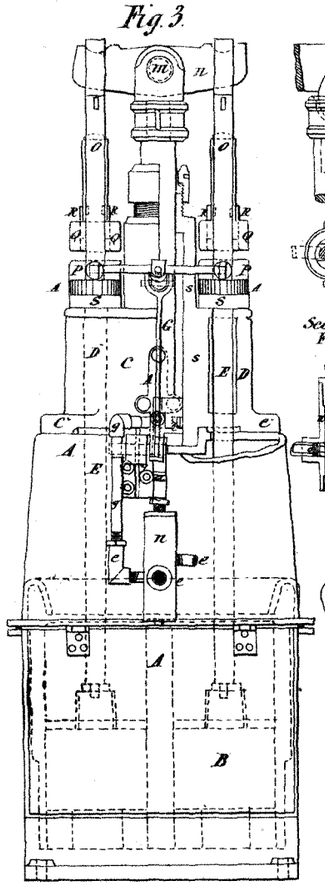

Side Elevation. Fig. 2.

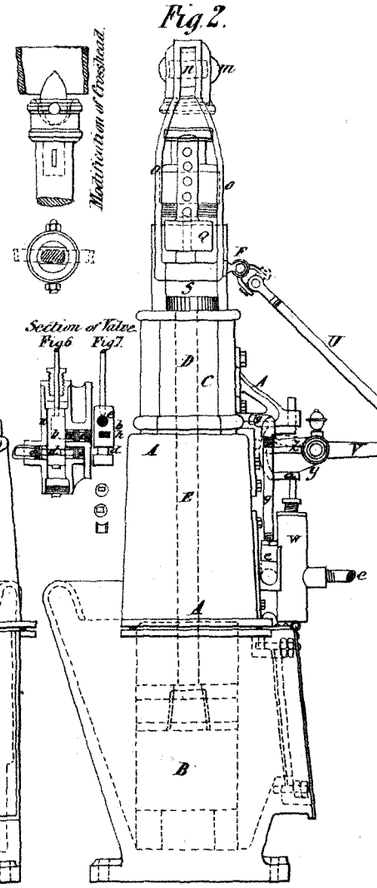

Front Elevation partly in Section. Fig. 1.

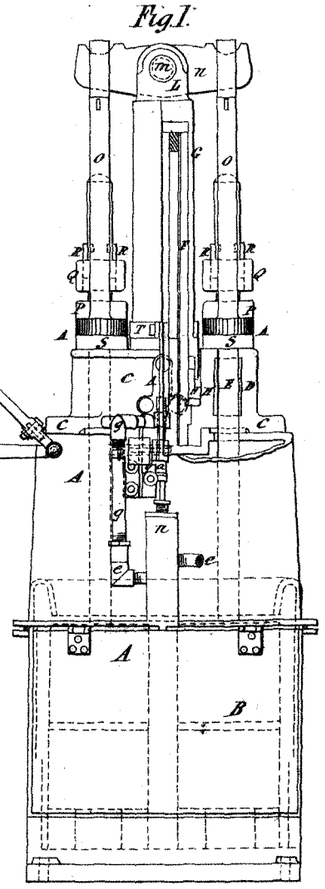

Section of A.A

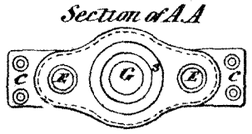

Fig. 4.

Section of A.A.

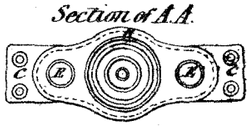

Fig. 5.

This is the Sheet of Drawings referred to in the annexed Letters of Registration granted to William Rasche, this ninth day of December, A.D. 1880.

Augustus Loftus.

W. RASCHE'S PATENT DIRECT ACTING STEAM BATTERIES FOR QUARTZ CRUSHING, &C.

With latest Improvements

Scale.



No. 10.

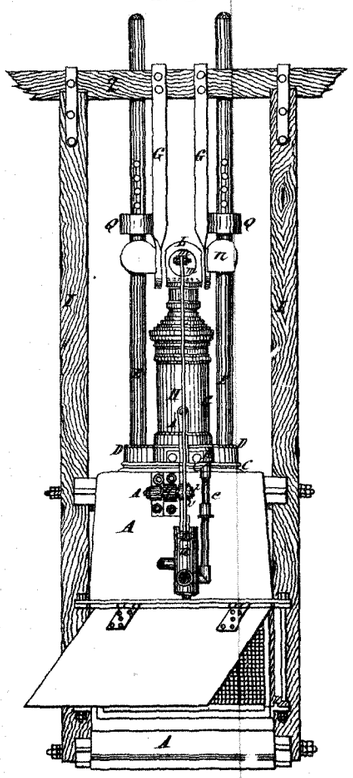

No. 20.

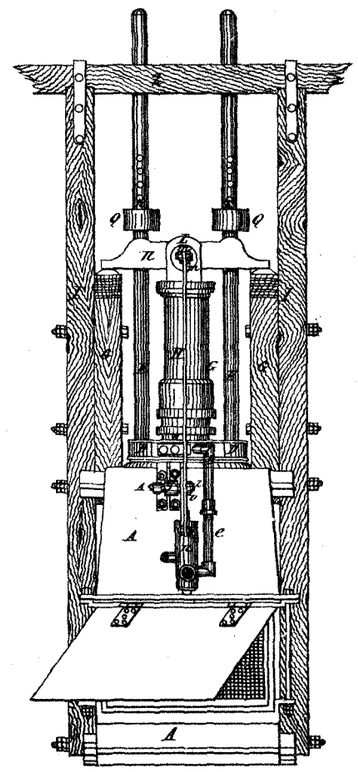

PHOTO-LITHOGRAPHED AT THE GOVT. PRINTING OFFICE, SYDNEY, NEW SOUTH WALES.

A.D. 1880, 17*th December*. No. 899.

IMPROVED CORN HUSKER AND SHELLER.

LETTERS OF REGISTRATION to Alexander Morrison Fell, for an Improved Corn Husker and Sheller.

[Registered on the 20th day of December, 1880, in pursuance of the Act 16 Vic. No. 24.]

BY His Excellency the Right Honorable Sir Augustus William Frederick Spencer Loftus (commonly called Lord Augustus Loftus), Knight Grand Cross of the Most Honorable Order of the Bath, a Member of Her Majesty's Most Honorable Privy Council, Governor and Commander-in-Chief of the Colony of New South Wales and its Dependencies.

TO ALL TO WHOM THESE PRESENTS SHALL COME, greeting:

WHEREAS Alexander Morrison Fell, of Joadja Creek, in the Colony of New South Wales, engineer, hath by his Petition humbly represented to me that he is the author or designer of a certain invention or improvement in manufactures, that is to say, of an invention of an "Improved Corn Husker and Sheller," which is more particularly described in the specification and the sheet of drawings which are hereunto annexed; and that he, the said Petitioner, hath deposited with the Honorable the Treasurer of the said Colony of New South Wales the sum of Twenty pounds sterling, for defraying the expense of granting these Letters of Registration, as required by the Act of Council, sixteenth Victoria, number twenty-four; and hath humbly prayed that I would be pleased to grant Letters of Registration, whereby the exclusive enjoyment and advantage of the said invention or improvement might be secured to him for a period of fourteen years: And I, being willing to give encouragement to all inventions and improvements in the arts or manufactures which may be for the public good, and having received a report favourable to the prayer of the said Petition, from competent persons appointed by me to examine and consider the matters stated therein and to report thereon for my information, am pleased, with the advice of the Executive Council, and in exercise of the power and authority given to me by the said Act of Council, to grant, and do by these Letters of Registration grant unto the said Alexander Morrison Fell, his executors, administrators, and assigns, the exclusive enjoyment and advantage of the said invention or improvement, for and during the term of fourteen years from the date hereof; to have, hold, and exercise unto the said Alexander Morrison Fell, his executors, administrators, and assigns, the exclusive enjoyment and advantage thereof, for and during and unto the full end and term of fourteen years from the date of these presents next and immediately ensuing, and fully to be complete and ended: Provided always, that if the said Alexander Morrison Fell shall not, within three days after the granting of these Letters of Registration, register the same in the proper office in the Supreme Court, at Sydney, in the said Colony of New South Wales, then these Letters of Registration, and all advantages whatsoever hereby granted, shall cease and become void.

In witness whereof, I have hereunto set my sign manual, and have caused the present Letters of Registration to be sealed with the seal of the said Colony of New South Wales, at Government House, Sydney, in New South Wales, this seventeenth day of December, in the year of our Lord one thousand eight hundred and eighty.

[L.S.] AUGUSTUS LOFTUS.

A.D. 1880. No. 899.

Improved Corn Husker and Sheller.

SPECIFICATION of invention by ALEXANDER MORRISON FELL, of Joadja Creek, parish of Joadja, county of Camden, district of Berrima, Colony of New South Wales, for an "Improved Corn Husker and Sheller."

THIS invention has for its objects simplicity and its thorough action. It consists of a vertical concave disc or discs, studded with conical teeth, only the outer circles being wedge and beak shaped, revolving on an axle or axles driven by hand or other power; but the principle part of the invention is in the form of disc or discs and teeth; also feed box or boxes with tension or pressure blocks, passing across face of disc or discs.

The form of the box or boxes is larger at the upper end, where the cobs are put in, gradually tapering towards the lower end, and of an arch curve; in the length of the box or boxes are regulating tension or pressure blocks worked by springs, so as to regulate for the different size cobs; all which are shown in the tracings accompanying this.

For the purpose of cleaning or separating the corn from the husk and chaff, a fan and sieve or sieves can be added.

Having thus particularized my said invention, I have to state that I do not restrict myself to the precise details and drawings herein described and attached, but what I believe to be novel and original, and claim as the invention I want secured to me,—

First—The form of feed box or boxes with tension or pressure blocks, and placing of same across disc or discs.

Second—The concavity of disc or discs form, and placing of teeth on same to get the desired effect of cleaning the cob and keeping themselves free from the husk and fibre.

In witness whereof I, the said Alexander Morrison Fell, have hereunto set my hand, this seventh day of September, 1880.

ALEX. M. FELL.

This is the specification referred to in the annexed Letters of Registration granted to Alexander Morrison Fell, this seventeenth day of December, A.D. 1880.

AUGUSTUS LOFTUS.

REPORT.

Sir,

Sydney, 5 November, 1880.

We do ourselves the honor to report, in reply to your B.C. communication of the 24th September, 80–7,705, with reference to A. M. Fell's Petition for Letters of Registration for an invention of an "Improved Corn Husker and Sheller," that we are of opinion that Letters of Registration may be granted to the Petitioner, in terms of his specification, drawings, &c.

We have, &c.,

ROBERT GEO. MASSIE.
E. O. MORIARTY.

The Under Secretary of Justice.

[Drawings—one sheet.]

FELL'S.

Patent

Combined Corn Husker and Sheller.

Improved.

Front Elevation.

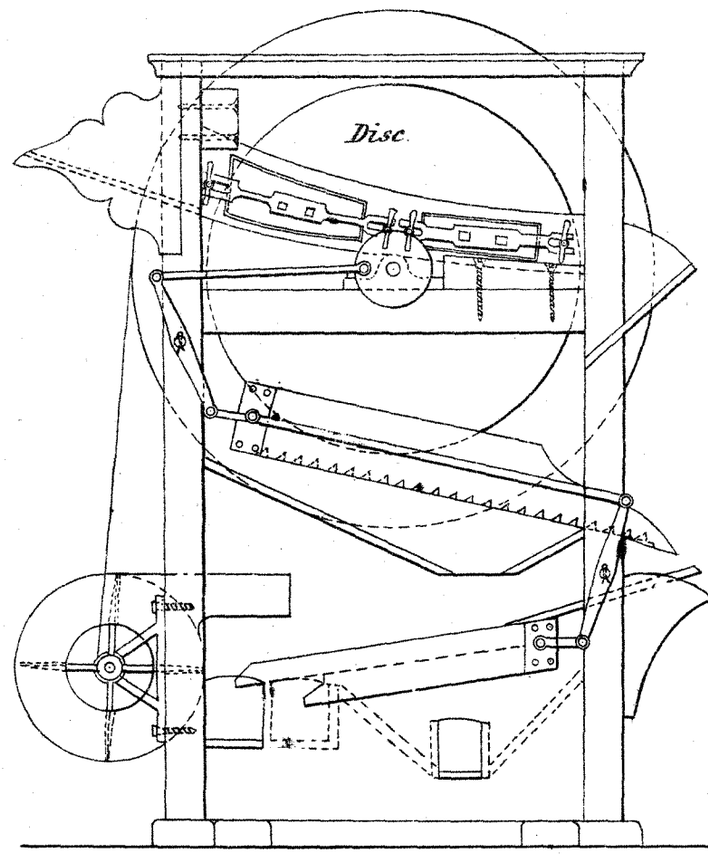

Scale.

0 ½ 1 ½ 2 feet.

End Elevation.

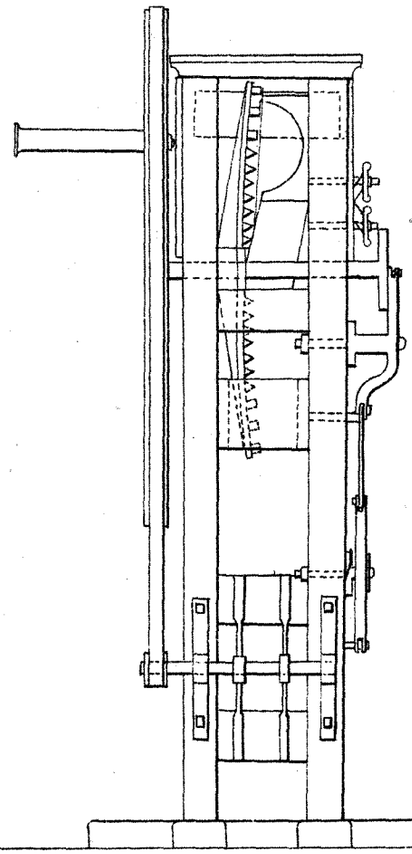

Plan.

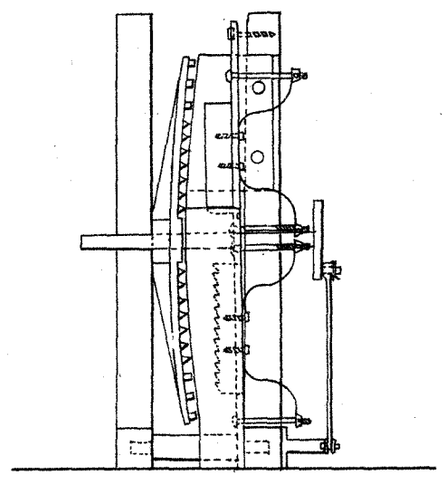

This is the Sheet of Drawings referred to in the annexed Letters of Registration granted to Alexander Morrison Fell, this Seventeenth day of December, A.D. 1880.

Augustus Loftus.

(Sig. 357)

PHOTO-LITHOGRAPHED AT THE GOVT. PRINTING OFFICE, SYDNEY, NEW SOUTH WALES.

A.D. 1880, 29*th December.* No. 900.

IMPROVEMENTS IN MEANS FOR STOPPING BOTTLES, &c.

LETTERS OF REGISTRATION to Dan Rylands, for Improvements in means for Stopping Bottles or other hollow articles.

[Registered on the 30th day of December, 1880, in pursuance of the Act 16 Vic. No. 24.]

BY HIS EXCELLENCY THE RIGHT HONORABLE SIR AUGUSTUS WILLIAM FREDERICK SPENCER LOFTUS (commonly called LORD AUGUSTUS LOFTUS), Knight Grand Cross of the Most Honorable Order of the Bath, a Member of Her Majesty's Most Honorable Privy Council, Governor and Commander-in-Chief of the Colony of New South Wales and its Dependencies.

TO ALL TO WHOM THESE PRESENTS SHALL COME, greeting:

WHEREAS DAN RYLANDS, of Ardsley, near Barnsley, in the County of York, in England, hath by his Petition humbly represented to me that he is the author or designer of a certain invention or improvement in manufactures, that is to say, of an invention entitled "Improvements in means for Stopping Bottles or other hollow articles," which is more particularly described in the specification and the sheet of drawings which are hereunto annexed; and that he, the said Petitioner, hath deposited with the Honorable the Treasurer of the said Colony of New South Wales the sum of Twenty Pounds sterling, for defraying the expense of granting these Letters of Registration, as required by the Act of Council, sixteenth Victoria, number twenty-four; and hath humbly prayed that I would be pleased to grant Letters of Registration, whereby the exclusive enjoyment and advantage of the said invention or improvement might be secured to him for a period of fourteen years: And I, being willing to give encouragement to all inventions and improvements in the arts or manufactures which may be for the public good, and having received a report favourable to the prayer of the said Petition, from competent persons appointed by me to examine and consider the matters stated therein and to report thereon for my information, am pleased, with the advice of the Executive Council, and in exercise of the power and authority given to me by the said Act of Council, to grant, and do by these Letters of Registration grant unto the said Dan Rylands, his executors, administrators, and assigns, the exclusive enjoyment and advantage of the said invention or improvement, for and during the term of fourteen years from the date hereof; to have, hold, and exercise unto the said Dan Rylands, his executors, administrators, and assigns, the exclusive enjoyment and advantage thereof, for and during and unto the full end and term of fourteen years from the date of these presents next and immediately ensuing, and fully to be complete and ended: Provided always, that if the said Dan Rylands shall not, within three days after the granting of these Letters of Registration, register the same in the proper office in the Supreme Court, at Sydney, in the said Colony of New South Wales, then these Letters of Registration, and all advantages whatsoever hereby granted, shall cease and become void.

In witness whereof, I have hereunto set my sign manual, and have caused the present Letters of Registration to be sealed with the seal of the said Colony of New South Wales, at Government House, Sydney, in New South Wales, this twenty-ninth day of December, in the year of our Lord one thousand eight hundred and eighty.

[L.S.] AUGUSTUS LOFTUS.

Improvements in means for Stopping Bottles, &c.

SPECIFICATION of DAN RYLANDS, of Ardsley, near Barnsley, in the County of York, England, for an invention entitled "Improvements in means for Stopping Bottles or other hollow articles."

Figure 1 is sectional elevation, and figure 2 is end view of improved bottle-neck, showing projections a^1 a^1 formed on outside thereof, as near to the mouth or ring a as suitable, said projections being somewhat wider than the said mouth, if so preferred.

Figure 3 is plan of said bottle-mouth a, showing a slight circular ledge or recess at top. A second ledge may be used or not, as preferred.

Figure 4 is elevation, and figure 5 plan of improved stopper, made of glass or other suitable substance, showing a semi-circular annular groove c c about the centre thereof, the top part c^1 of said stopper being somewhat less in circumference than bottom part c^2. On underside of said bottom part is a circular portion or glass centre, c^3, which may either bevel somewhat, being narrower at parts c^4 c^4 than at parts c^5 c^5, or be quite parallel, or straight, or grooved.

Figure 6 is a plan and figure 7 elevation of the washer c^6 (made of india-rubber, cork, or other suitable substance) which I prefer to use with a stopper of size shown at figure 4, though I do not bind myself as to size or shape of washer. Figure 8 is elevation of stopper with india-rubber washer attached. Figure 9 is end elevation, figure 10 side elevation, and figure 11 plan of circular clip made of any kind of wire or metal, or other suitable substance, having two arms d^1 d^1 with holes d^2 d^2 as shown. The circumference of said circular clip d^1 is such that top part c^1 of stopper (figure 4) will just pass through it, and thus said clip d can be brought opposite groove c c in said stopper, said clip being suitable in shape so as to fit therein. Where preferred, clip d may be flat when groove c c is not semicircular.

Figure 12 shows position of clip d when passed over stopper.

Figure 13 shows the shape which said clip assumes on being compressed into groove c c of said stopper, though, as will be well understood, the portions d^3 d^3 may be compressed out at any other part of said circular clip d, as for instance at the arms d^1 d^1; also, if preferred, there may be only one portion compressed out instead of two. Figure 14 is elevation, and figure 15 plan of circular clip e (made of similar material to clip d), which said clip e is just large enough to pass over bottle ring or mouth a, and has two pins e^1 e^1 cast or formed on portions e^2 e^2, which said portions may be of same length as the projections a^1 a^1 on bottle, and are made somewhat deeper than remainder of ring e. Figure 14a shows portions e^2 e^2 of circular clip e slightly recessed, and so as to form an inclined plane.

Figure 16 shows shape which said clip e is pressed into after being put on bottle neck. Figure 17 shows improved bottle-neck with improved stopper attached, and in air-tight position. Figure 18 shows stopper released, and being passed clear of bottle mouth. Figure 19 shows pins e^1 e^1, cast or formed on inside of arms d^1 d^1 of clip d, instead of on bottom clip e. Figure 19a shows small india-rubber washer for fixing on pins e^1 e^1, when required. Figure 20 shows holes d^2 d^2 in portions e^3 e^3 of bottom clip e, which (if the pins e^1 e^1 are required to be riveted) may be made (in shape shown) instead of on arms d^1 d^1 of top clip. The said projections e^3 e^3 may also be made rather deeper and thicker than the other portion of clip e.

Figures 21 to 27 are various views showing a modification of my said invention, according to which I form projections a^1 a^1 on stopper (as shown in figures 23 and 24) instead of on bottle, and the portions f f and f^1 f^1 of said stopper are somewhat larger in circumference than portion f^2, the clip e before described (having arms d^1 d^1 thereon) being attached to stopper and clip d, also before described (having pins e^1 e^1 thereon) being attached to bottle. Figures 28 and 29 show stopper having projections a^1 a^1 in form of a screw, and also having lug f^4 on top of stopper, and which said lug may be used on top of the other stoppers, if so preferred. Figures 30 to 33 show my invention applied by means of the slides or shoes d^5 d^5 being formed at end of arms d^1 d^1, which said slides fasten under and against projections a^1 a^1 on bottle-neck.

Figures 34, 35, and 36 show indents a^5 a^5 a^5 formed at outside of mouth of bottle or jar, and figures 37 and 38 show corresponding indents c c c formed in top of stopper. These indents may be either round, square, or any other preferred shape, and may be in any required number, either more or less than shown in the drawings.

The stoppers also may be made without indents, if preferred, or they may have recesses or slot holes formed on top for straight portions d d of clips d^1 d^1 to rest in, and there may be indents at the end of these recesses, if it is desired to use both indents and recesses, thus keeping top of clip level with top of stopper, as will be well understood, and may on underside be ground perfectly level, and top of bottle-neck ground perfectly level, thus dispensing with india-rubber or cork washer if desired. Figures 39 and 40 show shape of clips d^1 d^1 I prefer to use for stoppers with indents, and figures 42 and 43 show shape of clips for said stoppers without indents, or with recesses or straight slot holes at top only. The shape of portions e^1 e^1 and of portions a^1 a^1 will vary with shape of indents in bottle and stopper, as will be well understood.

Figure 41 shows bottle or jar with stopper secured in air-tight position.

Figure 44 shows stopper top of hexagonal shape instead of round. It will be well understood that this bottle or jar may have the circular ledge or recess, or double circular ledge or recess, as described (figure 3).

In performing or carrying out my said invention, I first form the necks (figures 1 and 2) of bottles or other hollow articles (preferentially during the process of blowing or making) with two projections a^1 a^1 on bottle neck, as shown, but which said projections may be in any other suitable position. The circular clip d (figures 9, 10, and 11), having two arms d^1 d^1 as shown, is attached to circular clip e (figures 14 and 15) by the pins e^1 e^1 of said clip e being passed through holes d^2 d^2 in arms d^1 d^1 of said top clip, and by then bending on or riveting said pins so that said arms d^1 d^1 are securely attached to and will turn on them. Or (as shown in figure 19) the pins e^1 e^1 may be on the inside of arms d^1 d^1 and fastened through holes d^2 d^2 in clip e (figure 20). I then take the stopper (figures 4 and 5) having india-rubber ring (figures 6 and 7) attached on the portion c^3 of said stopper as shown (figure 8) and pass top portion c^1 of said stopper through circular portion of clip d, which being only just large enough in circumference to pass over said portion c^1 rests on shoulder of the wider part c^2 of said stopper. I then compress said circular clip d into groove c c of said stopper, thus bulging said clip out, as shown at d^3 d^3 (figures 12 and 13) thus altering its internal circumference and thereby causing it to fit securely into groove c c, either so that it may be turned round therein or be rigid, though I prefer to compress clip d so that it can be turned round in said groove c c. I then take

take the clip *e* (figures 14, 14*a*, and 15) having clip *d* and stopper attached, as explained, and pass it over mouth *a* of bottle (figures 1 and 2), and when at portion a^3 of bottle-neck I compress said clip *e* into shape shown (figure 16) thus forming said clip at portions $e^2 e^2$ thereof into the required shape for passing over projections $a^1 a^1$ of said bottle-neck, which allows stopper to be pressed firmly into bottle-mouth, thus bringing the india-rubber washer c^6 tightly into circular ledge or recess a^3, the arms $d^1 d^1$ being so proportioned that when stopper is thus pressed firmly to bottle the other portion of clip *e* can be twisted under said projections $a^1 a^1$, thus securely holding stopper in air-tight position as shown in figure 17. To open the bottle it is only necessary to press on stopper, then twist the attached clips *d* and *e* until portions $e^2 e^2$ of said clip *e* are brought parallel with projections $a^1 a^1$ on said bottle-neck, when stopper can be lifted, bringing said portions over said projections and thus allowing said stopper to be passed clear of said bottle-mouth, as shown (figure 18). The altered shape of clip *e* prevents this clip being passed over mouth *a* of bottle, and therefore protection is secured against stopper being lost or stolen from bottle. I would here remark that the projections on bottle may be of any suitable number and shape, and in any suitable position, and the clip *e* would thus of course be altered in shape so as to adapt it to such modification. Referring to figures 21 to 27, by either of the two methods I have hereinbefore described, I secure circular clip *e* (figure 15), but in this case having arms $d^1 d^1$ thereon to ring *d* (figure 11) which has either pins $e^1 e^1$ or holes $d^2 d^2$ formed thereon. I then pass portion *ff* of stopper (figures 23 and 24) through said circular clip *e*, said clip being made just large enough for this purpose, and when this clip is opposite f^2 of said stopper I compress it into shape shown in figure 16, so that it will pass over projections $a^1 a^1$ of said stopper. I then pass clip *d* over portion *a* of bottle-mouth (figure 25) and compress it into groove *c c* thereof, thus forming said clip *d* into shape shown in figure 13, which, as previously explained, secures said clip into said groove. I then press stopper firmly into the bottle-mouth, and, thus by means of an india-rubber ring, as before explained, form an air-tight joint, and by twisting the attached clips *e* and *d* the said clip *e* is brought on top of projections $a^1 a^1$ of said stopper, as shown in figure 26, thus firmly and securely holding said stopper in air-tight position. To open the bottle it is only necessary to press on stopper, so that said clips *e* and *d* can be twisted, bringing portions $e^2 e^2$ of said clip *e* parallel with projections $a^1 a^1$ on said stopper, when stopper may be lifted, and swing clear of bottle-neck, as shown at figure 27. I would here remark that though the form of bottle-mouth shown at figure 25 is specially suited for this latter arrangement (it being understood that said bottle-mouth may have the recess or ledge as shown at a^3 figure 1, if desired), the arrangement for working this modification of my patent can be well applied to bottles made after the ordinary manner, the arms $d^1 d^1$ in such case being made sufficiently long to allow of clip *d* being compressed so as to take a bearing against underside of portion of bottle-mouth marked $c^2 c^2$ in figure 25. The india-rubber washer used with this stopper may be varied in shape, according to requirements, or the arms $d^1 d^1$ being cast or formed on clip *e* in manner as before described, may have the pins $e^1 e^1$ formed thereon, as shown in figure 19, such pins $e^1 e^1$ being compressed into circular external indents $a^5 a^5$ of a bottle-mouth made (as shown in figures 21 and 22, thus, in this case, dispensing with clip *d*) though I wish it to be understood that I do not claim the external indents $a^5 a^5$ as any portion of my invention, but for preventing such pins $e^1 e^1$ breaking or starring the bottle-mouth, I pass over and attach to each of said pins a small india-rubber washer, as shown in figure 19*a* before compressing said pins into said indents. Referring to figure 28, the projection a^1 on stopper may be made in the form of a screw, as shown, in which case the circular clip *d* would work thereon by having a suitably corresponding bevelled ledge on inside of said clip *d*, and said clip *d* would, after being passed over portion *ff* of said stopper, be compressed into shape shown in figure 13, thus tightening said clip on screw portion a^1, so that said screw portion a^1 would work in said bevelled edge circular clip *d* by the ordinary screw motion, as will be well understood. The arms $d^1 d^1$ of said clip may be bent inwards nearly at the bottom, so as to clip securely under an ordinary bottle-neck, thus giving good leverage for the screw to make air-tight joint by its compression on the india-rubber washer. In this case the rivets $d^2 d^2$ would be dispensed with. The lugs $f^4 f^4$ as shown (figures 28 and 29), may be either of the shape shown or any suitable shape, and may be applied to this or any other modification of my invention, where they may assist to more readily close or open bottles. Referring to figures 30, 31, 32, and 33,—I form on bottom of arms $d^1 d^1$ of clip *d*, two shoes or slides $d^5 d^5$, as shown in figures 30 and 31; I then secure stopper shown in figure 8 to said circular clip *d* (figure 30) in manner as before described, figure 31 showing shape. I compress said circular clip *d* into after putting it on said stopper. On pressing said stopper tightly into bottle-mouth *a*, as before described, and twisting said arms $d^1 d^1$ the slides $d^5 d^5$ are brought under and against projections $a^1 a^1$ of bottle-neck, thus securing said stopper in air-tight position, as shown in figures 32 and 33. If it is desired to make stopper extra secure, the end portions $d^8 d^8$ of slides $d^5 d^5$ may be bent or turned back against end of projections $a^1 a^1$ of bottle mouth. To open a bottle or jar thus closed, it is only necessary to straighten portions $d^8 d^8$ of slides $d^5 d^5$ if they have been bent back, and whilst pressing on said stopper twist the clip *d* until said slides or shoes $d^5 d^5$ are clear of said projections $a^1 a^1$ when the stopper can be removed from bottle. I would here remark that I consider this and the next described arrangements specially adapted for hollow articles or jars used for preserved meats and fruits, and when such jars are of a size so requiring I would have more than two projections on mouth, and a correspondingly increased number of arms with shoes or slides on clips *d*. Referring to figures 34 to 43, I form outside of neck or mouth of bottle or jar, in any suitable position, any required number of indents $a^5 a^5 a^5$ of any desired shape. I form corresponding indents *c c c* on top of stopper (figures 37 and 38); I then take clips $d^1 d^1 d^1$ (figures 39 and 40) and first press the projections $a^1 a^1 a^1$ of said clips into indents *c c c* in top of stopper; I then press stopper into air-tight position on bottle, and force portions $e^1 e^1 e^1$ of said clips $d^1 d^1 d^1$ into indents $a^5 a^5 a^5$ in neck of bottle or jar, thus securing said stopper in air-tight position, as shown in figure 41. To open bottle or jar it is only necessary to force a pointed instrument, such as a sardine-knife, between bottle-neck and lower half of each clip d^1, which forces portions e^1 of clips out of indents a^5 in bottle-neck, thereby setting said clips and stopper at liberty. Where it is preferred to dispense with indents in stoppers, or to use recesses or slot-holes on top of stopper without indents, the portions *d* of clips d^1 may be straight, as shown at figures 42 and 43. The portions *d* of clips d^1 may also be inclined at any other suitable angle, and the indents *c c c* on top of stopper inclined to suit such angle. Where it is preferred, an annular groove (formed on outside of bottle-mouth as shown in figure 25) will answer instead of the indents $a^5 a^5 a^5$. Such groove can be easily formed with a pair of dies such as are used for forming what is known in the trade as a split-ring. Or by recessing a ledge in top of bottle mould a ring

with

with a square or flat underledge may be blown on the bottle-mouth, and the clips will fasten securely against such underledge. It will be well understood that projections will be formed on bottles or on stoppers by cutting indents in moulds, and that indents in bottles or in stoppers will be formed by raised projections in moulds. Any of the stoppers may, where so preferred, be of shape shown figure 44, or any other preferred shape, at top portion thereof.

Having now particularly described and ascertained the nature of my said invention and in what manner the same is to be performed, I have to state that I am aware that metal shoes or slides on ends of arms attached to stopper and projections on bottles and on stoppers have been heretofore used, and arrangements of indents and arms have likewise been adopted or used; therefore I do not claim the use of any of the said mechanical parts by themselves, or otherwise than when used in combination, and as part of my specially devised arrangements hereinbefore described and shown in the accompanying drawings. I do not restrict myself to the precise details herein described or delineated, but what I believe to be novel and original, and therefore claim as my invention are—the improved means or arrangements for stopping bottles or other hollow articles, substantially as hereinbefore described, and set forth and shown respectively in series in the annexed drawings, that is to say, in figures 1 to 18, and in figures 19 to 29, and in figures 30 to 33, and in figures 34 to 48, or any mere modification thereof.

In witness whereof, I, the said Dan Rylands, have hereunto set my hand and seal, this sixth day of August, 1880.

DAN RYLANDS.

Witness—
HENRY JESSE BALL,
Stanfoot, Barnsley.

This is the specification referred to in the annexed Letters of Registration granted to Dan Rylands, this twenty-ninth day of December, A.D. 1880.

AUGUSTUS LOFTUS.

REPORT.

Sir, Sydney, 18 November, 1880.

The application of Mr. Dan Rylands, for Letters of Registration for an invention of "Improvements in means for Stopping Bottles or other hollow articles" having been referred to us, we have examined the specification, &c., accompanying the same, and have now the honor to report that we see no objection to the issue of Letters of Registration as prayed for.

We have, &c.,
JAMES BARNET.
THOS. RICHARDS.

The Under Secretary of Justice.

[Drawings—one sheet.]

Sydney: Thomas Richards, Government Printer.—1881.

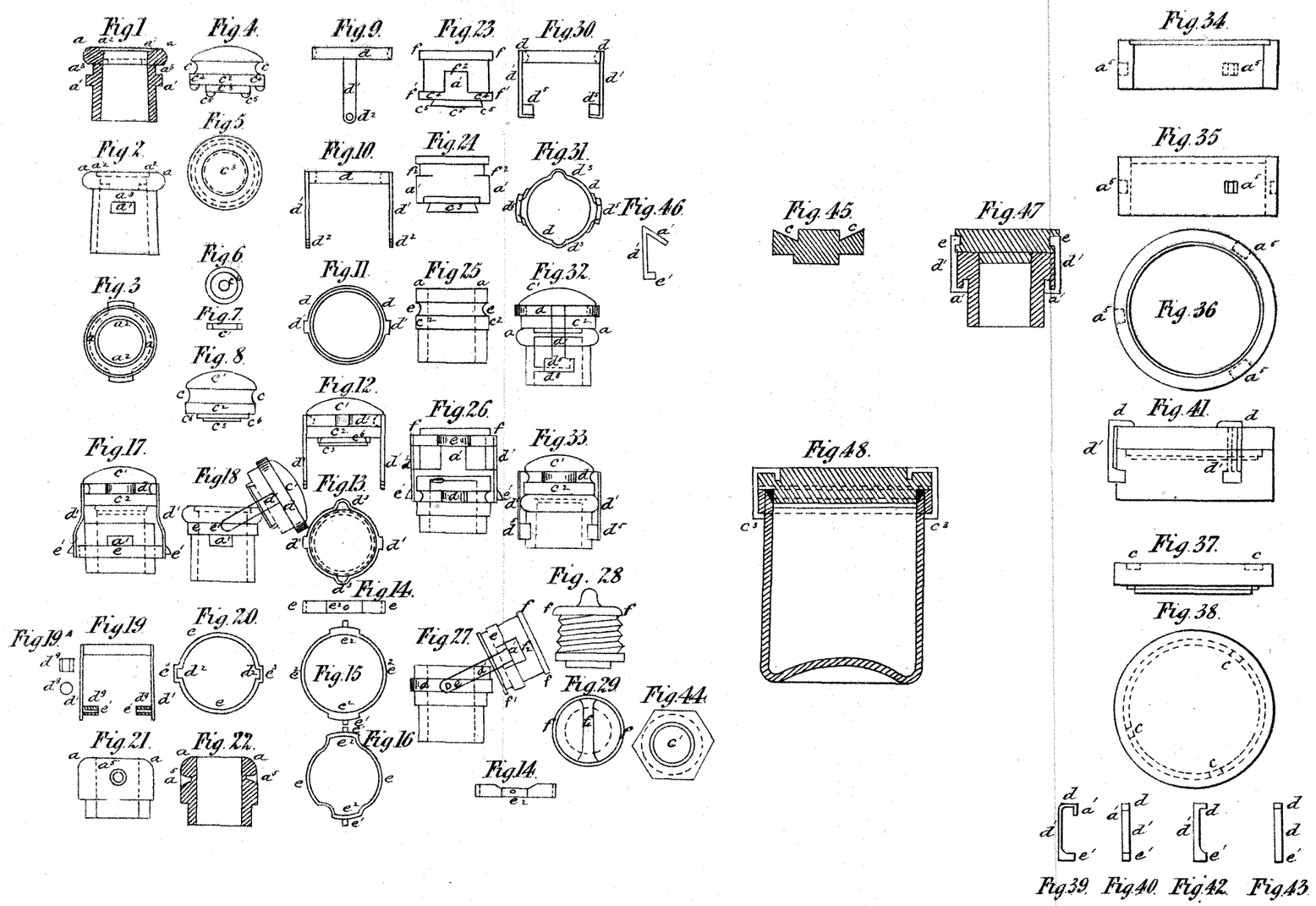

This is the Sheet of Drawings referred to in the annexed Letters of Registration granted to Dan Rylands, this twentyninth day of December, A.D. 1880.

Augustus Loftus.

(Sig. 357)

PHOTO-LITHOGRAPHED AT THE GOVT. PRINTING OFFICE, SYDNEY, NEW SOUTH WALES.

1882.

NEW SOUTH WALES.

EXPLORATION OF THE CAVES AND RIVERS OF NEW SOUTH WALES.

(MINUTES, REPORTS, CORRESPONDENCE, ACCOUNTS.)

Presented to Parliament by Command.

The Curator and Secretary, Australian Museum, to The Executive Commissioner, Paris Exhibition.

Sir, The Australian Museum, Sydney, 2 November, 1866.

I have the honor to acknowledge the receipt of your communication of October 2nd and 12th, and to inform you, by direction of the Trustees, that leave of absence for three weeks has been granted to me for the purpose of examining the Breccia Caves of Wellington, and as I shall probably start next week I should feel obliged if you would cause a cheque to the amount of £50 to be drawn in my favour to cover the necessary travelling expenses.

I have, &c.,
GERARD KREFFT,
Curator and Secretary.

Professor Owen to The Colonial Secretary.

Sir, London British Museum, 23 February, 1867.

The enlarged and liberal views of your Administration embolden me to suggest that a careful and systematic exploration of the limestone caves of Wellington Valley, discovered by the Colonial Surveyor in or about 1832, would be a work worthy of your encouragement.

The fossil remains which were then obtained from the caves revealed the important and suggestive fact that the marsupial type of structure prevailed in the ancient and extinct, as in the existing quadrupeds of Australia. Besides the great accession of such evidences as would accrue to the Museum at Sydney from such exploration, most instructive evidence may be expected, bearing upon the antiquity and origin of the aboriginal races of Australia.

Such contribution to human knowledge, initiated and supported by New South Wales, would be gratefully appreciated by all who, in this hemisphere, are devoted to the progress of science, and would redound to the honor of your present Constitutional Government.

I would willingly devote time to the determination and description of such specimens or duplicates as, so acquired, might be transmitted to me for that purpose, or be liberally sent for deposition in the British Museum; and these descriptions would be punctually transmitted to the Museum at Sydney, as materials of its catalogue, or to such address as you might please to indicate in reference to a systematic description of the Wellington Valley Bone Caves.

I feel confident, from personal conference on the subject with the late Sir Thomas Mitchell—who confided to me the fossils he was able to bring over for description in his work, published in 1838—that the results of the proposed exploration, in the hands of one qualified, would amply repay a grant, say of £200 or £300, if placed on the Estimates and sanctioned by the Assembly.

I have, &c.,
RICHARD OWEN, F.R.S.

The Colonial Secretary to Professor Owen.

Sir, Colonial Secretary's Office, Sydney, New South Wales, 16 June, 1869.

With reference to your letter of the 23rd February, 1867, recommending that the Government of this Colony should cause a careful and systematic exploration to be made of the limestone caves of Wellington Valley, I have now the honor to inform you that the sum of £200 has been voted by the local Parliament for carrying out your suggestion, and that the Curator of the Australian Museum has been charged with the duty of making the necessary exploration.

I have, &c.,
JOHN ROBERTSON.

The

The Principal Under Secretary to The Trustees, Australian Museum.

Gentlemen, Colonial Secretary's Office, Sydney, 16 June, 1869.

In transmitting to you the accompanying copy of a letter from Professor Owen, recommending that the Government of this Colony should cause a careful and systematic exploration to be made of the limestone caves of Wellington Valley, I am directed to inform you that the sum of £200 has been voted by Parliament for that purpose, and that the Colonial Secretary approves of the duty being entrusted to the Curator of the Australian Museum, and to request that you will be good enough to instruct Mr. Krefft accordingly.

2. In carrying out the suggestion of Professor Owen, due care should of course be taken that the interests of the institution under your charge, in respect to obtaining fossil remains, &c., are not lost sight of.

I have, &c.,
HENRY HALLORAN.

Extract from minutes of a meeting of the Trustees of the Australian Museum, held on 1st July, 1869.

A letter was read from the Honorable the Colonial Secretary, transmitting copy of a letter from Professor Owen, recommending that the Government of this Colony, should cause a careful and systematic exploration to be made of the limestone caves of Wellington Valley, and informing the Board that the sum of £200 had been voted by Parliament for that purpose. The Hon. the Colonial Secretary also informed the Board that he approves of the duty being entrusted to the Curator of the Australian Museum, who should be instructed accordingly. The Hon. the Colonial Secretary further remarked, that in carrying out the suggestion of Professor Owen, due care should of course be taken that the interests of the Museum in respect to obtaining fossil remains are not lost sight of.

Moved by the Revd. W. B. Clarke, seconded by Dr. George Bennett, and carried,—"That the following gentlemen be appointed a committee to consider the Hon. the Colonial Secretary's letter:—The Revd. W. B. Clarke, Dr. Cox, The Surveyor-General, Dr. Bennett, The Hon. Dr. Macfarlane, Dr. Thomson."

The Curator and Secretary, Australian Museum, to The Principal Under-Secretary.

Sir, Australian Museum, Sydney, 4 July, 1869.

I have the honor to acknowledge the receipt of your letter of the 16th June, transmitting copy of a letter from Professor Owen, recommending the exploration of the Wellington Caves, and informing the Board that the sum of £200 has been voted by Parliament for that purpose, and that the Colonial Secretary approves of the duty being entrusted to the Curator of the Australian Museum.

In reply, I am directed by the Trustees to inform you that the Trustees will give the necessary instructions to Mr. Krefft to carry out a systematic exploration of the Wellington Valley Caves.

I have, &c.,
GERARD KREFFT,
Curator and Secretary.

At a meeting of the Committee, on 16th August, 1869, it was resolved, "That an application be made to the Colonial Secretary for permission to include, with Mr. Krefft, Mr. Clarke and Dr. Thomson, if either, or both, can make it convenient to join the expedition." Moved by the Surveyor-General; seconded by Dr. M'Farlane.

The Curator and Secretary, Australian Museum, to The Colonial Secretary.

Sir, Australian Museum, Sydney, 16 August, 1869.

I have the honor to apply on behalf of the Board of Trustees for permission to include the Rev. W. B. Clarke and Dr. Thomson (if either or both can make it convenient) to join the expedition to the Wellington Caves, for which as you inform the Board a sum of £200 has been voted by Parliament. I beg to refer you to your letter dated June 16th, and to my reply, by direction of the Board, of July 4th, 1869.

I have, &c.,
GERARD KREFFT,
Curator and Secretary.

The Principal Under-Secretary to The Curator and Secretary, Australian Museum.

Sir, Sydney, 25 August, 1869.

Having laid before the Colonial Secretary your letter of the 16th instant, applying on behalf of the Trustees of the Australian Museum for permission to include the Rev. W. B. Clarke, Dr. Thomson, or both, if they can make it convenient, in the expedition to explore the caves of Wellington Valley, I am directed to state that Mr. Robertson approves of one or both of the abovenamed gentleman accompanying you; but it must be understood that no more money must be expended than that voted by the Legislature for the above purpose.

I have, &c.,
HENRY HALLORAN.

Extract

EXTRACT from Minutes of a Meeting of the Trustees of the Museum, held on 2nd September, 1869.

THE Committee appointed by the Board to report on the offer of £200, applied by the Government at the instance of Professor Owen, for the exploration of the Wellington Caves, met on one occasion and recommended:—

1. That Mr. Krefft should procure supplies, conveyance, and other requisites at Wellington.
2. That permission should be requested from the Colonial Secretary to allow the Rev. W. B. Clarke, M.A., and Dr. A. M. Thomson, to accompany Mr. Krefft.

Having obtained permission, the Committee met and decided to recommend to the Board that these two gentlemen should start with Mr. Krefft as early as possible, and that Henry Barnes should also accompany them as assistant.

The Curator was directed to communicate with the Honorable the Colonial Secretary, and to inform him that the instructions given in his letter of the 16th of June—"that in carrying out the suggestions of Professor Owen due care should be taken that the interests of the Institution under the charge of the Trustees in respect to obtaining fossil remains are not lost sight of"—will be strictly attended to, and that all specimens collected will be deposited in the Australian Museum.

The Curator was directed to start on Tuesday next, or as soon as he could obtain the necessary funds.

Mr. J. Macfarlane to The Chairman of the Board of Trustees, Australian Museum.

Sir, 2 September, 1869.

The Committee appointed by the Board to report on the offer of the sum of £200, applied by the Government at the instance of Professor Owen, for the exploration of the Wellington Caves, met on one occasion and recommended—

1st. That Mr. Krefft should procure supplies, conveyance, and other requisites at Wellington.
2nd. That permission be requested from the Colonial Secretary to allow the Rev. W. B. Clarke and Dr. A. M. Thomson to accompany Mr. Krefft.

Having obtained permission, the Committee met and decided to recommend to the Board that these two gentlemen should start with Mr. Krefft as early as possible, and that Henry Barnes should also accompany them as assistant, on the understanding that all specimens collected should be deposited in the Museum.

J. MACFARLANE,
Chairman.

Professor Owen to The Colonial Secretary.

Sir, British Museum, London, 18 August, 1869.

I have the honor to acknowledge the reception of your letter of the 16th June, 1869, informing me that the sum of £200 has been voted by the Local Parliament for carrying out the exploration of the limestone caves of Wellington Valley, and to express my deep sense of the honor done to me by the favorable consideration which the Parliament has been pleased to give to my letter on that subject of the 23rd February, 1867. The successful fulfilment of its aim may be confidently expected, from the fact that the experienced Curator of the Australian Museum has been charged with the duty of making the necessary explorations.

I beg to repeat my pledge to give immediate attention to the study and description of whatever specimens may be transmitted to me, either temporarily, or with a view to being returned named, to the Australian Museum, or as duplicates to be deposited in the British Museum. I may be permitted to add, that I regard this vote as of more importance to the advancement of science than the greatest success in its immediate application, in its relation, namely, as a precedent and example of a recognition by a Parliament of the value of abstract truth irrespective of direct application to material profit.

I have, &c.,
RICHARD OWEN.

The Curator and Secretary, Australian Museum, to The Principal Under-Secretary.

Sir, Australian Museum, Sydney, 3 September, 1869.

I have the honor to acknowledge the receipt of your letter of the 25th August, informing the Board of Trustees that the Honorable the Colonial Secretary has granted permission to include the Rev. W. B. Clarke and Dr. Thomson in the expedition to explore the caves at Wellington Valley, with the understanding that no more money must be expended than that voted by the Legislature for the above purpose.

In reply, I am directed to inform you that the sub-committee appointed to consider the exploration of the caves have brought up their report, which has been adopted by the Trustees, and Mr. Krefft and Dr. A. M. Thomson, accompanied by one of the skilled workmen of the Museum, will start as soon as the necessary funds are available.

The instructions given in a former letter (June 16th), "That in carrying out the suggestion of Professor Owen due care should be taken that the interests of the institution under the charge of the Trustees, in respect to obtaining fossil remains, &c., are not lost sight of," will be carried out, and *all* specimens collected are to be deposited in the Australian Museum.

* * * * * * * * *

I have, &c.,
GERARD KREFFT,
Curator and Secretary.

The

The Principal Under Secretary to The Curator and Secretary, Australian Museum.

Sir, Colonial Secretary's Office, 7 September, 1869.

In acknowledging the receipt of your letter of the 3rd instant, stating that the Wellington Caves exploration party, consisting of yourself, Dr. Thomson, and one of the skilled workmen of the Australian Museum, will start as soon as the necessary funds are available, I am directed by the Colonial Secretary to point out that the Trustees do not say how they wish the money to be advanced, and to request a report upon the subject.

I have, &c.,
HENRY HALLORAN.

The Curator and Secretary, Australian Museum, to The Colonial Secretary.

Sir, The Australian Museum, Sydney, 7 September, 1869.

I have the honor to acknowledge the receipt of your letter of this day, in which you point out, by direction of the Honorable the Colonial Secretary, that the Trustees do not say how they wish the money for the Wellington Caves exploring party to be advanced, and requesting a report upon the subject.

In reply, I have the honor to inform you, on behalf of the Board of Trustees, that it is usual to pay all money due to the Board into their account at the Bank of New South Wales.

I have, &c.,
GERARD KREFFT,
Curator and Secretary.

The Principal Under Secretary to The Curator, Australian Museum.

Sir, Colonial Secretary's Office, Sydney, 9 September, 1869.

In reply to your further letter of the 7th instant, I am directed by the Colonial Secretary to state that the Colonial Treasurer has been invited to cause the sum of £200 (two hundred pounds), voted on the Supplementary Estimates for 1868, for the exploration of limestone caves, Wellington Valley, to be paid to the credit of the Trustees of the Australian Museum, in the Bank of New South Wales.

I have, &c.,
HENRY HALLORAN.

At a meeting of the Committee, held on 7th October, 1869, it was resolved,—"That the sum of £15 be set aside for the purpose of photographing and lithographing the most interesting of the specimens recently brought by the Curator from Wellington."

The Curator and Secretary, Australian Museum, to The Colonial Secretary.

Sir, Australian Museum, Sydney, 4 November, 1869.

I have the honor to transmit to you, by direction of the Trustees of the Australian Museum, a copy of the Curator's report of the examination of the caves at Wellington Valley, accompanied by a series of photographs, forty-four in number, representing the most interesting of the remains discovered.

I am also directed to inform you that a trustworthy person is still at work at the caves, and that some very valuable specimens have been received during the last few weeks.

A full report, illustrated by lithographic plates, will be prepared and submitted to you as soon as all the specimens have been thoroughly examined.

I have, &c.,
GERARD KREFFT,
Curator and Secretary.

[*Enclosure.*]

Report of the Curator of the Australian Museum regarding the examination of the caves of Wellington Valley.

To the Trustees of the Australian Museum,—

Gentlemen,

In accordance with your direction, I proceeded, accompanied by Dr. A. M. Thomson and Henry Barnes, to Wellington, to examine the limestone caves of Wellington Valley.

There are four caves in all; but one only contains loose bone breccia, and this cave was thoroughly examined.

Since my last visit to this cave about three years ago, the ground had been much disturbed by stalactite hunters and amateur geologists, but some good ground was at last discovered and a considerable quantity of fossil remains secured.

A shaft was sunk in one of the inner chambers of this cave to a depth of 16 feet without reaching the bottom, and fossil teeth and bones were observed to that depth in small quantities; the attempt to reach the solid rock failed however, owing to the difficulty of disposing of the earth so removed.

We tried, but in vain, to take the breccia in bags to the surface; the approach to the shaft was too difficult, and the result of several days labour was only a few cart-loads of stuff.

After this effort we began sifting the deposit, and thus obtained many valuable specimens.

We continued our labours during a period of fifteen days, banking up the earth as we proceeded, and excavating nearly all the shallower fissures to the bottom rock.

The loose deposit in the cavern is however a great drawback, and to give some idea of the quantity, I may state that Dr. A. M. Thomson, after careful measurements, estimated the quantity at 250 tons.

We obtained many valuable and rare specimens, some quite new to science, consisting of the remains of mammals, birds, and reptiles, which I have the honor to lay before you.

The largest bones and teeth (those of the now extinct *diprotodons* and *nototheriums*) are of a size equal to those of a full grown elephant, others do not exceed those of a mouse.

After completing the examination of the remaining caves in the valley, we put down a shaft in front of the Breccia Cavern and after a few feet reached the limestone rock.

We then proceeded *via* Molong to Boree. At Molong some fossil shells and corals were obtained; similar specimens we collected at Boree, but we did not meet with the peculiar red bone earth which was observed in the Breccia Cave of Wellington.

I hope to be able to give a more detailed report of the remains discovered, illustrated by photographs or lithographs; and Dr. Thomson has promised to add a full account of the geological character of the country examined by him. I beg to state, that a trustworthy person has been left in charge of the Breccia Cave at Wellington, who will continue to forward the specimens which he obtains from time to time.

I have, &c.,
GERARD KREFFT,
Curator and Secretary.

Australian Museum,
Sydney, 7 October, 1869.

List of Photographs of Australian Fossils, for transmission to Professor Owen, F.R.S.:—

PLATE I.

1. Left mandible of a *Nototherium*.
2. Sacral vertebræ of a *Diprotodon*.
3. Skull from above, *Zygomaturus*.
4. Skull showing palate, *Zygomaturus*.
5. (*a*) Right mandible, *Sarcophilus*.
   (*b*) Molar tooth and portion of jaw of a new species of *Diprotodon*.
   (c) Left mandible, *Sarcophilus*.
6. Seven fragments of the lower jaw of several species of Kangaroos, *Macropus* and *Halmaturus*.
7. (*a*) Right mandible of a new species of Wombat, *Phascoloneys*.
   (*b*) Right mandible of an extinct species of Kangaroo (*M. atlas*.)
8. Fragments of jaws of various species of Kangaroos.

PLATE II.

1. Left side of skull, a gigantic Kangaroo, *Halmaturus gigas*.
2. Six fragments of the arm-bone (ulna) of various species of Wombats; the small figures are those of Wombats of the ordinary size.
3. Two phalanges of the foot and six nail-bones (terminal phalanges) of new Australian animals.
4. Three phalanges of the foot, the last of a recent *Macropus major*, and a fractured left upper premolar tooth of a *Thylacoleo*.
5. Six phalanges of the foot of various species of Kangaroos.
   Large nail-bone of a new animal, seen from below.
   Side view of another nail-bone, indicating the existence in Australia of a Sloth allied to the American genus *Mylodon*.
6. Phalanges of various species of Kangaroos, Wombats, Thylacines, &c.
7. Five phalanges of the hind foot of various species of Kangaroos, and three (first) metatarsal bones indicating a new animal belonging to the Phalanger family, in all probability the thumb-bones of a *Thylacoleo* or a *Plectodon*.
8. Seven terminal phalanges of the hand belonging to various Kangaroos, and eight undetermined metatarsal bones; also the 5th metatarsal bone of a man (recent.)

PLATE III.

1. Right lower jaw, *Diprotodon* (outer view).
2. Right lower jaw, *Diprotodon* (inner view).
3. Femur of gigantic Moa-like bird from the Leichhardt Downs, Queensland.
4. Left side of the skull of a gigantic Kangaroo.
5. Left lower jaw of *Halmaturus Thomsonii*.
6. Fractured left lower jaw of a *Diprotodon*.
7. Fractured arm-bones (ulna) of Wombat and Tasmanian Tiger (*Thylacinus*).
8. Left lower jaw of a *Nototherium*.

PLATE IV.

1. Large lower incisor of a *Diprotodon*.
2. Right mandible of a gigantic Wombat.
3. Right lower jaw of an extinct Kangaroo, *Halmaturus Scottii*.
4. Palate of a new species of *Zygomaturus*, *Z. Macleayi*.
5. (*a*) Palate of a large Kangaroo.
   (*b*, c) Two views of upper rami of extinct Kangaroos, showing the permanent premolar tooth in its aveolus.
   (*d*) Premolar of an undescribed species of Wombat.
6. Right lower jaw of a gigantic Wombat.
7. (*a*, *b*) Two fractured lower incisors of *Diprotodon*.
   (*c*) First upper incisor, *Zygomaturus*.
8. Sacral vertebræ of a gigantic marsupial, *Diprotodon* or *Zygomaturus*.

PLATE V.

1. Skull of a *Zygomaturus trilobus* with the zygomatic arch removed to show the infra-orbital foramen (bristle passed through).
2. Mandibles of small marsupials.
3. Fractured carapace of a Tortoise allied to *Chelodina longicollis*.
4. (*a*) Right upper ramus of a gigantic Kangaroo.
   (*b*) Upper incisor of a species of *Diprotodon*.
   (*c*) Upper incisor of a gigantic Kangaroo.
5. Left mandible of a *Nototherium*.
6. Fragments of skull of a *Thylacoleo*.
7. (*a*) Fragments of an arm-bone (ulna) of a Wombat.
   (*b*) Two nail-bones of a Kangaroo.
   (*c*) Fractured left mandible, *Sarcophilus*.
   (*d*) Two molar teeth and right lower jaw of a dog, *Canis dingo*.
8. Fractured rami of gigantic Kangaroo.

PLATE VI.

1. Fractured rami and teeth of ten species of Wombats, and of a Wombat-like Kangaroo. *Halmaturus Thomsonii*.
2. Rami of small marsupials of the genus *Dasyurus*, *Belideus*, *Perameles*, and *Peragalea*.
3. Marsupial bones (Wombats and Kangaroos), four fractured collar-bones of Wombats; articulating condyle, fractured scapula and portion of the zygoma of a Wombat. Portions of the sternum, fractured incisor, and tarsal bone of a Wombat.
4. Nineteen fractured rami of a Kangaroo-rat of the genus *Bettongia*, and upper incisor and six lower ones of the same species of Kangaroo-rat.
5. Palates of two species of Wombat.
6. Lower jaw and teeth of gigantic Wombats.
7. Lower incisors of Kangaroos.
8. Terminal phalanx of some unknown animal and teeth of various gigantic marsupials.

PLATE VII.

1. Femur of a Moa-like bird from Leichhardt Downs, Queensland.
2. Femur of a Moa-like bird from Leichhardt Downs, Queensland.
3. (*a*) Fractured skull of a *Sarcophilus*.
   (*b*, *c*) Upper molar, *Diprotodon* (new species).
   (*d*) Right mandible of Thomson's Kangaroo, *Halmaturus Thomsonii*.
4. (*a*) Premolar and molar of the upper jaw, *Diprotodon*.
   (*b*) Scalpiform incisor tooth of a new animal allied to *Diprotodon*.
   (*c*) Side view of a terminal phalanx or nail-bone (with the protecting hood removed) indicating some unknown animal allied to the extinct *Edentata* of South America.
5. Fractured skulls of *Thylacinus* and *Sarcophilus*.
6. (*a*) Fractured rami (3), *Sarcophilus*.
   (*b*) Molar teeth of a gigantic Kangaroo.
7. Lower jaw (left) of *Sarcophilus*.
   (*a*, *b*, *c*) Three fractured mandibles of a large Thylacine or Tasmanian Tiger.
8. (*a*) Lower jaw of Creeds Notothere, *Nototherium Creedii*.
   (*b*) Left mandible of a *Thylacinus* (recent).

PLATE

PLATE VIII.

1. Various bones and teeth of a species of *Thylacine*.
2. Five bones of the leg (tibia 3, femur 2) of a Kangaroo-rat of the genus *Bettongia*.
3. (*a*) Proximal portion of a large rib.
   (*b*) Upper molar of a gigantic Kangaroo.
   (*c*) Third tarsal bone of a large Kangaroo.
4. (*a*) Portion of lower jaw of a species of Kangaroo.
   (*b*) Left lower jaw of a Kangaroo, *Halmaturus Thomsonii*.
5. Four fractured mandibles of Kangaroos.
6. Left lower jaw of a gigantic Wombat, *Phascolomys gigas*.
7. Teeth of various marsupials, *Diprotodon*, *Nototherium*, *Zygomaturus*, *Macropus*, *Halmaturus*, *Phascolomys*, and *Dasyurus*.
8. (*a*) Fractured fibula of a Wombat.
   (*b*, *c*) Distal fragments of tarsal bone, *Macropus*.
   (*d*, *e*) Third tarsal bones (perfect), *Macropus*.

PLATE IX.

1. Fractured lower jaw of a new species of *Nototherium*.
2. Right ramus, upper jaw, of a new species of *Zygomaturus*.
3. Lower jaw of *Nototherium*.
4. Palate of *Zygomaturus Macleayi*.
5. Fractured left lower jaw, *Nototherium*.
6. Fractured lower jaw, *Diprotodon*.
7. Right lower jaw, *Diprotodon*.
8. Right lower jaw, *Diprotodon*.

PLATE X.

1. Palate of *Zogomaturus Macleayi*.
2. Left lower jaw, *Nototherium*.
3. Fractured ulna of a new animal.
4. (*a*) Upper molar, *Halmaturus Scottii*.
   (*b*) First tarsal bone, *Thylacoleo*.
   (*c*) Last molar (lower jaw) of a new genus of the Kangaroo tribe (reversed).
   (*d*, *e*) Much worn upper incisors (1st) of *Thylacoleo*.
   (*f*) Canine *Thylacinus*.
5. Upper incisors of various Kangaroos.
6. Remains of Wombats, *Phascolomys*.
   (*a*) Lower incisor, *Phascolomys*.
   (*b*) Fractured mandible, *Thascolomys*.
   (*c*, *d*) Molar teeth, *Phascolomys*.
   (*e*) Premolar of a new species of Wombat, *Phascolomys*.
   (*f*) Fractured right upper incisor of a gigantic Wombat, *Phascolomys gigas*.
   (*g*) Fractured left upper incisor, *Diprotodon*.
   (*h*) Portion of skull and upper incisor, *Phascolomys*.
7. (*a*) Upper molar, *Diprotodon*.
   (*b*) Upper molar, *Diprotodon* (new species).
   (*c*) Palate of a Wombat, *Phascolomys*.
   (*d*) Left mandible of a Kangaroo, *Macropus ocydromus*.
8. Three fractured mandibles of gigantic Kangaroos.

PLATE XI.

1. Fractured lower jaw of a *Diprotodon*.
2. Right (fractured) mandible, *Nototherium*.
3. Right (fractured) mandible, *Nototherium* (front view).
4. Ulna of a gigantic Wombat (*Phascolomys gigas*), and above it the ulna of a recent species.
5. Molar teeth of two species of *Diprotodon*.
6. (*a*, *b*, *c*) Molars of *Diprotodon*.
   (*d*) Molar, *Nototherium*.
7. (*a*) Left mandible, *Sarcophilus*.
   (*b*) Molar teeth, *Diprotodon*.
8. Shaft of the humerus or arm-bone of two gigantic animals, with figure of the same bone of a recent *Phalanger*.

PLATE XII.

1. (*a*) Fractured mandible and premolar tooth, *Thylacoleo*.
   (*b*) Much worn premolar, showing that this animal could not have been a carnivore or flesh-eater; the surface is flat and not adapted for cutting (*Thylacoleo carnifex*).
2. Six incisor teeth, *Thylacoleo*. These feeble teeth, with their compressed fangs or roots and but partly enamelled inner surface, are the teeth of a gigantic *Phalanger* closely allied to the genus *Belideus*.
3. (*a*, *b*, *c*, *d*, *e*) Incisor teeth (3rd upper), *Thylacoleo carnifex*.
   (*f*, *g*) Incisor teeth (2nd upper), *Thylacoleo carnifex*.
   (*h*, *i*, *k*, *l*, *m*, *n*, *o*, *p*) Canine teeth (upper series), *Thylacoleo*. These teeth are functionless and never worn; the animal could consequently not be highly carnivorous.
   (*q*, *r*, *s*) Lower incisors.
4. (*a*) Lower premolar.
   (*b*, *c*, *d*, *e*, *f*, *g*) Upper premolars, *Thylacoleo*.
5. (*a*) Portions of palate with two molar teeth and a peculiar tubercular premolar of a Kangaroo.
   (*b*) Portion of mandible of a Kangaroo, showing the permanent premolar.
   (*c*) Lower incisors, *Thylacoleo*.
   (*d*) Portion of palate, *Sarcophilus*.
   (*e*, *f*) Upper incisor, *Thylacoleo*.
6. (*a*) Much-worn lower premolar, *Thylacoleo*.
   (*b*) Canine and upper premolar, *Thylacoleo*.
   (*c*) Upper premolar, *Thylacoleo*.
7. Dentition of *Thylacoleo*, except the last upper and lower molar tooth. The small tubercular teeth representing the canine and the two first premolars in the lower jaw, are covered by the premolars; the upper first and second premolars are also missing.
8. (*a*, *b*, *c*, *d*, *e*) Third upper incisors of a Kangaroo, *Macropus*.
   (*f*, *g*, *h*, *i*, *k*) Third upper incisors of a Wallaby (*Halmaturus*).
   In comparing these teeth it will be observed that they differ much, and that they are well adapted as distinguishing characteristics between the two animals, the Kangaroo and Wallaby.
   (*l*) Upper incisor of a gigantic Kangaroo.
   (*m*, *n*, *o*, *p*, *q*) Lower incisors of several species of the new genus *Plectodon* (Krefft), lately discovered at Wellington.
   (*r*) Upper premolar (1st), *Plectodon* (?)
   (*s*) Upper incisor (1st), *Plectodon* (?)
   (*t*) Premolar, *Plectodon* (?)

Australian Museum, Sydney,
7 October, 1869.

GERARD KREFFT,
Curator and Secretary.

Extract from Minutes of a Meeting of the Trustees of the Museum, held in November, 1869.

DR. A. M. Thomson stated that he had been conversing with Dr. Creed, of Scone, who presented a large jaw of a diprotodon to the Board, and that Dr. Creed was of opinion that many more fossil remains could be obtained in the district if a competent person were despatched to the place to superintend the excavations.

Dr. Thomson then moved and the Hon. Dr. Macfarlane seconded the following resolution, which was put and carried:—"That a sum of money not exceeding £25 be applied for obtaining a collection of fossil bones, &c., lately discovered near Scone, and that the Curator proceed there as soon as convenient for the purpose of superintending the excavation and securing the specimens for the Museum."

Professor Owen to The Trustees, Australian Museum.

Gentlemen, London British Museum, 1 December, 1869.

Having read in the *Times* of to-day the following notice from the "Sydney correspondent" of that newspaper, to the effect that "the Wellington Bone Caves have been explored by Dr. A. M. Thomson and Mr. Krefft of the Museum, with astonishing results," I am induced to submit to you a passage in the letter addressed by me to the Hon. the Colonial Secretary in February, 1867, and to which I was favoured by a reply, in June, 1869, announcing "That the sum of £200 had been voted by the local Parliament for carrying out your suggestion, of a careful and systematic exploration of the Caves of Wellington Valley."

The passage in my letter of 23rd of February, 1867, is as follows:—

"I would willingly devote time to the description of such specimens, or duplicates as so acquired might be transmitted for deposition in the British Museum; and these descriptions would be punctually transmitted to the Trustees of the Museum at Sydney, as materials for its Catalogue."

I

I am now engaged in preparing an illustrated work on the "Fossil Mammals of Australia, in 4to.," for which I have been collecting materials since my descriptions of the fossils from the Wellington Valley Caves obtained by their discoverer Sir Thomas Mitchell, in 1832-36. For this work many plates have been executed; and with a view of rendering it as complete as possible, I venture respectfully to beg for your valuable interest and co-operation in the contribution of specimens, which will be punctually returned or disposed of as you may be pleased to determine.

I have, &c.,
RICHARD OWEN, F.R.S.

Extract from Minutes of The Trustees of the Museum.

2 December, 1869.

THE Curator reported that he had proceeded to Scone and examined several localities where fossils had been obtained by Dr. Creed and Mr. Vernon the Government Surveyor. These remains were generally found in the banks of creeks and water-courses; the most favourable time to search for them being after a heavy shower of rain. A systematic examination of the ground such as had been carried out at the Breccia Cave at Wellington was however out of the question on account of the great quantity of earth which would have to be removed and the very brittle (in fact decomposed) state of the bones found there. The Curator informed the Board that Dr. Creed had undertaken to examine some of the caves about 30 miles from Scone, which, owing to heavy rain, could not be visited, and that he had advanced £5 to Dr. Creed to cover the expenses of this investigation.

The Colonial Secretary to Professor Owen.

Sir, Colonial Secretary's Office, Sydney, 21 March, 1870.

With reference to your letter of the 18th August last, and previous correspondence, relative to the project of exploring the limestone caves at Wellington Valley, I have now the honor to transmit, for your information, a copy of the report of Mr. Gerard Krefft's exploration of the caves, as addressed by him to the Trustees of the Australian Museum, together with a series of photographs representing the most interesting of the remains discovered.

2. A further report, which has been promised by Mr. Krefft, will be communicated to you when received; and that gentleman has been asked to furnish a list of such of the specimens obtained by him as can be spared for transmission to you, for deposit in the British Museum.

I have, &c.,
CHARLES COWPER.

The Principal Under-Secretary to The Curator and Secretary, Australian Museum.

Sir, Colonial Secretary's Office, Sydney, 21 March, 1870.

In acknowledging the receipt of your letter of the 4th November last, transmitting a copy of the report of your exploration of the limestone caves at Wellington Valley, addressed by you to the Trustees of the Australian Museum, together with a series of photographs (plates 1 to 44), representing the most interesting of the remains discovered,—I am directed by the Colonial Secretary to request that you will favour me with the further report therein promised, and that you will also be so good as to furnish a list of such of the specimens obtained by you as can be spared for transmission to Professor Owen for deposit in the British Museum.

I have, &c.,
HENRY HALLORAN.

Professor Owen to The Curator and Secretary, Australian Museum, Sydney.

My dear Sir, British Museum, 8 January, 1870.

The paragraph in the London *Times* of December 1st, 1869, from their "Sydney Correspondent," to the effect that you and Dr. Thomson had returned from your explorations with wonderful results, has kept me in a state of expectation which your letter just received, of Nov. 4th, has acceptably allayed.

From old experience of newspaper exaggerations, I did not allow myself to be too sanguine, and I am happy to say that the results which you have kindly communicated are very much those that might have been reasonably looked for; the only disappointment was the absence of human remains and works; but this is an instructive negative fact and accords with former experience of research in the Wellington caverns.

I am puzzled with the fore part of the mandible of *Nototherium;* it seems to have been broken from the rest. I cannot well make out the configuration of the grinding surface of the molar "with the median ridge," but that would be a good distinctive character. The three small teeth between the carnassial and front lamiary incisor, upper jaw, Thylacoleo, accord with a specimen from Darling Downs, sent to Sir D. Cooper by Mr. Hill.

Your note on the big bird's bone from the astounding depth of 188 feet (sinking a well?) is very acceptable; the cast will enable me to determine, perhaps, its genus. I should be obliged to Mr. Clarke if you could let me have what he has published thereupon.

I have written to Longman's, directing them to send through Trübner's the last edition of my lectures on Invertebrata and my Anatomy of Vertebrata, 3 vols. Please to report this to the Trustees as a donation to the Library of the Museum from me. I have two artists at work lithographing the Australian fossils at present at my command. I intend to premise a more complete osteology of the recent Marsupialia than has been already given. I want much a good skull of *Phascolomys platyrhinus* and better the skeleton.

Remember me kindly to Dr. Thomson with whose father I have had some pleasant chat, and believe me always Truly yours,
RICHARD OWEN.

The

The Curator and Secretary, Australian Museum, to The Principal Under-Secretary.

Sir, Australian Museum, Sydney, 30 March, 1870.

I have the honor to acknowledge the receipt of your letter of the 21st instant, requesting me to furnish a further report of my exploration of the Wellington Caves, and to add a list of such of the specimens obtained as can be spared, for transmission to Professor Owen for deposit in the British Museum.

In reply, I have the honor to inform you that the last parcel of specimens has only arrived here a few weeks ago, and that as soon as this has been examined a full report will be sent. I may state at the same time that I have forwarded already a series of duplicates to Professor Owen, and that more will be ready in a short time, a list of which will be furnished to you. Dr. Thomson will also prepare a report of the geology of that part of the Wellington district in which the caves are situated, with plans and sections of the caves added to it. A number of the more interesting and perfect specimens have been lithographed, to illustrate the catalogue of the fossil remains in course of preparation, proofs of which I have the honor to enclose for the Hon. the Colonial Secretary's inspection.

I shall do everything I can to finish the report within the next fortnight, but the amount of labour to chisel out and prepare some 5 or 6 cwt. of bones and teeth, and to classify these, is much greater than I first expected.

I have, &c.,
GERARD KREFFT,
Curator and Secretary.

EXTRACT from Minutes of the Trustees of the Museum.

April 7, 1870.

The following letters were read:—

1. From Professor Owen, F.R.S., requesting the Trustees to favour him (Professor Owen) with specimens of the fossil remains collected by Mr. Krefft and Professor Thomson at Wellington, either for description and return, or as a liberal gift to the British Museum.

The Curator also informed the Board that he had received a second letter from Professor Owen addressed to himself, wherein a request was made for the skeleton of a wombat (*Phascolomys platyrhinus*) which had been forwarded with a number of Wellington fossils by last mail. Extracts from a third letter were read (addressed to Dr. Bennett) requesting the loan of the original skull of *Zygomaturus trilobus*, described by the late W. S. Macleay, Esq. The Curator was directed to inform Professor Owen that one consignment of fossils had been forwarded already to him, and that a second collection would be despatched as soon as possible.

The Curator was also directed to thank Professor Owen for the books promised, and to state that whenever it was impossible to send original specimens, carefully made casts and photographs of the objects should be sent to him.

The Principal Under-Secretary to The Curator, Australian Museum.

Sir, Colonial Secretary's Office, Sydney, 20 April, 1870.

In acknowledging the receipt of your letter of the 31st ultimo, I am directed to inform you that the Colonial Secretary approves, under the circumstances therein stated, of your postponing for a short time the presentation of the further report of your exploration of the Wellington Valley Caves, and of the list of specimens available for transmission to Professor Owen, as called for in my communication of 21st March last.

I have, &c.,
HENRY HALLORAN.

Australian Museum, Sydney, 29 April, 1870.

RECEIVED from Mr. Gerard Krefft, Curator and Secretary of the Australian Museum, four cases of fossil remains addressed to Professor Owen, F.R.S.

HENRY HALLORAN.

The Curator and Secretary, Australian Museum, to The Colonial Secretary.

Sir, Australian Museum, Sydney, 10 May, 1870.

Referring to my preliminary report of the exploration of the Wellington Caves, I have the honor to inform you that the joint labours of Professor Thomson and myself have been brought to a close, and that the specimens collected have been examined, and a series of duplicates put aside for presentation to the British Museum.

These duplicates comprise specimens of almost every genus observed, and I cannot do better than present to you a catalogue of the collection, which will enable Professor Owen to form some idea of the animals which inhabited the Wellington District during the post-pleiocene period.

I add a description of the caves and the surrounding district by Professor Thomson, in whose opinion regarding the probable death of the animals at the caves I concur. It would have been impossible for the few carnivorous species, such as the dog, thylacine, or sarcophilus, to have brought all these bones together, as their habits are not gregarious. The fossil remains are arranged in the following order:—

CLASS—MAMMALIA. *Section—Placentalia.*

ORDER—CARNIVORA. *Genus—Canis.*

1. Canine of a dog (*Canis*).
2. Molar of dog.

ORDER?

Mylodon (?) *Australis* (Krefft).

A distal or ungual phalanx of some unknown animal, resembling the same bone of a *Mylodon* (the distal phalanx of the pollex).

The specimen referred to is quite unique, and proves the existence in Australia of a large sloth not unlike the South American genus *Mylodon;* the size of the bone is about 1 inch and 2 lines in length. Another much smaller distal phalanx, also covered by a "hood," is in the collection, but this belongs evidently to either a dog or cat-like creature.

ORDER—

ORDER—RODENTIA. *Genus—Mus or Hapalotis.*

The rats and mice are well represented by numerous bones and teeth, some of which resemble the teeth of living species; vast quantities of red earth, impregnated with the remains of rodents and lizards, occurred in almost every part of the caves, but more so in one crevice, where thousands of leg-bones might have been picked out.

It is impossible to distinguish the exact number of species, but they have been estimated at from four to ten. The remains of the Australian beaver-rat of the genus *Hydromys* were not found, though the genus is peculiar to this country at the present day.

Section—Implacentalia.

ORDER—MARSUPIALIA. *Family—Phascolomyidæ. Genus—Phascolomys.*

The wombats have left many remains, consisting principally of fragments of jaws, loose teeth, and the larger bones of the extremities. The most common fossil species is the western wombat (*Phascolomys latifrons*), now restricted to South Australia, whilst the well-known New South Wales wombat is comparatively rare in the collection.

The total number of species at Wellington is estimated at about ten. Two of these are twice the size of the *Phascolomys platyrhinus.*

Family—Phalangistidæ. Genus—Phascolarctos.

Phascolarctos cinereus? (Koala):—Of this animal, a single first upper incisor-tooth was found.

Genus—Phalangista.

Phalangista vulpina? (Common or Vulpine Phalanger):—Of this species remains are also rare; a few fractured lower jaws is all we obtained.

Genus—Belideus.

Belideus, spec.? (Sugar Squirrel):—The single specimen found consists of the anterior portion of the lower jaw, indicating a small species.

I class the gigantic extinct marsupials of the genus *Diprotodon, Zygomaturus, Nototherium, &c.*, with the phalangers, because their incisors resemble the teeth of the phalanger more than those of the kangaroo, and because their lower jaws are deficient of the wide excavation at the base of the coronoid process so conspicuous in the jaws of all kangaroos.

The structure of the feet of these large animals will probably be found (when the missing bones are discovered) to have resembled that of the still living phalangers, such as the *Phascolarctos* and *Phalangista*, or the wombats.

Genus—Zygomaturus.

A few broken teeth prove the presence of this interesting form at Wellington:—

No. 1 is a part of a second upper molar, with slight talon at the base of the posterior eminence.

No. 2 is a right upper premolar, with two long fangs, sharp, triangular, front eminence, with depression behind and the trace of a talon on the side.

There is in the Museum collection a splendid series of fossil remains, indicating at least two new species of the above genus, but as the list comprises Wellington specimens only, they are not enumerated here.

Genus—Diprotodon.

Of this, the largest fossil genus, several species occur at Wellington, but only two portions of jaws with perfect teeth were secured. The other remains are very fragmentary.

After careful examination of the diprotodontoid remains I have come to the conclusion that three species existed—one identical with *Diprotodon Australis*, and two others smaller in size and new to science.

Genus—Thylacoleo.

The true position of this interesting animal among the phalangers was pointed out by me some years ago, and the large series of teeth and mandibles discovered during the last exploration of the caves corroborate my former statement. The following specimens are in the collection:—

A portion of the anterior part of the skull of the right side, with perfect canine (the enamelled surface of which is $\frac{3}{8}$ of an inch in length), broken off first and second premolars, and perfect third premolar $2\frac{1}{4}$ inches wide.

A perfect third premolar tooth (left upper), with portions of bone adhering to it; greatest width, $2\frac{1}{8}$ inches.

A portion of the skull (left side), with perfect and much worn third premolar and molar; the worn surface is $\frac{3}{8}$ of an inch in width in its broadest part.

A very fine right upper premolar imbedded in hard breccia, but without the posterior fang; this tooth belonged to a young animal and shows little wear.

Three right upper premolars of young animals without fangs; one of these teeth must have been just cutting the gums, as it is still hollow.

A fractured much worn upper third premolar of the right side.

A nearly perfect upper third premolar of the right side, with crown perfect but fractured fangs.

The anterior half of a left upper premolar without fang.

A fractured left lower premolar.

A much worn left lower premolar, with a portion of the jaw adhering to it.

A fractured right mandible with almost perfect dentition; that is, incisor, sockets of canine, first and second premolar, perfect third premolar, perfect molar, and socket of second (and last) molar.

A fractured mandible of the left side with socket of incisor, canine, first and second premolar (all very small, occupying only $\frac{3}{8}$ of an inch in length and $\frac{1}{4}$ inch in width), perfect third premolar, molar, and tubercular last molar. The length of space occupied by the great premolar and two molars is $2\frac{1}{2}$ inches. The permanent premolar and molar are much worn, and are smaller than other specimens obtained in the same cavern. It is undoubtedly the type of a new species.

A fractured mandible of the right side with third premolar and molar (not perfect).

A fractured mandible of the right side with perfect premolar and molar and sockets of the missing teeth.

A cast of a right lower incisor fitting into the empty socket of the above specimen prepared before any authenticated incisors of *Thylacoleo* were discovered.

Three fractured lower incisors of the right side.

Four fractured lower incisors of the left side.

Two perfect left upper first incisors.

Three fractured right upper incisors.

A much worn right lower third premolar, with portion of the jaw.

The following teeth were found together. They formed part of a skull and lower jaw, injured in being exhumed; they belong to the right side:—

A fractured third premolar of the upper series, a canine, and three upper incisors. A lower incisor, third premolar, and molar.

A very large upper canine of probably a distinct species of *Thylacoleo.*

A second upper incisor.

Three fractured lower incisors and a perfect one of a very young animal.

Seven canines of probably several species (upper).

Two second incisors (upper).

Six third incisors (upper), some of which are fractured.

The crown of a lower molar.

The crown of a lower molar, much worn.

A tooth, which in all probability will prove to be one of the upper premolars of the *Thylacoleo;* this tooth is not yet known, but its fang resembles the broken off teeth in some of the Museum specimens.

Four upper molars of various species of the genus *Thylacoleo.*

Some lower incisor teeth of another new animal allied to the *Thylacoleo* have been found, for which I have proposed the generic term of—

Plectodon.

Plectodon.

These much fractured teeth are distinguished by a dental fold on the inner side, raised in one specimen about 2 lines above the other portion of the tooth (at the tip), and gradually diminishing. The outer surface is marked by a shallow groove in the middle. The enamel is rugged, resembling the worm-eaten appearance exhibited by the molars of the *Diprotodons*, but the marks are not so deep. The other specimens are very fragmentary, but the commencement of the fold is well marked in each. Besides these relics, a few shaft bones belonging to the first or inner toe of a large phalanger have been obtained, which are referable to either the *Thylacoleo* or *Plectodon.*

FAMILY—MACROPODIDÆ.

No other group of Australian mammals exhibit so great a difference between the size of the male and female, or so great a change in dentition, as kangaroos at various periods of their existence. It is obvious, therefore, that many specimens of teeth would be required (particularly of the front upper incisors), before any supposed new species could be satisfactorily established. Under these circumstances it will be well to enumerate only the very best and most characteristic examples of the genera discovered, and to reserve the full account of the group till all the specimens from other parts of Australia have been compared with the still living species, of which the Museum collection contains a fine series of skulls and skeletons.

The Wellington relics will be arranged as follows :—

Genus—Bettongia.

Numerous remains, including some crushed but otherwise perfect skulls, have been found of perhaps two species of bettongs or kangaroo-rats, the greater portion of which appear identical with the common bettong still living in New South Wales (*Bettongia rufescens*).

Genus—Hypsiprymnus.

The kangaroo-rats proper of this genus are not so common as others ; a few lower jaws comprise all the specimens obtained.

Genus—Halmaturus.

This term has been adopted for those kangaroos which have a large, compressed, and permanent premolar tooth in each ramus. The following are some of the best specimens in the collection :—

Halmaturus, spec.?

The left anterior portion of the skull of a large halmaturus with much worn dentition. The first upper incisor is very large—about the size of a (small) horse's upper front tooth ; the second incisor is one-third of the first, and the last has been broken off. The space which the dental series occupies is nearly 7¼ inches in length. The premolar is ¾ inch long.

The anterior portion of the skull of a gigantic halmaturus, with perfect incisors, except the first one of the right side, which is broken off. The first is the largest, the second half its size, and the third slightly larger than the second. The two posterior teeth are marked by the deep fold so well exhibited in the common black wallaby (*H. ualabatus*).

The following series of teeth may be referred to gigantic wallabies of the genus *Halmaturus*. They are mounted on a card (No. 3), and exhibit the characteristic forms of the extinct wallabies' incisor teeth exceedingly well. Nos. 1, 4, 5, 6, 12, and 13 are first upper incisors, and probably all of different species ; No. 12 is the largest, still embedded in breccia, and measures ¾ of an inch in its widest part ; the enamelled portion is 1¼ inch in length.

Nos. 2, 7, 8 are second upper incisors (No. 7 much worn), also of large size animals. No. 3 is a third upper incisor ; and Nos. 9, 10, 14, and 15 are first upper incisors of animals half the size of the previous ones.

Plate 4. Nos. 13, 14, 18, are three molar teeth of large wallabies, more or less fractured.

Plate 8. No. 7 is the distinguishing type of the largest of these molars. It is an upper one of the right side, and the worn surface of the anterior lobe is ¾ inch wide.

Five fractured teeth as large as the previous one.

One upper molar with medium ridge between the two lobes, and strong talon at the base nearly surrounding the whole tooth ; extreme length, 1½ inch ; breadth, 1¼ inch. This large tooth, though at present arranged with the genus *Halmaturus*, may prove eventually to belong to a new species of *Diprotodon* or *Nototherium.*

Two portions of the lower jaw of a large Halmaturus, with two perfect molars.

Genus—Macropus.

This genus comprises the kangaroos proper, with feebly developed premolar teeth which are soon shed. True kangaroos with the above dentition were as rare during the post-pleiocene period as they are at present, and the remains appear almost identical with those of the common kangaroo (*Macropus major*), the western kangaroo (*Macropus ocydromus*), the wallaroo (*Macropus robustus*), and the red kangaroo (*Macropus rufus*).

The following are the best specimens in the collection :—

Macropus, spec. ?

1. Four (third) upper incisors.
2. Portion of the palate of a gigantic species, with complete dentition on the right side and the two first molars on the left. The premolar has been shed. The space occupied by the four right molars is rather more than 2¼ inches ; and between the second molars the palate and teeth measure the same distance across.
3. Portion of the right ramus of the upper jaw of a young animal, with the three first molars, spurious premolar, and the permanent premolar above it.
4. This specimen is distinguished by a very small conical premolar in front of the first and second molars. All the teeth are worn, though not to such a degree that the animal would be classed as aged. Conical, and more or less permanent premolars have not been noticed before in this group of animals. There is a possibility that the form of the tooth is accidental, and the specimen will be classed with those allied to *M. major.*
5. A portion of the right ramus of the upper jaw, with the permanent premolar just breaking through and the three first molars. Allied to *M. rufus.*
6. Portion of the right mandible of the lower jaw, with premolar (not quite through) and three first molars. Closely allied to *M. ocydromus.*

The collection contains many loose teeth and bones supposed to be those of various species of kangaroos, but which it is impossible to distinguish with certainty as such. The permanent incisors and the premolar teeth are the only characteristics on which we can depend, in classifying this group of animals into the two sections of wallabies or *Halmaturi* and kangaroos or *Macropodidæ*. Those specimens only as to which no doubt can arise are mentioned in this list.

Genus ?—(Wombat-like kangaroos).

The last group of the series is composed of those animals which have very short heads, broad and powerful premolars, strongly anchylosed mandibles, and feeble lower incisors more vertically inserted than those of the other genera mentioned.

Halmaturus (?) Thomsonii (Krefft).

This species was obtained at the first examination of the caves in 1866. The typical specimen consists of the anterior portion of a left mandible with perfect first and second molar. The premolar is broken off, and the remaining sockets show that it was a compact powerful tooth. The median ridge of the molars is thin, with many folds on the inner side. The hind part of the second lobe is also strongly ridged or folded, and has a central triangular mark in the middle of the two last molars. The articulating symphysis shows that the mandibles were closely united together, and that the action peculiar to the incisors of modern kangaroos must have been altogether wanting. The fang of the incisor is of moderate size, with the crown tapering, and probably slightly incurved at the tip; the tooth is too much fractured to give a correct description of it.

2. The second specimen consists of a fractured right mandible, with four perfect molars and spurious premolar ; the incisor is missing, as is also the permanent premolar, which, judging from the size of the empty socket below the spurious tooth, must have been large and compact.

Halmaturus

Halmaturus (?) *Scottii* (Krefft).

1. This is an allied species of much larger size, but with a smaller and more compressed premolar which is still imbedded in its aveolous and resembles in form the premolar of *H. atlas*. The specimen referred to is a fractured mandible of the left side, with the last molar breaking through, the three first grinders perfect, and a fractured portion of the spurious premolar; the permanent tooth is exposed beneath.
2. A much-worn molar of the upper series; no other teeth of the upper portion are known to us.

FAMILY—PERAMELIDÆ.

The bandicoots appear to have been identical with the still living species. The few remains in good preservation prove the existence of a bandicoot allied to *Perameles nasuta*, and of another the size of *Perameles obesula*, while a third species is doubtful. Though fractured rami and teeth are scarce in the collection, many bones of *Peramelidæ* occur; it is impossible however to say more about them as the difference between the two or three species obtained is but very slight.

Genus—Peragalea.

This singular genus has not been observed before in any collection of fossils; and only one species occurs, which is larger and probably otherwise differs from *Perameles lagotis*. Of it we obtained only a few teeth and fractured mandibles.

FAMILY—DASYURIDÆ.

Genus—Antechinus.

A perfect ramus ½ inch in length represents the insectivorous section of the genus *Dasyurus*. No other fragments have been found, but owing to the small size of these animals they may have been overlooked. Remains of the genus *Antechinus* have never been observed before.

Genus—Dasyurus.

Dasyurus viverrinus?—(Native Cat).

Bones and teeth of a small dasyure, probably identical with the present *Dasyurus viverrinus*, have been collected.

Dasyurus maculatus.

Larger remains referable to the so-called "Tiger-cat," or Spotted-tailed Dasyure, also occur.

Genus—Sarcophilus.

Sarcophilus ursinus (Tasmanian Devil).

The remains of the "devil" observed at the caves are identical with the still living black dasyure of Tasmania; a larger species also occurs for which the name of *S. laniarius* has been proposed by Professor Owen. It would be useless to enumerate all the specimens of teeth and bones collected, as they are very numerous and comprise almost every portion of the skeleton of either *D. ursinus* or *D. laniarius*.

Genus—Thylacinus.

Of the thylacine or tiger we also noticed two kinds, one about a third larger than the other (Owen's *Thylacinus spelæus*); the smaller one is identical with the still living *Thylacinus cynocephalus*, the tiger or hyæna of Tasmania.

These rapacious animals were probably destroyed by the dog as very few of their remains have been discovered. They may have found shelter in Tasmania shortly before volcanic disturbances prevented the passage of their enemies (the dogs) across the Straits. It is a singular fact, corroborating this supposition, that the dog was not known to the natives of Tasmania, and that no remains of such an animal have yet been found there.

ORDER MONOTREMATA.

Of the two singular genera belonging to this strictly Australian order, very few remains have been discovered, and none as yet of the *Ornithorhynchus*. The echidna or ant-eater has been observed before, and is represented by a fossil arm bone from Queensland. The caves of Wellington yielded a fractured femur of a species larger than our present *Echidna hystrix*.

CLASS—AVES.

Remains of birds are so scarce that the genera and species to which they belong cannot now be determined. No flightless bird as large as the dinornis of New Zealand has left its bones in the neighbourhood of the caves (judging from our very limited survey of the district), and the greater number of specimens collected indicate species which do not exceed the common bustard (*Eupodotis Australis*) in size. I have noticed emu bones (*Dromaius Novæ Hollandiæ*) from other localities, and have examined a sacrum of such a bird, in the possession of the Rev. W. B. Clarke, M.A., F.G.S., which looks as if it had been found at Wellington, but no further traces of large birds have come under my notice. It may be as well to mention, that a large femur of a bird the size of a moa (*Dinornis robustus*) was found not long ago in Queensland, at a depth of 188 feet below the surface. It is the first specimen of the kind noticed in Australia, and is deposited in the Australian Museum.

CLASS—REPTILIA.

The bones and teeth of small reptilian animals were numerous in some parts of the cave, but very few specimens are indicated exceeding in bulk our common *Hydrosaurus varius*.

The reptiles noticed belong to the following groups:—

ORDER—CATAPHRACTA.

Being fragments of bone and the broken carapace of a river tortoise (*Chelodina*).

ORDER—SAURIA.

The remains of lizards are referable to the

Genus Hydrosaurus.
„ Cyclodus.
„ Trachydosaurus.
„ Hinulia.

ORDER—OPHIDIA.

A few small vertebræ afford the only evidence of the existence of snakes that could be obtained.

This closes my account; and I now add the report of Dr. A. M. Thomson, Professor of Geology at the Sydney University, which will be found of great interest to geologists and others, not only in the Colonies but also in other parts of the world. Dr. Thomson has re-visited the caves since our exploration, for the purpose of preparing a correct plan, and to inspect the excavations of George Porter, the miner left in charge. Dr. Thomson expresses himself much pleased with Porter's work, and as I can testify that Porter has discovered many very valuable specimens, it would be well to appoint him to take charge of the caves at a small salary. Professor Thomson remarks as follows:—

"A very full account of the Wellington Caves has been already given to the public by Sir Thomas Mitchell in his 'Three Expeditions'; still it may be well to add here a few further notes on the subject, chiefly in reference to the recent explorations. The caves are situated on the right bank of the Bell tributary, about 6 miles south of its confluence with the Macquarie River. They occur in the low ground of the valley, in a stratum of limestone which strikes in a southerly direction, and may be traced up the stream for many miles. The limestone is hard and finely crystalline, of a pale blue colour, and mostly massive, weathering into huge rounded blocks which are minutely furrowed and fluted on their exposed surfaces by the weather, thus giving rise to an appearance which Sir Thomas Mitchell has well described as like half dissolved ice. In places, however, it presents thin and well-defined stratifications, generally with a high dip; and where these crop out at the surface they run for a long distance in parallel lines, like the furrows of a plough. The limestone at Wellington exactly resembles the rock of many other

other limestone districts of New South Wales, where caves and 'swallow holes' are of common occurrence. Though the formation at Wellington exhibits flexures and irregularities in its stratified portions, which stand in the way of measuring its thickness, yet on the whole it can be observed to possess a general dip to the west, on which side it is overlaid by quartzite, passing upwards into a vast deposit of hard red conglomerate. This conglomerate is one of the most conspicuous geological features of the district; it forms a rugged and lofty range, extending from Mount Arthur, near Wellington, in a southerly direction, to the Catombal Hills, and forming the western boundary of the valley of the Bell; its dip is to the west; about 3 miles west by north of the caves it is overlaid by fossiliferous limestone similar to that beneath it. Excepting a few obscure corals and encrinital stems the limestone at the caves is destitute of fossils. On travelling eastwards from the cave the rocks passed over are vesicular basalt, felspar porphyry, trappean conglomerate and ash beds, quartzite, and limestone of the same character as at the caves. All these rocks strike north and south. The conglomerates and ash beds indicate that the igneous rocks were originally poured over the sedimentary deposits and contemporaneously interbedded with them. The basalt may be an overlying deposit of a much more recent date. All the sedimentary rocks of the district have a semi-metamorphic character; the limestone fossils comprise *Stromatopora, Receptaculites, Favosites, Halysites, Heliolites, Cœnites, Tentaculites, Pentamerus, Rhynconella, Orthis, Spirifer, Atrypa reticularis* and others, *Strophomena, Pterinœa, Grammysia, Looxnema, Euomphalus, Orthoceras, Lituites*, thus indicating that the series at Wellington forms a part of the wide-spread formation which ranges in a meridional direction through New South Wales and which is referable either to Upper Silurian or Devonian Age.

"The caves at Wellington are about half-a-mile from the river, and their entrance a hundred feet above it. The principal attraction to visitors is the 'Great Cave,' which has a steep and rugged entrance leading into a spacious and lofty vaulted chamber, ornamented by one grand stalactite. The floor of the cave is covered to some depth with loose dry red earth; in one spot Sir Thomas Mitchell describes a dry white ashy dust, into which one of his party sunk up to the waist; this is still to be found in a corner behind the stalactite. At the same spot the limestone walls show a fine section of thin flexuous stratification. Elsewhere in the cave the walls and roof are massive and unbroken, and suggest that the whole structure has been excavated out of the solid rock. In 1852 the late Mr. Stutchbury, Government Geologist, examined the caves, but he adopted a view which would not now find support—that the limestone corresponds to an ancient coral reef in which the cave was a space left naturally vacant. The sound and sculptured walls and roof, as well as the arches, pillars, and buttresses of rock which remain, preclude the notion entertained by some observers that the cave is the result of disruption and subsidence, but offer no difficulty to the commonly received opinion that such structures are caused by the dissolving action of carbonic acid water, which has the power of gradually wasting away limestone rocks.

"The dimensions of the Great Cave may be gathered best by reference to the plans given in Sir Thomas Mitchell's work, where all the other features of interest are also shown. Though a few fragments of bone have been found in the Great Cave, no discovery of importance has yet been made there.

"The cave at Wellington, which possesses such great scientific interest, is the 'Breccia Cave,' of which the general configuration may be seen on the accompanying plan. Its entrance is a few yards west of the Great Cave. It has more the appearance of a pit or well; from its difficulty of access and very small size, it is much less frequented than the Great Cave. Its mouth is surrounded by masses of limestone, which appear like detached blocks; but this is owing to the peculiar mode in which the comparatively soluble stone wastes away, and not to any former violent disruption such as some observers have considered requisite. A hard red breccia, full of white bones, fills up the spaces as if it were a cement, which served to bind the rock-masses together. The cave is entered by a nearly vertical pit, the walls of which present the appearance just described for a depth of 17 feet, where the first landing-place is reached. From this the next descent is for 11 feet, between two nearly vertical walls of rock, landing midway in an irregular fissure extending about north and south. The floor of the fissure slopes away from the entrance in both directions, and consists of loose stones and red earth which have fallen down or been washed in from above; the fissure is roofed in by the irregular rock-masses which form the surface of the ground.

"Leading off this fissure at the south end there is a narrow passage or tunnel in the solid rock, through which it was only possible to crawl; it conducts to a small cavern about 12 feet high, entirely cut out of the solid limestone. Its floor consists of loose dry red dust, in which bones were plentiful, and could be obtained by sifting or washing; several cart-loads of it were hauled to the surface under great difficulties, and subsequently washed; under-ground it was sifted and picked through for a depth of about 4 feet; holes were also sunk in it, so as to test it at various depths; one hole was put down 15 feet, and even then a boring rod could be pushed much further; but as no bones were found at this depth, and the difficulty of preventing the earth falling in increased, the sinking had to be given up. The red earth at this level, which was 53 feet below the surface, was moist, but of the same character as the rest of the deposit. The small cavern was thus proved to be part of a lofty cave, which was filled nearly to the roof with red earth. The passage leading to this cavern was made easier of access by removing the red earth, which covered its floor for a foot or two deep, and in this some good specimens were found. A shaft was also sunk in the floor, at the south end of the fissure, which led to the discovery of the carapace of a tortoise, also some fine jaws of the Thylacoleo, with the long missing incisor teeth. At about 12 feet the sinking was interrupted by large boulders, but the supply of bones had already fallen off. In one part of this shaft a remarkable abundance of small bones in a very perfect condition was met with, a single spadeful of earth affording several hundred rib, thigh, and jaw bones of small rodents and kangaroo rats. From this shaft the rest of the earth in the fissure was dug through and examined as far as practicable. In the north end of the fissure a slight recess in the rock led off on the west side, and terminated in a window-like opening barely large enough to admit the body; this recess opened into the upper part of a small arched cavern; on the inside of the window there was a perpendicular descent of 11 feet before reaching the floor. This cavern contained loose red earth, but much damper than usual, owing to water which was trickling in from the roof. The appearance of this small cavern has been much altered by the necessary excavations; the window by which it is gained has been enlarged by cutting away a stalagmitic crust and an underlying deposit of red breccia. After searching the floor of this cavern with very fair results, though without being able to penetrate through the red earth, a drive was next cut in a mass of red clayey breccia on the south wall; owing to the confined space and the irregularities of the rock it proved a work of some difficulty, but many of the choicest specimens were discovered in this situation. The earth thrown out of the drive has so filled up the cavern that it is now possible to step directly from the entrance window on to the floor. On breaking open a small roundish stalactite upon the roof of this cave it was found to be a mass of the red breccia encrusted with carbonate of lime.

"Viewed as a whole the Breccia Cave has the appearance of being an irregular chasm, extending downwards into the earth and filled up for the most part with loose red earth or solid breccia. Near the surface we find hard red breccia, in which bones are exceedingly abundant, but perfect specimens cannot be detached owing to their brittle state and the toughness of the matrix. But underground the deposit is loose and forms either a dry red powder from which the bones can be sifted clean, or else a slightly tenacious clay in which the bones are covered with a hard reddish calcareous crust. On the whole, the bones are more plentiful in the upper portions, and become scarcer as the depth increases, which would lead to the supposition that they were originally deposited near the surface, and there are other appearances which favour this view. Within a few feet of the mouth of the Breccia Cave there lies a circular mass of carbonate of lime, quite different in appearance from the other limestone rocks. Two similar masses also occur 30 yards to the south; their coarsely crystalline texture, white colour, and rounded form, make them resemble the base of an old stalagmite; and if this is really the case, what is now the surface of the ground has formerly been the floor of a cave. It is reasonable to suppose that in this ancient cave, the upper part of which has been entirely swept away, the organic remains may have accumulated; and as the demolition went on, the osseous floor, which was being gradually undermined by the galleries and chambers now forming the Breccia Cave, has either fallen in or been washed down to lower levels mingled with red earth. Such a slight degree of removal would account both for the position now occupied by the breccia, filling up as it does the spaces between the rocks, as well as for the scattered and fractured condition of the bones and their freedom from all water-worn appearance. In the breccia large and small bones are mixed up indiscriminately together, lying in all sorts of positions; there are no signs of stratification; the large bones are mostly fractured but never water-worn; many of the smaller bones and sometimes the minutest processes of the bones are undamaged. In no case where the various bones of a limb, much less those forming an entire skeleton, found lying together in a natural position, though it often happened that several bones belonging to one and the same organ were discovered not far apart. The red earth in which the bones are embedded is partly composed of the soil of the neighbourhood, which is derived from the hills of trap rock rising immediately to the east of the cave; the rock affords by its disintegration a deep red soil, which is the only kind to be found within a considerable distance of the caves. But a similar red earth containing fossil bones is found in the limestone caves of Molong, Boree, the Coodradigbee River, and other places where the surrounding soil is probably of a very dissimilar character. A large proportion of the earthy accumulation in both the Great and the Breccia Cave is undoubtedly soil which has been washed in.

"The

"The removal of the upper part of a limestone cave no doubt implies a great amount of waste, but it is easy to show by reference to other phenomena in the neighbourhood, that denudations of equal magnitude have occurred possibly within similar limits of time. A striking instance of this can be seen in the Cudgegong, an affluent to the Macquarie from the east, and joining the river only 14 miles in a direct line higher up than the Bell. In the valley of the Cudgegong the gravels which mark the former course of the stream, and which now form the "leads" of the gold-digger, deviate widely from the present water channel; for instance, at Two-mile Flat, some distance below Mudgee, the old river described an elliptical course of at least 3 miles round the flat, but having now cut through the barrier of greenstone rock which formerly diverted its course, it makes the same descent in half-a-mile; but what is more to the point, is the occurrence along this river valley of outliers or detached areas of basalt. These have been sunk through and tunnelled under by the gold and diamond miners, and in all cases the igneous rock is found to be an overspreading sheet which covers an old river gravel, and abuts against the rocks which bounded the ancient valley. The basaltic outliers are traceable for a distance of at least 17 miles, though the site of the volcano whence they were poured forth has not been discovered. The thickness of the igneous masses, wasted as they now are, exceeds in many places 30 feet. It is evident that an enormous volume of lava must have poured down this valley in times gone by, to form a continuous sheet even of the limited dimensions which are still traceable. But now all that remains of this once extensive flow are some fragmentary patches of a few acres, each several miles apart. The old gravel which these basaltic outliers overspread rests about 40 feet above the bed of the river, but unfortunately no fossils have yet been found to indicate its exact age.

"This illustration may help to show that the changes supposed to have occurred at the caves are paralleled if not exceeded by the denudations in the neighbouring valley of the Cudgegong. Patches of basalt occur at various points along the course of the Bell and even on the Macquarie River below the confluence of the former. It is highly probable that they are the remnants of some late tertiary lava stream which once swept down the Bell valley; though to establish such a point further investigation would be needed. About half-a-mile east of the caves the rocks consist of vesicular basalt. To the south of the sources of the Bell lie the lofty ranges of the Canobolas, attaining an elevation of 4,600 feet, and forming part of the water-shed between the Macquarie and Lachlan Rivers. This mountain, which rises 50 miles south of the caves, is a mass of basalt, and the country around its base is overspread by the igneous rock for many miles. Numerous hills, composed mainly of Silurian rocks, present on their summits a horizontal capping of basalt. A hill of this description can be seen about 5 miles S.S.E. of the caves. One of the most striking features of the Geology of New South Wales consists in the enormous areas which are covered by an overflow of basalt; this igneous material occurs on some of the most elevated parts of the country, capping lofty isolated hills, and whatever its age may prove to be it must have originated before the existing river system was established. In a few instances basalt is found in the river valleys overlying ancient gravels, and probably derived from some much more recent flow, but the latter mode of occurrence is by no means so general as in Victoria, neither can we here discover the volcanic craters or points of eruption as in the neighbouring Colony. But to pursue this subject further would be irrelevant to this report. I am of opinion, however, that these considerations have the greatest import in connection with the Tertiary Geology of New South Wales.

"It has been already stated that the Breccia Cave is now 100 feet or so above the river, and half-a-mile away from it; but at the time when the bones were accumulating the river probably ran much nearer the cave, and the valley wore a different aspect. The caves may have served as slight drainage channels for the rain which fell within a short space around, like many similar hollows in limestone rocks; rainwater now washes into some parts of the caves. A cave situated near the bank of a river which is liable to sudden floods, would not be an unlikely spot to receive such an accumulation of bones as we now find. Animals which had taken refuge in it may have been hemmed in by the waters and drowned. At times too, it may have served as a den for the carnivorous Thylacines, whose remains are mingled in abundance with those of extinct wombats and kangaroos, the herbivorous forms on which they preyed. Several bones have been found which showed distinct marks of having been gnawed by a carnivorous animal. Fissures and openings, such as are common in limestone rocks, often serve as pitfalls for the larger animals, but would have proved no source of danger to the smaller creatures whose remains occur here in such abundance. The breccia in its present condition does not afford any clue to the original cause of the accumulation. One supposition which may be mentioned is, that the animals were poisoned by carbonic acid or some other deleterious gases issuing from the ground. In a cave or any other confined space the gas would be even more dangerous than in the open air. In this case the emanation may have risen through the fissures of the hard crystalline limestone. The escape of such gases from the soil is mostly limited to volcanic countries; but in late tertiary times this part of Australia did not possess the same repose from volcanic action as at present. The basalt in the valley of the Cudgegong at least shows this. In other parts of Australia animal remains have been found buried in alluvial soil and concentrated in great abundance within a very limited space; this mode of occurrence has given rise to the notion that the area once formed a lake, and the creatures were either drowned there or their carcasses washed into it. Still, the escape of poisonous gases from the spot might equally well explain the occurrence.

"In the caves at Wellington no vestiges of man, whether in the shape of bones, weapons, or works of art, have been discovered.

"In addition to the two caves already mentioned (the Great Cave and Breccia Cave) there are no others, except a few small holes and cavities which are seldom or never entered.

"A little breccia occurs in one of these, situated 50 yards south-east of the Breccia Cave; but no fossils of any importance have been obtained there. There was nothing to be found in the sloping subterranean channel between the Breccia Cave and the river which Sir Thomas Mitchell alludes to in his work."

A large number of duplicates, including 1,000 partly determined specimens, have been despatched to Professor Richard Owen, F.R.S., for the British Museum; and when all these objects have been examined by the great anatomist, new facts will probably be brought to light, and Australia will maintain its reputation as the "Land of Wonders."

GERARD KREFFT,
Curator and Secretary.

LIST of Specimens collected by order of the Honorable the Colonial Secretary, at the Limestone Caves of Wellington, New South Wales, and forwarded to Professor Richard Owen, F.R.S., British Museum, London:—

First List, per Mail.

No. 1. Lower jaw, *Sarcophilus.*
2. Part of upper ditto.
3. Part of upper ditto.
4. Left upper incisor, *Thylacoleo.*
5. Left lower incisor, ditto.
6. Right lower incisor, ditto.
7. Third upper incisor, ditto.
8. Third upper incisor, ditto.
9. Third upper incisor, *Thylacoleo.*
10. Third upper incisor, *Halmaturus.*
11. Third upper incisor, ditto.
12. Right lower incisor, ditto.
13. Left upper incisor, *Platifrons.*
14. Right upper incisor, ditto.
15. Right upper incisor, ditto.
16. Left lower incisor, ditto.

Sydney, March, 1870.

GERARD KREFFT.
Curator and Secretary.

The Colonial Secretary to Professor Owen,

Sir, New South Wales, Colonial Secretary's Office, Sydney, 28 May, 1870.

Referring to my letter of the 21st March last, and previous correspondence, relative to the exploration of the Limestone Caves at Wellington Valley, I have now the honor to forward a copy of the further report which has been furnished by Mr. Gerard Krefft, Curator of the Australian Museum, together with its enclosures, comprising a copy of Dr. A. M. Thomson's report on the caves, a further series of sixty-two photographic plates of the specimens collected, and a catalogue of duplicate specimens set apart by Mr. Krefft for presentation on behalf of this Government to the British Museum.

I have, &c.,
HENRY HALLORAN,
For the Colonial Secretary.

Professor

Professor Owen, to The Colonial Secretary.

Sir, British Museum, London, 20 May, 1870.

I have the honor to acknowledge the receipt of your letter of the 21st March, 1870, enclosing the report of Mr. Gerard Krefft's exploration of the limestone caves at Wellington Valley, the locality referred to in my letter of 18th August, 1869, and under separate cover a series of photographs representing the most interesting of the remains discovered in those caves.

The results of the exploration conducted by Professor Thomson and Mr. Krefft, as given in the report, and illustrated by the photographs, in regard to novelty, instructiveness, and number of specimens, surpass my expectations, and afford good ground for continued support and encouragement in the exploration of limestone caves both in Wellington Valley and in other localities of Australia.

Mr. Krefft's collections will form an important element in working out the ancient history of the forms of animal life peculiar to the Australian Continent, and I cannot sufficiently express my grateful sense of the prompt and liberal response made to my original appeal, and for the generous intention to transmit for deposition in the British Museum such specimens as the Trustees of the Museum of Natural History of Sydney may be pleased to spare.

I have, &c.,
RICHARD OWEN.

The Principal Under-Secretary to The Colonial Agent in London.

Sir, Colonial Secretary's Office, Sydney, New South Wales, 15 June, 1870.

I have the honor to forward herewith a bill of lading for two cases shipped to your address on board the mail-steamer "Malta," and to state that the case containing fossil specimens is intended for Professor Owen, British Museum.

I have, &c.,
HENRY HALLORAN.

Professor Owen to The Colonial Secretary.

Sir, London, British Museum, 27 September, 1870.

I have the honor to acknowledge the receipt of your letter of the 28th May, 1870, and also of the further Report by Mr. Gerard Krefft to which it refers, together with the enclosures, comprising a copy of Dr. A. M. Thomson's Report on the Caves, and a further series of sixty-two photographic plates of the specimens collected, and a catalogue of duplicate specimens set apart by Mr. Krefft for presentation, on behalf of your Government, to the British Museum.

I have the further pleasure to announce the safe reception of that valuable series of specimens corresponding with Mr. Krefft's list, all which will be submitted by me to the next meeting of the Trustees of the British Museum. I shall at the same time report to them the wishes of the Trustees of the Australian Museum, Sydney, in regard to specimens for that Museum, notified to me by Mr. Krefft. In the meanwhile I beg to repeat the deep sense which I entertain of the service to science rendered by Dr. Thomson and Mr. Krefft, in their very able reports and explorations, and my obligations for the valuable materials so contributed towards the History of the Fossil Mammals of Australia, to which I am applying all the leisure at my command.

I have, &c.,
RICHARD OWEN.

The Principal Librarian, British Museum, to The Colonial Secretary, New South Wales.

Sir, British Museum, 22 October, 1870.

The Trustees of the British Museum have under their consideration a report from Professor Owen, the Superintendent of the Departments of Natural History in this Museum, announcing the present to the Trustees, by the Government of New South Wales, of 2,100 specimens of fossil remains, being duplicates of those in the Australian Museum, and discovered with them during explorations commenced in 1838 by the Surveyor-General, Sir Thomas Mitchell, C.B., in the limestone caves, Wellington Valley, Australia, to assist which the Parliament had voted funds, on condition that the duplicate specimens discovered should be transmitted to the British Museum.

I am directed by the Trustees of the British Museum to request that you will be so good as to convey to the Government of New South Wales their special thanks for this interesting and valuable addition to the Museum collections, and I am to express the sense which the Trustees entertain of the liberal manner in which the condition annexed to the vote granted towards the expense of the explorations has been carried into effect by the Trustees of the Australian Museum.

The Trustees of the British Museum have most readily acceded to the request made to them, on behalf of the Trustees of the Australian Museum, for a series of casts composing the skeleton of the Megatherium, and as soon as these casts shall have been prepared they will be transmitted to the Curator of the Australian Museum as a present from the Trustees of the British Museum to that institution.

I have, &c.,
J. WINTER JONES,
Principal Librarian.

The Principal Librarian, British Museum, to The Curator and Secretary, Australian Museum.

Sir, British Museum, 22 October, 1870.

With reference to your letter of the 14th of June, I beg to acquaint you that the Trustees have received a report from Professor Owen, of the present to the National Collections, by the Government of New South Wales, of 2,100 specimens of fossil remains, being duplicate specimens discovered during researches commenced in 1838, by the Surveyor-General, Sir Thomas Mitchell, C.B., in the limestone caves of Wellington Valley, Australia. This valuable addition to the Museum collection has been duly acknowledged with special thanks by the Trustees, who have at the same time expressed to the Chief Secretary

Secretary of the Government of New South Wales their sense of the liberality exhibited by the Trustees of the Australian Museum in the selection of the specimens which have been forwarded to the British Museum.

The Trustees have most readily acceded to the request made to them on behalf of the Trustees of the Australian Museum, for a series of the casts composing the skeleton of the megatherium, and as soon as these casts shall have been prepared and carefully packed they will be forwarded to you as a present from the Trustees of the British Museum to the Trustees of the Australian Museum.

I will write to advise you so soon as the casts shall have been transmitted to Sydney.

I have, &c.,
J. WINTER JONES,
Principal Librarian.

The Principal Under-Secretary to The Curator, Australian Museum.

Sir, Sydney, 29 November, 1870.

Referring to previous correspondence relative to the recent exploration of the Wellington Limestone Caves, I am now directed by the Colonial Secretary to enclose, for the information of the Trustees of the Australian Museum, a copy of a further letter of thanks from Professor Owen.

I have, &c.,
HENRY HALLORAN.

EXTRACT from Minutes of the Trustees of the Museum.

5 January, 1871.

A letter was read from the Principal Librarian of the British Museum thanking the Board, on behalf of the British Museum Trustees, for the 2,100 specimens of fossil remains presented to the British Museum, and informing the Board of Trustees that the British Museum authorities have most readily acceded to the request made to them, on behalf of the Australian Museum, for a series of casts comprising the skeleton of the megatherium.

The Principal Under-Secretary to The Trustees, Australian Museum.

Gentlemen, Sydney, 7 January, 1871.

I am directed by the Colonial Secretary to enclose, for your information, copy of a letter from the Principal Librarian of the British Museum, giving expression to the sense which the Trustees of that institution entertain of the liberal manner in which you have carried into effect the intentions of the Government with regard to the transmission to the British Museum of duplicate specimens of the fossil remains discovered during the explorations of the limestone caves of Wellington Valley.

2nd. It is also intimated, as you will observe, that a series of casts, comprising the skeleton of the megatherium, will, as soon as they shall have been prepared, be forwarded as a present to the Australian Museum from the Trustees of the British Museum.

I have, &c.,
HENRY HALLORAN.

The Curator and Secretary, Australian Museum, to The Principal Under-Secretary.

Sir, Australian Museum, Sydney, January 24, 1871.

I have the honor to inform you that a series of casts of fossil remains from the caves of Wellington and other localities have been prepared and packed for transmission to Professor Owen. The casts have been carefully coloured in imitation of the original specimens, from which they cannot be distinguished except by weight.

It may be desirable to exhibit these casts at the forthcoming Exhibition in England, and Professor Owen has been requested to hand them over for that purpose to the Commissioners. It is necessary that Professor Owen should have an opportunity to examine the specimens, for the purpose of naming those objects which it was impossible for me to determine with certainty.

I have, &c.,
GERARD KREFFT,
Curator and Secretary.

The Principal Under-Secretary to The Trustees, Australian Museum.

Gentlemen, Sydney, 21 April, 1871.

Referring to my letter of the 7th January last, I am now directed by the Colonial Secretary to forward herewith copy of a letter which has been received from the Principal Librarian of the British Museum, and in which it is intimated that the series of casts composing the skeleton of the megatherium, as previously promised, has now been completed, and placed on board the "Christiana Thomson" for transmission to the Australian Museum.

2nd. From the postscript to Mr. Jones' letter it will be observed that any packages intended for the British Museum should be addressed to "The Principal Librarian, British Museum, London," and not otherwise.

I have, &c.,
HENRY HALLORAN.

The Principal Librarian, British Museum, London, to The Principal Under-Secretary.

Sir, British Museum, 30 January, 1871.

With reference to the two last paragraphs in my letter to you of the 22nd of October, 1870, I beg to acquaint you that the series of casts composing the skeleton of the megatherium having been completed, have been carefully packed by the Museum formatore in five cases, and have this day been placed on board the "Christiana Thomson," now lying at the East India Docks, for transmission to your Museum. Mr. W. C. Mayne, of No. 8, Adam-street, Adelphi, the Agent-General for New South Wales, has kindly made all the arrangements necessary for forwarding these casts to you in the above-named vessel.

The

The cases are marked 1–5, and the contents of each are as follows:—

Case No. 1.—The pelvis and fourteen spine bones (marked alphabetically).
„ No. 2.—All the right and left ribs marked R 1, 2, 3, &c.; L 1, 2, 3, &c.; two fore legs.
„ No. 3.—Two small boxes containing hind paws, lower jaw, and two shoulder-blades.
„ No. 4.—Two hind legs, eleven spine bones, and skull.
„ No. 5.—Tail bones marked T 1, 2, 3, &c., and a small box containing the upper jaw.

I have, &c.,
J. WINTER JONES,
Principal Librarian.

P.S.—It is very important that any packages intended for the British Museum should be addressed "The Principal Librarian, British Museum, London," and not otherwise.

EXTRACT from Minutes of the Trustees of the Museum.

2 March, 1871.

A LETTER was read from the Honorable the Colonial Secretary, transmitting copy of a letter from the Principal Librarian of the British Museum, giving expression to the sense which the Trustees of that Institution entertain of the liberal manner in which the Trustees had carried into effect the intentions of the Government with regard to transmission to the British Museum of duplicate specimens of the fossil remains discovered during the exploration of the limestone caves of Wellington Valley.

The Principal Under-Secretary to The Trustees, Australian Museum.

Gentlemen, Sydney, 13 June, 1871.

With reference to correspondence respecting the fossil remains obtained from the Wellington Valley caves, of which specimens and photographs were sent to Professor Owen, of the British Museum, I am now directed by the Colonial Secretary to transmit herewith a printed sheet from the proceedings of the Royal Society, which has been received from Professor Owen, containing an abstract of a paper by that gentleman on the fossil mammals of Australia.

I have, &c.,
HENRY HALLORAN.

The Principal Librarian, British Museum, London, to The Secretary, Australian Museum.

Sir, British Museum, 26 June, 1871.

I am directed by the Trustees of the British Museum to acknowledge the receipt of the casts mentioned below, which the Committee of the Sydney Museum has been so good as to present to them; and I am to request that you will convey to the Committee of the Museum the expression of the best thanks of the Trustees of the British Museum for this donation.

I have, &c.,
J. WINTER JONES,
Principal Librarian.

A series of casts of remains of marsupial animals from the Wellington Caves.

The Curator, Australian Museum, to The Minister of Justice, &c.

Sir, Australian Museum, Sydney, 1 August, 1876.

I have the honor to draw your attention to the enclosed paragraph, cut from this day's issue of the *Sydney Morning Herald*, and in order that such valuable discoveries may not be lost to science, I have the honor to request that you will be good enough to take into consideration the necessity of taking immediate steps to prevent pillaging or disturbing of such deposits by the public, or any persons not authorised by the Government or Museum authorities to remove specimens therefrom.

I would therefore further request that the Police authorities be instructed to take such steps as may be thought necessary in the meantime to protect the deposits in these caves, and to prevent the removal of specimens therefrom until competent persons be sent from the Museum to explore and collect such as may be required for this Institution.

I have, &c.,
E. PIERSON RAMSAY,
Curator.

EXTRACTS from Minutes of a Meeting of the Trustees, Australian Museum.

Thursday, 3 August, 1876.

MR. MACLEAY stated that a paragraph had appeared in the daily journals in reference to the discovery of caves near Cowra containing deposits of bones. The Curator had already communicated with the Government, requesting them to take means for the protection of the bones, but he thought it desirable that the Board should make a formal application in reference to the matter.

The Chairman suggested that the Curator and H. Barnes be at once despatched to the caves.

Mr. Macleay moved that a letter be sent to the Minister of Justice requesting that steps may be taken for the preservation of the deposits until properly qualified persons are appointed to collect and classify the fossil remains. Also, that the Trustees recommend that Professor Liversidge and Mr. C. S. Wilkinson be appointed to superintend the work of collection and excavation.

It was also moved that Mr. Hill and Professor Liversidge be a deputation to wait upon the Minister to point out to him the necessity for immediate action being taken. Motion withdrawn.

The

The Acting Secretary, Australian Museum, to The Under Secretary of Justice, &c.

Sir, Australian Museum, Sydney, 3 August, 1876.

I have the honor, by direction of the Trustees of the Australian Museum, to invite the attention of the Minister for Justice and Public Instruction to the following resolutions passed at the meeting of Trustees held this day:—

That this Board having been informed of the discovery of limestone caves in the Cowra District, containing valuable deposits of fossil bones, request that such steps may be taken by the Government as shall entirely prevent any person from interfering with or in any way disturbing the said deposits, until duly qualified persons are appointed to collect and classify the fossil remains.

The Trustees further beg to recommend that Professor Liversidge and Chas. Smith Wilkinson, Esq., be appointed to superintend the work of collection and excavation.

The manner in which valuable deposits of a similar character previously discovered have been pillaged and destroyed renders it a matter of urgent importance in the consideration of the Trustees that prompt steps should be taken to prevent a recurrence of such conduct in the present case.

I have, &c.,
E. W. PALMER,
Acting Secretary.

The Under Secretary of Justice, &c., to The Acting Secretary, Australian Museum.

Sir, Department of Justice and Public Instruction, Sydney, 11 September, 1876.

With reference to your letter of 3rd ultimo, respecting discovery of certain limestone caves in the Cowra District, I am directed by the Minister of Justice and Public Instruction to forward herewith, for the information of the Trustees, copy of report which has been obtained from the police authorities in the matter.

I have, &c.,
W. E. PLUNKETT,
Under-Secretary.

[*Enclosure.*]

Report of Police on Caves near Canowindra.

Re caves discovered near Canowindra.

Police Station, Cowra, 15 August, 1876.

Senior-constable M'Cartie reports, for the information of Mr. Superintendent Lydiard, that on the morning of the 13th he started in company with Mr. Kendall (Lands Department) to the newly-discovered caves which are situated on the Licking-place Creek, being 4 miles south-east from Mr. Rothery's, 14 miles west from Canowindra, and about 4 miles north from the Belubula River. The country for miles around these caves is of limestone formation, and caves of different dimensions occur throughout.

The caves that Mr. Kendall went to see are not much, merely consisting of a number of undefined caverns, with very few stalactites.

In a smaller cave close to the above were found a quantity of fossil of the bones of some animals, which the Senior-constable believes to be those of a kangaroo or some animal of that size. These caves are nothing in comparison to the Fish River or even the Grove Creek Caves. The land on which these caves are situated belongs to Belubula Copper-mining Company, they having purchased two sections from Mr. Icely.

The report which appeared in the paper about these caves was very much exaggerated as the Senior-constable considers them not worth seeing.

DENIS M'CARTIE,
Senior-constable.

The Inspector-General might like to see this; I believe there has been a great deal written and said about these wonderful caves. I have lately been in the locality and did not hear one word about them.—C. T. P. Lydiard, Superintendent, 17/8/76.

Extract from Minutes of The Trustees of the Museum.

Thursday, 5 October, 1876.

A letter of date 11th September from the Department of Justice, covering the report of the Police on the caves near Cowra, was read, and the Secretary was instructed to return the thanks of the Board for the information.

The Acting-Secretary, Australian Museum, to The Under-Secretary of Justice, &c.

Sir, Australian Museum, Sydney, 9 October, 1876.

I have the honor to acknowledge receipt of your letter of 11th September, forwarding the report of the police authorities in reference to the caves near Cowra, which has been laid before the Trustees, by whom I am directed to thank you for the information.

I have, &c.,
E. W. PALMER,
Acting Secretary.

The Agent-General to The Colonial Secretary.

Sir, London, 3, Westminster Chambers, Victoria-street, S.W., 4 May, 1876.

I have the honor to forward herewith, for your consideration, a copy of a minute which I have written in recommendation of expenditure for certain scientific purposes set forth therein.

I have, &c.,
WILLIAM FORSTER.

Letters to be prepared asking neighbouring Colonies whether or not they are willing to aid.—John R., 25/9/76.

In

In recommendation of expenditure for certain Scientific purposes.

In a late conversation with Professor Owen and Sir George Macleay the two subjects specified below were discussed, with a view towards obtaining from the Government and Parliament of New South Wales a grant or grants of money to be expended as follows:—

1. In exploring certain caves in the Western and Southern districts, which have been ascertained to contain valuable fossil deposits, including particularly the fossil bones of extinct animals, some peculiar to the Australian continent.

2. In endeavouring to obtain the co-operation of the neighbouring Governments, but particularly the Government of Queensland, and, with this co-operation, in exploring the Australian rivers, and collecting therefrom specimens of Australian fish, many of which are known to be peculiar to the Australian continent, and more closely allied to extinct forms than to existing genera and species. I have great pleasure in recommending the proposal to the favourable consideration of the Government.

W.F.

The Chief Secretary, South Australia, to The Colonial Secretary, New South Wales.

Sir, South Australia, Chief Secretary's Office, Adelaide, 17 October, 1876.

With reference to your letter of the 29th ultimo, transmitting a recommendation of the Agent-General of New South Wales in London that, in the interests of science, a grant should be made for exploring the caves in the Western and Southern districts of this continent for fossil deposits, and the Australian rivers for a collection of fish known to be peculiar to those waters, I have the honor to inform you that this Government will gladly contribute towards the expenses of such exploration, upon the basis of population, or any other equitable principle, provided the examination be extended to the Mount Gambier caves of this province, which possess interesting geological features, and also to the Northern Territory of South Australia, which is reported to contain shells and other specimens unknown to scientific men.

I have, &c.,
HENRY AYERS.

The Colonial Secretary, Tasmania, to The Colonial Secretary, New South Wales.

Sir, Colonial Secretary's Office, Hobart Town, 18 October, 1876.

I have the honor to acknowledge the receipt of a letter from your office, but not signed, of the 29th ultimo, enclosing copy of a minute written by the Agent-General of New South Wales in London, in recommendation of an expenditure for certain scientific purposes, and requesting to be nformed if this Government is willing to aid in the attainment of the objects indicated.

It would appear from the minute that these objects specially refer to the exploration of certain caves in your Colony, and the examination of the rivers of Australia, particularly those of Queensland.

While fully appreciating the value of a scientific exploration of the caves referred to, and the rivers of the Australian continent, this Government is not prepared to recommend to Parliament an expenditure which would so indirectly affect Tasmania.

Should, however, any such investigation extend to the rivers of this Colony, I should be happy to give the gentlemen engaged any information and assistance it may be in my power to afford.

I have, &c.,
THO. REIBEY.

The Chief Secretary, Victoria, to The Colonial Secretary, New South Wales.

Sir, Victoria. Chief Secretary's Office, Melbourne, 20 October, 1876.

In reply to your letter of the 29th of September last, enclosing a copy of a minute by the Agent-General of New South Wales in London, recommending that the Colonies should co-operate in certain scientific explorations in the Western and Southern districts of Australia, I regret to state that this Government does not see the propriety of joining in the expenditure.

I have, &c.,
JOHN A. MACPHERSON.

The Colonial Secretary, Queensland, to The Colonial Secretary, New South Wales.

Sir, Colonial Secretary's Office, Brisbane, 30 October, 1876.

I have the honor to acknowledge the receipt of your letter of 29th ultimo, transmitting a copy of a minute written by the Agent-General of your colony in London in recommendation of expenditure for certain scientific purposes, in which the co-operation of Queensland is sought; and whilst intimating the readiness of this Government to co-operate in any matured scheme for scientific investigation, I should be glad if you would favour me with some more precise information as to the manner in which it is proposed to carry out the objects indicated in the minute, and the probable amount of expenditure required for the purpose, towards which this colony is asked to contribute.

I have, &c.,
R. M. STEWART.

It could not have been determined by this Government what course should be followed without first knowing what Colonies would join in the matter.—John R.

The Colonial Secretary, New Zealand, to The Colonial Secretary, New South Wales.

Sir, Colonial Secretary's Office, Wellington, 2 November, 1876.

I have the honor to acknowledge the receipt of your letter, No. 529, of the 29th September, in which you transmitted copy of a minute by the Agent-General of New South Wales in London in recommendation of expenditure for exploring caves in the Western and Southern districts, and for exploring the Australian rivers and collecting therefrom specimens of Australian fish.

In reply, I have to express the regret of this Government that they are not in a position to afford any assistance towards making the proposed explorations, as they have no funds at their disposal applicable to such a purpose.

I have, &c.,
DANIEL POLLEN.

Telegram

Telegram from Acting Colonial Secretary, Western Australia, to The Colonial Secretary, New South Wales.

Albany, 27 December, 1876.

LEGISLATIVE Council not being in session an answer cannot at present be given to your despatch of 29 September.

A. O'GRADY LEFROY,
Acting Col. Secretary.

None of the Colonies have unconditionally concurred (almost all decline) in the proposal of the exploration of caves in New South Wales and Australian rivers. It remains for New South Wales to determine whether she will do it single-handed, or with the conditions proposed, or merely decline, for the present, on reference to the replies received. 15/1/77.

I think New South Wales ought to make provision without the aid of the other Colonies.—JOHN R., 17/3/77. The amount necessary to be placed on Estimates is needed. Will the Under-Secretary of Justice, &c., please ascertain, B.C., 21/3/77.—H.H.

Exploration of Caves and Rivers, &c., for Fossil Remains and for specimens of Fish.

AT the instance of the Agent-General in London, a communication was forwarded from the Colonial Secretary's Department to each of the neighbouring Colonies, asking their co-operation in exploring certain caves which are supposed to contain valuable fossil deposits; also, in exploring Australian rivers for specimens of fish, &c. To this communication replies have been received to the following effect:—

Victoria does not see propriety of joining in the expenditure.

South Australia will be willing to join provided examination extends to caves at Mount Gambier.

Queensland requires more information before deciding.

New Zealand regrets it has no funds at disposal to assist.

Tasmania is unable to recommend any expenditure as the caves and rivers intended to explore are in Australia alone.

Western Australia cannot give an answer as Parliament is not in session.

Cabinet has decided that this Colony shall do the work without aid from other Colonies, and papers have been forwarded to this department in order that the amount required may be ascertained.—9/4/77. The Curator of the Museum might perhaps be in a position to state what would be required, and the probably outlay, for the purpose.—F.B.S., 9 April, 1877. The Curator of the Museum, B.C., 14 April, 1877.

W. E. PLUNKETT.

EXTRACT from Minutes of the Trustees of the Museum, Thursday, 3 May, 1877.

The Curator laid before the Trustees correspondence and documents forwarded to him by the Minister of Justice in reference to caves and rivers in Australia. It was understood that the proposition originated with the Agent-General for New South Wales, Professor Owen, and Sir George Macleay, and that the other Colonies having virtually declined to participate in the exploration, this Government were disposed to carry it out, and had applied to the Curator for an estimate of the cost.

The Curator, Australian Museum, to The Minister of Justice, &c.

Sir,

Australian Museum, Sydney, 8 May, 1877.

I have the honor to acknowledge the receipt of your communication of the 14th of April last respecting the probable outlay required to explore caves and rivers in Australia for fossil bones and fishes.

Before the rivers and caves to be explored be determined upon it would be impossible to give other than an approximate to the cost of such an expedition; but in any case the "first cost" or "outfit, &c.," such as I have the honor to forward herewith, would be about the same. I do not think that any satisfactory work could be done under a period of six months, unless it be in some district close at hand; and in order to have the exploration effectually performed, an experienced and trustworthy person should be sent in charge of each party. The amount of spirits of wine required would of course depend on the success of the fishing party.

I have, &c.,
EDWARD P. RAMSAY,
Curator.

This may be brought under consideration when preparing further additional Estimates.—F.B.S. 16/5/77.

Estimate of expenses or outlay for exploring caves and rivers, for fossil remains and fishes:—

Exploration I.—Caves for 6 months	£251	10	0
Superintendent in charge of party.			
Do. II.—Rivers, &c., for 6 months	339	0	0
Superintendent in charge of party.			
For the exploration of the western waters in Queensland, additional	100	0	0

EDWARD P. RAMSAY,
Curator.

8/5/77.

Details of estimate of expenses I—Exploration of caves for fossil remains, &c.:—

Outfit.—Shovels, picks, hammers, "gads," and prospecting tools, about	£4	10	0
Two tents, with "flies," &c., and camp utensils	12	0	0
Lights, per month, 20s., 6 months	6	0	0
A spring-cart and tilt	16	0	0
Two good horses	30	0	0
Harness, &c.	10	0	0
Sundry expenses, say	5	0	0
Wages for three men, 6 months, 1 at 60s., 2 at 40s. per week	168	0	0
Total	£251	10	0

Some trustworthy person, who understands such excavations, should accompany the expedition.

EDWARD P. RAMSAY,
Curator.

8/5/77.

Details

Details of estimate of expenses II—Exploration of rivers, lakes, and lagoons, for fishes, &c. :—

Fishing party.

Outfit.—Large seine, complete and mounted, ready for use	£30	0	0
A small meshing net, complete	20	0	0
Fish-traps, three or more, for lagoons and waterholes, which cannot be netted	10	0	0
Hooks, lines, fishing gear, and sundries	5	0	0
Strong whale-boat, complete with oars, sails, &c.	40	0	0
A light skiff for shallow rivers, &c.	10	0	0
Two tents with "flies," &c., and camp utensils, &c.	14	0	0
Salt, and hogsheads for specimens	2	0	0
*Spirits of wine, 100 galls.	40	0	0
	£171	0	0
Wages for experienced boatman, at 60s. per week, for 6 months ...	72	0	0
2 men at 40s. per week	96	0	0
	£168	0	0
Total	£339	0	0

To explore the Western waters a sum of at least £100 to be added.

* This might be obtained duty free and thereby lessen the cost considerably (say to £25 or £30).

E. P. RAMSAY,
Curator.

The Secretary, Australian Museum, to R. A. Stace, Esq.

Sir, The Australian Museum, Sydney, 9 June, 1879.

I have the honor to inform you that your letter, recommending the appointment of George Proctor as caretaker of the Wellington Caves, has been submitted to the Trustees.

The Trustees desire me to inform you that they have no authority to make an appointment such as that which you recommend, but they have forwarded your letter of the 6th May to the Honorable the Minister of Justice and Public Instruction. I have, &c.,

CHARLES ROBINSON,
Secretary.

The Secretary, Australian Museum, to The Under Secretary of Justice, &c.

Sir, The Australian Museum, Sydney, 9 June, 1879.

I have the honor to enclose, for the information of the Honorable the Minister of Justice and Public Instruction, a letter which has been addressed to the Trustees on the subject of the preservation of the Wellington Caves, by Mr. Robert A. Stace. I have, &c.,

CHARLES ROBINSON,
Secretary.

A. Liversidge, Esq., to The Colonial Secretary.

Sir, The University, Sydney, 11 July, 1879.

The well known liberality of your Government in all matters relating to public instruction and advancement of scientific knowledge emboldens me to draw your attention to an extract from a letter which I have lately received from Professor Boyd-Dawkins, M.A., F.R.S., of Owens' College, Manchester, upon the desirability of further exploring the various interesting caves in this colony. I need, perhaps, hardly mention that Professor Dawkins has paid great attention to the systematic explorations of caves, and he has devoted many years of his life to the study of the deposits found therein, and that in consequence he is recognized as one of the greatest authorities upon the subject; hence I do not hesitate to respectfully beg your favourable consideration of the suggestions contained in his letter.

The extract is as follows:—

"Would the Government of New South Wales undertake the systematic exploration of the wonderful caves which are in the colony, and which certainly ought to be explored. Not only is there a certainty of adding to the great marsupials which have been obtained, but there is a great chance of finding proof that man was living at the same time as the extinct animals, as he has already been found in Europe and Asia. I should expect to find a very low form of the aborigine.

"Such an inquiry would be of very great interest to us here in England who are digging at the caves all over Europe, and the duplication which would be obtained would enable the Trustees of the Australian Museum to increase their collections largely by exchanges."

Professor Boyd-Dawkins is, of course, aware of the assistance which the New South Wales Government has already given to such explorations. I have, &c.,

ARCHIBALD LIVERSIDGE.

1881.—Extracts from Minutes of the Meetings of the Trustees, Australian Museum.

Tuesday, 7th June, 1881.

It was resolved, on the motion of Professor Liversidge,—"That a committee, consisting of Dr. Cox, Mr. Wilkinson, and the mover, be appointed for the management of the exploration of caves and rivers, with power to take all necessary steps for the expenditure of the money voted for that purpose."

Tuesday,

Tuesday, 21*st June*, 1881.

On the motion of Professor Liversidge, it was resolved,—"That application be made to the Government for a copy of all correspondence on the subject of the exploration of caves and rivers for the guidance of the Committee, such correspondence to commence from the year 1870, with a printed report, including a letter from Professor Owen."

Tuesday, 5*th July*, 1881.

A letter, dated 21st June, 1881, to the Department of Public Instruction, was read, asking for a copy of all correspondence *re* the exploration of caves and rivers since 1870. The secretary reported that a printed copy of a portion of the correspondence had been received; he was then instructed to make a further application for the remainder.

Tuesday, 3*rd January*, 1882.

The Secretary reported that Mr. Jenkins had not returned any of his camp fittings, tools, &c., or supplied necessary information concerning railway passes. The Secretary was instructed to write to Mr. Jenkins, the letter to be registered, requesting his immediate attention to these matters, to avoid any further trouble or proceedings.

Tuesday, 7*th March*, 1882.

A report from the Committee on Caves and Rivers was adopted and agreed to be carried out.

1881–82.—Copies of Minutes of the Proceedings of the Committee appointed to manage the Exploration of Caves and Rivers.

Tuesday, 14 *June*, 1881.

Present:—Dr. Cox (in the Chair), Mr. Wilkinson, Professor Liversidge.

The Secretary read a telegram from Mr. Jenkins, of North Yass, offering his services. To be acknowledged. A letter from the Curator was also read.

It was decided that the following caves should, if possible, be examined in the order as written:—

1. Wellington Caves.
2. Cowra, or Belubula Caves.
3. Abercrombie.
4. Wollombi.
5. Fish River.
6. Wombean.
7. Wallerawang.
8. Cargo.
9. Yarrangobilly.
10. Murrumbidgee.
11. Kempsey.

The Secretary was instructed to tell Henry Barnes to hold himself in readiness to proceed to Wellington, and to submit a list of all tools, appliances, and camping gear which he would require.

It was decided to engage Mr. Sibbald and his son at a rate of wages of 8s. and 5s. per day respectively, to assist Barnes in his work.

(*a*) The Secretary was instructed to purchase Boyd-Dawkin's work on "Cave Hunting."
(*b*) To inform the Curator of the result of the meeting, and to ask him to report on the subject of river exploring, submitting a list of requirements and probable expenditure.
(*c*) To ascertain if more than the sum of £300 could be spent on the exploration of caves alone.
(*d*) To write to the Wellington Municipal Council and ask if they have any objection to the proposed exploration.
(*e*) To ascertain what has become of the eighteen plates of fossils mentioned in the annual report for 1872.

The Secretary reported that he had applied to the Department of Mines, through the Minister of Public Instruction, for permission to explore the caves.

It was agreed to meet, until further notice, on each Tuesday afternoon.

21 June, 1881. JAMES C. COX.

Tuesday, 21 *June*, 1881.

Present:—Dr. Cox (in the Chair), Professor Liversidge.

THE minutes of the previous meeting were read, confirmed, and signed.

Letters were read from Mr. Sibbald, accepting the terms offered by the Trustees for his services; from the Mayor of Wellington, granting permission to explore the caves; from Mr. Jenkins, offering his services. The latter was referred to Mr. Wilkinson.

The following list of articles required was submitted and approved:—2 picks and shovels, 1 crowbar, 2 hammers, 10 lbs. nails, 1 axe, 1 tomahawk, 1 adze, 1 hand-saw, 1 magnesium lamp and wire, 4 dozen dry plates, 2 sieves, 60 feet 1 in. rope, 2 blocks, 10 lbs. brown paper, 10 lbs. soft paper, 6 dozen seidlitz-boxes, 6 dozen glass tubes, 3 small brushes, 500 tin labels, 10 lbs. blasting powder, 4 drills, 6 steel gads, 1 fryingpan, 1 billy, 2 pint-pots, 6 balls twine, 3 lanterns, 3 pairs blankets, 1 waterproof rug, 1 macintosh rug, 1 pair leggings, 10 lbs. sperm candles 2 knives, fuse, buckets, 1 small tent and pole, 1 oz. magnesium wire, 3 tin plates.

JAMES C. COX,
Chairman.

19th July, 1881.

Tuesday,

Tuesday, 19 *July*, 1881.

Present:—

Dr. Cox (in the Chair), Professor Liversidge, Mr. Wilkinson.

MINUTES.—The minutes of the previous meeting were read, confirmed, and signed.

Correspondence.—25/6/81, 11/7/81, 3/7/81.—From Mr. Radcliff, *re* caves, near Maryborough, read, and consideration deferred. 6/7/81, 18/7/81.—From Mr. Sibbald. It was agreed that Mr. Sibbald should arrange with his son-in-law to work instead of his son, at wages to be arranged. 29/6/81.—From the Department of Public Instruction, forwarding a printed copy of correspondence *re* caves. Read. 8/7/81.—From the Department of Mines, granting permission to make explorations. Read. It was agreed that duplicate specimens obtained should be presented to the Department of Mines. 14/6/81, 20/6/81.—From C. Jenkins. It was agreed to offer him £4 per week for three months, and travelling expenses by coach; to ask him which caves he can first explore. Mr. Jenkins to be allowed the services of two men at 8/- per day each to do the manual labour, so as to ascertain if bones or fossils of any kind exist. An allowance was made to H. Barnes of £1 per week, in addition to his usual salary, to pay all his expenses.

A report from the Curator, *re* the exploration of rivers, was read.

It was decided to apply to the Queensland Government for maps of the rivers of Queensland, and for other assistance to collectors in searching for ganoid fishes.

20 September, 1881. JAMES C. COX.

Tuesday, 20 *September*, 1881.

Present:—Dr. Cox (in the Chair), Professor Liversidge.

MINUTES.—The Minutes of the previous meeting were read and signed as correct.

Correspondence.—19 August, 1881.—From the Department of Public Instruction, stating that every facility will be afforded by the Harbours and Rivers Department in any explorations undertaken by the Trustees.

Letters of the following dates from Mr. Jenkins were laid on the table, viz.:—12th August, 1881, 25th August, 1881, 28th August, 1881, 2nd September, 1881, 6th September, 1881, 16th September, 1881.

A report from the Curator on the work done in exploring the Wellington Caves was read.

It was resolved, "That on the arrival of the box of bones from Mr. Jenkins, the Curator should report as to their value to the Committee, for the purpose of receiving further instructions.

"That the Committee wait upon Sir John Robertson for the purpose of ascertaining if the Government object to the exploration of rivers in Queensland.

"That the Secretary should again ask at the office of the Department of Public Instruction for a copy of the correspondence subsequent to 1870, which had already been applied for.

"That Morton should proceed immediately to the heads of the Richmond and Tweed Rivers, for the purpose of exploring them. That he should be allowed £1 per week for himself, and to engage a man at a salary not exceeding £3 per week, and £1 per week for allowances. All travelling expenses to be paid in addition."

A cheque for £20 was signed.

JAMES C. COX,
Chairman.

18 October, 1881.

Monday, 14 November, 1881.

Present:—Dr. Cox (in the Chair), Professor Liversidge.

Correspondence—

From Mr. Jenkins, letters of 20th September, 24th September, 25th September, 10th, 18th, 28th October, and a telegram of the 12th November, were laid on the table.

It was decided to discontinue Mr. Jenkins' services after 23rd inst., the Secretary to telegraph to him at once to send his reports, specimens, and accounts, and to await instructions before proceeding to Cowra.

From H. Barnes, 28th September, 1881, a report of proceedings was read.

21st October, 1881.—From the Curator to the Chairman of the Committee, recommending the removal of Mr. Jenkins to Cowra, was read and approved.

5th November, 1881.—From the Department of Public Instruction, asking for information of copies of letters, &c., *re* the exploration of caves and rivers.

The Secretary was instructed to prepare copies of all such correspondence, &c.

It was resolved that all persons employed by the Committee for the exploration of caves and rivers shall send weekly to the Committee a full report of their proceedings.

The Secretary was instructed to communicate by telegraph with Morton to this effect, and request him to furnish a report of his proceedings to date without delay.

JAMES C. COX,
Chairman.

3rd March, 1882.

Friday, 3rd March, 1882.

Present:—Dr. Cox (in the Chair), Professor Liversidge, Mr. Wilkinson.

Correspondence—

Letters from Mr. Jenkins, dated — October, 1881; 21st November, 1881; 6th December, 1881; 6th December, 1881; and 5th January, 1881, were read. In reply to the second letter of 6th December, 1881, the Secretary was instructed to inform Mr. Jenkins that skeletons of aboriginals were not required.

Reports from A. Morton, *re* the exploration of the Richmond River, dated November, 1881; 15th November, 1881; 22nd November, 1881; and 30th November, 1881, were read.

A telegram from A. Morton, of 8th December, 1881, asking if he should proceed to the Tweed River, was read, and the Curator reported that he had recalled Morton.

Letters from A. Morton, of 31st December, 1881, and 6th February, 1882, applying for a sum of £10 (ten pounds) were read, and it was decided to recommend the Board of Trustees to grant the sum to reimburse Morton for expenses incurred by him on behalf of the Museum. It

It was agreed to ask the Board of Trustees to place the sum of £600, voted by Parliament for the exploration of caves and rivers in 1882, at the disposal of the Committee.

It was agreed that the meetings of the Committee should be held on the third Tuesday in each month, at 3·30 p.m.

An application from the Curator of 3rd March, 1882, for a trawl net, was approved, the Curator to endeavour to obtain the sanction of the Board to its purchase for the collection of specimens.

It was agreed to expend a sum not exceeding £10 (ten pounds) in repairs and alterations to the boat.

It was agreed that A. Morton should proceed in a fortnight to the Burdekin River in Queensland; that his allowance for expenses should be twenty-five shillings per week; and that he be authorized to engage labour there.

Reports from the Curator of 31st December, 1881, *(a)* on the exploration of caves; *(b)* on the exploration of rivers, were received.

It was decided that a copy of all the correspondence, when printed, should be sent to each Member of the Committee.

On the recommendation of Mr. Wilkinson it was decided to explore the caves at Cowra, Mr. Wilkinson promising to report further particulars to the Committee.

It was decided that the plans of the caves at Wellington should be lithographed and published with the Report.

JAMES C. COX,
Chairman.

March 21st, 1882.

Report from the Committee appointed to conduct the Exploration of Caves and Rivers.

Gentlemen, Australian Museum, Sydney, 4 March, 1882.

We have the honor to recommend,—1st. That the sum of £10 (ten pounds) be granted to A. Morton, the Assistant Taxidermist, to reimburse him for expenses incurred during the exploration of the Richmond River; 2nd. That the sum of £600, voted by Parliament for 1882, for the exploration of caves and rivers, be placed at the disposal of this Committee, who shall, from time to time, report to the Board as to its disposal; 3rd. That a sum not exceeding £10 (ten pounds) be voted for repairs and alterations to the boat; 4th. That A. Morton be sent, in a fortnight, to explore the Burdekin River for fishes, with a weekly allowance of 25s. for his own expenses, and that he be authorized to engage in Queensland such labour as he may consider necessary.

JAMES C. COX,
Chairman.

To the Trustees of the Australian Museum.

Memo. from Professor Liversidge to The Secretary, Australian Museum.

Dear Sir, 8 June, 1881.

Will you please call a meeting of the Caves and Rivers Exploration Committee for Tuesday next, at 4 p.m.?

It will be desirable to provide copies of the printed reports relating to former work of this kind.

Will you also ask Mr. Wilkinson to place any information which the Mining Department may be ready to grant at the disposal of the Committee?

If we have not yet received any portion of the £600 I think it should be obtained at once.

It will probably save time if Mr. Wilkinson would kindly send in a memo. containing his views to the Committee by Tuesday.

I have, &c.,
A. LIVERSIDGE.

Memo. from C. S. Wilkinson, Esq., to The Secretary, Australian Museum.

Department of Mines, Sydney, 9 June, 1881.

In reference to your memo. of the 8th instant, I shall be most happy to give you all information that I can in furtherance of the exploration of caves, but it will be well first for the Committee to obtain from the Secretary for Mines the necessary authority to explore the caves.

I believe that the printed reports relating to the exploration of the Wellington caves can be obtained at the Government Printing Office.

C. S. WILKINSON.

The Secretary, Australian Museum, to The Under-Secretary of Public Instruction.

[Urgent.]

Sir, The Australian Museum, Sydney, 10 June, 1881.

I have the honor, on behalf of the Trustees of the Australian Museum, to inform you that they are about to take steps for the exploration of caves and rivers in New South Wales, a sum of money having been voted by Parliament this year for that purpose.

The Trustees will feel obliged if you will kindly obtain from the Secretary for Mines the necessary authority for such explorations, and any information on this subject which he may be kind enough to place at their disposal.

I have, &c.,
C. R. BUCKLAND,
Secretary.

The

The Under-Secretary of Public Instruction to The Secretary, Australian Museum.

Sir, Department of Public Instruction, Sydney, 17 June, 1881.

With reference to your letter, dated 10th instant, respecting the proposed explorations of caves and rivers in New South Wales, I am directed to acquaint you that this matter has been referred to the Department for Mines with a view to the necessary authority being given to the Trustees of the Australian Museum to enable them to carry out their researches.

I have, &c.,
W. WILKINS,
Under-Secretary.

The Curator, Australian Museum, to The Committee of Caves and Rivers Exploration.

Gentlemen, Exhibition Buildings, Melbourne, 11 June, 1881.

In connection with the exploration of caves, proposed to be carried out by the Trustees of our Museum, I have the honor to recommend, "That information be obtained as to the existence of certain unexplored caves adjacent to the old Wellington caves, or that search be made in that vicinity for such caves; many of our most important fossil bones have been obtained in that district. That the Cowra district should also be examined."

I do not think that any actual work should be commenced until after the winter is over, but in the meantime a great deal of useful information might be obtained from persons living in the districts referred to.

I trust to be in Sydney about Friday next, or sooner.

I have, &c.,
ED. P. RAMSAY,
Curator of the Australian Museum.

Telegram from Mr. C. Jenkins to Secretary for the Trustees, Sydney Museum.

Yass, 14 June, 1881.

Beg to offer services for exploration rivers and caves. Send formal letter to-night.

CHAS. JENKINS,
North Yass.

Mr. C. Jenkins to The Secretary, Australian Museum.

My dear Sir, North Yass, 14 June, 1881.

I beg to offer my services to the Trustees of the Museum for the exploration of rivers and caves.

I have been since 1859 a licensed surveyor, and am now a member of the New South Wales Institute of Surveyors.

For some years past I have been employed exploring the geology of Yass, as I have no doubt, from the two papers I contributed to the Linnean Society, many of the Trustees are aware.

My ability to sketch also adds, I think, to whatever other ability I may have for the work for which I have offered my services.

I have, &c.,
CHAS. JENKINS.

The Secretary, Australian Museum, to Mr. C. Jenkins.

Sir, The Australian Museum, Sydney, 15 June, 1881.

I have the honor, on behalf of the Trustees of the Australian Museum, to acknowledge the receipt of your telegram and letter of 14th instant, offering your services for the exploration of caves and rivers. In reply thereto I beg to inform you that your letter will be brought before the Committee at its next meeting on 21st instant.

In the meantime will you kindly state on what terms, and when you would be prepared to assist in this exploration.

I have, &c.,
CHARLES R. BUCKLAND,
Secretary.

The Secretary, Australian Museum, to C. S. Wilkinson, Esq.

Dear Sir, The Australian Museum, Sydney, 14 June, 1881.

Was the man Sibbald, when employed by you, paid at the rate of 8s. per day in addition to expenses for living, tools, camping materials, or what should he provide for himself?

Yours faithfully,
C. R. BUCKLAND,
Secretary.

Department of Mines, Sydney, 17 June, 1881.

James Sibbald found his own living, picks and shovels, and we provided candles, powder, fuse, &c. In the present instance he should find his own living out of his pay of 8s. per day, and the Museum find tents and all working tools and materials; otherwise there will be confusion as to ownership and repairs, &c. If he and Barnes live together at the caves, Sibbald should make his own arrangements for paying for his living, either by sharing living expenses with Barnes or by paying Barnes (say) 8s. or 10s. per week as his share.

C.S.W.

The

The Secretary, Australian Museum, to The Chairman, Municipal Council, Wellington.

[Urgent.]

Sir, The Australian Museum, Sydney, 15 June, 1881.

I have the honor, on behalf of the Trustees of the Australian Museum, to inform you that they propose to organize a party for the exploration of the Wellington Caves, a sum of money having been voted by Parliament for this purpose.

As the Trustees are informed that these caves are situated on the property of the Wellington Municipal Council, they desire me respectfully to request your permission to make such explorations as they may consider necessary.

It is proposed to start the expedition next week. I shall therefore feel obliged by receiving an early reply by post or telegraph.

I have, &c.,
CHARLES R. BUCKLAND,
Secretary.

R. Rygate, Esq., to The Secretary, Australian Museum.

Sir, Wellington, N.S.W., 17 June, 1881.

I have the honor to inform you that the Municipal Council of Wellington have much pleasure in complying with the request contained in your letter of the 15th instant respecting the exploration of the Wellington caves.

I have, &c.,
ROBERT RYGATE,
Mayor.

P.S.—I may mention that a conveyance belonging to Mrs. Hughes, of the "Royal Hotel," would if necessary meet you at the Railway Station and forward the party on to the caves. Her charges would no doubt be reasonable.—R.R.

The Secretary, Australian Museum, to R. Rygate, Esq.

Sir, The Australian Museum, Sydney, 21 June, 1881.

I have the honor, on behalf of the Trustees of the Australian Museum, to acknowledge the receipt of your letter of 17th inst., granting them permission to explore the caves at Wellington.

In reply thereto I beg to convey to you the expression of the thanks of the Trustees for your kindness, also for the information you have supplied concerning a conveyance.

The work of exploring will probably commence in a week or ten days.

I have, &c.,
CHARLES R. BUCKLAND,
Secretary.

The Secretary, Australian Museum, to Mr. J. Sibbald.

Sir, Australian Museum, Sydney, 15 June, 1881.

I have the honor, on behalf of the Trustees of the Australian Museum, to inform you that they proposed sending one or more persons for the purpose of exploring the Wellington caves; and on the recommendation of Mr. Wilkinson, of the Department of Mines, they are prepared to engage your services at a rate of wages of 8s. per day, and those of your son at the rate of 5s. per day, terminable at a day's notice, for the purpose of assisting anybody sent from the Museum under whose directions you would act.

The Trustees will find tents and all necessary tools and working materials, you providing your own food, &c. Any bones, fossils, or other specimens found by your son or yourself are to be the property of the Museum.

I shall feel obliged if you will kindly telegraph a reply at your earliest convenience, and in the event of your accepting this offer please to write a list of requirements which your experience may suggest.

Your engagement will probably commence next week.

I am, &c.,
CHARLES R. BUCKLAND,
Secretary.

Telegram from Mr. J. Sibbald, to Secretary, Australian Museum.

Wellington, 17 June, 1881.

ACCEPT your offer provided you supply candles.

JAS. SIBBALD.

Mr. J. Sibbald to The Secretary, Australian Museum.

Sir, Wellington, N.S.W., June 19, 1881.

I received your letter of the 15th. I had just come home from Dubbo, where I was repairing the telegraph line which I have worked at for the last ten years, but I don't think I will be required for a few weeks, so I can do what you require at the caves. With regard to tools I have, if required, plenty of rope, picks, a windlass, and a drill; if you wish to blast I have no powder but it can be procured here. We would require two or three gads and a five or six pound hammer as most of the soil is very hard. I can supply some buckets but I broke my shovel so we will require one. I have a pair of bellows and can sharpen the tools myself and we can get cases here to pack up anything in. The gads are made of steel; perhaps it would be better to have them made here if required. I don't know of anything else I could suggest. I send my thanks to Mr. Wilkinson and you for any work you can put in my way. I have been in Sydney since the 6th May for three weeks, and have to be down again on the 25th July. If I have time I wish to see some of you Trustees about a very good slate that will split well. I have not seen anything like it in the colony.

Yours respectfully,
JAMES SIBBALD.

P.S.—If you wish to blast get powder and fuse in Sydney.

Telegram from Curator, Australian Museum, to Mr. J. Sibbald.

Wellington, 8 July, 1881.

BARNES leaves Tuesday night; meet him at Station, Wednesday morning.

E. P. RAMSAY,
Curator of Australian Museum.

Mr. C. Jenkins to The Secretary, Australian Museum.

Sir, North Yass, 20 June, 1881.

Referring to your letter of the 15th, asking upon what terms and when I will be prepared to assist in the exploration of rivers and caves, I have the honor to state that I am prepared to commence at any moment the Trustees may desire.

With regard to the terms, until I know whether the Trustees intend to make the arrangement named, confine or not the exploration to a particular district, or the nature of the exploration as affecting expenses to be incurred, I cannot make a definite statement, but as I take a great interest in the proposed work I do not think the Trustees will propose anything that I will not willingly agree to.

I have, &c.,
CHAS. JENKINS.

The Secretary, Australian Museum, to The Under-Secretary, Department of Public Instruction.

[Urgent.]

Sir, Sydney, 21 June, 1881.

I have the honor, by direction of the Trustees of the Australian Museun, to inform you that they are anxious to obtain, as soon as possible, a copy of all correspondence which has taken place on the subject of the exploration of the caves and rivers since the year 1870, with a printed report, including a letter from Professor Owen to the Hon. the Colonial Secretary.

The Trustees are now taking active steps for the expenditure of the money voted by Parliament for the exploration of caves and rivers, and will be obliged if the Minister of Public Instruction will kindly cause the correspondence and report above mentioned to be obtained for their guidance.

I have, &c.,
CHARLES R. BUCKLAND,
Secretary.

The Under-Secretary, Department of Public Instruction, to The Secretary, Australian Museum.

Sir, Sydney, 29 June, 1881.

In accordance with the request contained in your letter dated 21st instant, I am directed by the Minister of Public Instruction to transmit herewith a copy of the correspondence on the subject of exploration of caves and rivers, &c., for the information of the Trustees of the Australian Museum.

I have, &c.,
W. WILKINS,
Under-Secretary.

Mr. S. E. Radcliff to The Curator, Australian Museum.

Sir, Ournie, Upper Murray, New South Wales, 25 June, 1881.

I have seen in the *Town and Country Journal* that the Trustees of the Museum are about to expend some money in the exploration of caves and rivers. I do not know if their operations extend to Queensland, but if they do the following might lead to something interesting :—

I lived on the Queensland coast (then a very wild place) in 1867, on a river called Nosa. The blacks had a story amongst them of a cave in a mountain which they called Muthaa (white man). They said there were several skeletons in the cave (I forget the exact number) and plenty of papers and instruments, such as are used by navigators and explorers; of the instruments they used to draw the figures in the sand.

There were only eight or ten white men in all that region at the time I was there (cedar-getters) and all knew the above story. When I left there, in April or May, 1867, the place was unexplored, and I have not heard anything of it since. If there are other points upon which I can give you any information I shall be most happy to do so.

I have, &c.,
S. E. RADCLIFF.

Mr. S. E. Radcliff to The Curator, Australian Museum.

Sir, Ournie, Upper Murray, New South Wales, 3 July, 1881.

In reply to yours of 30th ultimo, received this evening, I beg to state :—

1st. The situation of the cave is in a mountain called by the blacks Muthaa (meaning white man). The mountain is, as well as I can remember, in the northern watershed of King-king Creek, which creek runs into a large lake, from which lake the Noosa River flows. The nearest town would, perhaps, be Gympie; but when I was there there were no towns nearer than Maryborough on the north, and the outskirts of Brisbane on the south.

2nd. How to get there. A steamer leaves Brisbane, I believe twice a week, for Tewantin, a township on the Noosa River, occupying the site of the camp I lived in.

3rd. Could I undertake to find the cave? I could undertake to try to find the cave, but not for expenses alone. I am but a poor man and live by my labour, generally as manager of a crushing machine, but at present am mining on my own account. The country about Noosa is very scrubby and difficult to penetrate; one would require the guidance of a black, and unless the blacks are much more civilised than in my time it would be only safe to have a white companion for that part of the trip. The story of the cave was

quite

quite common amongst the whites and blacks, and the latter has a great superstitious dread of it; but none of the whites ever saw it, for three reasons: 1st. They could not afford the time. 2nd. The blacks were treacherous. 3rd. The country was so inaccessible.

Please do not let the matter become public yet as I would naturally like to have the credit of the discovery if there is any to be made.

I have, &c.,
S. E. RADCLIFF.

Mr. S. E. Radcliff to The Curator, Australian Museum.

Dear Sir, Ournie, Upper Murray, 11 July, 1881.

Yours of the 7th instant to hand last night. I have not heard of the cave since I was in that neighbourhood, in the end of April, 1867. I do not know the gentleman you mention, but I can give you the names of a few that I remember.

Walter Scott, an old man, formerly from this (Murray) river, timber-getter, lived at Tewantin; Henry Blakesley, sen., formerly, I believe, a commercial traveller, and not a very reliable character; Henry Blakesley, jun., Thomas Collins, George Knight: All these, except Scott, were in the employ, or in some way connected with Webb Bros. of Brisbane, who went insolvent at that time, and between the lot I lost three months' wages. There was another man named Thorn; some sort of a preacher—Bible Christian I think he called himself. He used to go to Brisbane pretty often, preach in the most saint-like manner, and on his return drive home all the stray horses he saw. He received his reward in H.M. Gaol, I believe; this was since I left. Now, I think you have all my information. I should like to have been employed in this search, but I suppose I am out of it now, to use a slang expression. If you require any reference, as to who or what I am, I think Mr. K. M'Lennan, of Albury, N.S.W., or Mr. James Day, of Albury, J.P., would vouch for me. I am also acquainted with Mr. James Walker, inspector of the Bank of New South Wales, residing in Brisbane.

I have, &c.,
S. E. RADCLIFF.

The Secretary, Australian Museum, to Professor Liversidge.

Dear Sir, The Australian Museum, Sydney, 26 June, 1881.

Barnes has applied for the following additional articles. Do you object to his having them?

Yours, &c.,
C. R. BUCKLAND.

One small tent and pole.
1 oz. magnesium wire.
Three tin plates.

I have no objection.—A.L., 26/6/81.

The Secretary, Australian Museum, to Dr. Cox.

Dear Sir, Australian Museum, Sydney, 26 June, 1881.

Barnes wants the following articles before starting for Wellington. Shall I get them?

Yours, &c.,
C. R. BUCKLAND.

One small tent and pole.
1 oz. magnesium wire.
Three tin plates.

Yes, procure them at once.—J. C. Cox. When does Committee next meet?—J.C.C., 27 June.

Mr. J. Sibbald to The Secretary, Australian Museum.

Sir, Wellington, N.S.W., 6 July, 1881.

I received a letter from you, dated the 15th June, concerning some work to be done in the caves near Wellington. I sent you an answer by telegraph, and I also sent you a letter accepting the job. I have waited day after day and have never heard or seen anything about it since. Perhaps you never got the letter. I have only three weeks more to spare, and then I must come down to Sydney on a case pending in the Supreme Court, as a witness for Mr. Smilhermen, contractor of the railway bridge at Wellington, against Cobb & Co. If you would require my services I can attend to you at present. I have picks and ropes and many other things that might be required at the works.

Yours, &c.,
JAMES SIBBALD.

The Under-Secretary for Mines to The Trustees, Australian Museum.

Gentlemen, Department of Mines, Sydney, 8 July, 1881.

With reference to your letter of the 10th ultimo, addressed to the Under-Secretary, Department of Public Instruction, applying for authority to explore the caves and rivers in New South Wales, and asking for information upon the subject, I am directed by the Minister for Mines to inform you that he has much pleasure in granting your request as regards the caves, upon the understanding that the stalactites, stalagmites, and other objects of public interest in the caves be not destroyed or defaced. The Municipal Council of Wellington have been informed of this action, as have also the keepers of the Fish River Caves and Wambean Caves, who have moreover been instructed to afford you every information and facility in carrying out the object in view.

I have also to request you to be good enough to furnish this Department with a collection of the fossils obtained.

I have, &c.,
HARRIE WOOD,
Under-Secretary.

The

The Secretary, Australian Museum, to The Under-Secretary for Mines.

Sir, The Australian Museum, Sydney, 27 July, 1881.

I am directed by the Trustees of the Australian Museum to acknowledge the receipt of your letter of the 8th inst., granting authority to explore caves in New South Wales. In reply thereto the Trustees desire me to convey to you the expression of their sincere thanks for your kindness, and to inform you that a set of duplicate fossils will be forwarded to the Department of Mines.

I have, &c.,
CHARLES R. BUCKLAND,
Secretary.

Professor Liversidge to The Secretary, Australian Museum.

Dear Sir, The Union Club, Sydney, 9 July, 1881.

I am afraid that I cannot attend a meeting of the Committee for Caves and Rivers during the daytime as my time is so much occupied just now. Perhaps the matter could be arranged by letter, or I could attend any evening meeting. Please communicate with the other members. I may be able to assent to what they propose. I think that Barnes and the other man could receive instructions to proceed, even without our actually meeting. I do not understand about the case, and will write to Mr. C. S. Wilkinson, for there appears to be some mistake.

Yours, &c.,
A. LIVERSIDGE.

The Secretary, Australian Museum, to Mr. J. Sibbald.

Sir, The Australian Museum, Sydney, 12 July, 1881.

I have the honor, on behalf of the Trustees of the Australian Museum, to acknowledge the receipt of your letter of 6th instant. I had delayed writing to you sooner, hoping every day to obtain permission from the Department of Mines to make the necessary explorations.

Such permission was only received yesterday, when Mr. Ramsay at once telegraphed to you that Barnes would leave by train to-night.

Mr. Ramsay will be in Wellington next week, but during his absence you will please take instructions from Barnes.

I have, &c.,
CHARLES R. BUCKLAND,
Secretary.

The Secretary, Australian Museum, to The Under Secretary of Public Instruction.

Sir, The Australian Museum, Sydney, 12 July, 1881.

I am directed by the Trustees of the Australian Museum to acknowledge the receipt of a copy of the correspondence on the subject of explorations of caves and rivers, forwarded with your letter, No. 81, 3,948, of 29th ultimo.

In order that a complete record of all correspondence, reports, &c., on this subject may be obtained, the Trustees have instructed me to apply for a copy of all correspondence, &c., subsequent to the year 1870, which may have taken place.

I have, &c.,
CHARLES R. BUCKLAND,
Secretary.

Telegram from Curator, Australian Museum, to Secretary, Australian, Museum.

Wellington Station, 17 July, 1881.

HAVE finished levels and survey of caves; will be down to-morrow night.

E. P. RAMSAY,
Curator.

Mr. J. Sibbald to The Secretary, Australian Museum.

Sir, Wellington, 18 July, 1881.

I write to let you know that my son could not wait to work at the caves with me, as he has an engagement to go down the river to Bourke. He thought he would not have to go so soon.

My son-in-law is working in his place, but he expects more wages than you were allowing my son.

I have, &c.,
JAMES SIBBALD.

The Secretary, Australian Museum, to Mr. J. Sibbald.

Sir, The Australian Museum, Sydney, 25 July, 1881.

I have the honor, on behalf of the Trustees of the Australian Museum, to inform you that they are willing to allow your son-in-law to work, in place of your son, at such rate of wages, not exceeding 8s. (eight shillings) per day, as you may arrange with him.

I have, &c.,
CHARLES R. BUCKLAND,
Secretary.

The

The Curator, Australian Museum, to The Trustees, Australian Museum.

Gentlemen, The Australian Museum, Sydney, 19 July, 1881.

In connection with the exploration of caves and rivers, I have the honor to inform you that as soon as was possible after the necessary sanction from the Mines Department, I sent Henry Barnes, as instructed, to explore and report on the caves at Wellington; and, with your permission, I hope to visit these caves myself some time during the present week, after which I shall be able to report fully as to what can be done in that quarter. In the meantime I have instructed Barnes to sink a shaft in the largest of the old caves, with the view of ascertaining if there is or is not any deposit of fossils below the present floor.

With respect to the rivers in Queensland, it will be necessary to explore the heads of the Mary and Burnett, from the Gympie downwards to the salt waters; and I should recommend also that the Burdekin be well explored. This river drains a large area, and it is very probable new forms of Ganoid fishes will be obtained there.

In order to carry out these explorations, a properly equipped fishing-party should be sent from Sydney, with nets of at least two kinds, fish-traps, lines, hooks, &c., and spirits of wine, &c. The party should consist of at least three men, one of whom should be a taxidermist, the other two men practical fishermen, able to make and repair nets of all kinds.

These men should, I think, first work the head waters of the Mary and Burnett Rivers, and afterwards proceed to the Burdekin, and work into the salt water of that river.

I have, &c.,
E. P. RAMSAY,
Curator.

Telegram from Curator, Australian Museum, to H. Barnes.

Wellington, 20 July, 1881.

LET me know if you have found new cave, and what you are doing.

E. P. RAMSAY.

Mr. H. Barnes to The Curator, Australian Museum.

Sir, Wellington Caves, 28 July, 1881.

Most of those fossils have been taken out of the shaft that we are sinking over No. 3 cave. I have numbered them from the Bell river.

The first cave, which they call the new one, I have been through, but found nothing at all, nor do I think I shall, for there is no indication of any bones in them. We have got about 15 feet down the shaft, which is very hard. It is worse than rock to go through, for it will not stand blasting. I think we are about 5 or 6 feet from the chamber. We are sinking over No. 3 cave. I have marked on the soft papers that the bones are wrapped in the place where they were found.

I have, &c.,
HENRY BARNES.

The Secretary, Australian Museum, to The Under-Secretary, Public Instruction.

Sir, The Australiam Museum, Sydney, 25 July, 1881.

I am directed by the Trustees of the Australian Museum to inform you that they are desirous of exploring the rivers of Queensland, and for this purpose they wish to obtain maps and charts of the rivers of Queensland, with railway passes and permission to shoot for such men as may be sent on the expedition.

The Trustees hope that the Minister of Public Instruction will kindly take the necessary steps for asking the Queensland Government to comply with their wishes.

I have, &c.,
CHARLES R. BUCKLAND,
Secretary.

The Secretary, Australian Museum, to Mr. H. Barnes.

Sir, The Australian Museum, Sydney, 25 July, 1881.

I have the honor, on behalf of the Trustees of the Australian Museum, to inform you that an allowance of £1 per week, in addition to your ordinary salary, will be made to you to defray all cost of living and incidental expenses while exploring caves.

I have, &c.,
CHARLES R. BUCKLAND,
Secretary.

The Secretary, Australian Museum, to Mr. C. Jenkins.

Sir, The Australian Museum, Sydney, 25 July, 1881.

I have the honor, by direction of the Trustees of the Australian Museum, to inform you that they are willing to engage your services for a period of three months, allowing you a salary of £4 per week and travelling expenses by coach. You would also be allowed to engage two men for manual labor, &c., for the purpose of ascertaining if bones or fossils exist in such localities as the Trustees may decide to examine. These men will be paid at the rate of 8s. per day each.

The Trustees will feel obliged if you will kindly inform them which caves you can conveniently explore, when, should you accept their offer, further instructions will be sent to you.

I have, &c.,
CHARLES R. BUCKLAND,
Secretary.

Mr.

Mr. C. Jenkins to The Trustees, Australian Museum.

Gentlemen, North Yass, 27 July, 1881.

I have the honor to acknowledge the receipt of your letter of July 25th inst., and to state that I have much pleasure in accepting the terms therein contained with reference to the exploration of rivers and caves.

I understand by travelling by coach, mentioned in your letter, to mean actual expenses incurred going from one place to another. With regard to the request of the Trustees as to "which caves, &c.," I may state that I would propose in the first instance to explore the Coodradigbee Caves. Of these the late Rev. W. B. Clarke says (page 104, fourth edition, Sedimentus Formatus) the Coodradigbee Caverns will repay research hereafter. They have already furnished me with bones of birds in which those of an emu are prominent.

I have already obtained from the strata exposed in the neighbourhood of these caves nearly all the fossils described as Devonian from these parts by Professor Koninck.

I have no doubt that while exploring these caves I shall obtain for the Trustees many valuable things from the adjoining strata.

I have, &c.,
CHARLES JENKINS.

I would recommend that Mr. Jenkins be authorised to proceed at his earliest convenience to examine the Coodradigbee Caves, and to furnish vouchers for expenses incurred. He should be requested to exercise every care in removing and packing the fossil bones, and to note the depths at which they are found, and the nature of cave deposits in which they occur.—C. S. Wilkinson, Sydney, 4/8/81.

I concur with the above and would suggest that Mr. Jenkins be asked to report progress from week to week, or once every 14 days, after he has once commenced operations.—A. Liversidge, 5/8/81. I concur with the above suggestions and recommend that from £25 to £50 be advanced at once.—J.C.C. Mr. Jenkins should have a copy of these suggestions sent to him.—J.C.C., 6/8/81. Seen.—C.S.W. Agreed to.—A.L., 8/8/81.

Mr. H. Barnes to The Curator, Australian Museum.

Sir, 8 August, 1881.

We have got down the shaft 26 feet, and passed one small chamber with very few bones in it. We have got on a large rock at the bottom, and are going to blast so as to be able to go through into the chambers of the cave, which I think we are near to now. I believe we shall get some good things in the roof of the cave when we go through it, for all the bones seem to be in the roof of the cave; there is nothing of any account in the floor. Will you be kind enough to send some seidlitz-powder boxes and a large hammer, about 6 or 8 pounds, to break the rock with.

HENRY BARNES,
Wellington Caves.

Mr. C. Jenkins to The Trustees, Australian Museum.

Gentlemen, North Yass, 8 August, 1881.

In my letter of the 27th ultimo, in which I accept the offer contained in yours of 25th, I, in reply to a request contained in your letter that I would state the caves that I could conveniently explore, only name those that I proposed to work first. Thinking since that I had not sufficiently fully answered your question, I may state that I am quite prepared to undertake the exploration of any caves the Trustees may desire; but that in the first instance it would be more convenient for me to explore those named in my former letter.

There are a great many caves (at least a dozen) on the Coodradigbee, most of which I have been in; some, however, have been discovered that I have not seen of great length, as I learn, and with many ramifications. After exploring these and the neighbouring ones on the Murrumbidgee, as the weather by that time will be warmer, I would like to explore Lock's Hole, Manero, and the neighbouring caves; then I would propose to work westward. Assuring you that I will devote my best energies to the work I have undertaken,

I have, &c.,
CHAS. JENKINS.

Memorandum from Secretary, Australian Museum, to Dr. Cox.

Dear Sir, 9 August, 1881.

The enclosed note from Mr. Jenkins arrived this morning.

I presume it will make no difference in previous instructions.

Will you kindly sign the enclosed cheque that I may forward it with his instructions to-night.

The boy will go to Mr. Wilkinson for his signature to the cheque.

Yours faithfully,
CHARLES R. BUCKLAND,
Secretary.

Please forward this to Mr. Wilkinson. Seen.—C.S.W., 9/8/81.

The Secretary, Australian Museum, to Mr. C. Jenkins.

Sir, Sydney, 10 August, 1881.

I have the honor, on behalf of the Trustees of the Australian Museum, to ackowledge the receipt of your communication of 27th ultimo and 8th inst., and to inform you that they are anxious for you to proceed at your earliest convenience to examine the Coodradigbee caves. It is necessary that every care should be exercised in removing and packing the fossil bones, that you should note the depths at which they are found, and the nature of the cave deposits in which they occur. The Trustees also wish you to report progress from week to week after you have commenced operations.

I

I beg to enclose a draft on the Commercial Bank at Yass for £25 (twenty-five pounds). Will you kindly sign and return the enclosed vouchers without delay, submitting hereafter the vouchers for expenditure, which must be sent to the Auditor-General. Please inform me the date that you commence work, and when you engage labourers, &c., that a further sum of money may be sent to you when required. Full statements of expenditure should be forwarded so as to reach Sydney before the last day of each month. Enclosed are six railway ticket orders. Will you kindly keep a memorandum of the dates on which they are used and the stations where obtained with the destination.

The Curator is of opinion that the specimens should be packed in soft paper and grass to prevent friction.

I have, &c.,
CHARLES R. BUCKLAND,
Secretary.

Mr. C. Jenkins to The Trustees, Australian Museum.

Gentlemen, North Yass, 12 August, 1881.

I have the honor to acknowledge the receipt of your letter of the 10th instant, conveying instructions to explore the Coodradigbee caves, and containing a Bank draft for £25 for expenses.

I will start as soon after the 18th instant as I can. On the 18th my daughter is to be married, and cannot well leave before.

I will inform you when I actually leave for the work.

I have, &c.,
CHAS. JENKINS.

Telegram from Curator, Australian Museum, to Secretary, Australian Museum.

Wellington, 12 August, 1881.

BARNES wants £5. Get it through on Tuesday. Will write by to-night's post.

E. P. RAMSAY,
Curator.

Telegram from Curator, Australian Museum, to Secretary, Australian Museum.

Wellington, 20 August, 1881.

MEN want some money. Send 1 oz. magnesium wire and measuring tape.

E. P. RAMSAY,
Curator, Australian Museum.

Telegram from Secretary, Australian Museum, to Curator, Australian Museum.

22 August, 1881.

WIRE and money sent to Barnes to-night.

C. R. BUCKLAND,
Secretary, the Australian Museum.

The Secretary, Australian Museum, to Mr. H. Barnes.

Sir, The Australian Museum, Sydney, 22 August, 1881.

I beg to enclose a draft for £14 8s., payable to Mr. J. Sibbald, which will, I believe, pay his wages and those of his son-in-law, from 13th July, the date of their commencing work with you, to 3rd August. You have not advised me in any way when the men began to work or when Mr. Sibbald was in town, which I only heard casually, so that I must rely upon you to see that the dates mentioned in the enclosed vouchers are correct, or altered by Mr. Sibbald, if necessary.

I believe that some other men have been employed at the caves, but I have not learnt how many there are, when they commenced work, or their rate of wages. No money can be sent until these particulars are to hand.

Please return the vouchers, stamped, without delay.

I have, &c.,
CHARLES R. BUCKLAND,
Secretary.

Mr. H. Barnes to The Secretary, Australian Museum.

Sir, Wellington, N.S.W., 24 August, 1881.

The date for Mr. Sibbald and his son-in-law is correct. The other men (two), Mr. Byrne and Mr. Burrell, came to work on the 14th August, 1881, at the same rate of wages as that of Mr. Sibbald.

HENRY BARNES.

Mr. C. Jenkins to The Trustees, Australian Museum.

Gentlemen, North Yass, 25 August, 1881.

I have the honor to state that I send camp equipage by train to Bowning, and thence by dray to the caves, at which it will arrive to-morrow. I leave by to-morrow's train and will arrive at the caves as soon as the tents.

We shall be 10 or 12 miles from a post office, and 20 miles from the railway. The post is conveyed from railway on horseback, so that any bones transmitted will have to be sent at least 20 miles by special conveyance.

There are two squatters who send for letters, as far as I can learn, twice a week. The days at present I do not know. At the first caves we shall get the post through these squatters easily enough, but at the other caves we shall have to send from 4 to 6 miles for the post. Many

Many of the caves are on private property. I do not generally expect any objection from the proprietors of the land to my exploration. There is one large series of caves at Narangall's, on the Murrumbidgee, a few miles from the Coodradigbee Caves, on the property of Dr. Campbell. I think it well that the Trustees should make formal application to Dr. Campbell to allow me to do the necessary work to explore those caves.

I have, &c.,
CHAS. JENKINS.

Mr. C. Jenkins to The Trustees, Australian Museum.

Gentlemen, Camp at Cave Flat, Goodradigbee, 28 August, 1881.

I am camped by the first set of caves I proposed to explore. I find that Mr. Hannan sends in for his post on Saturdays regularly, so that my weekly reports will reach Sydney on each Monday morning. The nearest post town is Bookham, about 16 miles from here, to which place letters to me should be addressed.

I have, &c.,
CHAS. JENKINS.

The Secretary, Australian Museum, to Mr. H. Barnes.

Sir, The Australian Museum, Sydney, 29 August, 1881.

I have the honor to inform you that Mr. Ramsay requires you to return to Sydney on Tuesday night without fail; you will leave directions with the workman at the caves, and bring with you all your negatives, leaving the camera at Wellington. Enclosed please find a pass for the railway.

I have, &c.,
CHARLES R. BUCKLAND.
Secretary.

Mr. C. Jenkins to The Trustees, Australian Museum.

Gentlemen, Camp at Cave Flat, 2 September, 1881.

I have the honor to request that I may be furnished with vouchers in order to furnish account of expenses at the end of the month as requested.

In the meantime I shall feel obliged if you will place some money to my credit in the Australian Joint Stock Bank, Yass Branch.

I have, &c.,
CHAS. JENKINS.

Mr. C. Jenkins to The Trustees, Australian Museum.

Gentlemen, Cave Flat, Murrumbidgee, 2 September, 1881.

I have the honor to report the result of my exploration so far of the cave at Cave Flat, Murrumbidgee, near the junction of the Goodradigbee and Murrumbidgee Rivers, and situate 4 chains 86 links west of the east corner of Swift's 65 acres, county of Harden. The cave has a noble entrance in the face of a nearly vertical cliff of limestone, about 78 feet high. The entrance is about 40 feet above the Murrumbidgee ordinary summer level, and above the height reached by the greatest known flood. The flood of 1870 did not come up to the entrance, and that was higher here than that of 1852, known as the Gundagai Flood. As seen on the face of the cliff the entrance has a triangular form; but immediately within the entrance the form is modified by stalactite roof cutting off the upper angle. A triangular form is preserved, more or less, throughout all the passages and chambers. This form is dependent on the dip of the limestone rock. But the slope of the west side, as a whole, does not exactly coincide with it, as the side is made up of different layers of the rock at short distances apart.

The west side inclines generally at an angle of about 60°, so that the opposite side rises to a great height whenever the passage is not very narrow. The right side (by the right I mean the right-hand side on entering) is nearly vertical throughout, more or less covered with stalactite incrustations, and where the passages widen out the right halves of the chambers are filled with beautifully formed white, or variously tinted, and sometimes massive, stalactites and stalagmites.

The left side exhibits throughout little more than the dark grey limestone rock of the cliff, are relieved by bold massive fractures, and occasionally by small stalactites and stalactite stains. The entrance chamber at the entrance is 42 feet wide, and has a depth of 80 feet, with a height of about 30 feet.

From this chamber two passages start, one from each of the far corners.

That from the right is a length of 200 feet; that from the left a length of 420 feet.

In the right passage, 379 feet from the entrance to the cave, there is a small opening, about 2 feet high, on the left side, which leads to another chamber. I have enclosed a diagram of the plan of the chambers, and affixed numbers for the purpose of future reference.

The excavations I have made as yet have been made at spots marked on the diagram as *(a)*, *(b)*, and *(c)*. At *(a)*, for a depth of 6 inches in a dark earth containing a quantity of lime. This deposit is full of bones of a small marsupial not much larger than a mouse, and belonging, as I think, to the family "Hypsiprimuus." Below this earth, which extends about a foot lower than I excavated, is seen, by the slope of the ground, a yellowish earth containing a quantity of lime, and studded with elongated ovoid cavities nearly filled with earth the same as that around, of the form of the cavities but not quite so large, so that it easily drops out. The cavities are lined with a dark glaze. I have obtained one well preserved insect from one of these, and traces of insects having been in others. At this spot I merely made preliminary trials before proceeding to sink deep.

At *(b)* sinking was continued to 6 feet, when a mass of rock prevented further sinking.

Both here and at *(c)* the upper layer full of bones was wanting, but the succeeding layer with hollow cavities was present at both places. This layer contains fur, and in some part no bones. As the different strata passed through at *(c)* exhibited for 6 feet the same characteristics as that passed through at *(b)*, I shall confine myself to the description of the results obtained at *(c)*.

At *(c)*, at about 3 feet, bones began to be again plentiful. The bones of the small marsupial, though they were still present, and in fact extended all through the excavation, began to be mixed with marsupial bones

bones of larger animals. The bones increased in size until a depth of 5 feet was obtained, where the fossil bones were found. Below this, broken stalactites and lumps of rock made the sinking troublesome. At 6 feet a stalactite floor was passed through, at 9 feet 6 inches the solid limestone was reached. From 6 to 9 feet the bones were not quite so plentiful. The principal bones found were those of the limbs. Several lower jaws and some upper jaws of the small animal above referred to, and part of a lower jaw of a marsupial of the kangaroo family, together with some lower jaws of small carnivorous marsupials.

In all I have 1,600 bones, representing parts of the skeletons of at least 200 individuals.

The limestone, of which the cliff is composed in which the cave is situated, is a dark grey limestone belonging to the limestone in which the fossils are found—that M. Kormind has described as Devonian—from the Murrumbidgee and neighbourhood of Yass. It is made up chiefly of coral. The dip of the limestone 43° W.S.W. Thick bedded (20 feet between bedding joints) and pointed nearly at right angles to the strike.

There has not been much disturbance since the cave was formed as the stalactites are all nearly vertical; some, however, incline slightly towards the entrance.

As to how the bones came into the cave I remark that they were never brought there by water—no drift was found in sinking. I could not find any tracks of marsupials inhabiting the caves at present, though some of the party have sharp eyes.

As by a settler opposite going to Yass on horseback on next Tuesday I have an opportunity of forwarding a parcel to the railway, I will send a few of the bones by him. The rest I will pack up and send in the first chance I have.

Perhaps you will be kind enough to supply me with maps of the Counties of Cowley and Buckland, so that I may mark on them for you the situation of the caves I explore, and record on the maps also the geological character of the parts I pass over.

I have, &c.,
CHAS. JENKINS.

The Articulator, Australian Museum, to The Curator, Australian Museum.

Sir, Wellington, N.S.W., 5 September, 1881.

Would the Trustees kindly let me have three sets of copies of the photos. that I have taken of the Wellington Caves.

I have, &c.,
HENRY BARNES,
Articulator.

The Secretary, Australian Museum, to The Articulator, Australian Museum.

Sir, The Australian Museum, Sydney, 8 September, 1881.

I have the honor, by the direction of the Trustees of the Australian Museum, to inform you that they approve of your application of 3rd instant, for three copies of the photographs taken by you of the Wellington Caves.

I have, &c.,
CHARLES R. BUCKLAND,
Secretary.

Mr. C. Jenkins to The Trustees, Australian Museum.

Gentlemen, Camp at Coodradigbee, Cave Flat, Barkham, 6 September, 1881.

I have the honor to report that I have transmitted a small parcel of bones on Tuesday last, all obtained at a depth of 4 feet to 5 feet—the larger ones at 5 feet. On Monday next, 9th instant, I transmit box containing several thousand, with specimen of rock soil at different depth, and corals, fossils, &c. It will reach Barkham on Monday, Bowning on Tuesday, and reach Sydney I expect on Wednesday through the agents, Messrs. Wright, Heaton, & Co.

I have had the excavation continued in the entrance chamber and right-hand passage.

Particulars in detail of the work and of the things sent will reach you at the same time as the box.

I have, &c.,
CHAS. JENKINS.

Mr. C. Jenkins to The Trustees, Australian Museum.

Gentlemen, Camp at Cave Flat, Cooradigbee, 16 September, 1881.

I have the honor to report that in the cave at Cave Flat, which I will call Cave No. 1, I have excavated the whole, as far as practicable, of the entrance chamber. I have also excavated in the right-hand passage.

The total result is the obtaining a great quantity of bones of small animals, with a number of jaw, thigh, hip, and shin bones of some animals of the kangaroo family. The smaller bones are those of mice, bats, birds, and marsupials.

In collecting such small bones I could not, especially at first, help getting a great number of the same sort; as otherwise, while the bones were covered with earth not easily removed, I might reject what I did not wish to. It was not until I had cleaned the bones, for the purpose of packing, that I found I had not so great a variety, except in size, as I had expected.

I am afraid they are all recent species, though from the nature of the soil and depth at which the kangaroo and some of the other bones were obtained they must have been deposited when probably many animals now extinct existed.

The consideration of a few particulars with regard to this cave deposit, which may not be without interest to you, leads, I think, to this conclusion: In the first place the upper layer of soil is a dark grey soil, similar, but for the addition of lime from the cave, to the alluvium at present deposited by the river. This extends in different places to a depth of 6 inches, 1 and 2 feet. Below this is a yellow ochreish earth, but for the addition of lime from the cave, similar to that found on the high flats and lower slopes of the river valley. The bottom of the dark grey soil marks, I think, the period when the alluvium formed by the river began to be coloured by the black soil of its present banks, about 20 feet high.

The soil below I take to indicate that it was deposited at the same time as that on the upper flats and lower slopes. The soil in the cave from its fineness, and although mixed with masses of broken limestone and stalactites, is free from drift pebbles. That such would be the case is evident from the fact that although the river, when at its ordinary level flows towards the cave, yet when in flood it overtops its banks; the main current is about a quarter of a-mile from the cave and the junction of the Murrumbidgee and Coodradigbee some distance from where they ordinarily join in the angle formed by their present beds. There is at such time only back water in front of the cave with a slight reversed current.

The time that has elapsed since the yellow earth in the cave was deposited may be inferred from the fact that in the right-hand passage there is a depth of 5 feet 6 inches of yellow earth without any upper grey layer. It is sufficiently long since the river flowed into that passage to allow of the accumulation of 10 inches, and in some places much more, of bat's dung without any admixture of soil. I find no evidence of the river having been higher—since it has deposited alluvium similar to that now forming—than about 27 feet higher than the flood of 1870, or within about 10 feet of the height of the right-hand passage. The other three principal caves in the immediate neighbourhood which I have examined (besides some smaller ones) I will describe as Caves Nos. 2 and 3.

In Cave No. 2, the principal chamber, approached by a low passage, is 38 feet by 25 feet. From the right corner of this a passage leads to near the surface, 36 feet long. From the left there is a passage 30 feet long. From the right passage another leads to the left 45 feet long.

Cave No. 3. The principal chamber is 132 feet by 20 feet, approached by a passage 45 feet long. From the right-hand corner of this a passage leads 70 feet by 30 feet. From the left-hand a passage leads 15 feet by 15 feet.

In Cave No. 4, the principal chamber, approached by a passage 20 feet long, is 140 feet long by 30 feet; from this a passage leads 40 feet long by 15 feet wide.

In Cave No. 2 I found on the surface a number of kangaroo and other bones of large size, but not larger than those of recent species.

After sinking 2 feet 9 inches I reached stalagmite floors 4 to 6 inches thick. Between this and the surface I found several large kangaroo and other bones; 1 foot 6 inches below I found portion of a large shin bone of a kangaroo, other bones, and a large tooth. The shin bone larger than that of any existing at present, as far as I know.

This cave is the most promising of any I have yet examined, and I am having it thoroughly excavated. I regret I was disappointed in not being able to send bones. I expect to be able to forward them about Tuesday next. I will send plan showing the relative position of caves, &c.

I am, &c.,
CHAS. JENKINS.

The Curator, Australian Museum, to The Trustees, Australian Museum.

Gentlemen, The Australian Museum, Sydney, 20 September, 1881.

I have the honor to report that the work of exploring for fossil bones at the Wellington Caves is progressing favourably, and that many interesting and valuable additions have been made to the Museum collections.

The first work undertaken was that of sinking a shaft over the north-west chamber of the Breccia Cave; at a depth of 4 feet the first bones were met with, and from thence to the depth of 35 feet we found bones in quantity, but very much broken; nevertheless, by carefully cutting them out of the breccia, we have secured many fine specimens, notably and almost perfect, the left side of the lower mandible of the thylacoleo with the molars and articulating condyle, which portion was not previously known; its position and form tends greatly to prove Professor Owen's theory of this animal being carnivorous and not an herbivorous marsupial.

A great number of interesting bones have already been obtained from this shaft, but the mass of 35 feet of bone breccia which we passed through shows that we have here a large field for exploration. From this shaft we have obtained bones of the following animals, besides a great number of small bones yet undetermined:—Diprotodon, macropus, palorchestes, sthenurus, procoptodon, protemnodon, halmaturus, thylacine, beltongia, sarcophilus, phascolomys, dasyurus, phalangista, pteropus (?), bats, rodents (mus), a few lizards' bones, and a few vertebra of lizards and snakes.

We have numbered, for the sake of reference, the Caves from the Bell River to the top of the limestone ridge, No. 1 being nearest the river on the flat ground.

I.—This cave I examined for about 100 feet, only from the entrance, being prevented from entering further on account of the mud and water it contains at present.

It will require further exploration when the water subsides.

II.—No. 2 showed no *signs* of fossil bones anywhere, and was not fully explored.

III.—No. 3, the Breccia Cave, exhibits bones from its very entrance. To this cave most of our time was devoted, and up to the present it has given the best results.

IV.—No. 4, the large cave, at first showed no signs of bones in any part of it, but upon sinking in the floor I obtained bones among the loose debris at a distance of 10 feet from the surface; these consisted of a few of the teeth of a diprotodon and bones of macropus and halmaturus, but chiefly of birds and rats. We trenched about 10 feet along the bottom, but with poor results.

Cave IV.—At No. 2 shaft, which we sunk to the depth of 25 feet, many important bones have been found, and the different floors we went through show that these bones have been washed in at different periods. In the last layer the red mud like breccia which characterised this shaft (at present) has become more sandy, the bones being more perfect here and less worn. They are chiefly of halmaturus and macropus, a few of diprotodon, and one or two limb-bones which I believe will prove to belong to the thylacoleo, but at present no teeth of this animal have been found in this cave.

I have now given instructions to sink another shaft in another part of the cave, where I hope to obtain further results and report on this work after my next visit.

I have, &c.,
E. P. RAMSAY,
Curator.

The

The Secretary, Australian Museum, to Mr. C. Jenkins.

Sir, The Australian Museum, Sydney, 26 September, 1881.

I have the honor, on behalf of the Trustees of the Australian Museum, to acknowledge the receipt of your letter of 20th instant, and in reply thereto beg to inform you that Government voucher forms are not necessary for the receipts to be furnished by you which will be attached to your voucher.

No further supply of money can be sent to you until the meeting of the Board of Trustees on 4th October.

I have, &c.,
CHARLES R. BUCKLAND,
Secretary.

Mr. C. Jenkins to The Trustees, Australian Museum.

Gentlemen, Camp at Cave Flat, 24 September, 1881.

I have the honor to report the further excavation of Cave No. 2, and the obtaining below the stalagmite a portion of the jaw of a wombat, with other bones of kangaroo and carnivorous marsupials.

In Cave No. 4 I excavated to the depth of 9 feet, without as yet any special result; then visited a series of caves 5 miles distant, and arranged for moving camp nearer to them.

These caves are near the post in 61, parish of West Coodradigbee.

One is larger than any of those I have yet explored.

I have, &c.,
CHAS. JENKINS.

Mr. C. Jenkins to The Trustees, Australian Museum.

Gentlemen, Camp at Cave Flat, 25 September, 1881.

Having succeeded in obtaining a couple of pay-vouchers, I have the honor to forward them with account of expenses.

I have sent them to you, instead of to the Auditor-General, as directed in your instructions; so that if not filled as required I may alter them, or supply others filled in the manner you may wish before the end of the month.

I have made them out from the day I entered upon the work to the end of this month.

I have, &c.,
CHAS. JENKINS.

The Secretary, Australian Museum, to Mr. C. Jenkins.

Sir, The Australian Museum, Sydney, 27 September, 1881.

I have the honor, on behalf of the Trustees of the Australian Museum, to acknowledge the receipt of your letters of 24th and 25th instant.

With respect to the vouchers forwarded by you I may state that separate ones will be sent you, with cheques, for yourself and each of the workmen, who must sign their own vouchers. The other items in your account will be charged to the advance of £25 already sent you, and the Storekeeper's receipt for tent, tools, &c., should be forwarded, together with the receipt for 30s. from the owner of the conveyance that took you from Bowning.

A memo. of all small expenses, such as coach to Railway and cartage, of a few shillings, should be kept and certified to by you at the end of each month.

No cases of bones have yet been received at the Museum.

I have, &c.,
CHARLES R. BUCKLAND,
Secretary.

Mr. H. Barnes to The Curator, Australian Museum.

Sir, Wellington, N.S.W., 28 September, 1881.

I finished the shaft at well-rock at 6 feet. All the flat specimens in this box have been taken out of this shaft. I commenced another in a line at the altar 9 feet and 3 feet. I intend to take photos. on Saturday of carved trees. There are very few bones in the dirt in No. 3 Cave, and a great deal of dirt to get out yet. Let me know if I shall clear it all out, or drive in it for bones?

I have, &c.,
HENRY BARNES.

The Secretary, Australian Museum, to Mr. C. Jenkins.

Sir, The Australian Museum, Sydney, 1 October, 1881.

I have the honor, on behalf of the Trustees of the Australian Museum, to inform you that the sum of £49 17s. 4d. has been placed to your credit in the Yass branch of the Australian Joint Stock Bank, exchange having been paid here.

I enclose vouchers for yourself, £22 13s. 4d., and for two workmen £13 12s. each, being all salary and wages due to 30th instant. Will you kindly return the vouchers when signed, filling in the names of the two men whom you have employed.

I may again mention that no specimens have yet been received from you.

I have, &c.,
CHARLES R. BUCKLAND,
Secretary.

Mr.

Mr. C. Jenkins to The Trustees, Australian Museum.

Gentlemen, Camp at Cave Flat, 10 October, 1881.

I have the honor to report that a box of bones was left at Bowning on the 8th instant, to be forwarded by the agents, Messrs. Wright, Heaton, & Co.

One tin was forwarded, as stated, one month since.

I have arranged for the carriage of three more boxes, with fossils and bones, this week. It is very difficult to get cartage from here.

I have, &c.,
CHAS. JENKINS.

Telegram from Curator, Australian Museum, to Secretary, Australian Museum.

Wellington Station, 10 October, 1881.

SEND 1 oz. magnesium wire by to-night's post.

E. P. RAMSAY,
Curator.

Mr. H. Barnes to The Secretary, Australian Museum.

Sir, Wellington, N.S.W., 12 October, 1881.

Will you be so kind as to send me £10 on account, to pay sundry accounts, for which I will produce vouchers.

I have, &c.,
HENRY BARNES.

Mr. C. Jenkins to The Trustees, Australian Museum.

Gentlemen, Camp at Cave Flat, 18 October, 1881.

I have the honor to report that I have at last succeeded in getting three more boxes to the Bowning Station containing bones and fossils.

The bones are similar to those already forwarded, with the exception that amongst these is the upper jaw of a wombat, with five parts of bones of the cranium; these parts all join. I searched well for the remainder of the head, but the earth is a thick adhesive mud, and I could find no more.

The fossils are numbered with reference to a plan and section which I will forward immediately.

The fossils I have sent, together with others I have (which I will forward the first opportunity), will render it easy to co-relate these beds with others that may be explored here, and also to establish their relation to European formations.

I have forwarded you a specimen of the kind of limestone in which here most of the holes and caves are found. On the weathered surface, and generally also on a cleared portion, there is hardly any appearance of a fossil. In reality, however, it is full of beautifully fine corals and polyzoa.

The most abundant shells in some parts are those of loxenoma and murchisonia. These are, however, in most cases difficult to find, and can only be obtained as weathered. Any attempt to improve a specimen of one of these is useless and generally ends in destroying the whole. Besides these, I have obtained specimens of atrypa reticulosus and an atrypa, showing internal spiral, common to the Yass and Hume beds; also a few spinifers. Although plenty of spinifers can be seen in some of the rocks I have only succeeded in obtaining parts of a few. There are no slabs to be obtained here covered with spinifers as is the case with the limestone higher up the river. Rhynchonella, linguda, dentaliun, and orthocerus you will also find amongst those forwarded.

The corals and polyzoa are most abundant, including gathyphyllidœ, tavositadœ, antopora, and others.

The different zones, specially characterised by different fossils, will be shown in the plan, so as to make the fossils of as much value as possible.

Believing that I could get deeper in some parts of Cave No. 1, where stopped by large slabs of limestone, I procured the necessary tools to burst up and remove the rock. I have got through about 5 feet of stone, consisting of two slabs 1 foot thick and about 3 feet of stalagmite.

The soil and bones beneath at present are much the same.

I hope, however, to get much deeper yet.

I have, &c.,
CHARLES JENKINS.

The Curator, Australian Museum, to The Committee of Management of the Exploration of Caves and Rivers.

Gentlemen, The Australian Museum, Sydney, 21 October, 1881.

I have the honor to recommend that Mr. Jenkins be instructed to shift his camp from the caves at Coodradigbee and explore the caves near Cowra. I am fully convinced that no fossil bones of any value are being obtained in the Coodradigbee Caves. He might also be instructed to obtain skeletons of any of the Aborigines which he may find in the vicinity of his camp.

I have, &c.,
E. P. RAMSAY,
Curator.

I approve of the Curator's suggestion, and think it should be carried out at once.—J. C. Cox, 25 October, 1881.

The Secretary, Australian Museum, to Mr. C. Jenkins.

Sir, The Australian Museum, Sydney, 26 October, 1881.

I have the honor, by direction of the Trustees of the Australian Museum, to acknowledge the receipt of your letter of 18th inst. The boxes of bones referred to have not yet come to hand.

The Trustees desire me to inform you that it is their wish that you should at once leave the Coodradigbee Caves and explore those near Cowra, at the same time obtaining as many skeletons and skulls of Aborigines as may be found buried near your camp. You will at once arrange for removing to Cowra, forwarding all your specimens from your present camp.

I

I beg to draw your attention to the remarks in my letter of 10th August last *re* railway tickets, also to the fact that I have received no acknowledgment of my letter of 27th September, forwarding vouchers for signature, which should have been returned ere this; also asking for vouchers for small amounts which have been paid by you. Trusting that you will forward the same without delay,

I have, &c.,
CHARLES R. BUCKLAND,
Secretary.

Mr. H. Barnes to The Secretary, Australian Museum.

Sir, Wellington, N.S.W., 23 October, 1881.

I wrote to you about a week ago asking you to let me have £10 to pay a few small bills with, but I have not received an answer as yet.

Will you be so kind as to let me know whether I shall send the bills down to you, as the people want to be paid. Please let me know what I am to do about the matter.

I have, &c.,
HENRY BARNES.

Mr. C. Jenkins to The Trustees, Australian Museum.

Gentlemen, Yass, October, 1881.

I have the honor to report that, in accordance with instructions contained in your letter, I left the Coodradigbee Caves for the purpose of proceeding to Cowra.

As instructed, I exhumed the bones of a black gin, buried twenty years ago at Macoomla, 6 miles from my camp.

The gin had been buried close by an ant-hill. The ants had, since the burial, extended the hill right over the grave.

Many of the bones were too decayed to obtain, though the large bones were pretty good. The head was nearly perfect.

The gin was a thorough black.

Mrs. Robertson, who saw her buried, being a great friend of the blacks, pointed out to me the spot where she died.

The gin's knees were doubled up in the ordinary way, but she was not placed in an upright position, but laid on her back or side, with her head to the west. They laid her upon her opossum cloak, and begged from Mrs. Robertson the old bag that had been given to the gin to lie on during her sickness. All the things she used or wore were placed in the grave beside her. Over the body were placed—first, small twigs, then others, gradually increasing the size, until some of the sticks were the size of a man's arm.

I then proceeded to Bogalong, where another gin was buried about four years ago. She was also a thorough black, between thirty and forty years old. Unfortunately I found the body had been disturbed, and the head taken away. The head, I learnt, had been sent to Dr. Schuette, of Sydney, about a fortnight since. I secured all the other bones, with the exception of a few small bones of one foot. The mode of burial in this case appeared to have been similar to that above described. The depth of both graves from 3 to 4 feet. I should have stated that the ground was levelled over the grave, and no mound was left as with us. There are others that I know of in this neighbourhood which I propose to secure if you desire it.

I have forwarded by post with this letter a tracing from a rough plan of as much of the strata as I had time to trace.

I had not time to put all the information I wished on the tracing and send it to-night.

I will, however, supply all the detail as I get time. The fossils forwarded were lettered with reference to the place. The spot S, where the large cephalopods were found, is just on the horizon of B, but I regret that I had not time to identify the exact stratum at the hill near the cave. The limestone extends on the west somewhat farther than I have shown. The portion shown by me comprises the parts of three folds. The anticlinal and synclinal axis of the folds are near north and south. They are not vertical, but have a dip to the west. I must defer stating other particulars until to-morrow.

The fossils I have to forward include another large curved cephalopod, nearly perfect, and several parts of bony head shield of fishes, apparently astreolipis.

I have written to Young to arrange for means of getting to Cowra, and expect a telegram to-morrow, when I will let you know the time I shall probably get there.

I delayed sending vouchers as I could not get the receipt you required, and one for conveyance is still wanting. I called at the man's house on my way, but he was away. I shall get it, however, immediately, I believe. The delay in the cases arriving I find arises from the custom of keeping parcels at the station until there are enough to fill a truck.

The bones (three) you had not received on the 26th were, I was informed, delivered on the 27th.

I have, &c.,
CHARLES JENKINS.

The Curator, Australian Museum, to Professor Owen.

My dear Professor Owen, The Australian Museum, 27 October, 1881.

I have much pleasure in enclosing you a receipt for a small box of casts of fossil bones.

The flat teeth are those of which I proposed the name of Seeparnodon, but which name need not be retained by you, as no description has been published of them. The rounded curved tooth (and the smaller of the flat teeth) was obtained in the central part of South Australia, I believe near Lake Eyrie. I found them among a collection which I was asked to determine at the Melbourne Exhibition, and took casts of them.

them. Of the large flat tooth there is no record. Those numbered A 3294, A 3295, came from Gelgoine Station, N.S.W.; they were sent by Mr. Yeomans, and found in a deep hole in the creek, which was being cleaned out for water. They are quite black, glossy, and seem to be impregnated with iron, which makes them very heavy.

I trust the contents of this box will reach you safely, and with many kind regards,

I have, &c.,
E. P. RAMSAY,
Curator.

P.S.—The Trustees of the Museum have given me permission to send you casts of any bones in their collection that you may require. I believe I have at last the pelvis of a *thylacoleo* and a vertebræ.—E.P.R.

Mr. C. Jenkins to The Trustees, Australian Museum.

Gentlemen, Camp at Cave Flat, 28 October, 1881.

I have the honor to report that I have this day forwarded to Bowning, for transmission, another box containing fossils of corals, spinifers, cephalopods, and trilobites.

The large curved cephalopods are probably cystoceros. In one, at any rate, the external siphuncle is very plain. If it is attempted to separate from the stone the unbroken one, such attempt had better be made by cutting and chiselling, otherwise the specimen will be broken all to pieces. Specimens from these beds cannot fail to become of great interest and value, from the mixture of Devonian and Silurian forms found in them.

I have parts of fish-bones, probably of cacosteus, and other specimens of megalodon and other shells, which I will forward as soon as possible.

I have, &c.,
CHAS. JENKINS.

Telegram from Curator, Australian Museum, to Mr. H. Barnes.

Wellington, 31 October, 1881.

KNOCK off Sibbald's mates; keep Byrne and Burrell on.

E. P. RAMSAY,
Curator, the Australian Museum.

The Secretary, Australian Museum, to Mr. H. Barnes.

Sir, The Australian Museum, 31 October, 1881.

I have the honor, on behalf of the Trustees of the Australian Museum, to enclose vouchers and cheques for Burrell, £10 8s.; Byrne, £10 8s.; Sibbald, for two men, £20 16s. Please return the vouchers when signed correctly as marked. Cheques for the accounts received from you this morning will be forwarded on Wednesday next. Mr. Ramsay has telegraphed you instructions to dispense with the services of the boy and man engaged by Sibbald from this date.

I have, &c.,
CHARLES R. BUCKLAND,
Secretary.

Please pay Mason & Co.'s account of 4s. 6d., and I will repay you on your return to Sydney.—C.R.B.

Telegram from Curator, Australian Museum, to Mr. C. Jenkins.

Coodradigbee, 31 October, 1881.

ONLY employ one man from date, 1st of November. When will you be at Cowra?

E. P. RAMSAY,
Curator, Australian Museum.

Mr. H. Barnes to The Secretary, Australian Museum.

Sir, Wellington, N.S.W., 1 November, 1881.

I find no P.O. order in the enclosed. Will you be so kind as to let me know where Lismore is, and whether I shall have to go there to get the money, for I don't understand anything about it; and will you be so kind as to ask Mr. Ramsay if I am to knock off Mr. Sibbald as well as his mates, as his telegram says only Sibbald's mates.

Yours obediently,
HENRY BARNES.

Telegram from Secretary, Australian Museum, to Mr. H. Barnes.

IF you received Morton's letter please return it. No instructions sent to dismiss Sibbald. Have you received cheques and vouchers for men's wages? Reply.

C. R. BUCKLAND,
Secretary, Australian Museum.

Telegram

Telegram from Mr. H. Barnes to Curator, Australian Museum.

Wellington, 2 November, 1882.

MEN'S vouchers sent by post to-day.

HY. BARNES.

Telegram from Curator, Australian Museum, to Mr. H. Barnes.

2 November, 1881.

KNOCK off all men on Monday evening and await further orders. Don't fill up the trenches. Have you plenty dry plates?

E. P. RAMSAY,
Curator, Australian Museum.

Dates when the men were knocked off work at the Wellington Caves:—James Brooks and boy, 24 October, 1881; James Sibbald, George Byrne, Tom Burrell, October 31, 1881.—HENRY BARNES.

Mr. H. Barnes to The Secretary, Australian Museum.

Sir, Wellington, New South Wales, 3 November, 1881.

I have sent the men's vouchers signed as soon as I could.

It so happened the day they came one of our men was away, and he had to put another one on in his place, or I would have sent them the same day. I sent Mr. Ramsay a telegram yesterday informing him that I had posted them, so I suppose you have them before this.

The boy, James Sibbald, came to work on the 15th of August, 1881, and finished on the 1st of November, 1881. He will be content with 10s. a week.

I have, &c.,
HENRY BARNES.

The Under-Secretary, Department of Public Instruction, to The Secretary, Australian Museum.

Sir, Department of Public Instruction, Sydney, 5 November, 1881.

I am directed by the Minister of Public Instruction to transmit herewith a copy of an address of the Legislative Assembly for certain information respecting exploration of caves and rivers, and to request that the Trustees of the Australian Museum will be good enough to furnish copies of all documents in their possession on the above subject.

I have, &c.,
W. WILKINS,
Under-Secretary.

---

4. EXPLORATION OF CAVES *(Formal Motion)*:—Mr. William Forster moved, pursuant to notice, that an Address be presented to the Governor, praying that his Excellency will be pleased to cause to be laid upon the table of this House,—
   (1.) Copies of all minutes of any Minister, or of the Agent-General in England; and of all correspondence between the Executive Government and the Agent-General, or the Trustees or Secretary of the Sydney Museum, or any other person or persons, having reference to the expenditure of public money for the purposes of exploration of caves in this colony containing the remains of extinct animals, or of collecting specimens or remains of extinct or existing Australian fishes.
   (2.) A Return showing in detail any expenditure of money voted or appropriated for the purposes above specified.

   Question put and passed.

The Secretary, Australian Museum, to Dr. Cox.

Dear Sir, Australian Museum, Sydney, 11 November, 1881.

I think it my duty to inform you of the following facts, as you are Chairman of the Committee for the Exploration of Caves and Rivers.

On the 10th August instructions were sent to Mr. Jenkins to proceed to Coodradigbee. A draft for £25 and six railway passes were sent to him with a request that he would forward a statement of his expenses so as to reach Sydney before the last day of each month, also that he would state when and where the railway passes were used. The latter has not yet been done.

Mr. Jenkins forwarded one account for £56 4s. 4d. in his own name, including wages for two men at 8s. per day each, tent, tools, &c.

On 27th Sept. I asked Mr. Jenkins to forward his receipts that he had obtained from tradespeople for the tent, tools, &c., also his monthly memo. of smaller accounts, all of which should be charged against the advance made to him, on 10th August, of £25.

On 1st Oct. the sum of £49 17s. 4d. was paid to his credit in the Australian Joint Stock Bank, Yass Branch, being his salary of £22 13s. 4d. to 30th Sept. and wages for two workmen at £13 12s. each to the same date. Three sets of vouchers were forwarded which Mr. Jenkins was asked to have signed and returned.

This has not yet been done nor has the letter been acknowledged.

On the 26th Oct. Mr. Jenkins was instructed to proceed to Cowra; he was again asked for information concerning the railway tickets, also for his vouchers and statement of accounts. No reply has yet been received.

The last report from Mr. Jenkins was dated 28th Oct., 1881, and his weekly reports are not quite so regular now as previously. The

The period for which Mr. Jenkins was engaged by the Committee, viz., three months, will terminate on Wednesday, 23rd Nov., 1881.

I have this morning telegraphed to Mrs. Jenkins, at Yass, to ask where her husband is, and if he has yet proceeded to Cowra.

The salary and wages for Oct. I have not forwarded to Mr. Jenkins pending his receipts and statement of accounts for previous months.

On 31st October Mr. Ramsay telegraphed to Mr. Jenkins only to employ one man and asking when he would be at Cowra. No reply has been received.

I am, &c.,
CHARLES R. BUCKLAND.

I have shown this to Sir Alfred Stephen who advised me to forward it to you. I have kept no copy so will you kindly return it with any remarks you may wish to make.—C.R.B.

Nov. 11th, 1881.—Summon a meeting of the Committee for the Exploration of Rivers and Caves for Monday afternoon next at 4·30 p.m.—J. C. Cox.

Telegram from Secretary, Australian Museum, to Mr. C. Jenkins.

11 November, 1881.

WHERE is Mr. Jenkins;—has he yet gone to Cowra?

C. R. BUCKLAND,
Secretary.

Telegram from Secretary, Australian Museum, to Mr. E. P. Ramsay.

11 November, 1881.

MEETING Caves and Rivers Committee Monday afternoon *re* Jenkins.

C. R. BUCKLAND,
Secretary.

Telegram from Mr. C. Jenkins to Secretary, Australian Museum.

Yass, 12 November, 1881.

As instructed left Coodradigbee 10th; arrived here for Cowra late last night; skeleton secured; fossil bones and report on Monday.

CHAS. JENKINS.

Telegram from Secretary, Australian Museum, to Mr. C. Jenkins.

12 November, 1881.

WHEN will you be at Cowra? What will your address be?

C. R. BUCKLAND,
Secretary, Australian Museum.

Telegram from Curator, Australian Museum, to Secretary, Australian Museum.

12 November, 1881.

TELL Barnes to get Jenkins' bones and stones out for Dr. Cox to see. Post me to-night two railway pass forms; want me back.

E. P. RAMSAY,
Curator.

Telegram from Secretary, Australian Museum, to Mr. H. Barnes.

Wellington, 13 November, 1881.

WHEN did each man leave off work? Have all finished?

C. R. BUCKLAND,
Secretary, Australian Museum.

Telegram from Curator, Australian Museum, to Secretary, Australian Museum.

14 November, 1881.

LAST man left off work on Tuesday night. Will bring particulars of each man down. Leave to-night.

E. P. RAMSAY,
Curator.

Telegram from Secretary, Australian Museum, to Mr. C. Jenkins.

14 November, 1881.

Do not go to Cowra. Send reports, specimens, accounts, and wait instructions.

C. R. BUCKLAND,
Secretary, Australian Museum.

The

The Secretary, Australian Museum, to Mr. C. Jenkins.

Sir, Australian Museum, 14 November, 1881.

I have the honor, by direction of the Trustees of the Australian Museum, to acknowledge the receipt of your letter of 28th ult. and telegram of 12th inst.

I am directed by the Board of Trustees to request that you will forward without delay all the specimens that you may have obtained, with a report and accounts to the date of receipt of this letter. As the period for which your services were engaged will expire on the 23rd inst. it has been decided that you should not proceed to Cowra. I telegraphed to you this evening to delay your departure.

In your accounts you will please include your salary to 23rd inst., when your engagement with the Trustees will terminate.

I have, &c.,
CHARLES R. BUCKLAND,
Secretary.

Telegram from Curator, Australian Museum, to Mr. H. Barnes.

15 November, 1881.

CHEQUES will be posted on Wednesday. Return on Thursday night; get live tortoise left at Moss's.

E. P. RAMSAY,
Curator, Australian Museum.

The Secretary, Australian Museum, to Mr. H. Barnes.

Sir, Australian Museum, 15 November, 1881.

I have the honor, on behalf of the Trustees of the Australian Museum, to forward cheques, as under, for payment of accounts at Wellington.

Will you kindly see that the vouchers are all signed where marked in pencil, and bring them to Sydney with you.

You will leave Wellington on Thursday night as instructed by telegram from the Curator.

According to your memo., sent with Mr. Ramsay, no money is due to the workmen for wages, all having been paid to 31st October, when you state the three men last employed ceased to work.

I have, &c.,
CHARLES R. BUCKLAND,
Secretary.

Cheques forwarded.

	£	s.	d.		£	s.	d.
Moss	1	10	0	Wilson and Muller	2	4	6
Wildie	1	12	10	Sum Hum Lain	2	2	0
Byrne	2	5	0	Nancarrow	1	8	9

Mr. C. Jenkins to The Trustees, Australian Museum.

Gentlemen, North Yass, 21 November, 1881.

In reply to your letter of the 14th instant, instructing me to forward accounts and reports to the 23rd instant, I have the honor to state that I had forwarded accounts up to October 30th, before your letter was received. I now have the honor to forward accounts from the 30th October to the 23rd instant.

As the tracing I sent you was hurriedly executed, in order that I might start for Cowra as soon as possible, I have since been occupied in preparing a plan which will be more satisfactory to you, and which I will forward to you in a day or two, together with my report.

In the meantime I shall esteem it a favour if you will place to my credit in the Australian Joint Stock Bank, Yass, the amount of account to October 30th.

I have, &c.,
CHARLES JENKINS.

The Secretary, Australian Museum, to Mr. C. Jenkins.

Sir, The Australian Museum, 2 December, 1881.

I have the honor, on behalf of the Trustees of the Australian Museum, to acknowledge the receipt of your letters of — October and 21st November, with enclosures.

I beg to inform you that a sum of £38 2s. 8d. has been placed to your credit at the Yass Branch of the Australian Joint Stock Bank. The vouchers for this amount are enclosed; will you kindly have them signed and returned without delay.

Enclosed please find a statement of your accounts with the Trustees, from which it will be seen that the balance due to you is £3 (three pounds). A cheque for this amount will be forwarded next week.

Will you kindly send the receipt for £1 10s., for conveyance of your party from Yass to Coodradigbee, or a certificate that you have paid this amount?

I have, &c.,
CHARLES R. BUCKLAND,
Secretary.

STATEMENT of Accounts of Mr. Charles Jenkins, on behalf of the Australian Museum, to 23rd November, 1881, inclusive.

Dr. 1881.	£	s.	d.
23rd Aug. to 30th Sept.—C. Jenkins, salary	22	13	4
,, ,, C. W. Jenkins, salary	13	12	0
,, ,, R. F. Jenkins, ,, ...	13	12	0
1st Oct. to 31st Oct.—C. Jenkins, ,, ...	17	6	8
,, ,, C. C. Jenkins ,, ...	10	8	0
,, ,, R. F. Jenkins ,, ...	10	8	0
1st Nov. to 23rd Nov.—C. Jenkins ,, ...	12	0	0
12 days, 1 man	4	16	0
Coen's account	3	18	6
Reid's ,,	0	6	8
Sundries paid by C. Jenkins	1	7	10
Conveyance ,,	1	10	0
Weston's account	1	0	0
Barry's ,,	3	1	0
	£116	0	0

Cr. 1881.	£	s.	d.
30th Sept.—Paid to account of C. Jenkins, Yass Branch A.J.S. Bank	49	17	4
2nd Dec. Do. do. ...	38	2	8
9th Aug.—Advance	25	0	0
	£113	0	0
Balance	£3	0	0

Sydney, 1st December, 1881. E. & O. E.,

The Secretary, Australian Museum, to Mr. C. Jenkins.

The Australian Museum, 2 December, 1881.

Sir,

I have the honor, on behalf of the Trustees of the Australian Museum, to enclose for signature vouchers for your own salary, £12, to 23rd ultimo, and for one man for twelve days, at 8s., of £4 16s.

Will you kindly return them without delay, thus completing all vouchers required from you, excepting that for £1 10s. for conveyance of property to Coodradigbee. The balance due to you, £3, will be paid to your credit next week.

I have, &c.,
CHARLES R. BUCKLAND,
Secretary.

Mr. C. Jenkins to The Trustees, Australian Museum.

North Yass, 6 December, 1881.

Gentlemen,

I have not yet been able to complete the plan that I proposed furnishing. I will, however, complete it as quickly as possible, and transmit it to you.

If it is desired, I can procure for you presently some perfect skeletons of aborigines without further expense to the Museum than carriage.

I obtained the others as quickly as I could, but it was impossible to get them without it being known to a few.

Some talk has been made about it, and a few of the blacks about here have been told and are annoyed.

I propose to wait, therefore, a little before I obtain any more.

I have, &c.,
CHARLES JENKINS.

The Secretary, Australian Museum, to Mr. C. Jenkins.

The Australian Museum, 4 March, 1882.

Sir,

In reply to your letter of 6th December last, offering to procure some perfect skeletons of aborigines without further expense to the Museum than carriage, I have the honor, by direction of the Trustees, while thanking you for your offer, to inform you that such skeletons are not required.

I have, &c.,
CHARLES R. BUCKLAND,
Secretary.

Mr. C. Jenkins to The Trustees, Australian Museum.

North Yass, 6 December, 1881.

Gentlemen,

I have the honor to return, under separate cover, vouchers for £38 2s. 8d., and for £16 16s., under separate cover.

I have enclosed also voucher for conveyance from Bowning to Coodradigbee.

I have, &c.,
CHAS. JENKINS,
Licensed Surveyor.

Telegram from Mr. C. Jenkins to Secretary, Australian Museum.

Yass, 6 December, 1881.

VOUCHER received—returned by to-night's mail.

CHAS. J. E. JENKINS.

The

The Secretary, Australian Museum, to Mr. C. Jenkins.

Sir, The Australian Museum, 8 December, 1881.

I have the honor, on behalf of the Trustees of the Australian Museum, to inform you that the sum of £3, the balance due to you by the Trustees, has been paid to your credit in the Yass branch of the Australian Joint Stock Bank.

Will you kindly sign the enclosed voucher and return it; also supply me with the dates on which your Railway passes were used, returning such as you may not have required. The tent, tools, &c., purchased by you should be returned to the Museum through Messrs. Wright, Heaton, & Co.

Your letters of 6th instant, with enclosures, were duly received.

I have, &c.,
CHARLES R. BUCKLAND,
Secretary.

The Curator, Australian Museum, to The Trustees, Australian Museum.

Extract from The Curator's Report.

Gentlemen, 6 December, 1881.

I have the honor to report to you that, in consequence of the vote for the exploration of caves and rivers being nearly expended, I have discontinued work at the caves at Wellington, and on the 8th of November paid off all the men employed there. Mr. Jenkins, of Yass, discontinued work on the 23rd ultimo. The exploration of rivers is still being continued by Alex. Morton on the Richmond River, and after trying the Tweed River during the present month he will return to Sydney, unless otherwise instructed by the Committee.

I have, &c.,
E. P. RAMSAY,
Curator.

The Secretary, Australian Museum, to Mr. J. Sibbald.

Sir, Australian Museum, Sydney, December 17, 1881.

I have the honor, on behalf of the Trustees of the Australian Museum, to enclose a P. O. order for £8 8s., in payment of the wages accounts of Byrne, Burrell, and yourself, until the termination of your engagement with the Trustees.

Will you kindly sign the enclosed vouchers for yourself, and obtain the signatures of Byrne and Burrell to their vouchers, each in the four places marked with pencil, returning the vouchers without delay. The amount due to each of you is £2 16s.

I have, &c.,
CHARLES R. BUCKLAND,
Secretary.

Mr. J. Sibbald to The Secretary, Australian Museum.

Sir, Wellington, 19 December, 1881.

I have, as you requested, given Byrne and Burrell their money, and received my own, and many thanks, from your humble servant.

I have, &c.,
JAMES SIBBALD.

Telegram from Curator, Australian Museum, to Mr. C. Jenkins.

Sydney, 20 December, 1881.

HAVE you received Secretary's letter of 8th December? Please reply thereto.

E. P. RAMSAY,
Curator, Australian Museum.

Secretary, Australian Museum, to The Under-Secretary, Department of Public Instruction.

Sir, Australian Museum, Sydney, 22 December, 1881.

I have the honor, on behalf of the Trustees of the Australian Museum, respectfully to request your attention to my letter addressed to you, of 12th July last, asking that a copy of all correspondence on the subject of the exploration of caves and rivers, subsequent to the year 1870, might be obtained for the information of the Trustees.

I have, &c.,
CHARLES R. BUCKLAND,
Secretary.

The Secretary, Australian Museum, to Mr. C. Jenkins.

Sir, Australian Museum, Sydney, 3 January, 1882.

I have the honor, by direction of the Trustees of the Australian Museum, respectfully to draw your attention to my letter of 8th ultimo, requesting information concerning the railway passes issued to you; also the return of the tent, tools, &c., purchased by you on behalf of the Museum.

The Trustees desire me to request your immediate attention to these matters, and so avoid any further trouble and proceedings.

I have, &c.,
CHARLES R. BUCKLAND,
Secretary.

Mr.

Mr. C. Jenkins to The Trustees, Australian Museum.

Gentlemen, North Yass, 5 January, 1882.

I have the honor to acknowledge the receipt of your letter of the 3rd instant. The request contained therein shall have immediate attention. I have, &c.,

CHAS. JENKINS.

Curator's Report on the Exploration of Caves.

31 December, 1881.

At a meeting of the Board, held on the 7th of June, 1881, it was decided that the exploration of the caves and rivers of this Colony and Queensland was to be commenced with as little delay as possible, and I was instructed to engage suitable men and obtain the necessary outfits, which was accordingly done, although we found considerable difficulty in obtaining suitable persons for the work. Considerable delay in the exploration of the rivers was caused by a point being raised as to whether the money voted could be spent outside the Colony of New South Wales. It was finally decided that Mr. Jenkins, of Yass, was to be instructed to explore the caves in his district, and that Henry Barnes be sent to carry out instructions at the Wellington Caves.

Mr. Jenkins' reports will speak for themselves. I have only one remark to make respecting the bones obtained in the caves. It is to be regretted that they are of so recent an origin.

On examination I find they all belong to still existing species of kangaroos, wallabies, opossum, wombats, &c.

The silurian fossils from the limestone rocks collected by Mr. Jenkins are of considerable interest, but as yet most of them are undetermined; they will however form a valuable addition to our Museum collection.

Barnes commenced work at the caves in the Wellington Valley on the 12th of July, 1881, and I shortly afterwards visited the place and found it necessary to put on more men. After examining all the caves open in the large limestone ridge near the Bell River, we decided to number them for future reference in accordance with their proximity to the river.

No. 1, the nearest to the Bell River, we found contained several feet of water over the floor, and could not be worked for bones without considerable expense.

No. 2 showed no signs of bone breccia, and gave no encouragement to continue our search there.

In No. 3, known as the Breccia Cave, we found the walls composed of large boulders and rocks of bluish limestone intersected with large deposits of red bone breccia.

The entrance is down a perpendicular shaft by means of rude ladders for about 30 feet, then by squeezing your body in between narrow crevices, and finally through an oval hole in a solid block of limestone you reach a low chamber, the roof and sides of which are composed of red bone breccia and limestone boulders. Believing that this deposit extended to the very surface of the ground, a shaft was commenced immediately over the chamber, and at a foot or two from the surface we met with small bones and fragments of larger ones.

This shaft, 6 feet in diameter, was continued until we reached the chamber at the end of the cave; many interesting and valuable specimens were obtained in the sinking, and many more from the chamber itself, the bottom of which is at present 45 feet from the surface.

All the large bones which appeared were cut out, and the debris sifted to secure the smaller ones; by these means several *hundreds* (if I count the small ones I may say *thousands*) of specimens have been secured, many of them of great interest and value.

Among the most important from this shaft I may mention an almost perfect *ramus* of *Thylacoleo*, with the articulating condile so anxiously looked for by Professor Owen, and the toe-bones of a large species of *Echidna*. The list of specimens appended will show the most important bones obtained in the shaft and chamber.

Having got the work at this shaft systematically commenced, I turned my attention to cave No. 4, known as the large cave, the opening of which is situated almost at the summit of the ridge. The entrance to this cave is by a narrow passage on either side of a large boulder of limestone which forms a pillar at the mouth.

The floor, very irregular, slopes gradually until a large and roomy chamber is reached, varying from 20 to 100 feet in width and about 40 feet in height. At the end of this is the large column of limestone known as the "Altar"; this is about 18 feet in diameter at the bottom and reaches to the roof, having been formed by the meeting of a large stalagmite and stalactite. The walls of this large chamber are composed of curiously formed blocks of limestone, having the appearance of a coarse rubble-built wall, and of which we took photographs by the magnesium light.

As no traces of bones had been obtained in this cavern, but finding the floor composed of reddish earth and water-worn stones, I caused a shaft to be sunk (No. 1 C. IV); at the entrance to the large chamber at a depth of 8 feet, amongst loose stones, &c., the tooth of a *diprotodon* was found, and near the bottom a large number of smaller bones of rats and small species of marsupials matted together.

Other shafts were sunk in various parts of this chamber (finding the bottom of which consists apparently of solid limestone rock) shelving off from 10 feet (No. 1 shaft) to 35 feet in the shaft sunk at the foot of the "Altar."

In all the shafts bones were found, but they were not plentiful, rather scattered through the whole mass, but in some places closer together than in others, and in patches. They are all in more perfect condition than those from cave No. 3, and on the whole are larger bones, consisting of large pieces of the pelvis of an immense kangaroo, caudal and cervicle vertebræ, jaws of various large marsupials, notably five *ramii* of *Thylacoleo*, nearly perfect, and many beautiful teeth.

A list of the most important of these specimens is appended.

I left Henry Barnes in charge of the men employed, visiting Wellington myself whenever I could conveniently get away from the Museum. During my visits I examined all the so-called caves in the district, many of them being merely large narrow crevices, probably formerly the entrances to large caves now filled up. The only ones which showed any signs of bones were two on the Nannina Estate, situated about 6 miles to the eastward of Wellington. One of these we entered by ropes to the depth of 40 feet through

through a narrow crevice. A very narrow chamber was then reached, ranging from 5 to 10 feet wide, and extending about 80 feet in length. On the bottom of this a few small bones and fragments were obtained, but not of sufficient importance to induce further search.

In the other, a somewhat similarly formed crevice, a ledge was reached at 35 feet from the top, but no exploration was attempted, as the cave was full of foul air. The candles, and even the torches, were extinguished on being lowered below the waist of the man sent down.

Work was continued in the large cave (C. No. IV.) by Barnes and the men until the 8th of November, 1881, when, finding the vote nearly expended, he was recalled, returning to Sydney on 19th November, and the work discontinued.

Remains of the following animals have been obtained, but a more detailed account can be given when all the bones have been cleaned and identified.

Since Barnes' return he has been chiefly engaged in cleaning and sorting these bones, but the work will be necessarily long, as the removal of a soft bone from the flinty substance in which for the most part they are encased, can only be proceeded with with care and caution.

Photographs have been taken of the most interesting portions of the caves and limestone ridges visited. (See Appendix II.)

I have the honor to submit this progress report, gentlemen, and trust that our researches may be continued as soon as the vote for the purpose becomes available, and remain,

Yours, &c.,
E. P. RAMSAY.
Curator.

The Trustees, Australian Museum, Sydney.

APPENDIX I.

LIST OF FOSSIL ANIMALS, THE REMAINS OF WHICH ARE REPRESENTED BY BONES FOUND IN THE CAVES AT WELLINGTON, N.S.W.

Mammals.

Diprotodon Australis, C. III. and IV.
Sthenurus, 2 sp., C. III.
Protemnodon, og., C. III. and IV.
Protunnodon anack, C. III. and IV.
Protemnodon sp.
Palorchestes sp., C. IV.
Macropus several sp., C. III. and IV.
Halmaturus several sp., C. III.
Betongia.
Thylacinus sp., C. III. and IV.
Phascolomys, C. III. and IV.
Sarcophillus, C. III.
Dasyurus, 2 sp., C. III.
Phalangista, C. III.
Thylacoleo carnifex, C. III. and IV.
Portion of an upper jaw and several lower rami.
Echidna, C. III.
Shoulder-blade and claw bones.
Ornithorhynchus, C. III.
One claw bone only.
Mus, several sp. C. III. and IV.

Birds.

These are represented by portions of the tarso-metatarsal bones, belonging to carinate birds; a portion of the tarso-metatarsus of a bird allied to the Emu; one or two doubtful ungual phalanges, probably raptorial; and a sternum of a small carinate bird. C. III. and IV.

Reptiles.

Vertebræ of a large lizard, Hydrosaurus sp.; jaws of a lizard allied to Cyclodus, vertebræ of the same.
Jaws of small lizards. C. III.

Mollusca.

Remains of 2 species of Helix, tolerably perfect. C. III., 1 sp.; C. IV., 2 sp.

(There are also over 1,000 specimens of Fossils not yet determined.)

APPENDIX II.

PHOTOGRAPHS of the Limestone Caves at Wellington, and some of the most important fossil bones obtained there :—

Nos.
513-1/5. General View of the Limestone Hill at Wellington.
514. Entrance to Cave No. 1.
515. ,, No. 2.
516. ,, Breccia Cavern, Cave No. 3 (looking down).
517. ,, Cave No. 4.
518. Camp on the Limestone Ridge.
519. Limestone Boulders near the Caves.
520. Eastern Wall of Cave No. 4, showing portion of the floor.
521. ,, ,, (portion).
522. ,, ,, ,,
523. Part of Stalagmite Column in Cave No. 4.
524. North Entrance to Cave at Boree, near Orange.
528. Carved Tree near an Aboriginal's Grave.
529. ,, ,,
530. Portion of Pelvis of a large Kangaroo, Palorchoestes sp.
540. Portion of the left side of the upper jaw of a Thylacoleo, showing incisors, canine, præmolar, and molar teeth.
541. Skull of a gigantic Kangaroo, Macropustitan (under view, showing the teeth.)
542. ,, ,, (upper view, showing top of the skull.)
547. Inside view of mandibles of Thylacoleo and condile of the lower jaw.
548. Portion of the pelvis of a large Kangaroo (Palorchœstes sp.)
550. Lower jaws of Thylacoleo.
551. ,,
552. Outside view of pelves of extinct Marsupials (undetermined).
553. Inside ,, ,, ,,
554. Ullna and radius of Thylacoleo.
End view of the ullna of Thylacoleo.
555. Pelvis (nearly perfect) of a large species of Thylacinus.
556. Base of the skull of a large Macropus.
557. Top view of the skull of a large Macropus.
567. Head or proxinal end of radius of Thylacoleo.

The

The Secretary, Australian Museum, to Dr. Cox.

Dear Sir, Australian Museum, 1 February, 1882.

Will you kindly give the bearer the list of fossil bones obtained at Wellington Caves which Mr. Ramsay lent to you?

I am, &c.,
CHARLES R. BUCKLAND,
Secretary.

Memorandum from Secretary, Australian Museum, to Professor Liversidge.

Dear Sir, 26 February, 1882.

Dr. Cox wishes that a meeting of the Committee on Caves and Rivers should be held, and that you would name an afternoon at 4·30 when you could attend. If convenient to you I should prefer Friday.

I am, &c.,
C. R. BUCKLAND,
Secretary.

Friday will suit me, but I should prefer next Tuesday before the meeting of Trustees.—A.L., 28/2/82.

Memorandum from Secretary, Australian Museum, to Dr. Cox.

Dear Sir, 28 February, 1882.

Professor Liversidge will be glad to attend a meeting of the Caves and Rivers Committee on Friday at 4·30 p.m., or on Tuesday before the ordinary meeting of the Trustees.

Shall I call it for Tuesday at 3·30 p.m.?

I have, &c.,
CHARLES R. BUCKLAND,
Secretary.

I cannot attend on Tuesday. Call it for 4·30, Friday.—J. C. Cox.

Memorandum from Professor Liversidge to The Secretary, Australian Museum.

Dear Sir, 21 March, 1882.

I am sorry to say that I cannot well attend the meeting of the Committee (Caves and Rivers) nor of the Trustees.

Yours truly,
A. LIVERSIDGE.

The Secretary, Australian Museum, to The Under-Secretary of Public Instruction.

Sir, The Australian Museum, Sydney, 15 July, 1881.

I am directed by the Trustees of the Australian Museum to inform you that permission to explore the caves in New South Wales has been received from the Hon. the Minister for Mines.

As the Trustees are desirous of exploring the rivers of New South Wales they will feel obliged to the Minister of Public Instruction if he will kindly obtain, if necessary, permission from the Harbours and Rivers Department for the Trustees to undertake such explorations as they may think desirable.

I have, &c.,
CHARLES R. BUCKLAND,
Secretary.

The Under-Secretary of Public Instruction to The Secretary, Australian Museum.

Sir, Department of Public Instruction, Sydney, 26 July, 1881.

With reference to your letter, dated the 15th July instant, in which you state that the Trustees of the Australian Museum will be glad if permission can be obtained from the Harbours and Rivers Department for the Trustees to undertake such explorations of the rivers of this Colony as they may deem desirable, I am directed to acquaint you that the matter has been referred to the Department of Public Works, with a view to the necessary authority being given.

I have, &c.,
W. WILKINS,
Under-Secretary.

The Under-Secretary of Public Instruction to The Secretary, Australian Museum.

Sir, Department of Public Instruction, Sydney, 19 August, 1881.

With reference to your letter of the 15th July ultimo, respecting the desire of the Trustees of the Australian Museum to explore the rivers of New South Wales, I am directed to acquaint you that a memorandum has been received from the Under-Secretary of Public Works, stating that every facility will be afforded by the Harbours and Rivers Department to the Trustees to enable them to undertake such explorations as they may think desirable.

I have, &c.,
W. WILKINS,
Under-Secretary.

The Secretary, Australian Museum, to The Under-Secretary of Public Instruction.

Sir, The Australian Museum, Sydney, 25 July, 1881.

I am directed by the Trustees of the Australian Museum to inform you that they are desirous of exploring the rivers and caves of Queensland, and for this purpose they wish to obtain maps and charts of the rivers of Queensland, with railway passes and permission to shoot, for such men as may be sent on the expedition.

The Trustees hope that the Minister of Public Instruction will kindly take the necessary steps for asking the Queensland Government to comply with their wishes.

I have, &c.,
CHARLES R. BUCKLAND,
Secretary.

Mr.

Mr. G. Solomon to The Curator, Australian Museum.

Sir, Government Boat-shed, 1 August, 1881.

I agree to make a meshing net, 50 fathoms long, of 3-inch mesh, out of the best herring twine, leads to be 3 feet apart, and corks to be 6 feet apart, and to be 14 feet deep, for the sum of thirteen pounds (£13).

I have, &c.,
GEORGE SOLOMON.

The Curator, Australian Museum, to The Trustees, Australian Museum.

27 August, 1881.

I HAVE the honor to recommend that Solomon's tender for a meshing net be accepted, according to the specifications set forth in his letter or tender of 1st August, 1881.

ED. P. RAMSAY,
Curator, Australian Museum.

The Curator, Australian Museum, to The Trustees, Australian Museum.

Gentlemen, The Australian Museum, 4 October, 1881.

I have the honor to report to you that in accordance with your instructions I have sent Morton to the Richmond River on the "Exploration of Rivers," and fitted the expedition with a suitable boat, nets, and other requisite gearing.

The boat I bought of Mr. Ireland for the sum of £30 (thirty pounds), and the line of Mr. Cook for £20.

The boat is a first-class fishing-boat, of cedar, 20 feet in length, copper-fastened, with centre-board, and having sails, paddles, &c., and all necessary fittings. The net is of the best herring twine (quite new), 80 fathoms in length, and about 15 feet deep.

I have also purchased a cask of spirits, to have on hand in the case of emergency.

I have, &c.,
E. P. RAMSAY,
Curator.

The Curator, Australian Museum, to Dr. Manning.

Sir, The Australian Museum, 6 October, 1881.

I shall consider it a favour if you will allow William Cook, of H.M.S.S. "Mabel," two months' leave of absence, in order that I may send him on special service (O.H.M.S.) to the Richmond River in charge of our boats *re* "Exploration of Rivers."

I have, &c.,
E. P. RAMSAY,
Curator.

Dr. Manning to The Curator, Australian Museum.

Dear Ramsay, 7 October, 1881.

The coxswain of the "Mabel" is on the staff of the Marine Board. Our connection with him only consisting in providing money on our Estimates for his pay.

I neither sign his vouchers, nor do I censure him in case of misconduct, taking the cause of complaint to Captain Hixson. Under these circumstances I cannot possibly take the responsibility of giving him leave of absence. Captain Hixson is, I have just found, away, as is also Mr. Lindeman.

Had he been at home I would not only have raised no objection but would have endeavoured to meet your wishes by letting my own man, with Captain Hixson's approval, take Cook's place.

In his absence, and as I learn from Cook that your expedition starts almost at once, I fear you will have to get some one else. Pray excuse a hastily-written note in this form.

I have, &c.,
F. NORTON MANNING.

Telegram from Secretary, Australian Museum, to Curator, Australian Museum.

8 October, 1881.

COOK cannot go. Dr. Manning has no power to grant permission.

C. R. BUCKLAND,
Secretary.

Telegram from Secretary, Australian Museum, to Curator, Australian Museum.

8 October, 1881.

SHALL I telegraph to Captain Hixson at Tweed for Cook's permission?

C. R. BUCKLAND,
Secretary.

Telegram from Curator, Australian Museum, to Secretary, Australian Museum.

Wellington Station, 8 October, 1881.

WRITE Manning that Hixson has left it in his hands entirely. Get his answer,

E. P. RAMSAY.

The

The Secretary, Australian Museum, to Dr. Manning.

Sir, The Australian Museum, 8 October, 1881.

I beg to acknowledge the receipt of your note of the 7th instant to Mr. Ramsay, who left for Wellington last night.

I telegraphed to him—"Cook cannot go; Dr. Manning has no power to grant permission," and received the following reply:—"Write Dr. Manning that Hixson has left it in his hands entirely. Get his answer."

Will you kindly telegraph to me on the subject?

I have, &c.,
CHARLES R. BUCKLAND,
Secretary.

Mr. G. Poole to The Curator, Australian Museum.

My Dear Mr. Ramsay, Government Boat Shed, 11 October, 1881.

I have seen Dr. Manning respecting William Cook going on this expedition to the North. He will not give his sanction to it, as Captain Hixson is absent from Sydney, and from the tone of both they do not wish him to go. If he did I fear he would lose his situation altogether. I did all that was possible for him to go by saying that he had a trustworthy man to take his place, but it was of no avail. I am very sorry that you should be inconvenienced at this decision.

I have, &c.,
GEORGE POOLE.

Telegram from Dr. Manning to Secretary, Australian Museum,

Hunter's Hill Station, 11 October, 1881.

Cook is on Captain Hixson's staff and I decline to take any responsibility.

F. NORTON MANNING.

Telegram from Secretary, Australian Museum, to Curator, Australian Museum.

11 October, 1881.

Doctor Manning declines to take responsibility.

CHARLES R. BUCKLAND,
Secretary.

Dr. Manning to Secretary, Australian Museum.

Dear Sir, Lunacy Department, Inspector General's Office, Gladesville, 11 October, 1881.

I regret that owing to absence from home I was not able to telegraph in reply to your letter till this morning.

I am sorry not to be able to comply with your wishes, but it would be contrary to all official practice for me to grant leave to an employee of another department. Besides this I am sitting on a Commission with Captain Hixson and have seen him almost daily for several hours and he never once mentioned the subject.

The man Cook only comes under me in a casual sort of way; he is distinctly a servant of the Marine Board, told off to do duty in connection with my Department.

I have, &c.,
F. NORTON MANNING.

Telegram from Mr. A. Morton to Curator, Australian Museum.

Woodburn Station, 11 October, 1881.

Tell Cook to land the boat, himself, and effects at Morrison's Wharf. I will meet him, and work the river from there up to Lismore.

A. MORTON.

Telegram from Mr. A. Morton to Curator, Australian Museum.

Woodburn Station, 14 October, 1881.

When does Cook leave?—Coraki arrived last night; no letters. Please telegraph when he leaves so that I can meet him at Morrison's Wharf. Reply.

A. MORTON.

Telegram from Secretary, Australian Museum, to Mr. A. Morton.

14 October, 1881.

Cook cannot go. Ramsay at caves; will return on Monday.

CHARLES R. BUCKLAND,
Secretary.

The

The Secretary, Australian Museum, to Mr. J. F. Bailey.

Sydney, 16 October, 1881.

Sir,

I have the honor, by direction of the Trustees of the Australian Museum, to acknowledge the receipt of your letter of 24th instant, applying for an appointment.

In reply thereto I beg to inform you that the Curator has been authorised to engage your services to assist in the explorations of rivers, at a salary of £4 (four pounds) per week.

I have, &c.,
CHARLES R. BUCKLAND,
Secretary.

Telegram from Curator, Australian Museum, to Mr. J. F. Bailey.

Sydney, 18 October, 1881.

SHALL be glad if you will go fishing for two months; boats, nets, everything ready; can you come at once?

E. P. RAMSAY,
Curator, Australian Museum.

Telegram from Curator, Australian Museum, to Mr. H. Morton.

Sydney, 19 October, 1881.

Do best you can until man arrives. Boat, traps, next steamer; set meshing net across river; engage man help you meantime; about 8s. a day.

E. P. RAMSAY,
Curator, Australian Museum.

Mr. A. Morton to The Curator, Australian Museum.

Richmond River, 20 October, 1881.

Sir,

I am sending per s.s. "Lismore" two cases; one contains a live carpet snake, the other two drums with fishes. Kindly send me back some drums with spirits.

I have, &c.,
ALEX. MORTON.

The Secretary, Australian Museum, to Mr. A. Morton.

Australian Museum, Sydney, 31 October, 1881.

Sir,

I have the honor, on behalf of the Trustees of the Australian Museum, to enclose P. O. orders, payable at Lismore, for £10 and £7 10s. respectively, in payment of your salary, £12 10s. to date, and allowance for five weeks at £1 per week.

Kindly sign and return the enclosed vouchers without delay.

I have, &c.,
CHARLES R. BUCKLAND,
Secretary.

Telegram from Secretary, Australian Museum, to Mr. A. Morton,

Sydney, 14 November, 1881.

SEND report of your proceedings to date, and for the future every week.

C. R. BUCKLAND,
Secretary, Australian Museum.

The Secretary, Australian Museum, to Mr. A. Morton.

The Australian Museum, 14 November, 1881.

Sir,

I have the honor, by direction of the Trustees of the Australian Museum, to request that you will forward without delay for their information a report of your proceedings, from the time of your departure from Sydney up to the date of the receipt of this letter.

The Trustees further desire that you should write and post, every week, from the time of your first report, a detailed account of your proceedings.

A telegram to this effect was sent to you this evening.

I have, &c.,
CHARLES R. BUCKLAND,
Secretary.

Mr. A. Morton to The Curator, Australian Museum.

Richmond River, November, 1881.

Sir,

I beg to inform you of my work in collecting fishes in the Richmond River up to date.

I have used since I have been in this district the line, the stake, and seine net. The class of fishes that frequent this river appears to be similar to the fishes that frequent the Sydney waters. After trying next week a creek, I intend going about 30 miles from here, where I have been told the codfish have been caught. I trust I will be successful in securing specimens.

I have not come across any creeks as yet that do not run into the salt water, only swamps, and they are covered with reeds.

The great amount of rain that we have had in this district for the last two weeks has hindered me very much, causing very heavy freshes in the river. The only place the seine net can be drawn is near the mouth of the river, all the other places being deep water and steep banks, with great quantities of snags in the river. The specimens of fish I have got I have placed in very strong brine, having well salted them before placing in the brine.

The case containing specimens of fishes in spirits I sent you per s.s. "Lismore" has, I trust, reached you. The steamer was detained crossing the bar for some few days.

Any letters addressed "Woodburn Post Office" will be forwarded to me.

I have, &c.,
ALEX. MORTON.

Mr. A. Morton to The Curator, Australian Museum.

Sir, Lismore, 15 November, 1881.

I have the honor to forward you this, my report, upon my work up to date.

Shortly after my arrival from Sydney I was informed of a creek or small river where I was led to believe I should probably find the cod and other varieties of fishes. I made it my business to visit the above locality.

The means at my disposal for catching them were the stake, net, lines, and dynamite.

The collection I succeeded in obtaining at the above place consisted of about ten species, viz., the perch, cat-fish, gar-fish, bream, blackfish, and three kinds of mullet. The codfish I was unable to secure.

I forwarded a collection of the fish in spirits to you per s.s. "Lismore." Since then I engaged a man for a few days to assist me in drawing the seine net. In the main river the specimens I secured were similar to the fishes that frequent the Sydney waters.

On account of the great amount of rain there have been very heavy freshes in the river, creeks, and water-holes. As there appears to be now a break in the weather, I intend to go some distance back inland to some water-holes, where, I am told, the cod and other fresh water fishes have been caught.

The fishes I have secured since I sent you down the spirit specimens I have preserved in strong brine; but I am afraid they are also found in the Sydney harbour.

Trusting, however, that I will be able to secure specimens of the cod and others inland,

I have, &c.,
ALEX. MORTON.

Mr. A. Morton to The Curator, Australian Museum.

Sir, Ben's Hill, Richmond District, 22 November, 1881.

Having been informed by the Secretary last week that I have to forward weekly reports, I have the honor to submit this, my report, of the work I have done since my last report of the 15th inst. Since I forwarded you the above I went to this locality, using the dynamite and lines. The fish I have secured are the cod, but they seem to be very rare. However, I intend to go in a few days to the head of a creek, distant from Lismore about 100 miles, where, I trust, I will be more successful. The creeks are not navigable by boat, so I have to use horses.

Will you kindly place a small sum of money at the Bank of New South Wales to meet expenses; also please kindly forward me another bag of salt. I have, &c.,
ALEX. MORTON.

Mr. A. Morton to The Curator, Australian Museum.

Sir, Bey's Hill, 30 November, 1881.

I have the honor to forward you this my weekly report. Since my last report I proceeded about 80 miles inland in search of fresh-water fishes. I have succeeded in securing about a dozen fine specimens of codfish of different sizes, from 6 ozs. to about 8 lbs. in weight. The cod are not at all plentiful in this district. I have also got specimens of perch, mullet, and an eel-shaped tailed cat-fish from the same district.

I will forward the above by first opportunity. The dynamite I find is of very little use in the deep fresh waterholes, and owing to the logs and snags the net is of no use, so I have had to use the lines.

Kindly inform me if it is of any use remaining in this district any longer, or should I proceed to Queensland. I have, &c.,
A. MORTON.

The Secretary, Australian Museum, to Mr. A. Morton.

Sir, The Australian Museum, 1 December, 1881.

I have the honor, on behalf of the Trustees of the Australian Museum, to acknowledge the receipt of your letters of 15th and 22nd ultimo.

I beg to enclose P.O. orders for £10 and £6 10s. in payment of your salary, £12 10s. for November, and allowance for four weeks at £1 per week.

Kindly sign and return the enclosed vouchers at your earliest convenience.

I have, &c.,
CHARLES R. BUCKLAND,
Secretary.

Telegram from Curator, Australian Museum, to Mr. A. Morton.

7 December, 1881.

TRY head waters of Tweed with lines and stake-nets; get back here about Christmas; get cask and salt from storekeepers at Tweed. Send specimens home by water. E. P. RAMSAY,
Curator, Australian Museum.

Telegram from Mr. A. Morton to Curator, Australian Museum.

Lismore, 8 December, 1881.

TELEGRAM received. No communication between here and the Tweed only overland. Have made inquiries with reference to the fishes—the same as the Richmond River. If I go I shall have to engage horses. There is no communication between the Tweed and Sydney only by Brisbane. Kindly advise if shall go. Please reply.
A. MORTON.

Telegram

Telegram from Curator, Australian Museum, to Mr. A. Morton.

9 December, 1881.

TRY mouth of Richmond with seine; get nets well dried and properly packed; try for seaweeds and polyzoa. Get back Sydney about 20th.

E. P. RAMSAY,
Curator, Australian Museum.

Telegram from Curator, Australian Museum, to Mr. A. Morton.

20 December, 1881.

COME back as soon as you can conveniently do so.

E. P. RAMSAY,
Curator of Australian Museum.

Mr. A. Morton to The Curator, Australian Museum.

Sir, Sydney, 31 December, 1881.

I trust you will permit me to bring under your notice a small item of expenses incurred during my last trip to the Richmond River.

The allowance of £1 per week for difference in board and lodging was sufficient while living in or near the township, but I was obliged to incur many other expenses while travelling, for which I could not obtain vouchers; as you are aware I have to travel nearly 300 miles.

I trust you will approve of my application for some slight allowance for my travelling expenses, as I find myself considerably out of pocket thereby.

I have, &c.,
ALEX. MORTON.

Memorandum from Secretary, Australian Museum, to Mr. A. Morton.

19 January, 1882.

REFERRING to your letter of the 31st ultimo, the Trustees request that you will name what amount you consider will compensate you for expenses incurred by you when exploring the Richmond River.

CHARLES R. BUCKLAND,
Secretary.

Mr. A. Morton to The Secretary, Australian Museum.

Sir, Sydney, 6 February, 1882.

In reply to your communication of the 14th ultimo, I beg respectfully to state that the sum of £10 would recompense me for the expenses incurred during my trip to the Richmond River district.

I have, &c.,
ALEX. MORTON.

The Secretary, Australian Museum, to Mr. A. Morton.

Sir, Australian Museum, Sydney, 13 March, 1882.

In reply to your letter of 6th ultimo, stating that the sum of £10 would recompense you for expenses incurred during your trip to the Richmond River, I have the honor, by direction of the Trustees, to inform you that such sum has been granted to you.

I have, &c.,
CHARLES R. BUCKLAND,
Secretary.

EXPLORATION of Rivers—The Curator's Report, December, 1881.

To the Trustees of the Australian Museum,—

Gentlemen, The Australian Museum, Sydney, 31 December, 1881.

At a Committee Meeting held at the Museum on the 20th of September last, I was instructed by the Chairman (Dr. Cox) to send Alexander Morton to the Richmond River pending a decision from the Government as to whether any portion of the vote for exploration of caves and rivers could be expended outside the Colony of New South Wales. Accordingly, with as little delay as possible, I sent Morton on to the Richmond River with a boat, and the necessary nets, lines, and outfit.

Morton left Sydney on the 29th September, and returned on 24th December. I am glad to be able to report that the excursion has been so far successful; that nearly all the kinds of fish hitherto known to frequent the fresh waters of the river has been obtained, and also other interesting species, some of them probably new to science. The cod of the district, which Morton was particularly instructed to obtain, were found, but they were by no means plentiful. On examination I find no material differences between these and those obtained in the river Macquarie.

They are all of apparently the same species, *Oligorus Macquariensis*.

I regret to say no fishes in any way allied to the *Ganoidea Sirenoidea*, or to the *Dipnoi*, were obtained; indeed, I did not expect that any would be found, although it was advisable to search for them.

Appended is a list of the fresh-water specimens obtained, and on the table I beg to lay before you specimens of each, also the cod from Lake George and the Macquarie River, near Wellington, for comparison with those of the Richmond River.

I have also the honor respectfully to suggest that, as the object of the vote is to ascertain the existence or not of Ganoid, Sirenoid, and Dipnoid fish, the waters of the Mary, Burnett, and Burdekin rivers be searched, for I believe if such fish do exist they will be found only in the large fresh-water streams or lakes in Queensland.

I append Morton's report.

I have, &c.,
E. P. RAMSAY,
Curator.

The

The Assistant Taxidermist, Australian Museum, to The Curator, Australian Museum.

Sir, Sydney, 31 December, 1881.

I have the honor to lay before you a report of my work in collecting fishes in the Richmond River district.

I left Sydney on Thursday, the 29th of September, 1881, arriving at Lismore on the 3rd October.

On the next day I left Lismore for Dungarubba, a creek 30 miles from Ballina, where I was informed I should probably find a variety of fish.

I remained there three weeks, using the stake net, lines, and dynamite. The specimens secured were: *Belonefero*x, black bream; *Chrysophrys Australis*, tarwhine; *Chrysophrys sarba*, cat-fish; *Cindoglamis sp.*, perch; *Lates sp.*, flathead; *Platycephalus sp.*, toad-fish; *Tetrodon sp.*, whiting; *Sillago sp.*, and eels.

After working this river or creek out, I tried the adjacent part of the river, 25 miles from Ballina, with the seine, on the 2nd and 3rd of November. The specimens were similar to those found in the Dungarabba Creek, with the exception of a few more salt-water species. From this place I went to Lismore, 75 miles from Ballina, where I was in hopes of finding the cod and other fresh-water species. Here I got the herrings, fresh-water mullet, and a species of cat-fish, *Copidoglamis, sp.*, but still no cod.

I therefore tried Wilson's and Cooper's creeks, about 50 miles by water from Lismore, and 123 miles from the mouth by river, where I was fortunate enough in securing some specimens of cod, mullet, perch, and herrings.

Acting on your telegram to return, and work by the way the mouth of the Richmond, I tried the seine at Ballina, leaving for Sydney on Thursday, 22nd December, 1881.

I have, &c.,
ALEXANDER MORTON,
Assistant Taxidermist.

APPENDIX.

LIST OF THE FISHES FOUND IN THE FRESH WATERS OF THE RICHMOND RIVER DISTRICT.

Percidæ.

1. Lates colonorum Guth., several varieties from different localities.
2. Oligorus macquariensis, Cuv. et Val., from the creeks and head waters of the Richmond River.
3. Gerres sp.

Sparidæ.

4. Chrysophrys sarba.

Triglidæ.

5. Centropogon robustus, Guth.

Trachinidæ.

6. Sillago sp.

Mugillidæ.

7. Mugil dobula.
8. Mugil sp.

Siluridæ.

9. Copidoglanis tendanus, Mitchel.
10. Arius Australis, Guth.

Scombresocidæ.

11. Hemirrhamphus intermedius.
12. Arrhamphus sp.

Clupeidæ.

13. Clupea richmondia, Macl.

Murænidæ.

14. Anguilla Australis, Richardson.

Crustacea.

1. Astacopsis serrata.
2. Astacopsis sp.
3. Palæmon ornatus.

In addition to those found in the fresh water, many of the ordinary salt-water species were obtained.

The Under Secretary of Public Instruction to The Secretary, Australian Museum.

Sir, Department of Public Instruction, Sydney, 6 June, 1882.

Adverting to your letters of the 21st June, 12th July, and 22nd December, 1881, I am directed to transmit, for the information of the Trustees of the Australian Museum, the accompanying copy of all correspondence which has taken place on the subject of "Exploration of Caves and Rivers," since the year 1870, together with a printed report, including a letter from Professor Owen to the Colonial Secretary.

I have, &c.,
W. WILKINS,
Under-Secretary.

STATEMENT of Expenditure of the Money voted for the Exploration of Caves and Rivers, 1881:—

1881.	RECEIPTS.	£	s.	d.
Dec. 31	To Receipts from the Colonial Treasurer	600	0	0
„	Balance	3	9	3
		£603	9	3

1881.	EXPENDITURE.	£	s.	d.
Dec. 31	By Salaries and wages	308	4	6
„	Cartage and trainage	26	0	7
„	Travelling expenses	64	12	0
„	Exchange, postage, telegrams	1	4	6
„	Purchase of boat	30	0	0
„	„ nets	35	7	6
„	„ white spirits	20	8	0
„	„ tents, camp fittings, tools, working materials	117	12	2
		£603	9	3

[Plans, &c.]

Sydney: Thomas Richards, Government Printer.—1882.

[20s.]



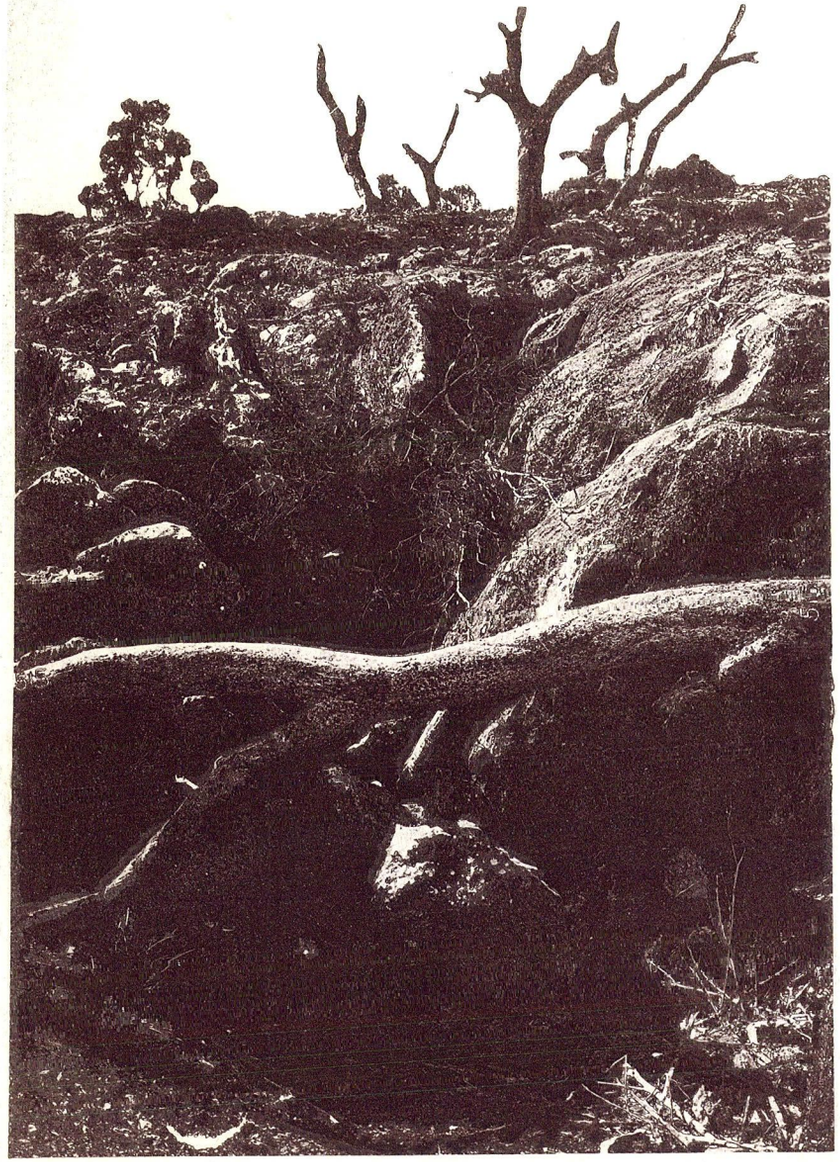





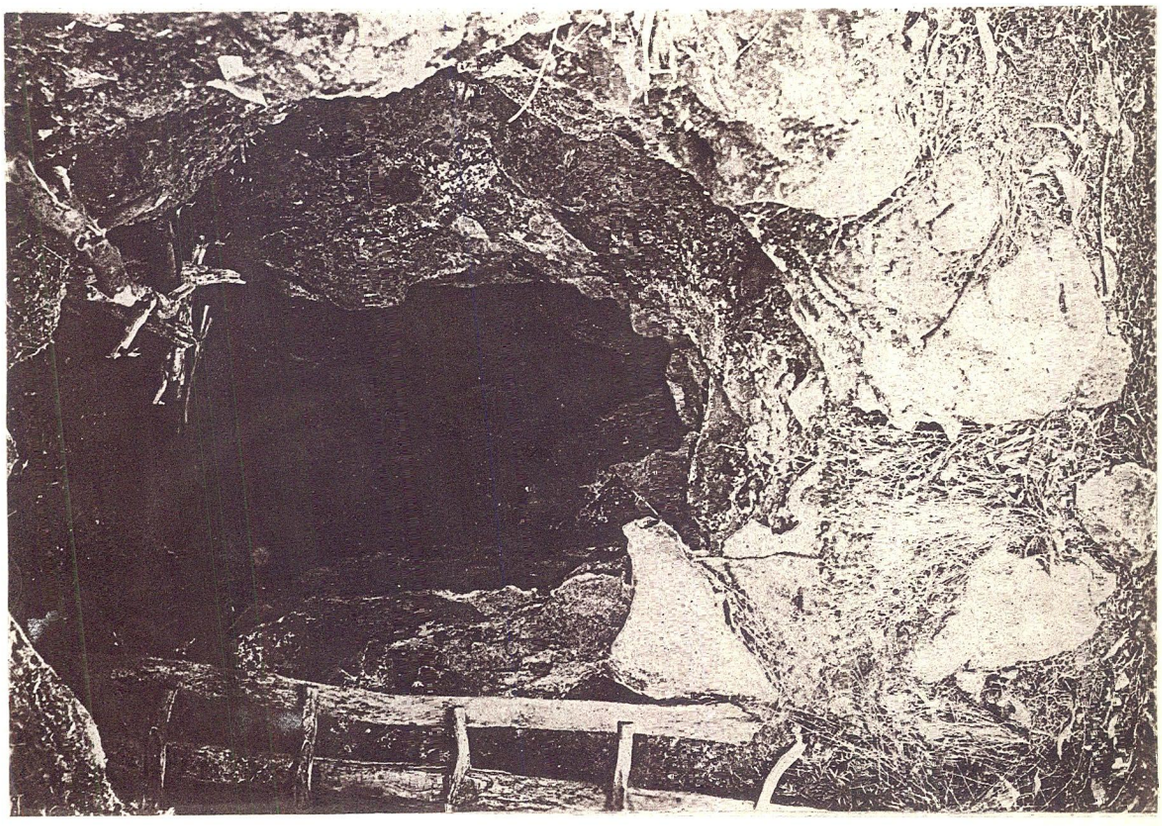









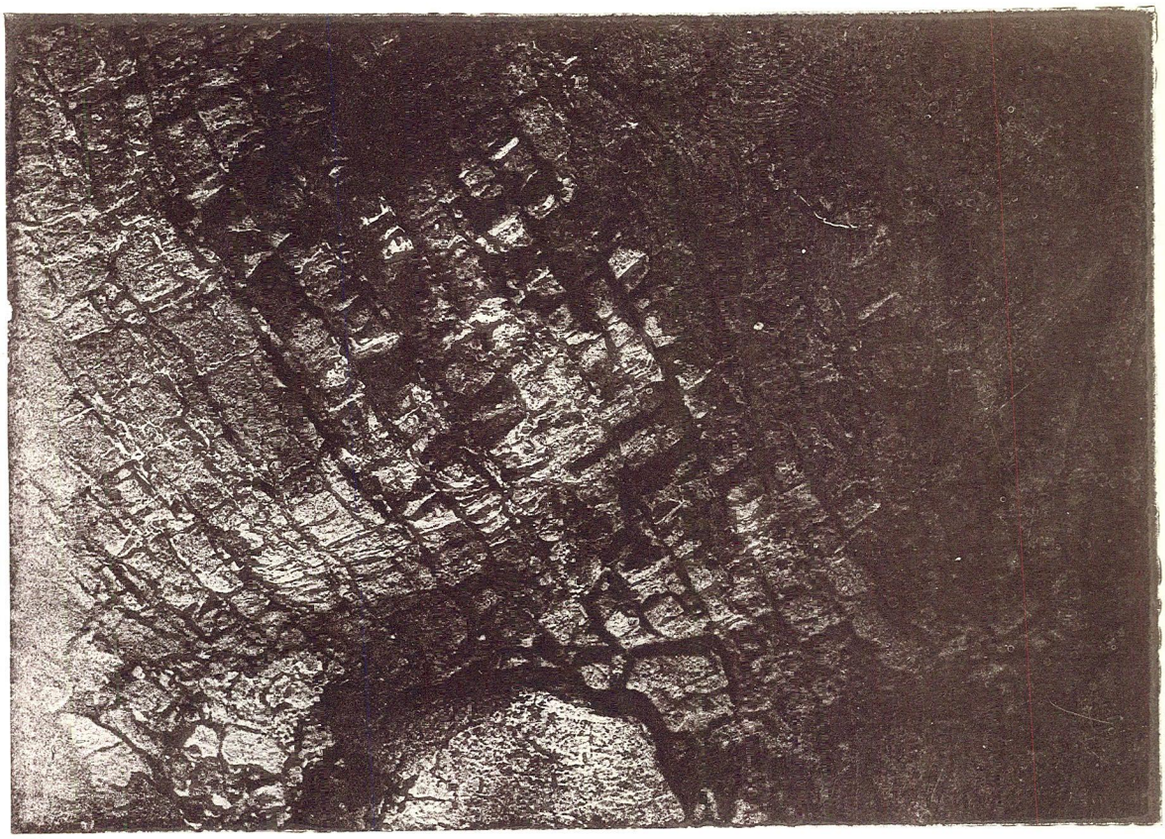

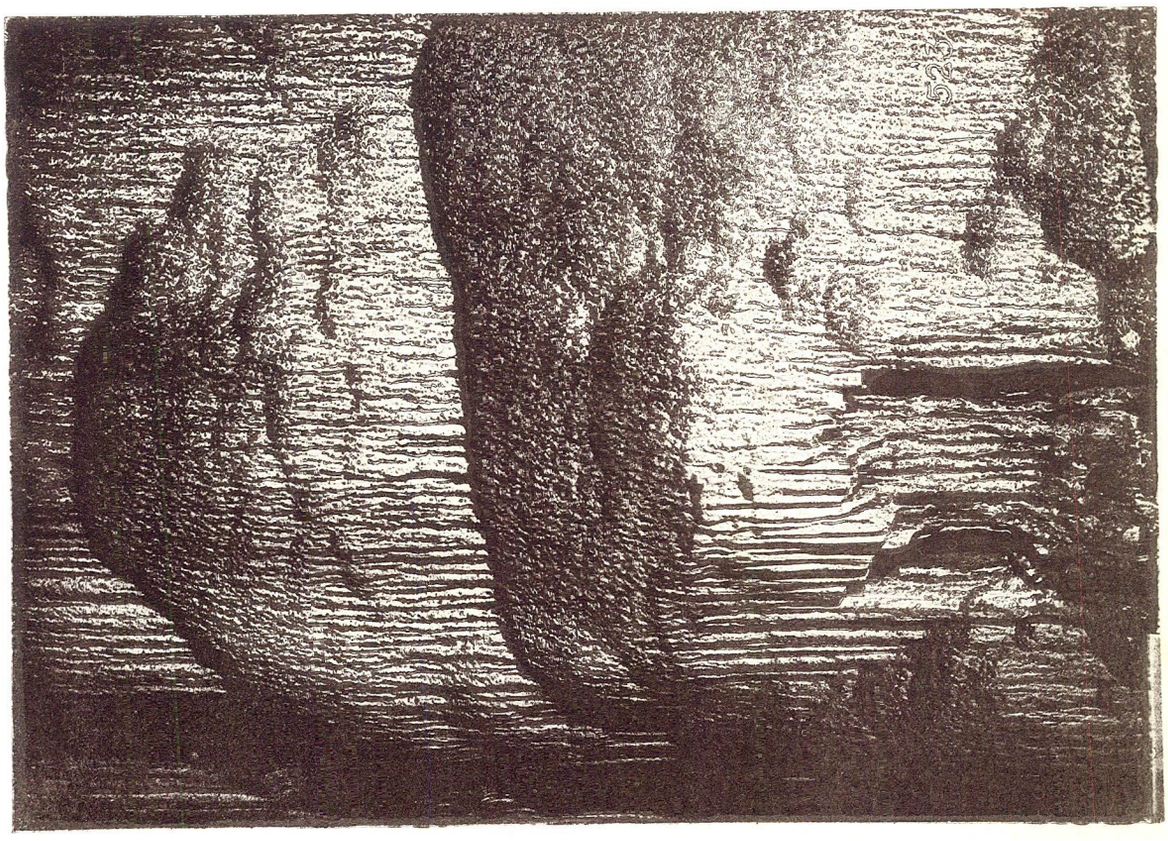



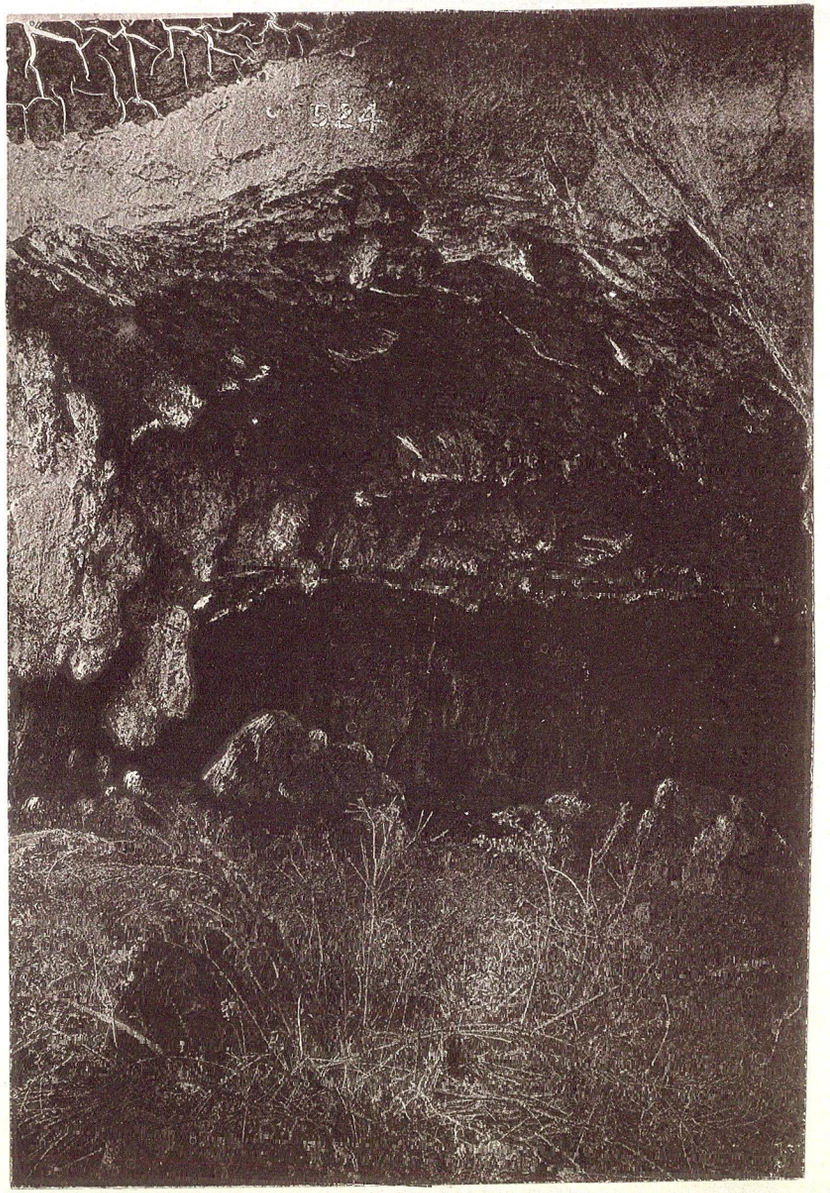
524



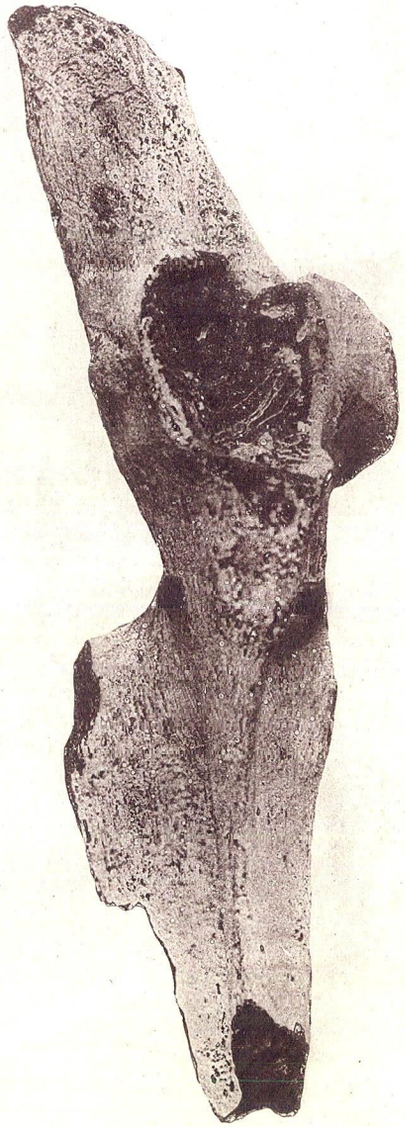

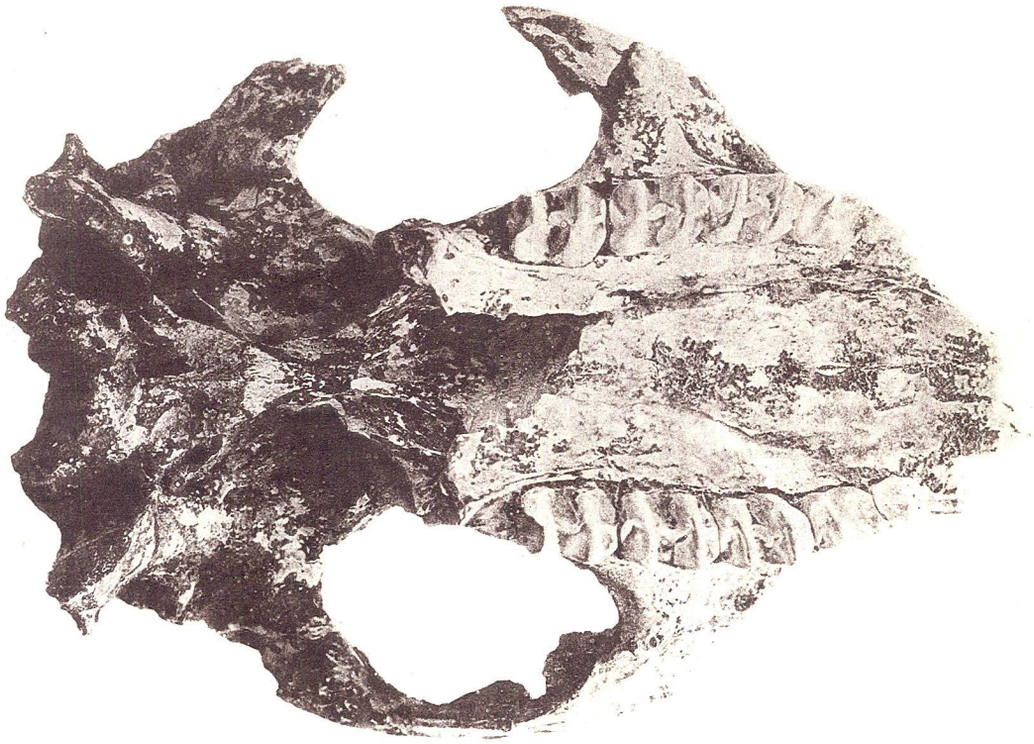



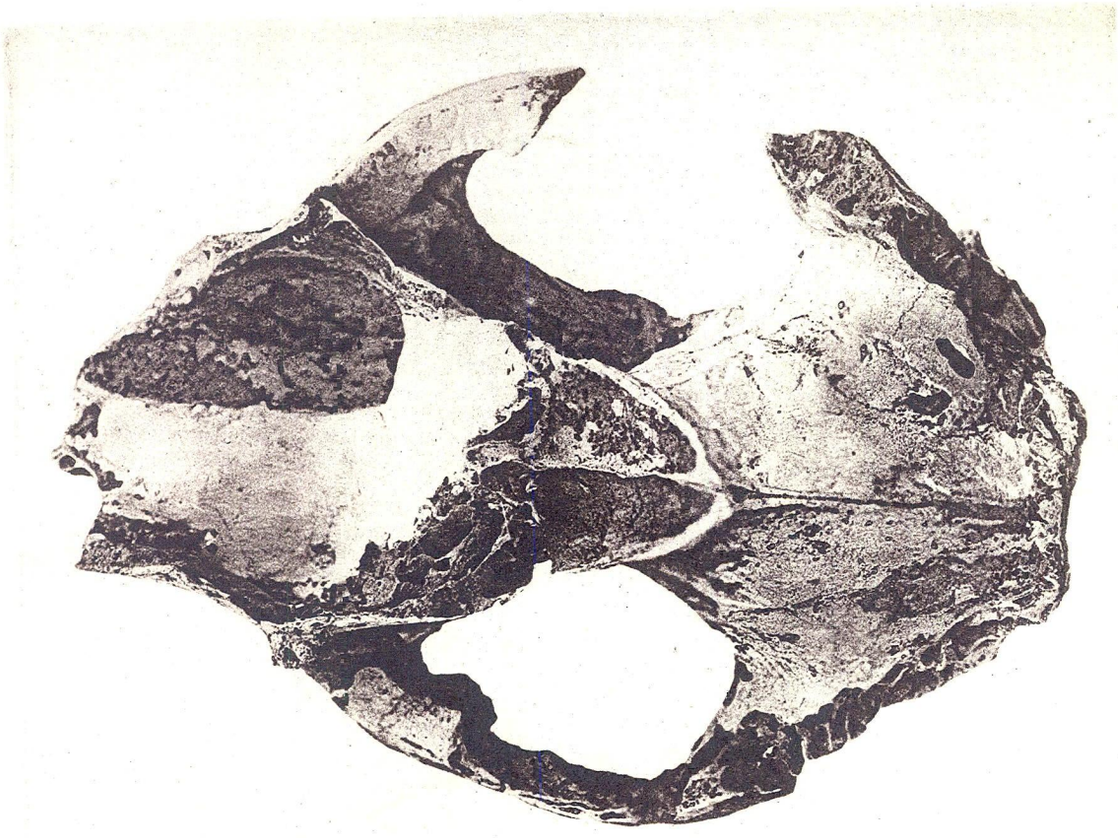

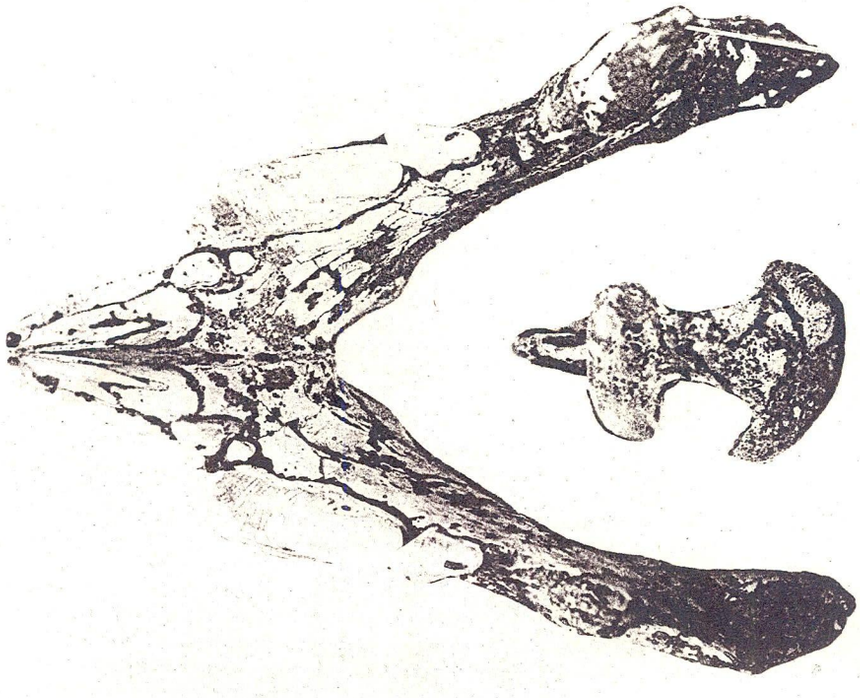

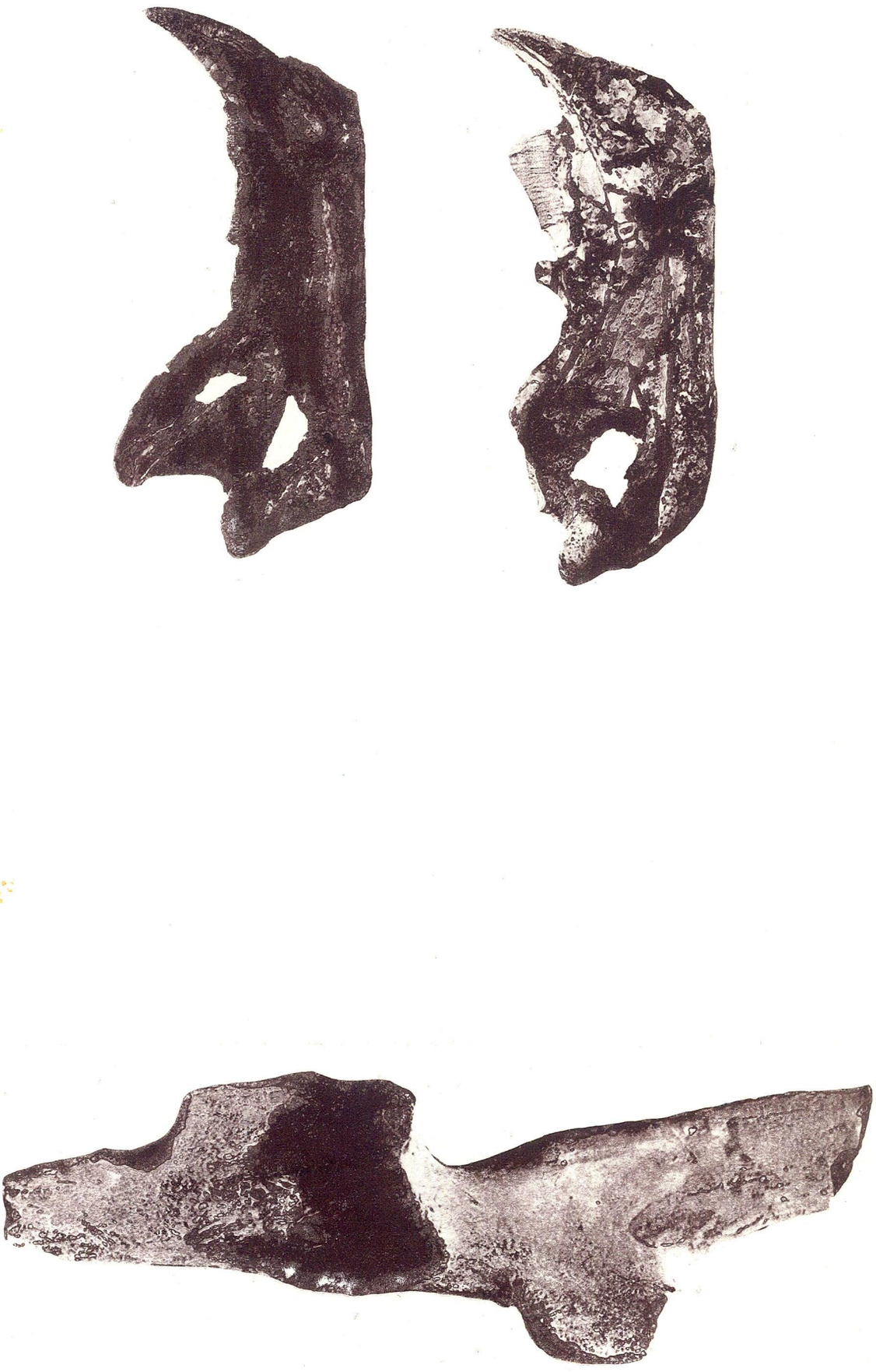







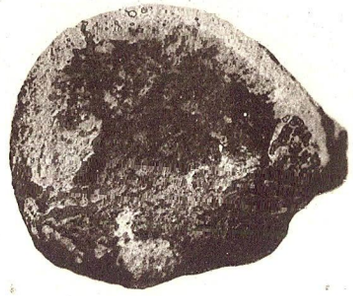

HEAD OR PROXIMAL END OF RADIUS
OF THYLACOLEO.





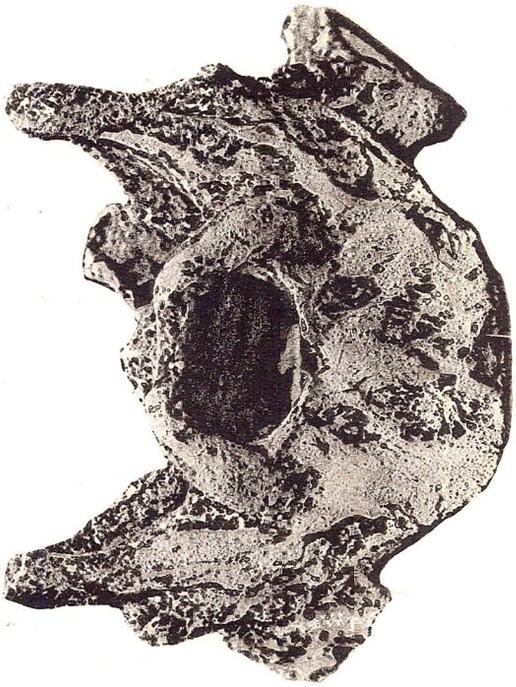

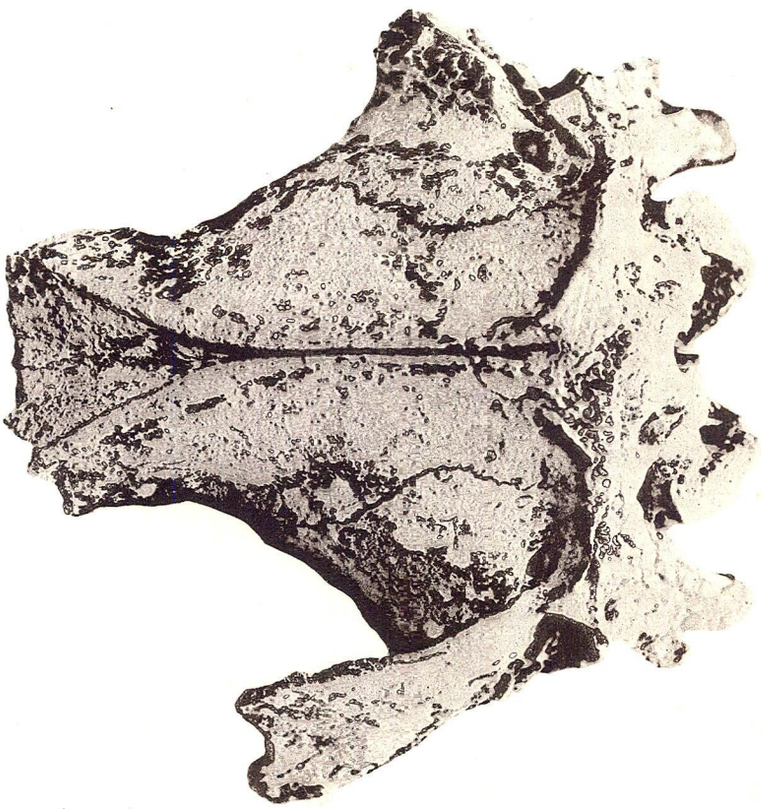



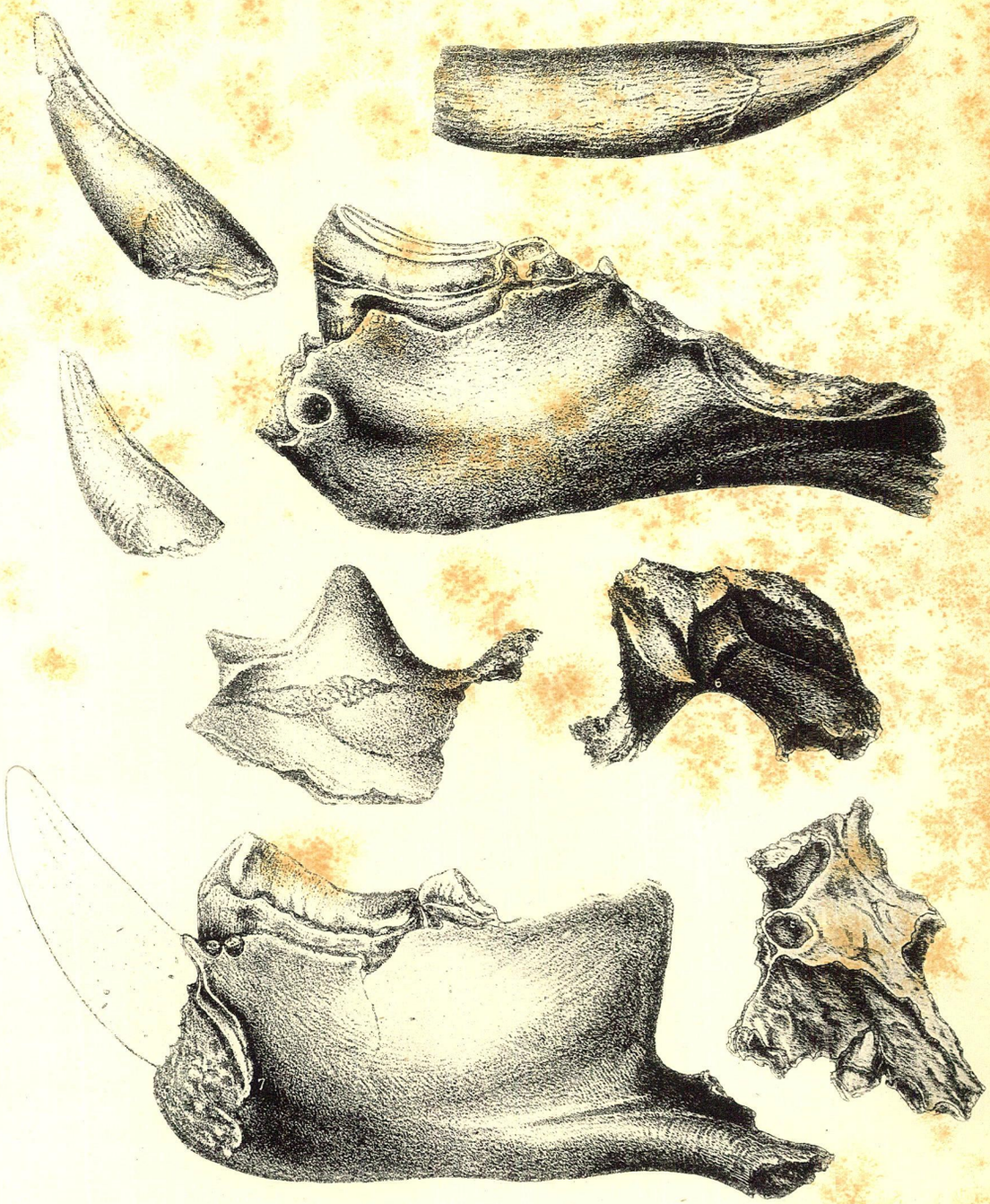



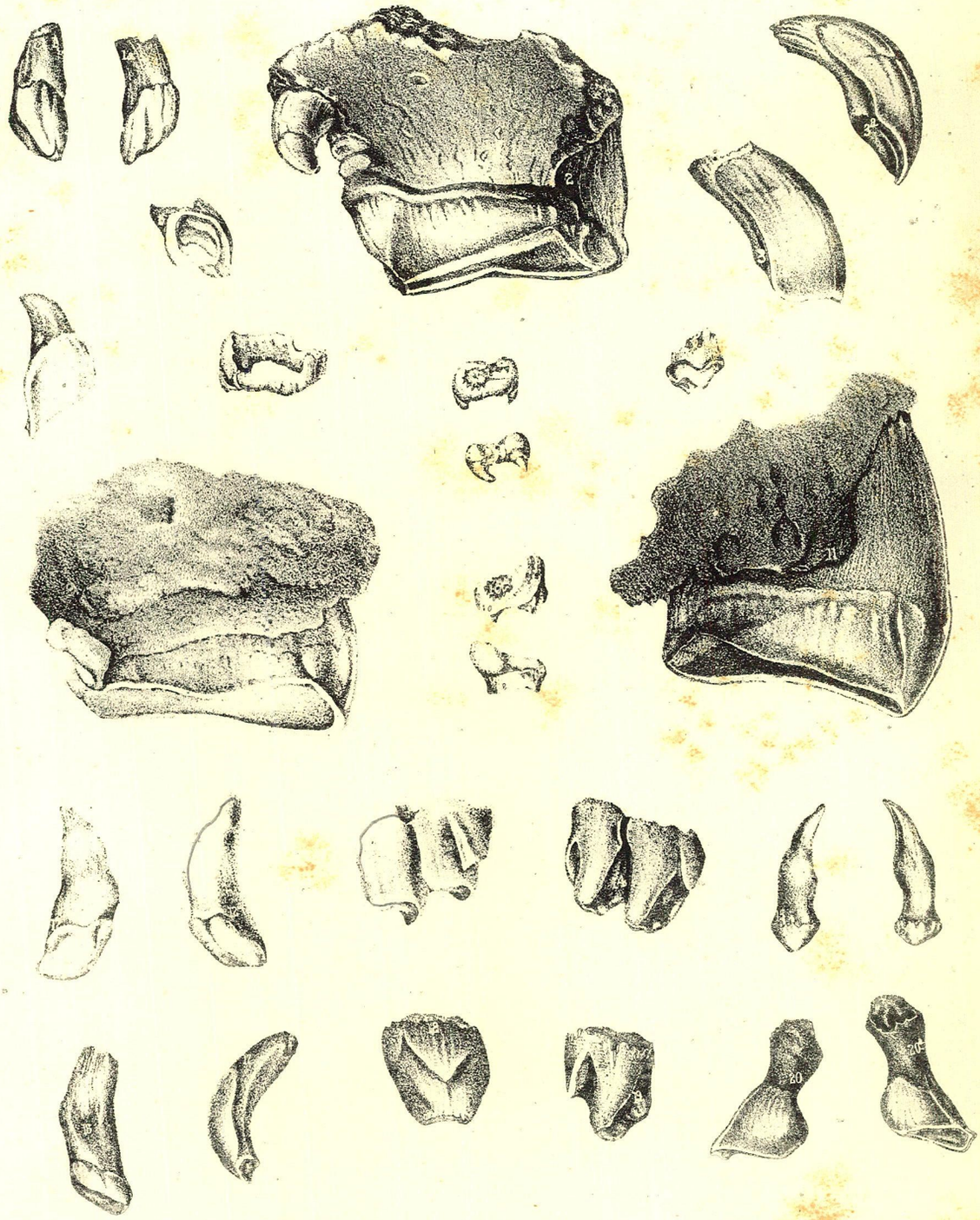

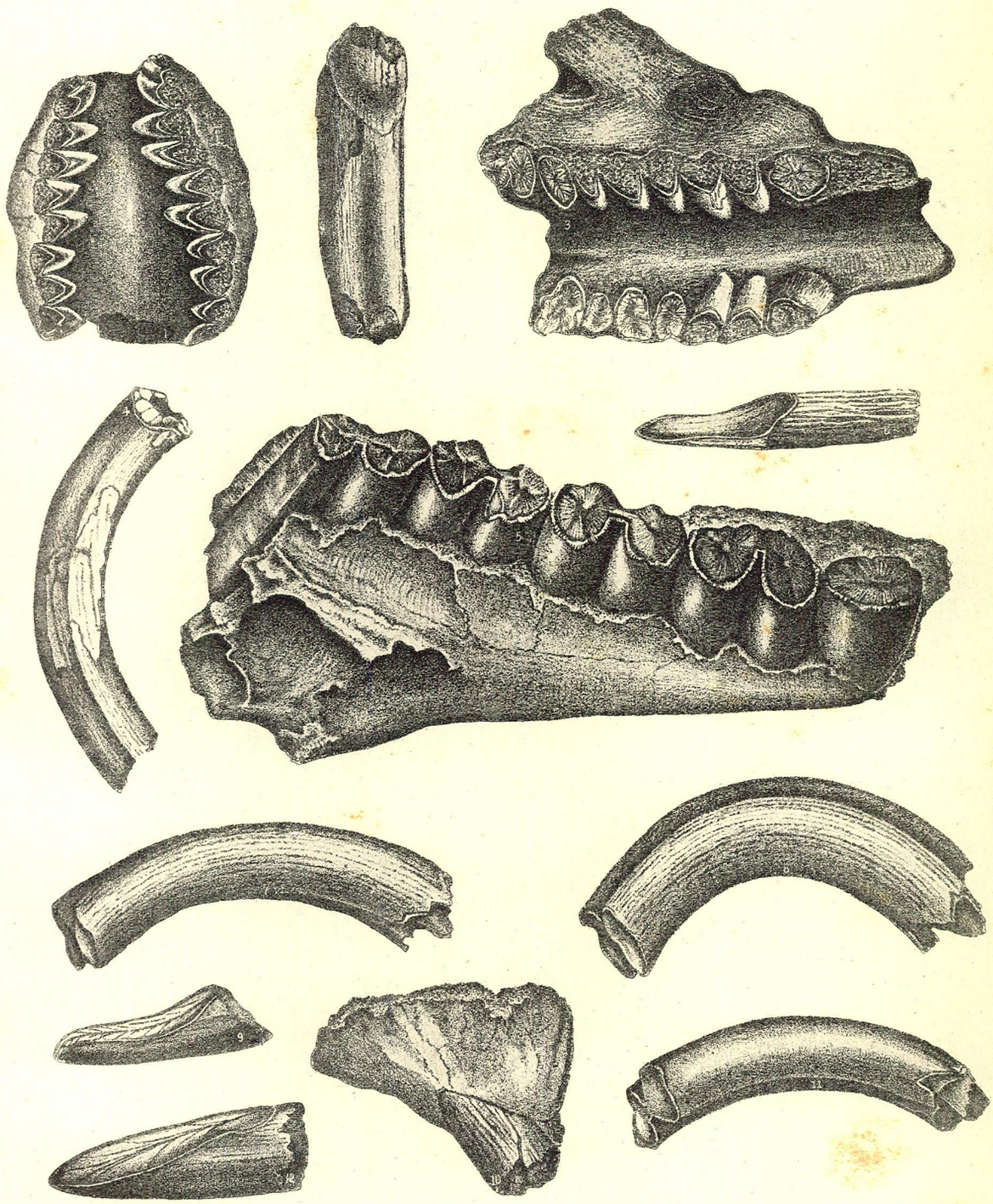

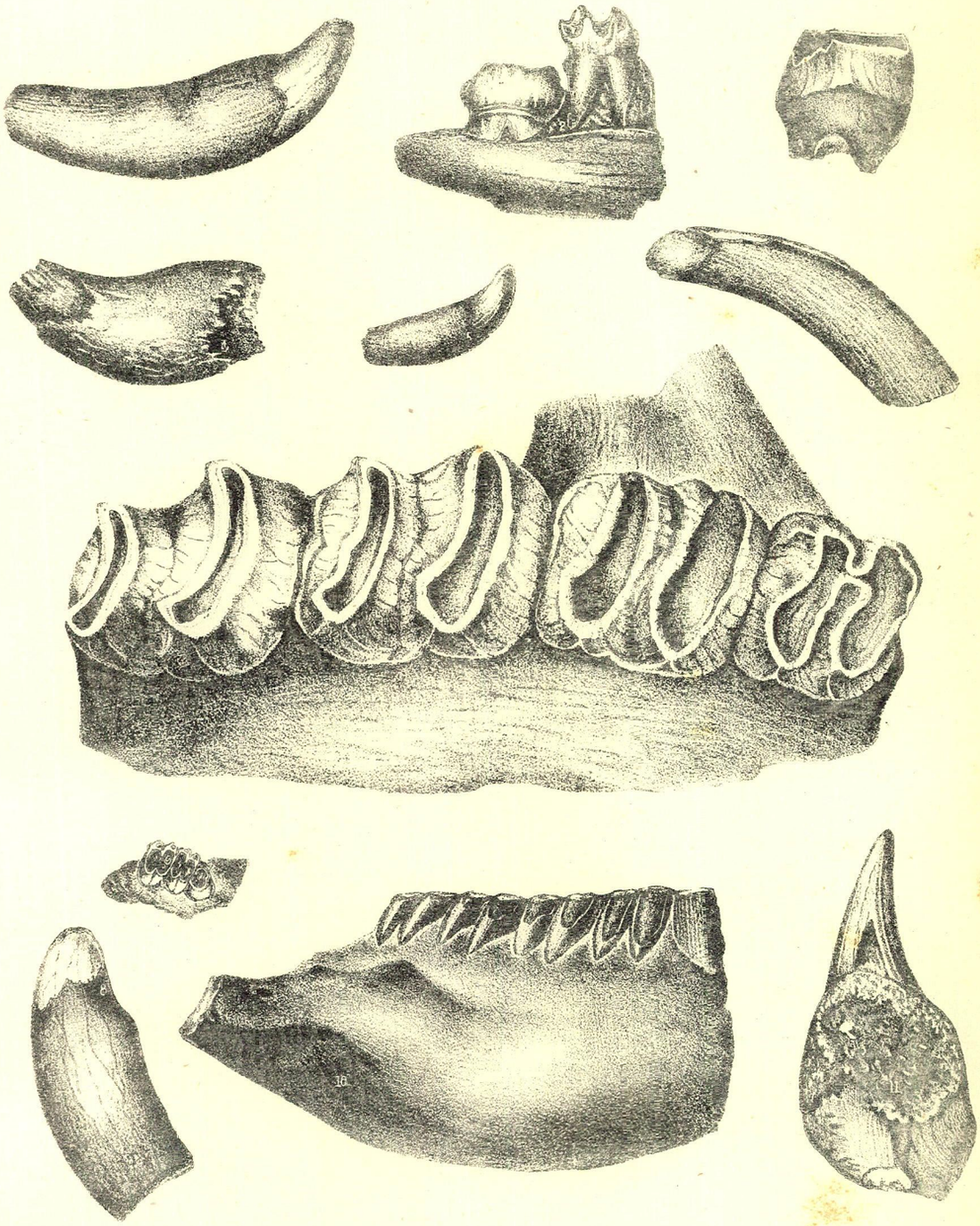

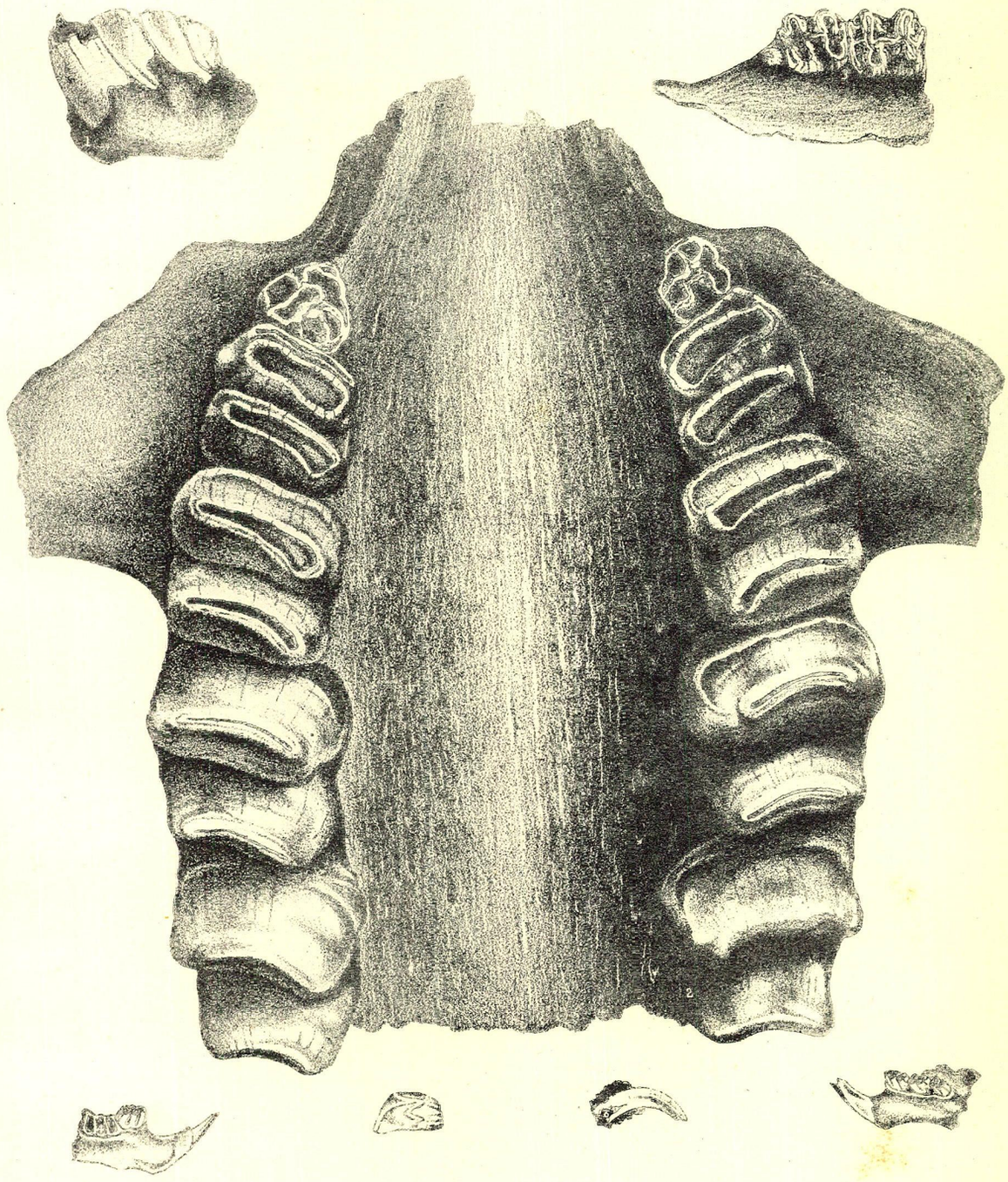

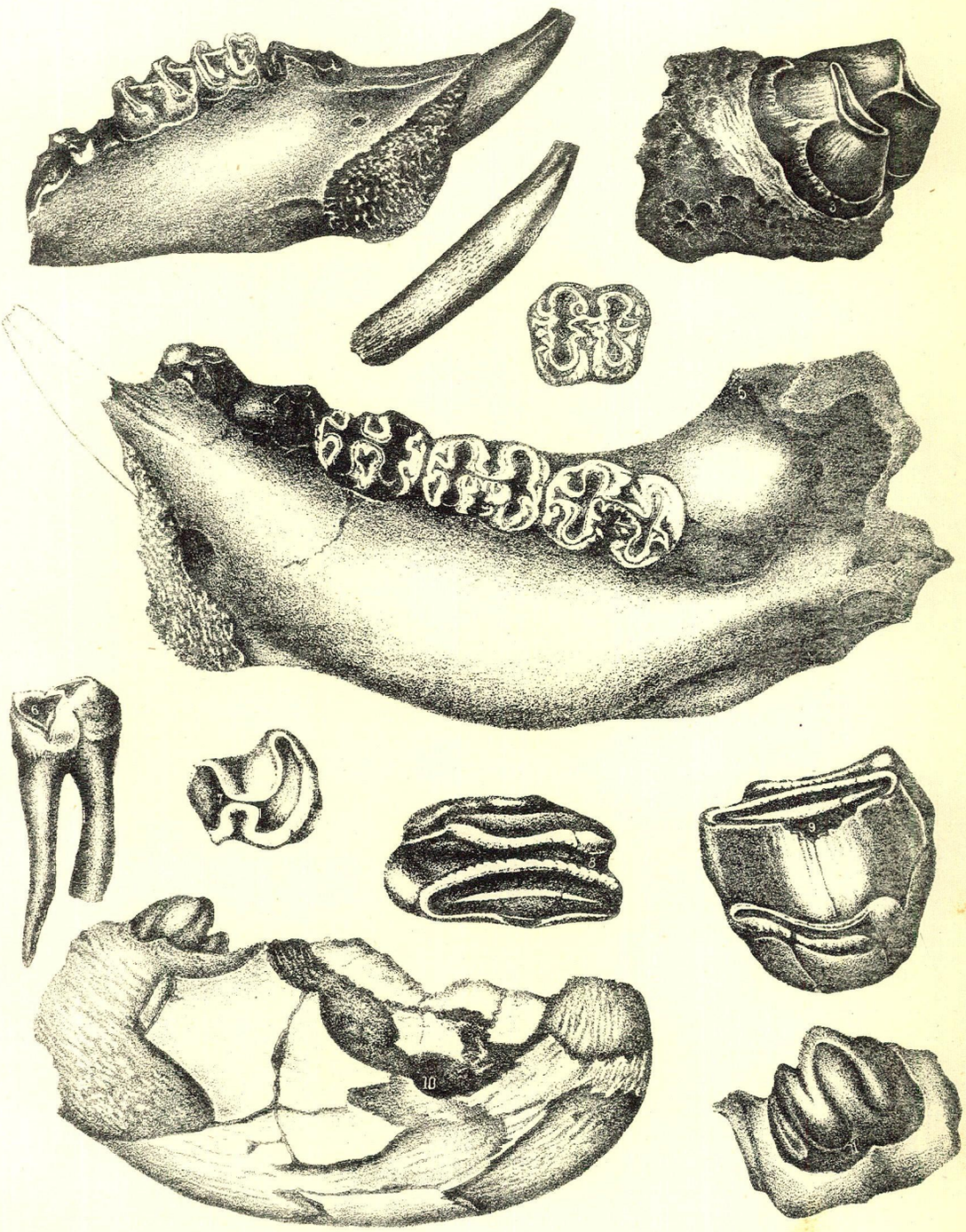
5
5
8
9
10
7

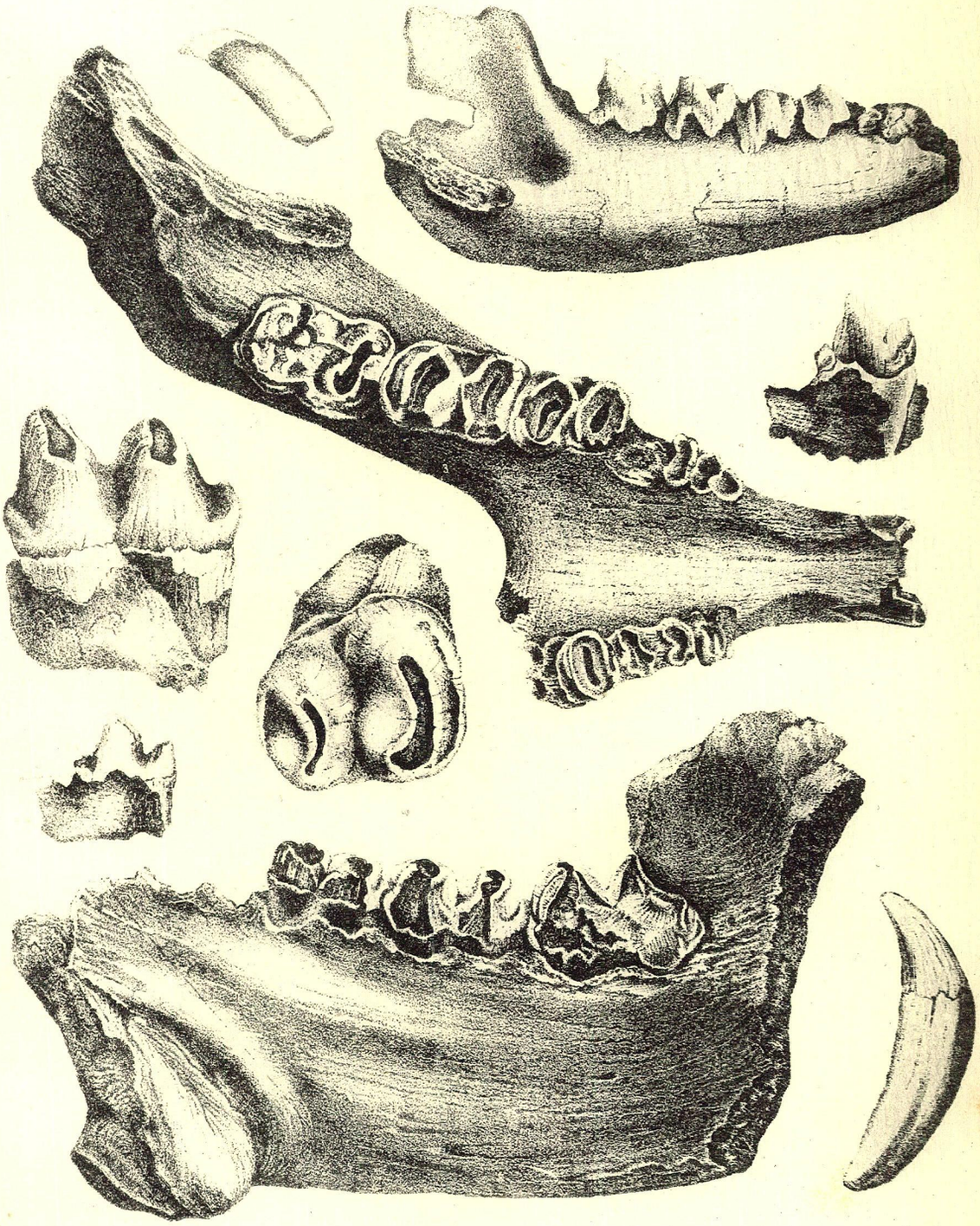

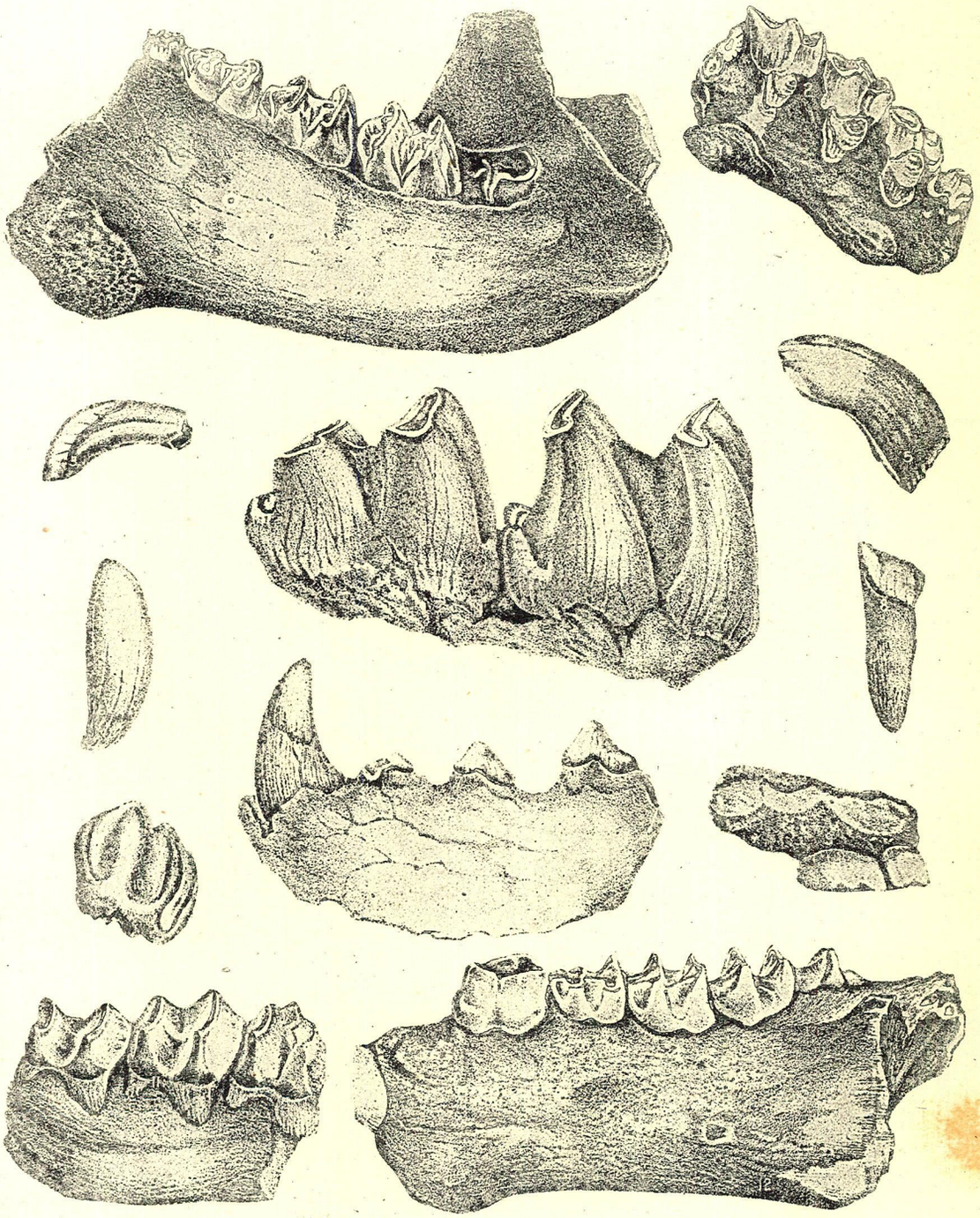

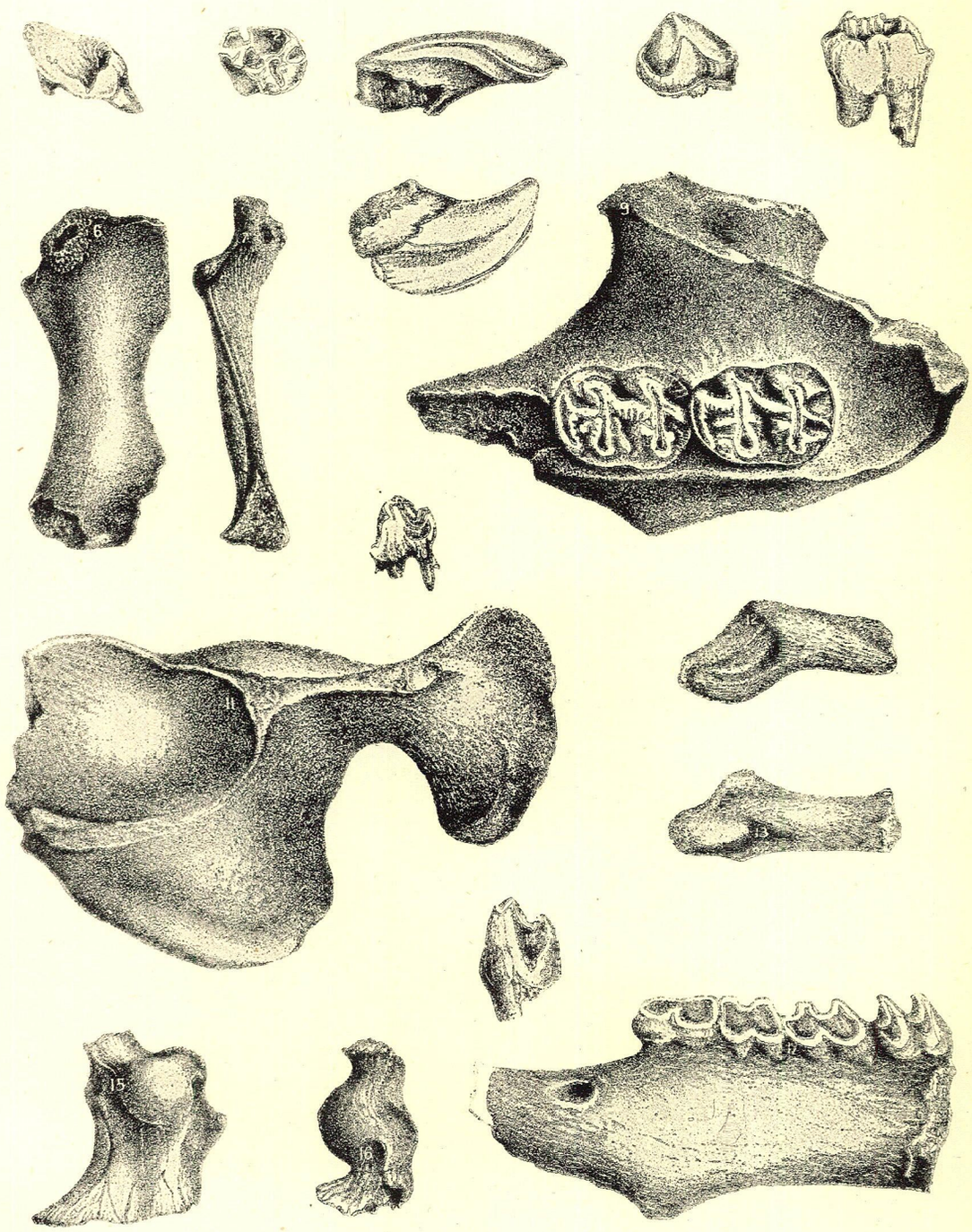
6
9
11
12
13
15
16

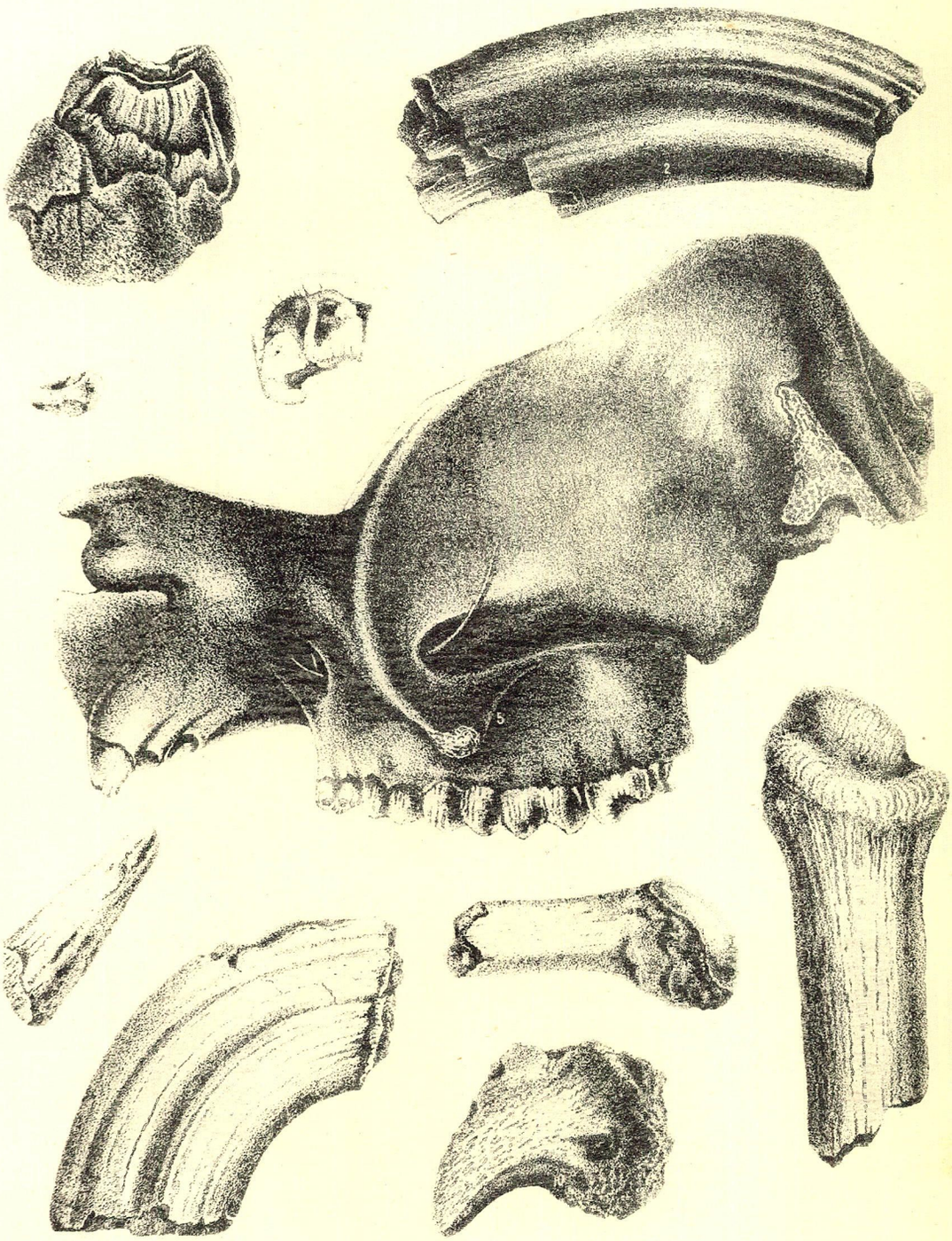

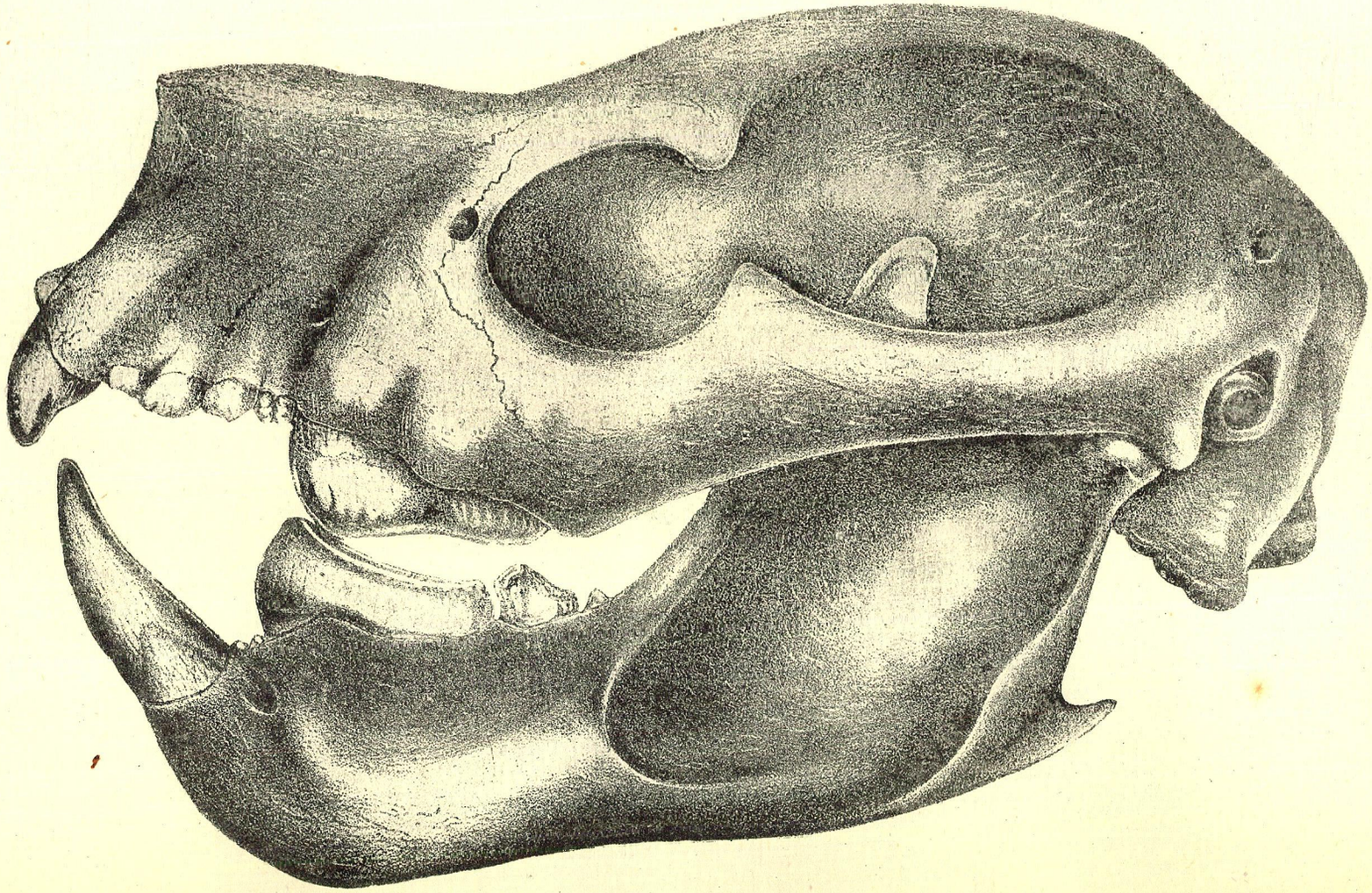

THYLACOLEO—SKULL AND JAW, RESTORED BY GERARD KREFFT.

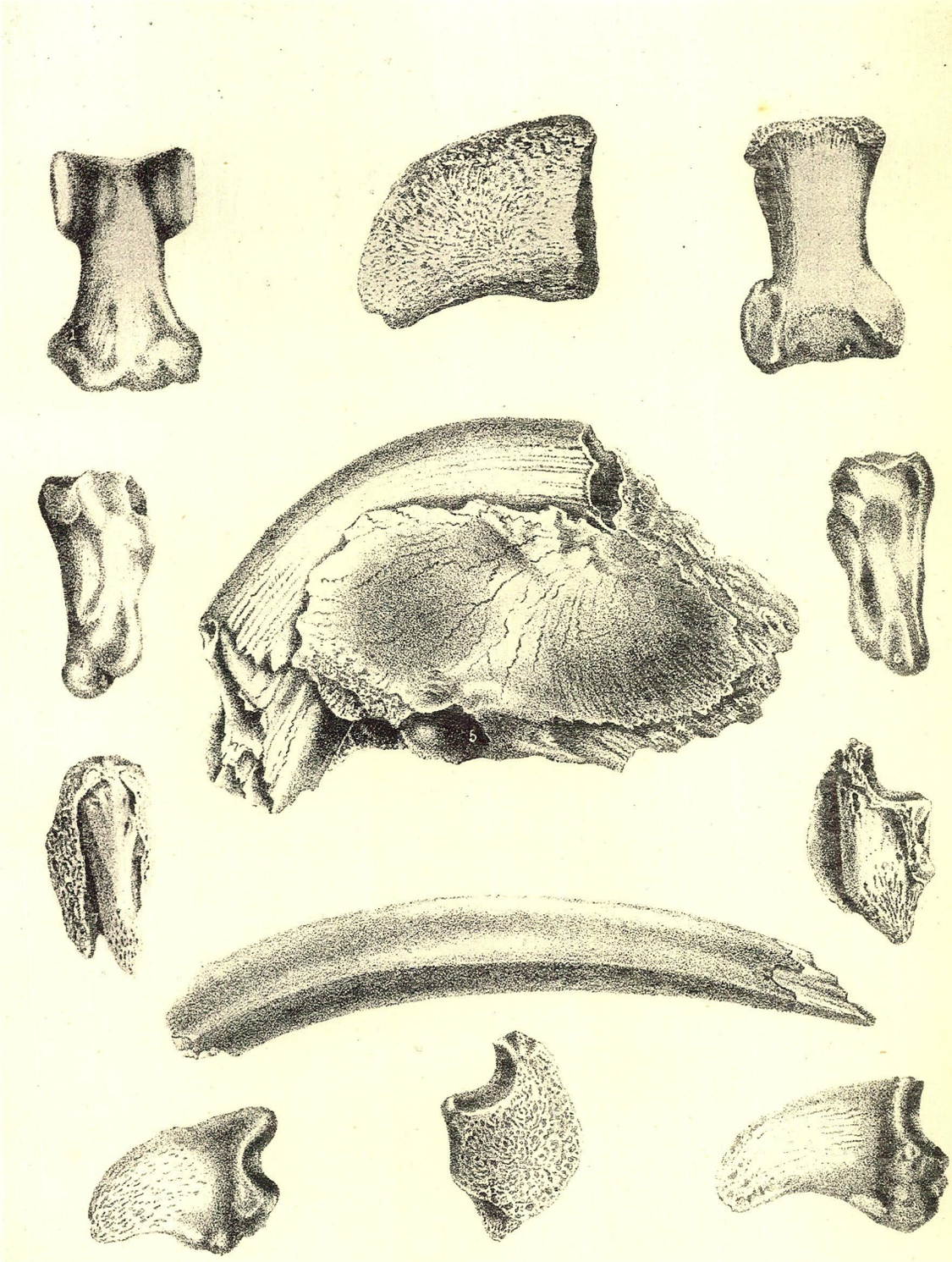

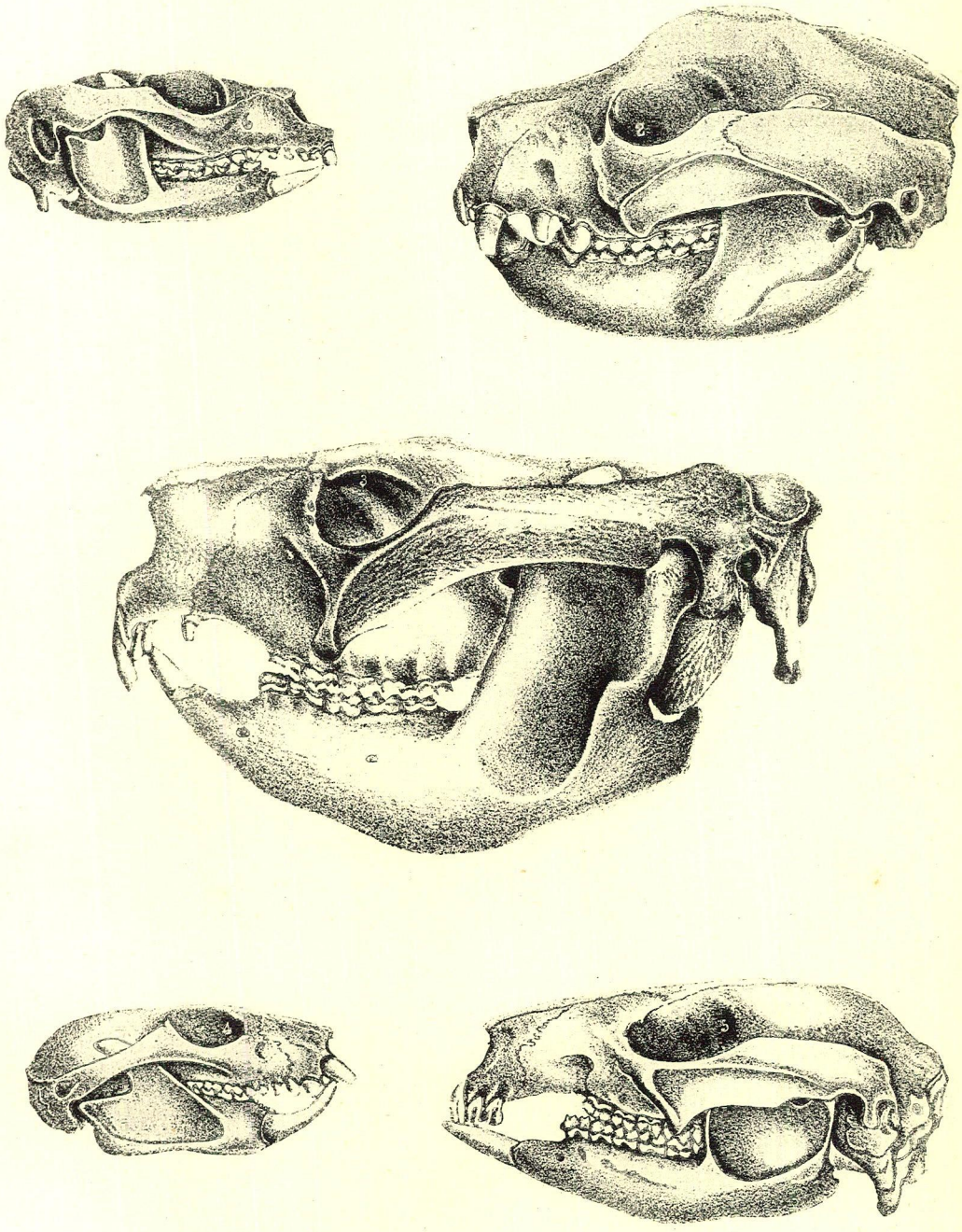

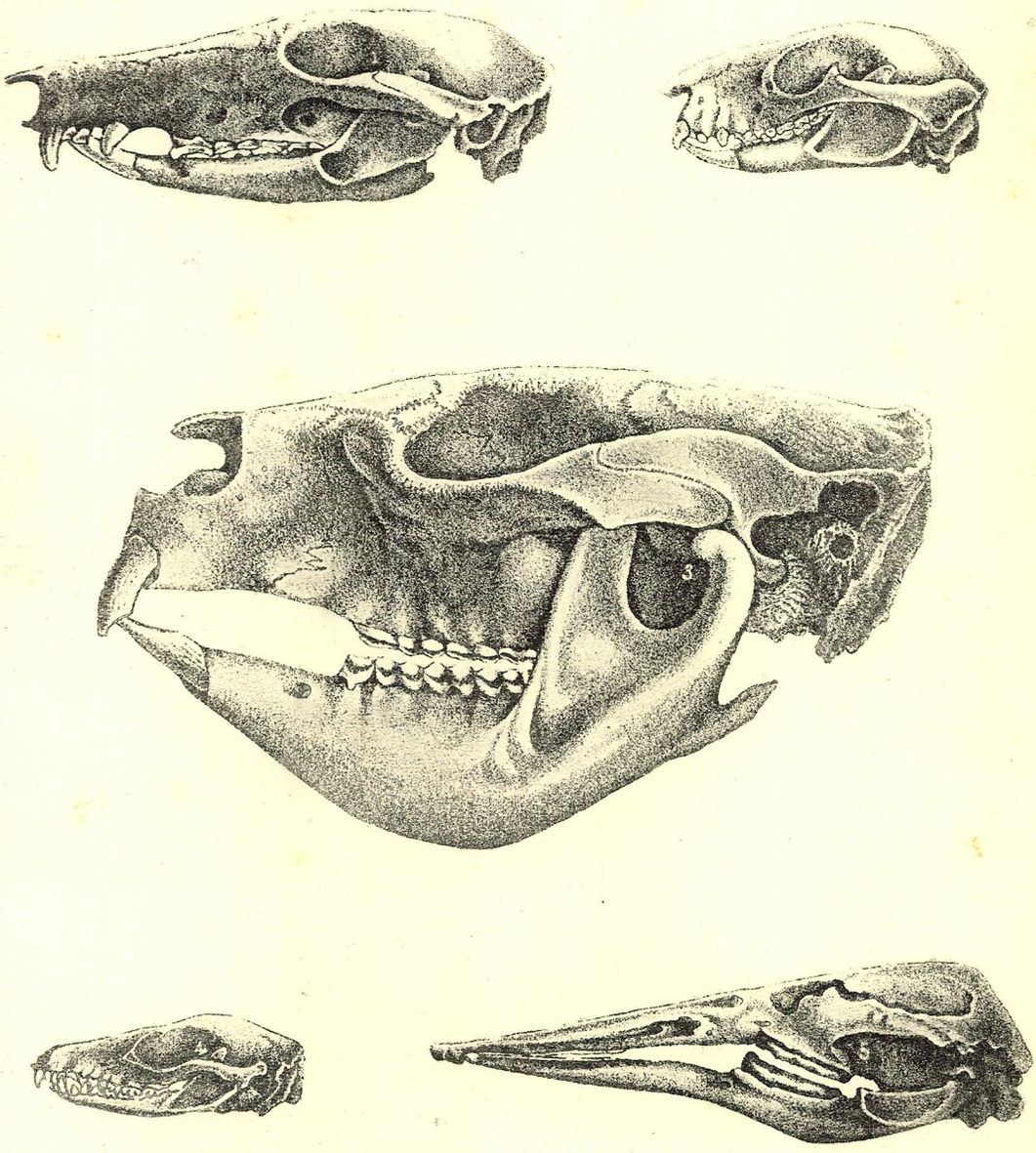

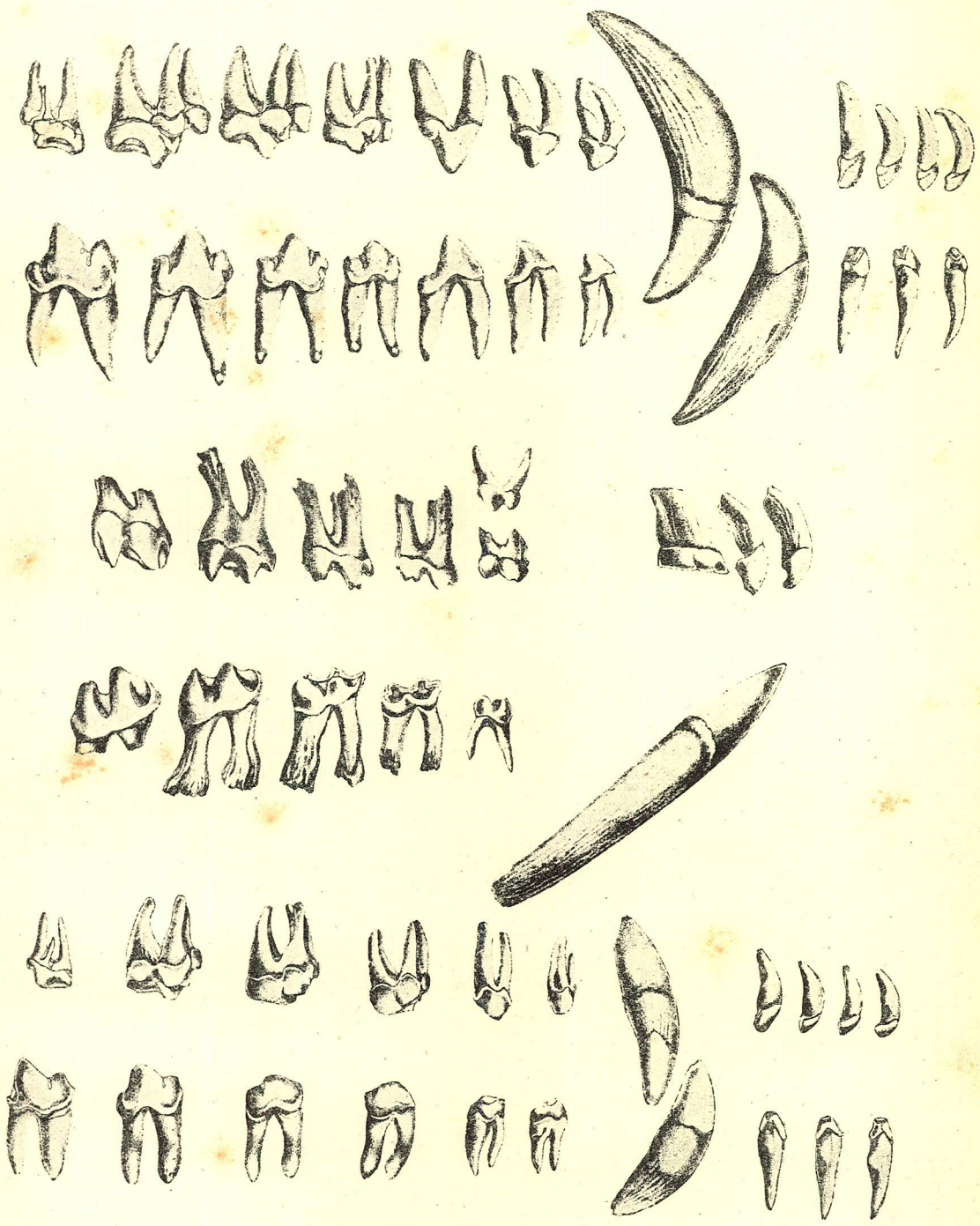

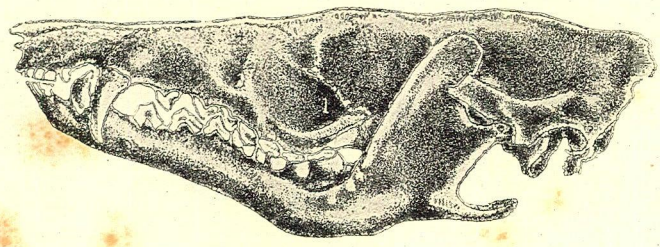

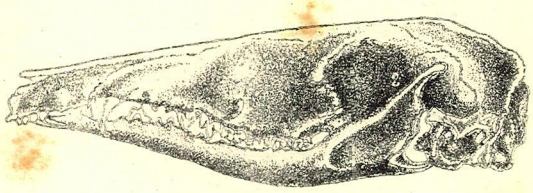

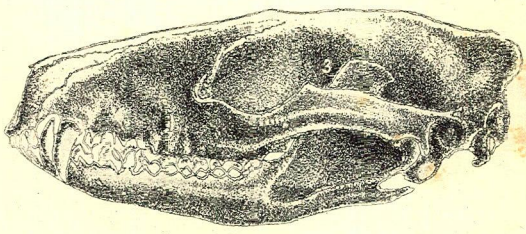

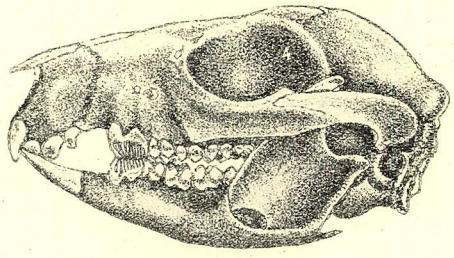

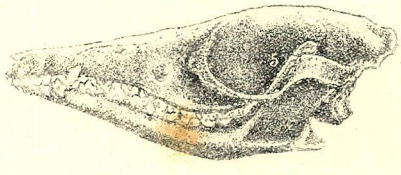

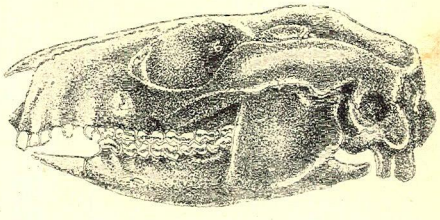



PHOTO-LITHOGRAPHED AT THE GOVT. PRINTING OFFICE,
SYDNEY, NEW SOUTH WALES.

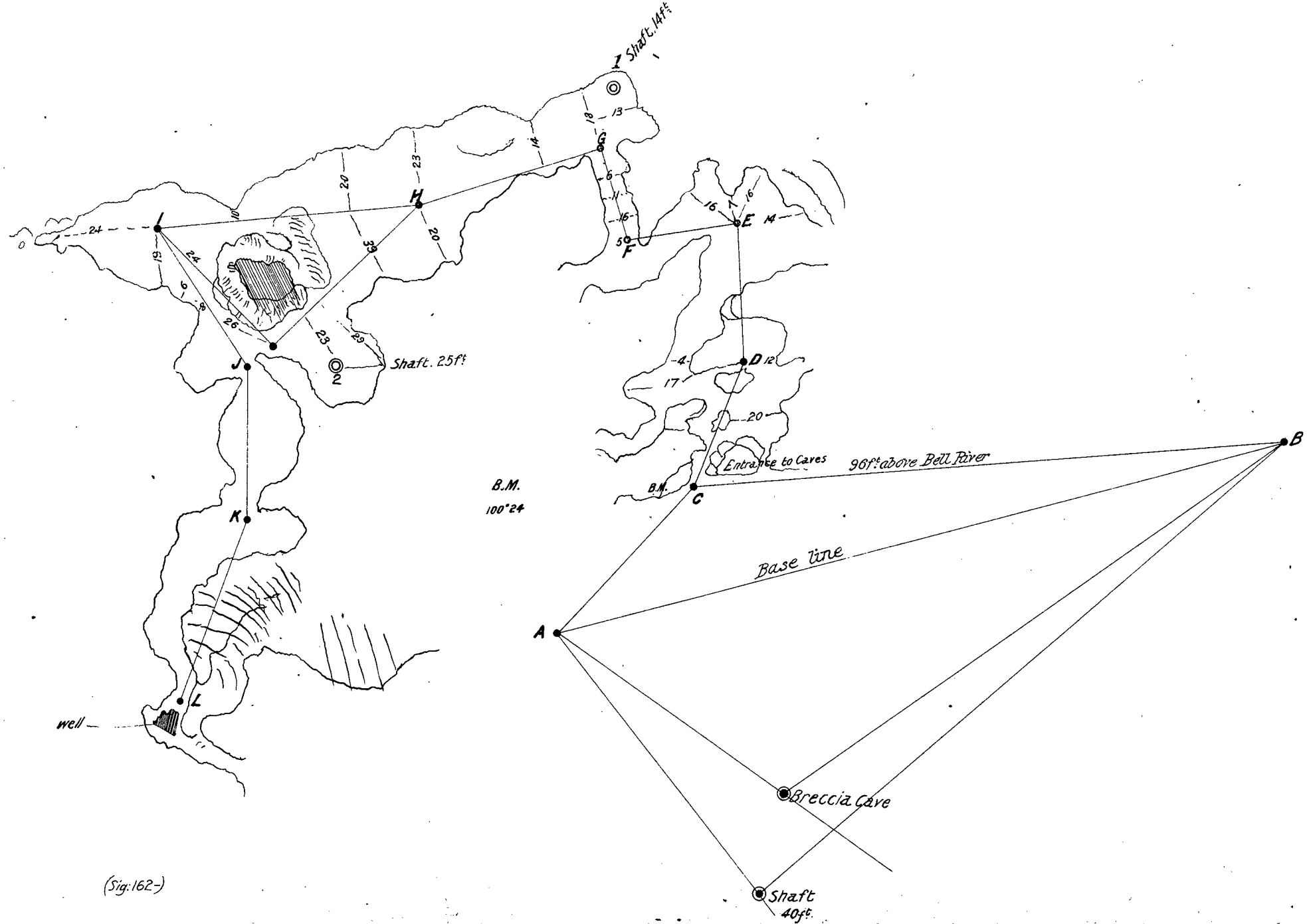

Shaft. 14ft
Shaft. 25ft
B.M.
100°24
Entrance to Caves
96ft above Bell River
Base line
Breccia Cave
Shaft
40ft
well

(Sig: 162-)

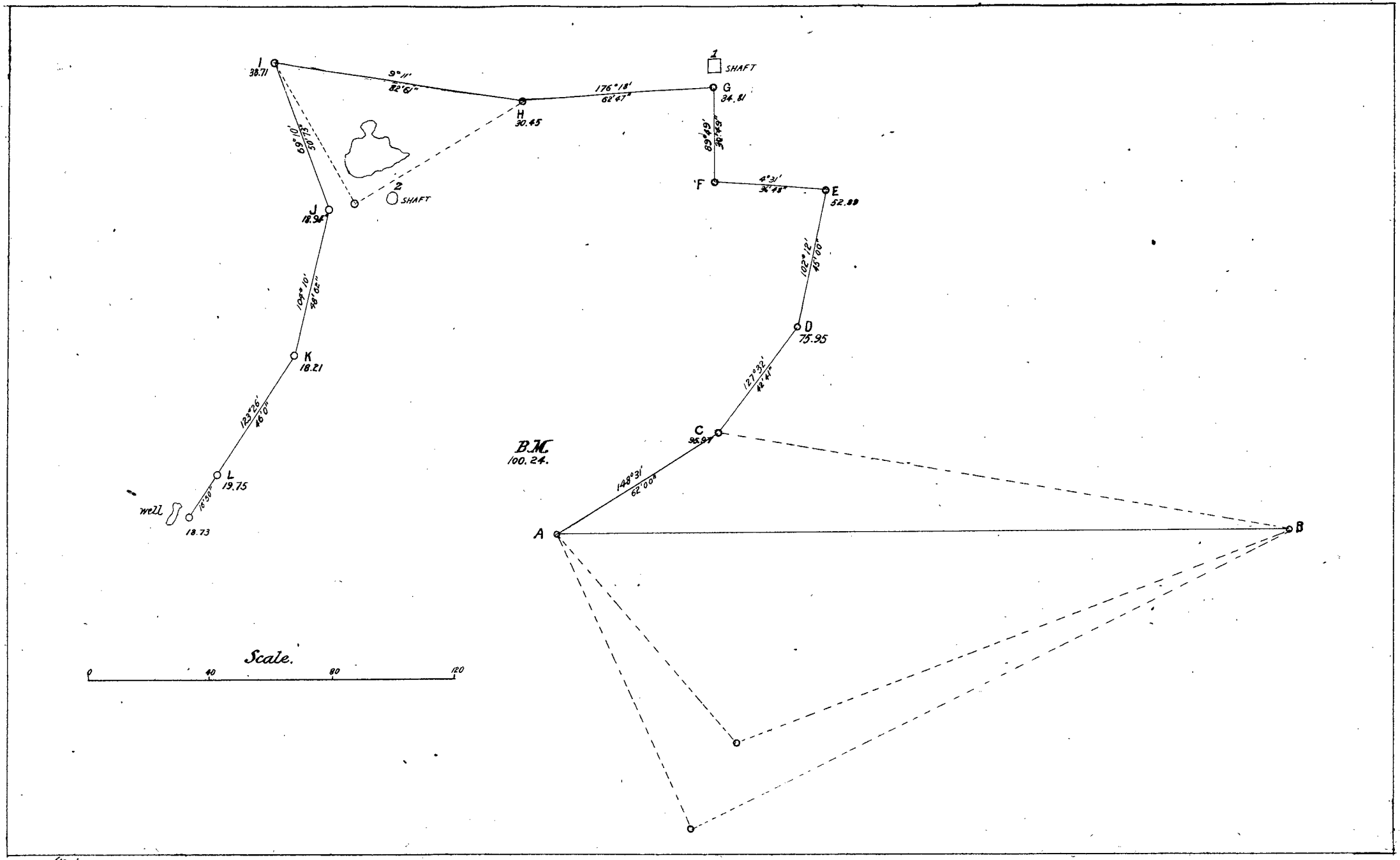
I
38.71
9°11'
82°61"
H
30.45
176°18'
62°47"
G
34.81
1
SHAFT
89°49'
36°49"
F
4°31'
36°48"
E
52.89
2
SHAFT
J
18.94
69°10'
50°13"
102°12'
45°00"
D
75.95
104°10'
48°02"
K
18.21
127°32'
48°41"
C
95.94
123°26'
46°0"
L
19.75
148°31'
62°00"
well
16°50"
18.73
B.M.
100.24.
A
B
Scale.
0
40
80
120

(162-)

DIAGRAM

showing plan of cave at Cave Flat

County of Harden

4 chains 86 links 247° west from East corner of Swifts 65 ac. C.P. Co.

Scale 20 ft to 1 centimetre.

0 10 20 30 40 50 60 70 80 90 100

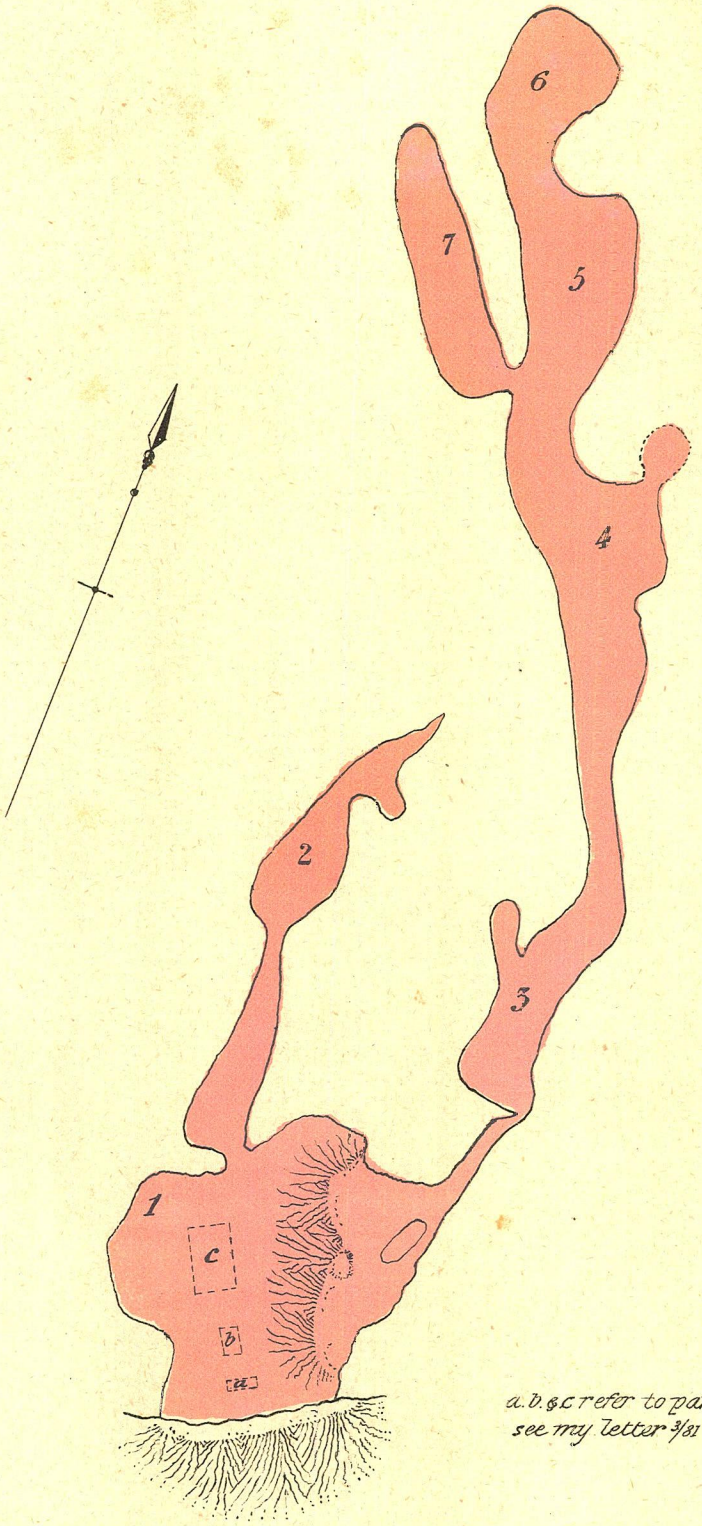

a. b. & c refer to parts excarated
see my letter 3/81 Septr 2nd /81.

(Sig/152-)

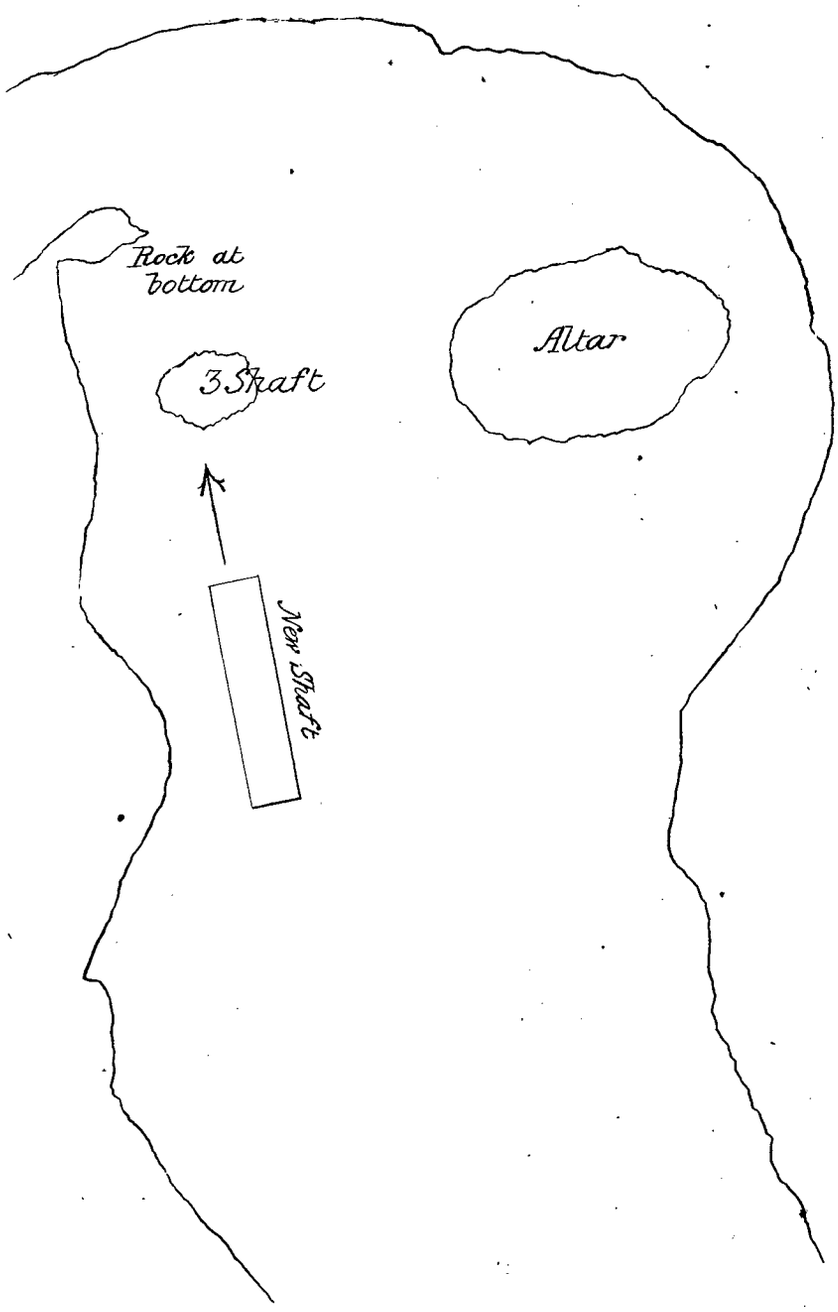

(Sig: 162-)